POST SIZE	BASE CONNECTION DATA											FUSE PLATE DATA										
	BOLT SIZE	BOLT TORQUE (INCH/LBS)	A	B	C	D	E	t_1	t_2	W	R	F	G		J	K	M	d_1	d_2	t_3	BOLT SIZE	WT. OF EACH FUSE PLATE LBS.
W 6X9	5/8" x 2 3/4"	450"-680"	5"	2"	1 1/4"	2 3/4"	1 1/8"	3/4"	1/2"	1/4"	11/32"	4 1/4"	2"		4"	2 1/4"	1"	9/16"	3/4"	1/4"	1/2" x 1 1/2"	1.01
W 6X12																						
W 6X15												5"	2 1/2"		6"	3 1/2"	1 1/2"	11/16"	1 1/4"	3/8"	5/8" x 2 1/4"	2.51
W 8X18	3/4" x 3 1/2"	750"-1050"	6"	2 1/4"	1 3/8"	3 1/2"	1 1/4"	1"	3/4"	5/16"	11/32"	5"	2 1/2"		5 1/4"	2 3/4"	1 1/4"	13/16"	1 1/16"	3/8"	3/4" x 2 1/4"	2.26
W 8X21												5 1/2"	2 1/2"		5 1/4"	2 3/4"	1 1/4"	13/16"	1"	1/2"	3/4" x 2 1/4"	3.35
W 10X22												6"	3"		5 3/4"	2 3/4"	1 3/8"	13/16"	1 1/8"	1/2"	3/4" x 2 1/4"	4.03
W 10X26																						
W 12X26												6"	3"		6 1/2"	3 1/2"	1 5/8"	13/16"	1 5/16"	1/2"	3/4" x 2 1/4"	4.47

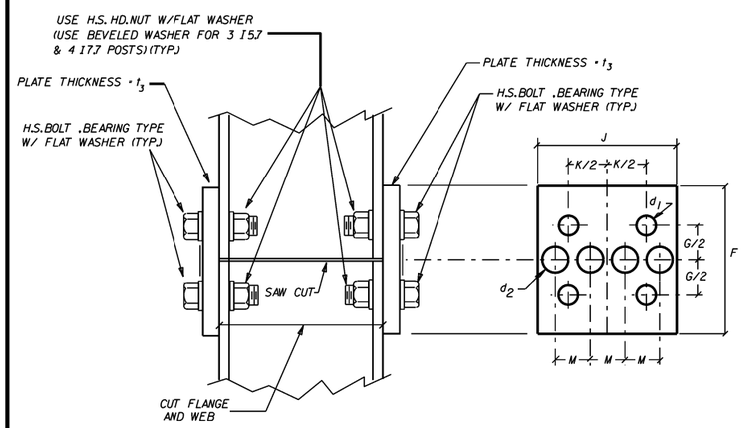

NOTE: USE H.S.HEX HEAD BOLTS,HEX HEAD NUTS AND BEVEL OR FLAT WASHERS (WHERE REQ.) UNDER NUTS. ALL HOLES SHALL BE DRILLED.ALL PLATE CUTS SHALL PREFERABLY BE SAW CUTS.HOWEVER FLAME CUTTING WILL BE PERMITTED PROVIDED ALL EDGES ARE GROUND.METAL PROJECTING BEYOND THE PLANE OF THE PLATE FACE WILL NOT BE PERMITTED. STEEL FUSE PLATES SHALL CONFORM TO THE REQUIREMENTS OF ASTM-A36,ASTM-A441,ASTM-572 GRADE 50,OR ASTM-A588 MAY BE SUBSTITUTED FOR A36 AT THE OPTION OF THE FABRICATOR. STEEL USED SHALL HAVE AN ULTIMATE TENSILE STRENGTH NOT TO EXCEED 80 KSI.

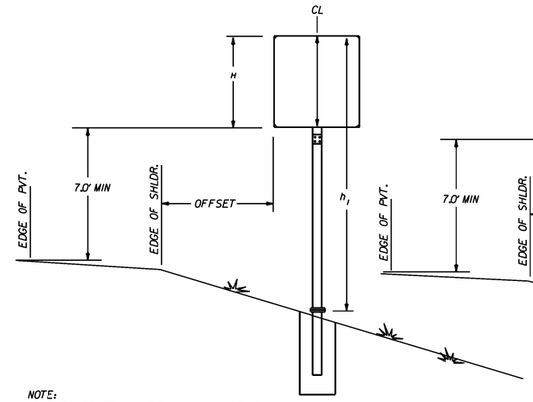

NOTE:
THE OFFSET WILL BE A MINIMUM OF 10' FROM THE EDGE OF PAVED SURFACE OR AS DIRECTED BY THE ENGINEER

G-1

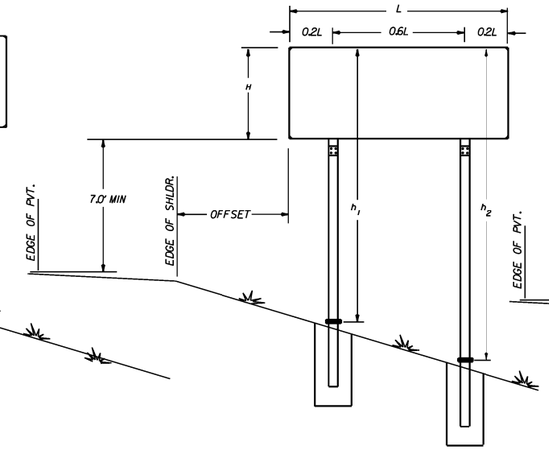

G-2

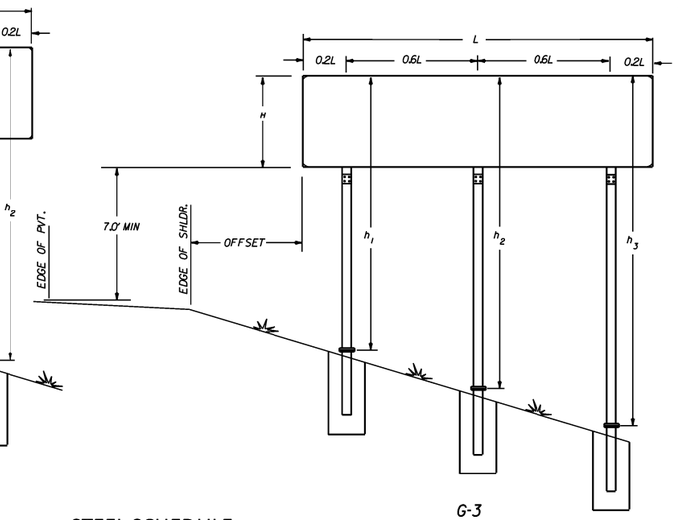

G-3

NOTE: SECTIONS SHOWN ARE FOR INSTALLATION ON THE RIGHT SHOULDER AND IN THE GORE. BOLT HOLES IN BASE PLATE ARE SLOTTED AND BEVELED AS SHOWN. USE H.S.BOLTS WITH HEX HD.,HEX NUT AND THREE FLAT WASHERS FOR EACH BOLT.SEE TABLE FOR BOLT DIA. AND TORQUE.
NOTE: ASSEMBLE SIGN POST TO STUB POST USING THE BOLTS SPEC.IN THE TABLE AND AS SHOWN IN THE ELEVATION DETAILS.THERE SHALL BE THREE FLAT WASHERS ON EACH BOLT LOCATED AS SHOWN IN THE ELEVATIONS. USE A SHIM TO PLUMB THE SIGN POST,THEN TIGHTEN THE BOLTS USING A 12" TO 15" WRENCH UNTIL THE WASHERS AND SHIMS ARE SEATED AND THE BOLT THREADS ARE CLEAR ,THEN LOOSEN EACH BOLT IN TURN AND RETIGHTEN IN A SYSTEMATIC ORDER TO THE PRESCRIBED TORQUE (SEE TABLE).THE BURR THREADS ADJACENT TO THE BACK SIDE OF THE NUT TO PREVENT LOOSENING.

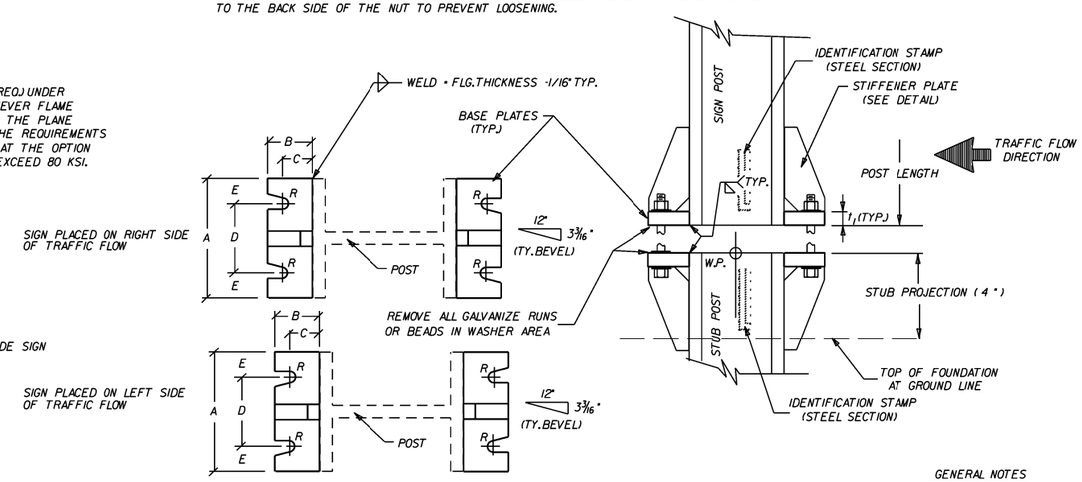

STEEL SCHEDULE

FOOTING DIAMETER	#3 TIE BARS		
	DIAMETER	BAR LENGTH	POUNDS
INCHES	INCHES	FEET	
18	12	4.39	1.65
24	18	5.96	2.24
30	24	7.53	2.83
36	30	9.1	3.42

FOOTINIG DEPTH	#6 STRAIGHT BARS		
	BAR LENGTH	NUMBER REQ'D.	POUNDS
FEET	FEET		
2.50	2.00	8	24.03
3.00	2.50	8	30.04
3.50	3.00	8	36.05
4.00	3.50	8	42.06
4.50	4.00	8	48.06
5.00	4.50	8	54.07
5.50	5.00	8	60.08
6.00	5.50	8	66.09
6.50	6.00	8	72.10
7.00	6.50	8	78.10
7.50	7.00	8	84.11
8.00	7.50	8	90.12

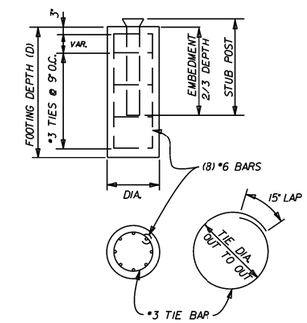

NOTE: BOLT HOLES,USED IN THE MOUNTING OF STANDARD SIGNS SHALL BE LOCATED IN THE FLANGE ADJACENT TO THE NEAR EDGE OF PAVEMENT FOR SINGLE POST ASSEMBLIES AND IN THE OUTSIDE FLANGES FOR MULTIPLE POST ASSEMBLIES.

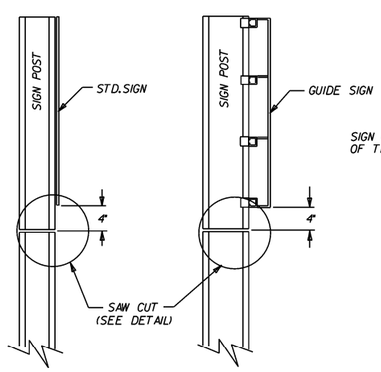

NOTE: POST SHALL BE SAW CUT AFTER GALVANIZING AND THE CUT SURFACE TREATED.AFTER PLATE IS INSTALLED AND ALL BOLTS FULLY TIGHTENED,WITH AN APPROVED ZINC SOLDER MEETING THE FEDERAL SPEC.O-G-93 (STICK ONLY).

STANDARD SIGNS

GUIDE SIGNS

FUSE PLATE DETAILS

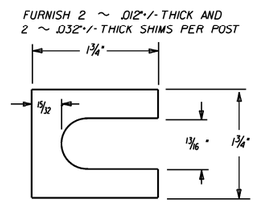

SHIM DETAIL

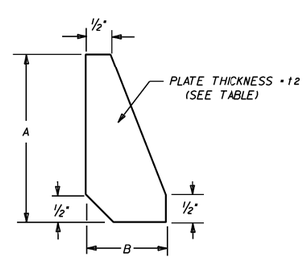

STIFFENER PLATE DETAIL

GENERAL NOTES

TIGHTEN THE HIGH STRENGTH BOLTS IN THE BASE CONNECTION ONLY TO THE TORQUE SHOWN. DO NOT OVERTIGHTEN.

BASE PLATES AND STIFFENER PLATES SHALL BE OF THE SAME MATERIAL AS THE PRIMARY SUPPORT POSTS WHICH THEY ARE WELDED.

REFER TO THE PLANS FOR FOOTING DIMENSIONS.

EACH STUB POST AND SIGN POST SHALL HAVE A PERMANENT IDENTIFYING STAMP WHICH SPECIFIES THE STEEL SECTION USED. IF THE CONTRACTOR ELECTS TO SHIP THE STUB POST SEPARATE FROM THE SIGN POST A MATCH MARK SYSTEM WILL BE REQUIRED.

FOOTING QUANTITIES

FOOTINIG DEPTH	NUMBER TIE BARS REQ'D	18" DIAMETER		24" DIAMETER		30" DIAMETER		36" DIAMETER	
		CLASS S CONCRETE	REINF STEEL	CLASS S CONCRETE	REINF STEEL	CLASS S CONCRETE	REINF STEEL	CLASS S CONCRETE	REINF STEEL
FEET		CU. YD.	(GRADE 60)	CU. YD.	(GRADE 60)	CU. YD.	(GRADE 60)	CU. YD.	(GRADE 60)
2.50	4	0.16	31						
3.00	4	0.20	37						
3.50	5	0.23	44						
4.00	6	0.26	52	0.47	56				
4.50	6	0.29	58	0.52	62				
5.00	7	0.33	66	0.58	70	0.91	74		
5.50	8			0.64	78	1.00	83		
6.00	8			0.70	84	1.09	89	1.57	93
6.50	9					1.18	98	1.70	103
7.00	10					1.27	106	1.83	112
7.50	10							1.96	118
8.00	11							2.09	128

SIGN POST AND STUB POST

DATE	REVISION	FILMED
9-12-13	ISSUED	

ARKANSAS STATE HIGHWAY COMMISSION

DETAIL OF BREAKAWAY SIGN SUPPORTS FOR GUIDE SIGNS

STANDARD DRAWING SHS-3