DATE REVISED	DATE REVISED	FED.RD. DIST.NO.	STATE	JOB NO.	SHEET NO.	TOTAL SHEETS
		6	ARK.	040781	1	115
		PRAIRIE CREEK STR. & APPRS. (HWY. 71) (S)				

ARKANSAS DEPARTMENT OF TRANSPORTATION
CONSTRUCTION PLANS FOR STATE HIGHWAY

PRAIRIE CREEK STR. & APPRS. (HWY. 71) (S)

SEBASTIAN COUNTY

ROUTE 71 SECTION 13

FEDERAL AID PROJ. BFP-0065(61)

JOB 040781

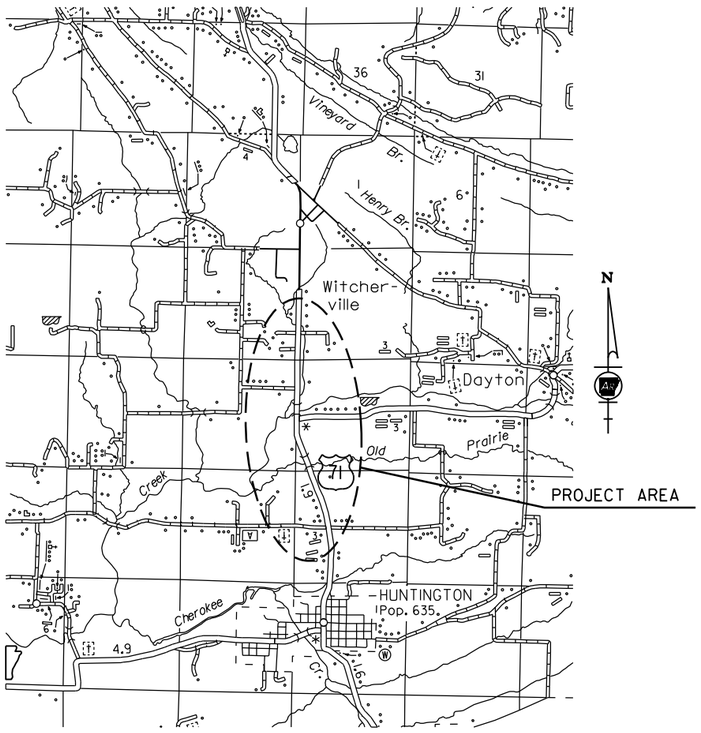

VICINITY MAP

NOT TO SCALE

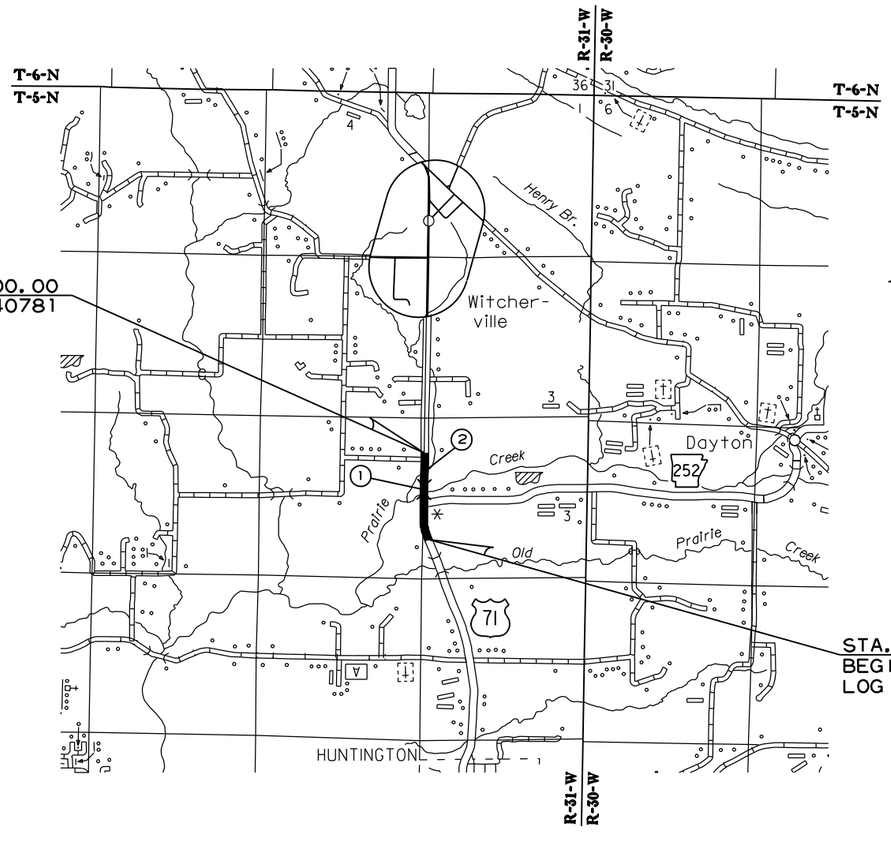

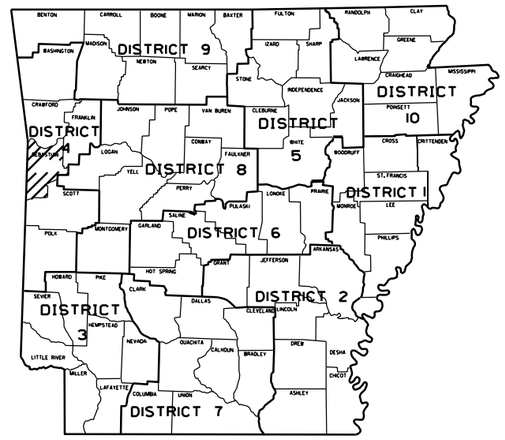

ARK. HWY. DIST. NO. 4

BRIDGE CONSTRUCTION DATA - HWY. 71

(1) STA. 114+65.47 BRIDGE END
BRIDGE NO. 07501
147'-10⅜" INTEGRAL PRESTRESSED CONC. GIRDER UNIT TYPE II
SPAN LENGTHS (49'-1 1/16", 49'-8⅛", 49'-1 1/16")
VAR. WIDTH CLEAR ROADWAY
19°30' RT. FORWARD SKEW
149'-6⅜" BRIDGE LENGTH
STA. 116+15.00 BRIDGE END

STRUCTURES OVER 20'-0"

(2) STA. 123+97 CONSTRUCT
QUAD. 9'X6'X95' R.C. BOX CULV'T.
25° RT. FWD. SKEW
WITH 3:1 WINGS LT. & RT.
Q50=2,226 CFS, D.A.=1.51 SQ. MI.
SPAN=41.93'

DESIGN TRAFFIC DATA - HWY. 71

DESIGN YEAR	2044
2024 ADT	9000
2044 ADT	11000
2044 DHV	1210
DIRECTIONAL DISTRIBUTION	0.60
TRUCKS	10%
DESIGN SPEED	60 MPH

	BEGIN PROJECT	MID-POINT OF PROJECT	END PROJECT
LATITUDE	N 35°06'20"	N 35°06'35"	N 35°06'52"
LONGITUDE	W 94°16'01"	W 94°16'02"	W 94°16'02"

LENGTH OF PROJECT CALCULATED ALONG C.L. CONSTRUCTION

GROSS LENGTH OF PROJECT	3250.00	FEET OR	0.615	MILES
NET	"	" ROADWAY	3058.54	"	0.579 MILES
NET	"	" BRIDGES	191.46	"	0.036 MILES
NET	"	" PROJECT	3250.00	"	0.615 MILES

CERTIFICATE OF AUTHORIZATION
JACOBS ENGINEERING GROUP, INC.
No. 176
ARKANSAS-ENGINEER

STATE OF ARKANSAS
REGISTERED PROFESSIONAL ENGINEER
No. 8940
MARK ASHER

12/12/2023

$FILE$
...\Drawings\1-Title Sheet.dgn
$DATE$ 8:17:43 AM

DATE REVISED	DATE REVISED	FED.RD. DIST.NO.	STATE	JOB NO.	SHEET NO.	TOTAL SHEETS
		6	ARK.	040781	2	115
		INDEX OF SHEETS AND STANDARD DRAWINGS				

INDEX OF SHEETS

SHEET NO.	TITLE	BRIDGE NO.	DRWG.NO.
1	TITLE SHEET		
2	INDEX OF SHEETS AND STANDARD DRAWINGS		
3	GOVERNING SPECIFICATIONS AND GENERAL NOTES		
4 - 6	TYPICAL SECTIONS OF IMPROVEMENT		
7 - 17	SPECIAL DETAILS		
18 - 29	TEMPORARY EROSION CONTROL DETAILS		
30 - 39	MAINTENANCE OF TRAFFIC DETAILS		
40 - 42	PERMANENT PAVEMENT MARKING DETAILS		
43 - 48	QUANTITIES		
49	SCHEDULE OF BRIDGE QUANTITIES	07501	61940
50	SUMMARY OF QUANTITIES AND REVISIONS		
51 - 56	SURVEY CONTROL DETAILS		
57 - 61	PLAN AND PROFILE SHEETS		
62	LAYOUT OF BRIDGE HIGHWAY 71 OVER PRAIRIE CREEK (SHEET 1 OF 3)	07501	61941
63	LAYOUT OF BRIDGE HIGHWAY 71 OVER PRAIRIE CREEK (SHEET 2 OF 3)	07501	61942
64	LAYOUT OF BRIDGE HIGHWAY 71 OVER PRAIRIE CREEK (SHEET 3 OF 3)	07501	61943
65	DETAILS OF END BENT 1 (SHEET 1 OF 2)	07501	61944
66	DETAILS OF END BENT 1 (SHEET 2 OF 2)	07501	61945
67	DETAILS OF INTERMEDIATE BENT 2 (SHEET 1 OF 2)	07501	61946
68	DETAILS OF INTERMEDIATE BENT 2 (SHEET 2 OF 2)	07501	61947
69	DETAILS OF INTERMEDIATE BENT 3 (SHEET 1 OF 2)	07501	61948
70	DETAILS OF INTERMEDIATE BENT 3 (SHEET 2 OF 2)	07501	61949
71	DETAILS OF END BENT 4 (SHEET 1 OF 2)	07501	61950
72	DETAILS OF END BENT 4 (SHEET 2 OF 2)	07501	61951
73	DETAILS OF 148'-4" INTEGRAL PRESTRESSED CONCRETE GIRDER UNIT (SHEET 1 OF 10)	07501	61952
74	DETAILS OF 148'-4" INTEGRAL PRESTRESSED CONCRETE GIRDER UNIT (SHEET 2 OF 10)	07501	61953
75	DETAILS OF 148'-4" INTEGRAL PRESTRESSED CONCRETE GIRDER UNIT (SHEET 3 OF 10)	07501	61954
76	DETAILS OF 148'-4" INTEGRAL PRESTRESSED CONCRETE GIRDER UNIT (SHEET 4 OF 10)	07501	61955
77	DETAILS OF 148'-4" INTEGRAL PRESTRESSED CONCRETE GIRDER UNIT (SHEET 5 OF 10)	07501	61956
78	DETAILS OF 148'-4" INTEGRAL PRESTRESSED CONCRETE GIRDER UNIT (SHEET 6 OF 10)	07501	61957
79	DETAILS OF 148'-4" INTEGRAL PRESTRESSED CONCRETE GIRDER UNIT (SHEET 7 OF 10)	07501	61958
80	DETAILS OF 148'-4" INTEGRAL PRESTRESSED CONCRETE GIRDER UNIT (SHEET 8 OF 10)	07501	61959
81	DETAILS OF 148'-4" INTEGRAL PRESTRESSED CONCRETE GIRDER UNIT (SHEET 9 OF 10)	07501	61960
82	DETAILS OF 148'-4" INTEGRAL PRESTRESSED CONCRETE GIRDER UNIT (SHEET 10 OF 10)	07501	61961
83	DETAILS OF TYPE 1 & 2 SPECIAL APPROACH GUTTERS	07501	61962
84	DETAILS OF TYPE 3 & 4 SPECIAL APPROACH GUTTERS	07501	61963
85	DETAILS OF TYPE 1 SPECIAL APPROACH SLAB	07501	61964
86	DETAILS OF TYPE 2 SPECIAL APPROACH SLAB	07501	61965
87 - 115	CROSS SECTIONS		

NOTE: CROSS SECTIONS NOT NORMALLY INCLUDED IN PLANS SOLD TO PROSPECTIVE BIDDERS, BUT MAY BE HAD UPON REQUEST.

BRIDGE STANDARD DRAWINGS

DRWG.NO.	TITLE	DATE
55000	STANDARD DETAILS FOR EMBANKMENT CONSTRUCTION AND BACKFILL AT BRIDGE ENDS	02-27-14
55001	STANDARD DETAILS FOR DUMPED RIPRAP AND FILTER BLANKET AND COMPUTING EXCAVATION FOR STRUCTURES	02-27-14
55005	STANDARD DETAILS FOR PERMANENT STEEL BRIDGE DECK FORMS FOR STEEL & CONCRETE GIRDER SPANS	03-24-16
55010	STANDARD DETAILS FOR TYPE D BRIDGE NAME PLATE	01-11-23
55020	STANDARD DETAILS FOR STEEL H-PILES AND PILE ENCASEMENTS	03-24-16

ROADWAY STANDARD DRAWINGS

DRWG.NO.	TITLE	DATE
CDP-1	CONCRETE DITCH PAVING	12-08-16
CG-1	CURBING DETAILS	11-29-07
DR-1	DETAILS OF DRIVEWAYS & ISLANDS	05-19-22
DR-2	DETAILS OF DRIVEWAYS & STREET TURNOUTS	05-19-22
FES-1	FLARED END SECTION	10-18-96
FES-2	FLARED END SECTION	10-18-96
GR-6	GUARDRAIL DETAILS	05-19-22
GR-7	GUARDRAIL DETAILS	11-07-19
GR-8	GUARDRAIL DETAILS	11-07-19
GR-9	GUARDRAIL DETAILS	11-07-19
GR-10	GUARDRAIL DETAILS	11-07-19
GR-11	GUARDRAIL DETAILS	11-07-19
GR-12	GUARDRAIL DETAILS	05-14-20
MB-1	MAILBOX DETAILS	11-18-04
PBC-1	PRECAST CONCRETE BOX CULVERTS	01-28-15
PCC-1	CONCRETE PIPE CULVERT FILL HEIGHTS & BEDDING	02-27-14
PCM-1	METAL PIPE CULVERT FILL HEIGHTS & BEDDING	02-27-14
PCP-1	PLASTIC PIPE CULVERT (HIGH DENSITY POLYETHYLENE)	02-27-14
PCP-2	PLASTIC PIPE CULVERT (PVC F949)	02-27-14
PCP-3	PLASTIC PIPE CULVERT (POLYPROPYLENE)	02-27-20
PM-1	PAVEMENT MARKING DETAILS	02-27-20
PU-1	DETAILS OF PIPE UNDERDRAIN	12-08-16
RCB-1	REINFORCED CONCRETE BOX CULVERT DETAILS	07-26-12
RCB-2	EXCAVATION PAY LIMITS, BACKFILL, & SOLID SODDING FOR BOX CULVERTS	11-20-03
RCB-3	METHOD OF EXTENDING EXISTING R.C. BOX CULVERTS	10-12-95
SE-2	TABLES AND METHOD OF SUPERELEVATION FOR TWO-WAY TRAFFIC	11-07-19
SI-1	DETAILS OF SPECIAL ITEMS	10-25-18
TC-1	STANDARD TRAFFIC CONTROLS FOR HIGHWAY CONSTRUCTION	11-07-19
TC-2	STANDARD TRAFFIC CONTROLS FOR HIGHWAY CONSTRUCTION	05-20-21
TC-3	STANDARD TRAFFIC CONTROLS FOR HIGHWAY CONSTRUCTION	08-12-21
TC-4	STANDARD TRAFFIC CONTROLS FOR HIGHWAY CONSTRUCTION-TEMPORARY PRECAST BARRIER	11-07-19
TC-5	STANDARD TRAFFIC CONTROLS FOR HIGHWAY CONSTRUCTION-TEMPORARY PRECAST BARRIER	11-07-19
TEC-1	TEMPORARY EROSION CONTROL DEVICES	11-16-17
TEC-2	TEMPORARY EROSION CONTROL DEVICES	06-02-94
TEC-3	TEMPORARY EROSION CONTROL DEVICES	11-03-94
WF-4	WIRE FENCE TYPE C AND D	08-22-02
W-X003-1	DETAILS OF STANDARD WINGS FOR REINFORCED CONCRETE BOX CULVERTS	05-10-66
R-100X-0	DETAILS OF STANDARD BARREL SECTIONS FOR REINFORCED CONCRETE BOX CULVERTS	02-08-63

STATE OF ARKANSAS
REGISTERED PROFESSIONAL ENGINEER
No. 8940
MARK ASHER

12/12/2023

INDEX OF SHEETS AND STANDARD DRAWINGS

T:\Job\03337300 ArDot TO 144 Job 040781\700 CADD Files\770 Roadway Files\Drawings\2-Index Standard Drawings Governing Specs.dgn
12/12/2023 10:17:48 AM ...\2-Index Standard Drawings Governing Specs.dgn

DATE REVISED	DATE REVISED	FED.RD. DIST.NO.	STATE	JOB NO.	SHEET NO.	TOTAL SHEETS
01-05-24		6	ARK.	040781	3	115
01-11-24		GOVERNING SPECIFICATIONS & GENERAL NOTES				

GOVERNING SPECIFICATIONS

ARKANSAS STATE HIGHWAY COMMISSION STANDARD SPECIFICATIONS FOR HIGHWAY CONSTRUCTION, EDITION OF 2014, AND THE FOLLOWING SPECIAL PROVISIONS AND SUPPLEMENTAL SPECIFICATIONS:

NUMBER	TITLE
ERRATA_____	ERRATA FOR THE BOOK OF STANDARD SPECIFICATIONS
FHWA-1273___	REQUIRED CONTRACT PROVISIONS FEDERAL-AID CONSTRUCTION CONTRACTS
FHWA-1273___	SUPPLEMENT - EQUAL EMPLOYMENT OPPORTUNITY - NOTICE TO CONTRACTORS
FHWA-1273___	SUPPLEMENT - SPECIFIC EQUAL EMPLOYMENT OPPORTUNITY RESPONSIBILITIES (23 U.S.C. 140)
FHWA-1273___	SUPPLEMENT - EQUAL EMPLOYMENT OPPORTUNITY - GOALS AND TIMETABLES
FHWA-1273___	SUPPLEMENT - EQUAL EMPLOYMENT OPPORTUNITY - FEDERAL STANDARDS
FHWA-1273___	SUPPLEMENT - POSTERS AND NOTICES REQUIRED FOR FEDERAL-AID PROJECTS
FHWA-1273___	SUPPLEMENT - WAGE RATE DETERMINATION
100-3_____	CONTRACTOR'S LICENSE
100-4_____	DEPARTMENT NAME CHANGE
102-2_____	ISSUANCE OF PROPOSALS
103-2_____	CONTACT INFORMATION FOR MOTORIST DAMAGE CLAIMS
105-4_____	MAINTENANCE DURING CONSTRUCTION
107-2_____	RESTRAINING CONDITIONS
108-1_____	LIQUIDATED DAMAGES
108-2_____	WORK ALLOWED PRIOR TO ISSUANCE OF WORK ORDER
110-1_____	PROTECTION OF WATER QUALITY AND WETLANDS
210-1_____	UNCLASSIFIED EXCAVATION
303-1_____	AGGREGATE BASE COURSE
306-1_____	QUALITY CONTROL AND ACCEPTANCE
307-1_____	CEMENT
308-1_____	CEMENT
400-1_____	TACK COATS
400-4_____	DESIGN AND QUALITY CONTROL OF ASPHALT MIXTURES
400-5_____	PERCENT AIR VOIDS FOR ACHM MIX DESIGNS
400-6_____	LIQUID ANTI-STRIP ADDITIVE
400-7_____	TRACKLESS TACK
404-3_____	DESIGN OF ASPHALT MIXTURES
409-2_____	ASPHALT LABORITORY FACILITY
410-1_____	CONSTRUCTION REQUIREMENTS AND ACCEPTANCE OF ASPHALT CONCRETE PLANT MIX COURSES
410-2_____	DEVICES FOR MEASURING DENSITY FOR ROLLING PATTERNS
410-4_____	EVALUATION OF ACHM SUBLOT REPLACEMENT MATERIAL
416-1_____	RECYCLED ASPHALT PAVEMENT
501-2_____	CEMENT
600-2_____	INCIDENTAL CONSTRUCTION
603-1_____	LANE CLOSURE NOTIFICATION
604-1_____	RETROREFLECTIVE SHEETING FOR TRAFFIC CONTROL DEVICES IN CONSTRUCTION ZONES
604-3_____	TRAFFIC CONTROL DEVICES IN CONSTRUCTION ZONES (MASH)
605-1_____	CONCRETE DITCH PAVING
606-1_____	PIPE CULVERTS FOR SIDE DRAINS
617-1_____	GUARDRAIL TERMINAL (TYPE 2)
617-2_____	GUARDRAIL DELINEATORS
620-1_____	MULCH COVER
632-1_____	CONCRETE ISLAND
734-1_____	BRIDGE END TERMINAL
800-1_____	STRUCTURES
802-3_____	CONCRETE FOR STRUCTURES
802-4_____	CEMENT
804-2_____	REINFORCING STEEL FOR STRUCTURES
JOB 040781__	BIDDING REQUIREMENTS AND CONDITIONS
JOB 040781__	BROADBAND INTERNET SERVICE FOR ASPHALT CONCRETE PLANT
JOB 040781__	BROADBAND INTERNET SERVICE FOR FIELD OFFICE
JOB 040781__	BUY AMERICA - CONSTRUCTION MATERIALS
JOB 040781__	CARGO PREFERENCE ACT REQUIREMENTS
JOB 040781__	CLASS C FLY ASH IN PORTLAND CEMENT CONCRETE PAVEMENT AND CLASS S(AE) CONCRETE
JOB 040781__	COLD MILLING – COUNTY PROPERTY
JOB 040781__	CONCRETE BRIDGE DECK CURING AND SURFACE TREATMENT RESTRICTIONS
JOB 040781__	CONSTRUCTION IN SPECIAL FLOOD HAZARD AREAS
JOB 040781__	CULVERT CLEAN OUT
JOB 040781__	DESIGN AND QUALITY CONTROL ASPHALT MIXTURES
JOB 040781__	DESIGN OF ASPHALT MIXTURES - AGGREGATES
JOB 040781__	DISADVANTAGED BUSINESS ENTERPRISE BIDDER'S RESPONSIBILITIES
JOB 040781__	ESTABLISHING CONTRACT TIME – WORKING DAY CONTRACT
JOB 040781__	GOALS FOR DISADVANTAGED BUSINESS ENTERPRISE PARTICIPATION
JOB 040781__	LIQUIDATED DAMAGES PROCEDURE FOR BID LETTINGS
JOB 040781__	LONGITUDINAL JOINT DENSITIES FOR ACHM SURFACE COURSES
JOB 040781__	MANDATORY ELECTRONIC CONTRACT
JOB 040781__	MANDATORY ELECTRONIC DOCUMENT SUBMITTAL
JOB 040781__	NESTING SITES OF MIGRATORY BIRDS
JOB 040781__	OFF-SITE RESTRAINING CONDITIONS FOR AMERICAN BURYING BEETLE
JOB 040781__	OFF-SITE RESTRAINING CONDITIONS FOR NORTHERN LONG-EARED BATS
JOB 040781__	PARTNERING REQUIREMENTS
JOB 040781__	PLASTIC PIPE
JOB 040781__	PRICE ADJUSTMENT FOR ASPHALT BINDER
JOB 040781__	PRICE ADJUSTMENT FOR FUEL
JOB 040781__	PROHIBITION OF CERTAIN TELECOMMUNICATIONS AND VIDEO SURVEILLANCE SERVICES OR EQUIPMENT
JOB 040781__	RUMBLE STRIPS
JOB 040781__	SECTION 404 NATIONWIDE 14 PERMIT REQUIREMENTS
JOB 040781__	SHORING
JOB 040781__	SHORING FOR CULVERTS
JOB 040781__	SOIL STABILIZATION
JOB 040781__	SPECIAL CLEARING REQUIREMENTS
JOB 040781__	STORM WATER POLLUTION PREVENTION PLAN
JOB 040781__	SUBMISSION OF ASPHALT CONCRETE HOT MIX ACCEPTANCE TEST RESULTS
JOB 040781__	TOTAL SOLAR ECLIPSE
JOB 040781__	UTILITY ADJUSTMENTS
JOB 040781__	VALUE ENGINEERING
JOB 040781__	WARM MIX ASPHALT
JOB 040781__	WORK ALLOWED PRIOR TO ISSUANCE OF WORK ORDER FOR TREE CLEARING

STATE OF ARKANSAS
REGISTERED PROFESSIONAL ENGINEER
No. 8940
MARK ASHER

01/11/2024

GENERAL NOTES

1. GRADE LINE DENOTES FINISHED GRADE WHERE SHOWN ON PLANS.
2. ALL PIPE LINES, POWER, TELEPHONE, AND TELEGRAPH LINES TO BE MOVED OR LOWERED BY THE RESPECTIVE OWNERS AS PER AGREEMENT WITH SUCH OWNERS.
3. ANY EQUIPMENT OR APPURTENANCE THAT INTERFERES WITH THE PROPOSED CONSTRUCTION AND WHICH MAY BE THE PROPERTY OF UTILITY SERVICE ORGANIZATIONS SHALL BE MOVED BY THE OWNERS UNLESS OTHERWISE PROVIDED.
4. THE CONTRACTOR SHALL BE RESPONSIBLE FOR MAINTAINING U. S. MAILBOXES WITHIN THE PROJECT LIMITS IN SUCH A MANNER THAT THE PUBLIC MAY RECEIVE CONTINUED MAIL SERVICE. PAYMENT WILL BE CONSIDERED INCLUDED IN THE PRICE BID FOR THE VARIOUS BID ITEMS.
5. ALL LAND MONUMENTS LOCATED WITHIN THE CONSTRUCTION AREA SHALL BE PROTECTED IN ACCORDANCE WITH SECTION 107.12 OF THE STANDARD SPECIFICATIONS.
6. ALL TREES THAT DO NOT DIRECTLY INTERFERE WITH THE PROPOSED CONSTRUCTION SHALL BE SPARED AS DIRECTED BY THE ENGINEER. CARE AND DISCRETION SHALL BE USED TO ENSURE THAT ALL TREES NOT TO BE REMOVED SHALL BE HARMED AS LITTLE AS POSSIBLE DURING THE CONSTRUCTION OPERATIONS.
7. THE CONTRACTOR SHALL BE RESPONSIBLE FOR PROVIDING A FENCE TO CONTROL LIVESTOCK IN AREAS WHERE PASTURES ARE SEVERED. WIRE FENCE MAY BE CONSTRUCTED INITIALLY, OR IN LIEU THEREOF, THE CONTRACTOR AT HIS OWN EXPENSE, MAY ELECT TO PROVIDE TEMPORARY FENCING SUITABLE TO CONTAIN LIVESTOCK.
8. THE SEQUENCE AS SHOWN ON THE MAINTENANCE OF TRAFFIC PLANS IS A GENERAL OUTLINE FOR THE CONSTRUCTION OF THIS PROJECT, AND IN NO WAY IS IT INTENDED TO COVER EVERY ITEM IN THE PROJECT. ITEMS NOT CRITICAL TO THE CONSTRUCTION SEQUENCE MAY BE CONSTRUCTED IN ANY STAGE AS APPROVED BY THE RESIDENT ENGINEER.
9. ALL FLEXIBLE BASE AND ASPHALTIC PAVEMENTS REMOVED SHALL BE PAID FOR UNDER THE ITEM NO. 210 - UNCLASSIFIED EXCAVATION.
10. THE EXISTING ASPHALT PAVEMENT TO BE REMOVED FROM THE REMAINING PAVEMENT SHALL BE SEPARATED BY SAWING ALONG A NEAT LINE. AFTER SAWING, THE PAVEMENT TO BE REMOVED SHALL BE CAREFULLY REMOVED IN A MANNER THAT WILL NOT DAMAGE THE PAVEMENT THAT IS TO REMAIN. ANY DAMAGE OF THE ASPHALT PAVEMENT THAT IS TO REMAIN IN PLACE SHALL BE REPAIRED AT THE CONTRACTOR'S EXPENSE.

T:\Job\03337300 ArDot TO I44 Job 040781\T00 CADD Files\T70 Roadway Files\Drawings\2-Index Standard Drawings Governing Specs.dgn
...\2-Index Standard Drawings Governing Specs.dgn
1/11/2024 8:50:05 AM

DATE REVISED	DATE REVISED	FED.RD. DIST.NO.	STATE	JOB NO.	SHEET NO.	TOTAL SHEETS
		6	ARK.	040781	4	115
		TYPICAL SECTIONS OF IMPROVEMENT				

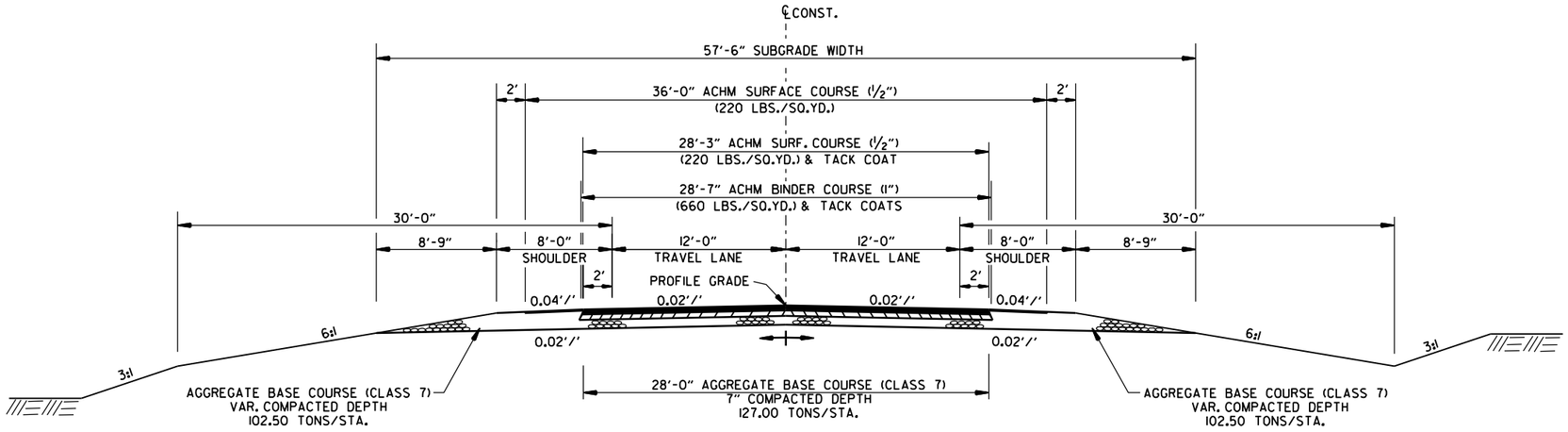

HWY. 71 FULL DEPTH
STA. 105+00.00 - STA. 108+25.00
STA. 117+75.00 - STA. 123+00.00

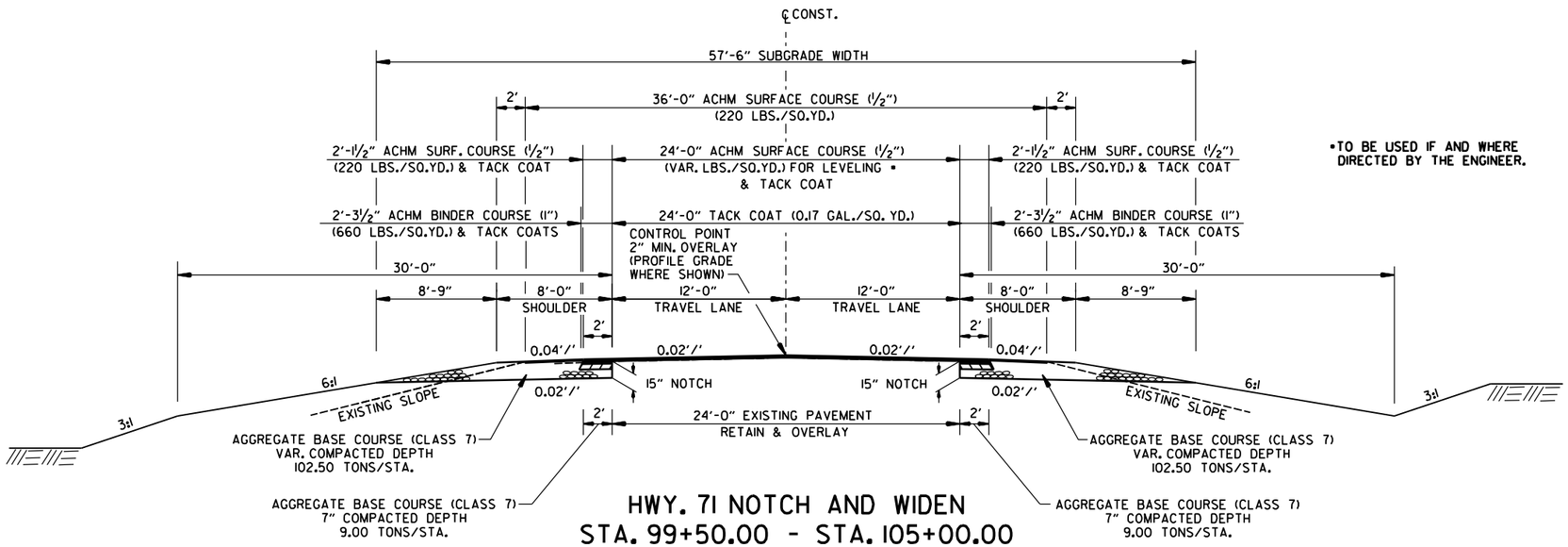

•TO BE USED IF AND WHERE DIRECTED BY THE ENGINEER.

HWY. 71 NOTCH AND WIDEN
STA. 99+50.00 - STA. 105+00.00
STA. 123+00.00 - STA. 132+00.00

NOTES:
THE FINAL 2" OF SURFACE COURSE IS TO BE PLACED AFTER ALL OTHER COURSES HAVE BEEN LAID. LONGITUDINAL JOINTS SHALL BE AT LANE LINES.

REFER TO CROSS SECTIONS FOR DEVIATION FROM THE NORMAL SLOPES. NO CHANGES SHALL BE MADE FROM THE PLANNED SLOPES WITHOUT THE APPROVAL OF THE ENGINEER.

THE THICKNESS OF AGGREGATE BASE COURSE SHALL BE WITHIN PLUS OR MINUS ONE INCH OF THE PLAN THICKNESS SHOWN. THE CONTRACTOR WILL CORRECT ANY DEFICIENT THICKNESS THAT DOES NOT MEET TOLERANCE INDICTED. PAYMENT WILL NOT BE MADE FOR MATERIAL PLACED IN EXCESS OF THE TOLERANCE INDICATED.

ASPHALT FOR LEVELING OF EXISTING PAVEMENT SHALL BE PLACED ONLY IF AND WHERE DIRECTED BY THE ENGINEER. CALCULATIONS FOR THE AMOUNT OF LEVELING AND LEVELING OPERATIONS SHALL BE PERFORMED BEFORE CONSTRUCTING NOTCH AND WIDENING. CALCULATIONS WILL NOT BE PAID FOR DIRECTLY, BUT WILL BE CONSIDERED INCLUDED IN THE VARIOUS PAY ITEMS.

BLEEDER DITCHES - PRIOR TO AND DURING PLACEMENT OF PAVEMENT AT THE NOTCH, THE CONTRACTOR SHALL PROVIDE POSITIVE DRAINAGE AT ALL TIMES. THE METHOD(S) AND SPACING USED SHALL BE APPROVED BY THE ENGINEER. PAYMENT FOR THIS WORK SHALL BE CONSIDERED INCLUDED IN THE PRICE BID FOR THE VARIOUS CONTRACT ITEMS.

STATE OF ARKANSAS
REGISTERED PROFESSIONAL ENGINEER
No. 8940
MARK ASHER

12/12/2023

TYPICAL SECTIONS OF IMPROVEMENT

$FILE$ ...\3-TypicalSections of Improvement.dgn
$DATE$ 8/7/24 AM

DATE REVISED	DATE REVISED	FED.RD. DIST.NO.	STATE	JOB NO.	SHEET NO.	TOTAL SHEETS
		6	ARK.	040781	5	115
		TYPICAL SECTIONS OF IMPROVEMENT				

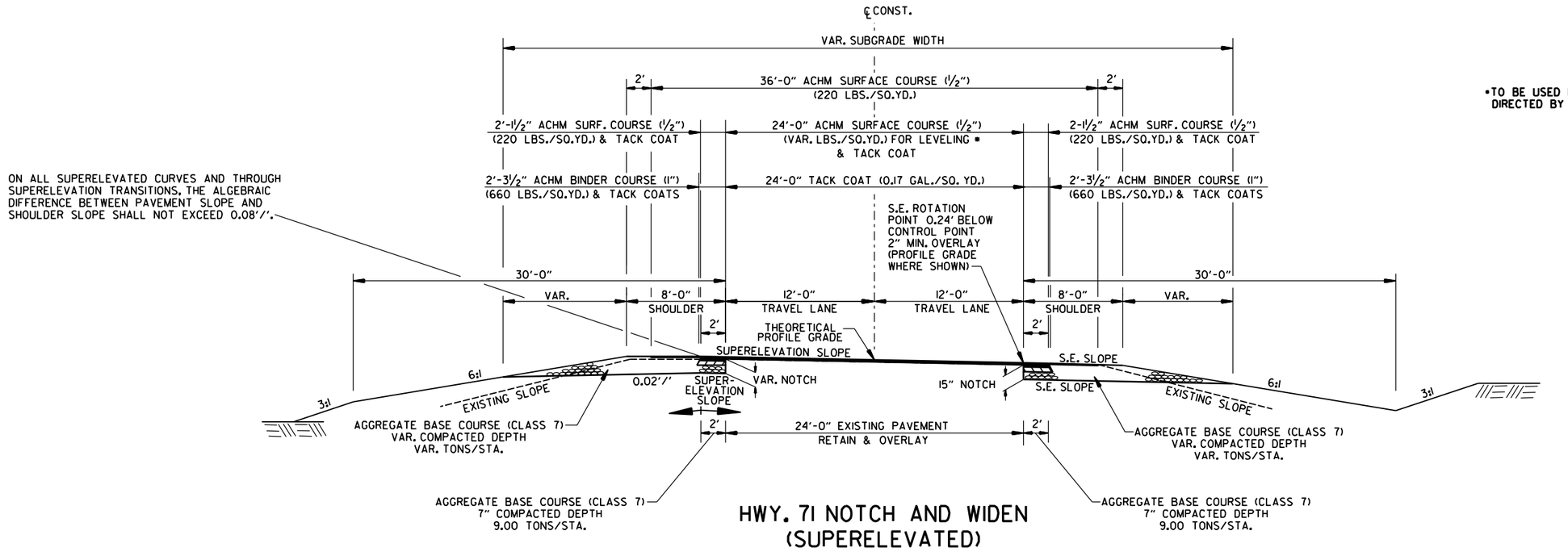

HWY. 71 NOTCH AND WIDEN (SUPERELEVATED)

•TO BE USED IF AND WHERE DIRECTED BY THE ENGINEER.

NOTES:
THE FINAL 2" OF SURFACE COURSE IS TO BE PLACED AFTER ALL OTHER COURSES HAVE BEEN LAID. LONGITUDINAL JOINTS SHALL BE AT LANE LINES.

REFER TO CROSS SECTIONS FOR DEVIATION FROM THE NORMAL SLOPES. NO CHANGES SHALL BE MADE FROM THE PLANNED SLOPES WITHOUT THE APPROVAL OF THE ENGINEER.

THE THICKNESS OF AGGREGATE BASE COURSE SHALL BE WITHIN PLUS OR MINUS ONE INCH OF THE PLAN THICKNESS SHOWN. THE CONTRACTOR WILL CORRECT ANY DEFICIENT THICKNESS THAT DOES NOT MEET TOLERANCE INDICTED. PAYMENT WILL NOT BE MADE FOR MATERIAL PLACED IN EXCESS OF THE TOLERANCE INDICATED.

ASPHALT FOR LEVELING OF EXISTING PAVEMENT SHALL BE PLACED ONLY IF AND WHERE DIRECTED BY THE ENGINEER. CALCULATIONS FOR THE AMOUNT OF LEVELING AND LEVELING OPERATIONS SHALL BE PERFORMED BEFORE CONSTRUCTING NOTCH AND WIDENING. CALCULATIONS WILL NOT BE PAID FOR DIRECTLY, BUT WILL BE CONSIDERED INCLUDED IN THE VARIOUS PAY ITEMS.

BLEEDER DITCHES - PRIOR TO AND DURING PLACEMENT OF PAVEMENT AT THE NOTCH, THE CONTRACTOR SHALL PROVIDE POSITIVE DRAINAGE AT ALL TIMES. THE METHOD(S) AND SPACING USED SHALL BE APPROVED BY THE ENGINEER. PAYMENT FOR THIS WORK SHALL BE CONSIDERED INCLUDED IN THE PRICE BID FOR THE VARIOUS CONTRACT ITEMS.

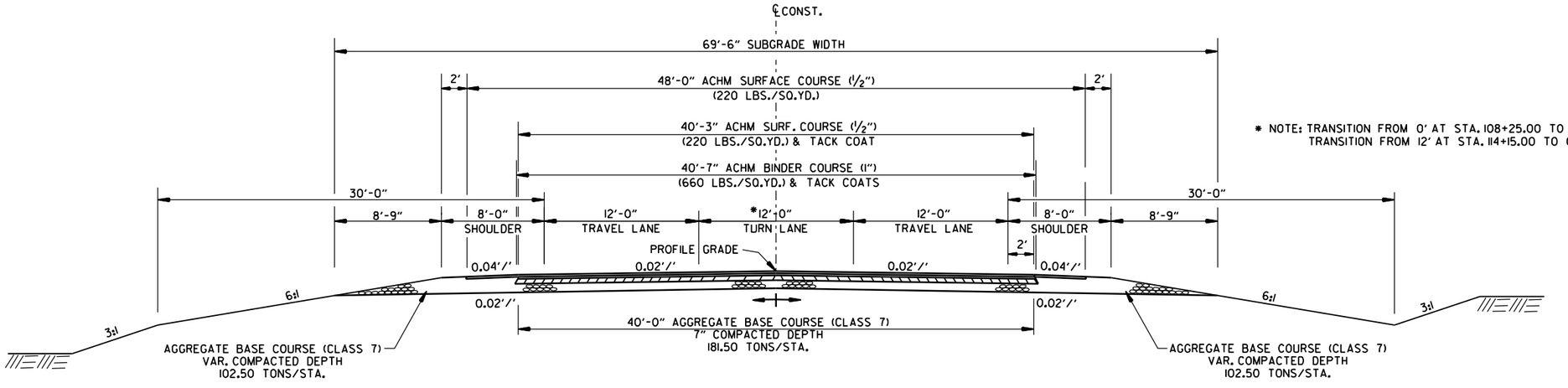

* NOTE: TRANSITION FROM 0' AT STA. 108+25.00 TO 12' AT STA.111+85.00
TRANSITION FROM 12' AT STA. 114+15.00 TO 0' AT STA. 117+75.00

HWY. 71 FULL DEPTH WITH TURN LANE
STA. 108+25.00 - STA. 114+65.47 B.E.
STA. 116+15.00 B.E. - STA. 117+75.00

STATE OF ARKANSAS
REGISTERED PROFESSIONAL ENGINEER
No. 8940
MARK ASHER

12/12/2023

TYPICAL SECTIONS OF IMPROVEMENT

#FILE# ...\3-TypicalSections of Improvement.dgn
#DATE# 11/7/55 AM

DATE REVISED	DATE REVISED	FED.RD. DIST.NO.	STATE	JOB NO.	SHEET NO.	TOTAL SHEETS
		6	ARK.	040781	6	115
		TYPICAL SECTIONS OF IMPROVEMENT				

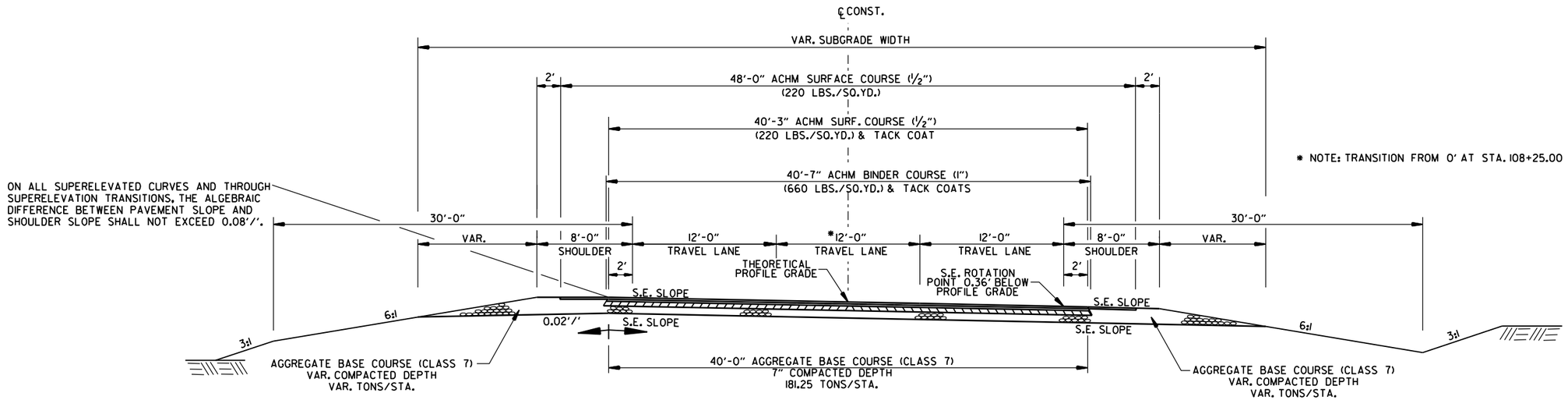

* NOTE: TRANSITION FROM 0' AT STA. 108+25.00 TO 12' AT STA.111+85.00

HWY. 71 FULL DEPTH WITH TURN LANE (SUPERELEVATED)

NOTES:
THE FINAL 2" OF SURFACE COURSE IS TO BE PLACED AFTER ALL OTHER COURSES HAVE BEEN LAID. LONGITUDINAL JOINTS SHALL BE AT LANE LINES.

REFER TO CROSS SECTIONS FOR DEVIATION FROM THE NORMAL SLOPES. NO CHANGES SHALL BE MADE FROM THE PLANNED SLOPES WITHOUT THE APPROVAL OF THE ENGINEER.

THE THICKNESS OF AGGREGATE BASE COURSE SHALL BE WITHIN PLUS OR MINUS ONE INCH OF THE PLAN THICKNESS SHOWN. THE CONTRACTOR WILL CORRECT ANY DEFICIENT THICKNESS THAT DOES NOT MEET TOLERANCE INDICTED. PAYMENT WILL NOT BE MADE FOR MATERIAL PLACED IN EXCESS OF THE TOLERANCE INDICATED.

ASPHALT FOR LEVELING OF EXISTING PAVEMENT SHALL BE PLACED ONLY IF AND WHERE DIRECTED BY THE ENGINEER. CALCULATIONS FOR THE AMOUNT OF LEVELING AND LEVELING OPERATIONS SHALL BE PERFORMED BEFORE CONSTRUCTING NOTCH AND WIDENING. CALCULATIONS WILL NOT BE PAID FOR DIRECTLY, BUT WILL BE CONSIDERED INCLUDED IN THE VARIOUS PAY ITEMS.

BLEEDER DITCHES - PRIOR TO AND DURING PLACEMENT OF PAVEMENT AT THE NOTCH, THE CONTRACTOR SHALL PROVIDE POSITIVE DRAINAGE AT ALL TIMES. THE METHOD(S) AND SPACING USED SHALL BE APPROVED BY THE ENGINEER. PAYMENT FOR THIS WORK SHALL BE CONSIDERED INCLUDED IN THE PRICE BID FOR THE VARIOUS CONTRACT ITEMS.

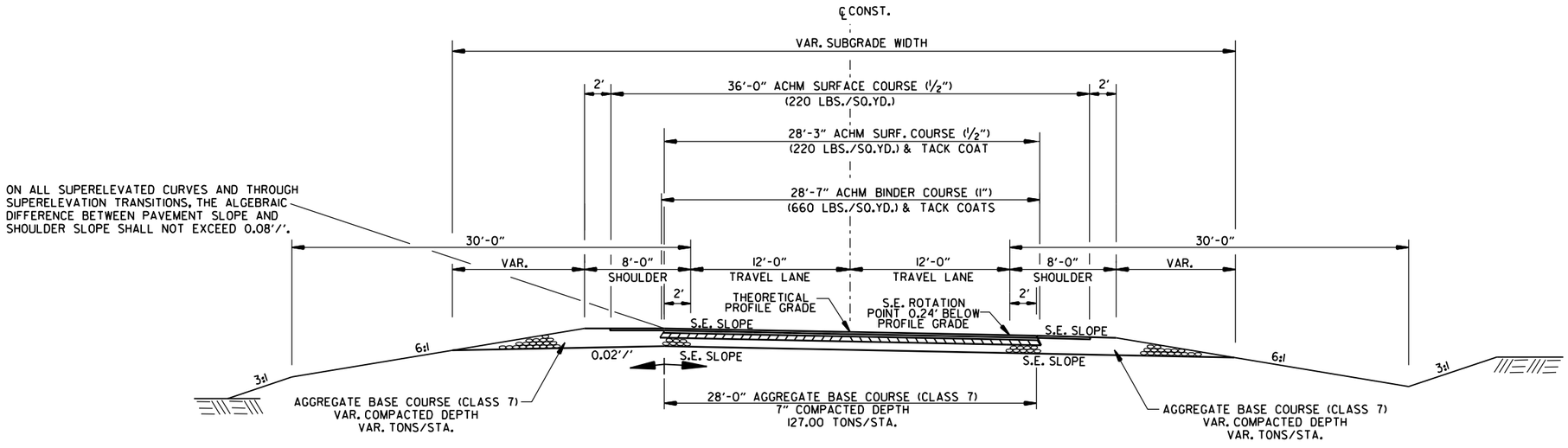

HWY. 71 FULL DEPTH (SUPERELEVATED)

STATE OF ARKANSAS
REGISTERED PROFESSIONAL ENGINEER
No. 8940
MARK ASHER

12/12/2023

TYPICAL SECTIONS OF IMPROVEMENT

$FILE$ ...\3-TypicalSections of Improvement.dgn
$DATE$ 11/7/55 AM

DATE REVISED	DATE REVISED	FED.RD. DIST.NO.	STATE	JOB NO.	SHEET NO.	TOTAL SHEETS
		6	ARK.	040781	7	115
		SPECIAL DETAILS				

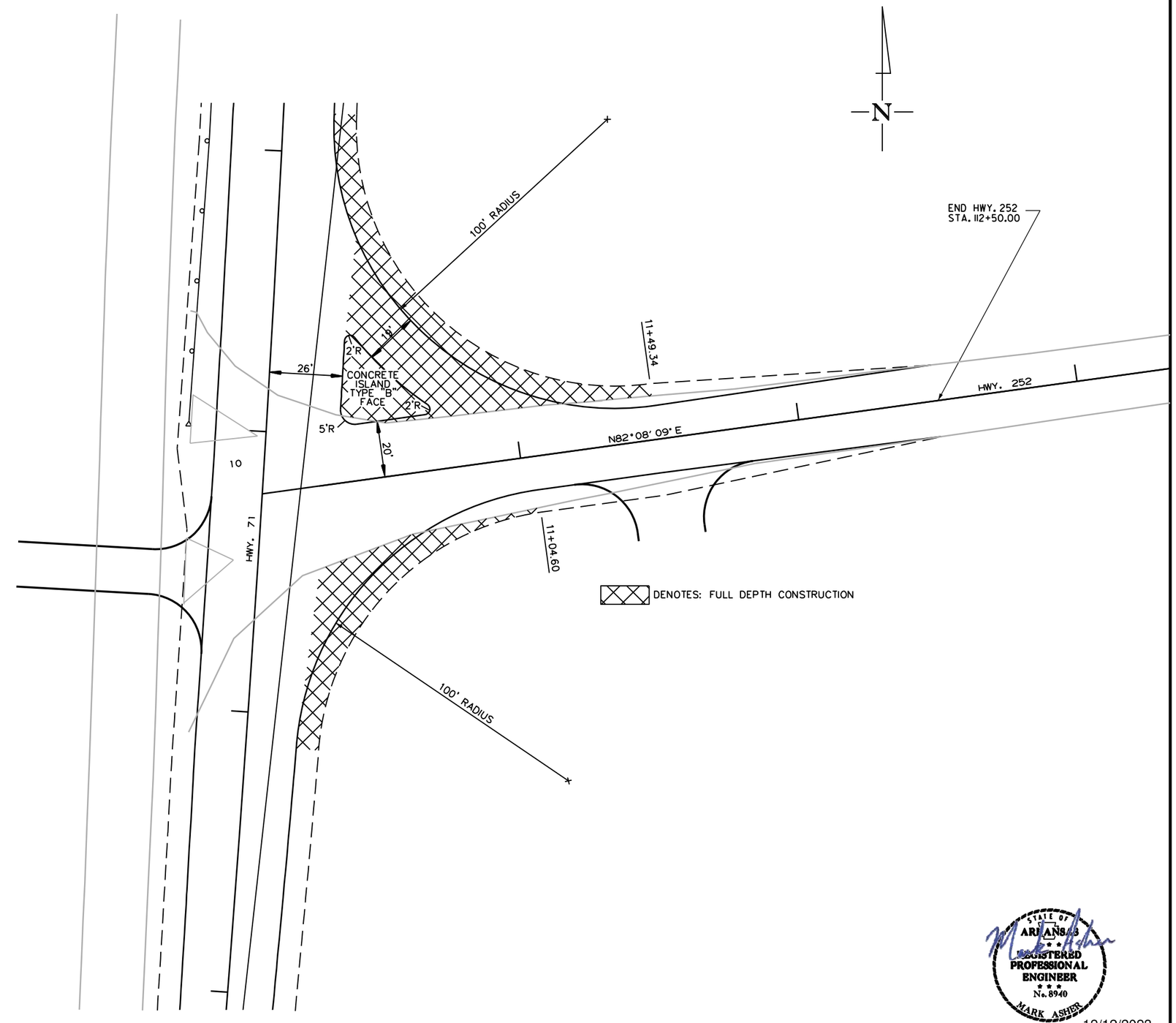

INTERSECTION DETAIL

STATE OF ARKANSAS
REGISTERED PROFESSIONAL ENGINEER
No. 8940
MARK ASHER

12/12/2023

SPECIAL DETAILS

$DATE$ 08/09 AM ...\Drawings\4-SpecialDetails.dgn $FILE$

DATE REVISED	DATE REVISED	FED.RD. DIST.NO.	STATE	JOB NO.	SHEET NO.	TOTAL SHEETS
		6	ARK.	040781	8	115
		SPECIAL DETAILS				

NOTES:

1. THIS DETAIL TO BE USED IF AND WHERE DIRECTED BY THE ENGINEER.

2. QUANTITIES FOR METHOD OF RAISING GRADE USING ASPHALT WERE CALCULATED ON THIS PROJECT AT LOCATIONS WHERE THE DISTANCE BETWEEN THE EXISTING ASPHALT ROADWAY AND THE PROPOSED SUBGRADE WAS 1.00 FEET OR LESS.

3. IN LOCATIONS WHERE THE DISTANCE BETWEEN THE PROPOSED SUBGRADE AND THE EXISTING ASPHALT ROADWAY IS MORE THAN 1.00 FEET, SCARIFICATION OF THE EXISTING ASPHALT ROADWAY WILL BE REQUIRED AS STATED IN SECTION 210, SUBSECTION 210.09, OF THE STANDARD SPECIFICATIONS, EDITION OF 2014.

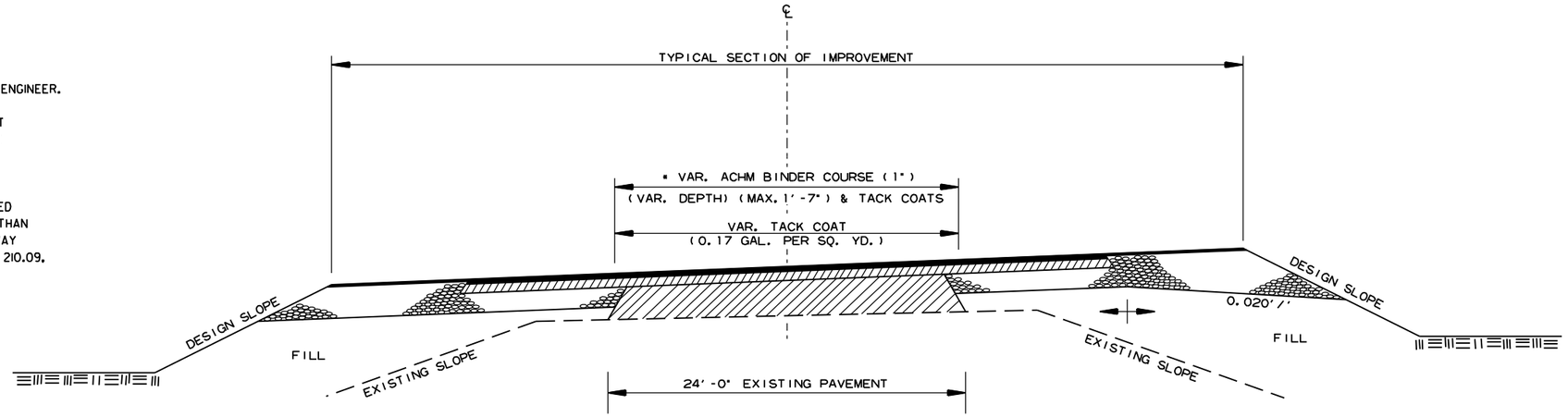

* 7" AGGREGATE BASE COURSE (CLASS 7)
TO BE REPLACED WITH ACHM BINDER COURSE (1")

METHOD OF RAISING GRADE

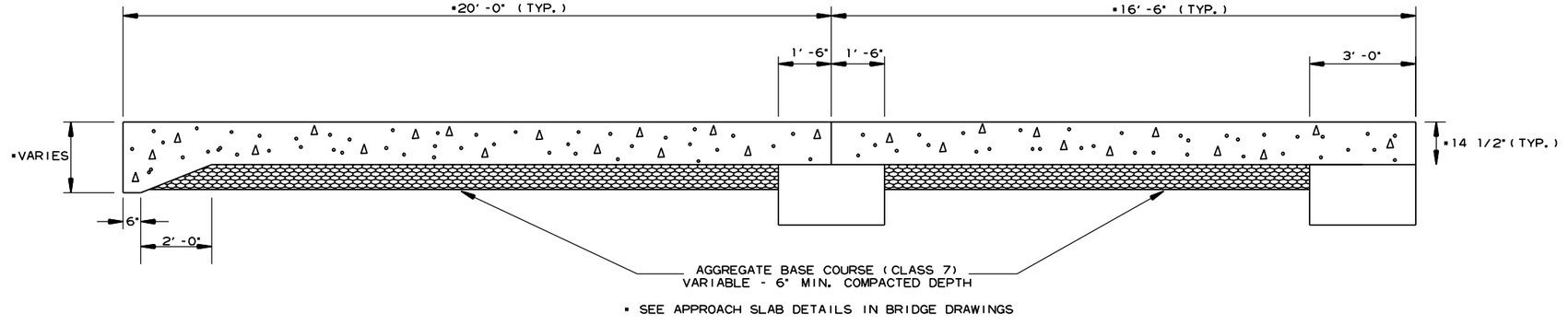

* SEE APPROACH SLAB DETAILS IN BRIDGE DRAWINGS

SECTION OF APPROACH SLAB

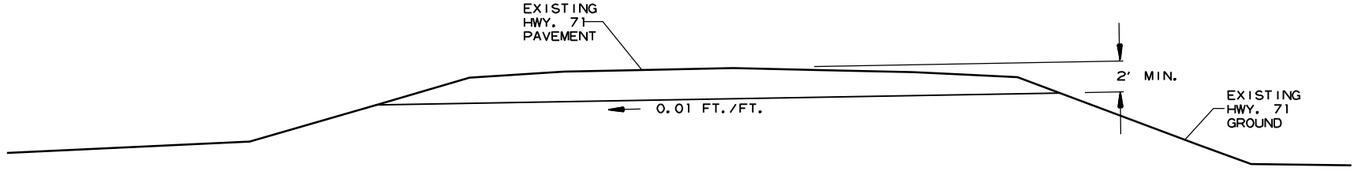

REMOVAL OF EXISTING PAVEMENT

STATE OF ARKANSAS
REGISTERED PROFESSIONAL ENGINEER
No. 8940
MARK ASHER

12/12/2023

SPECIAL DETAILS

$FILE$
$DATE$ 11:48:09 AM ...\Drawings\4-SpecialDetails.dgn

DATE REVISED	DATE REVISED	FED.RD. DIST.NO.	STATE	JOB NO.	SHEET NO.	TOTAL SHEETS
		6	ARK.	040781	9	115
		SPECIAL DETAILS				

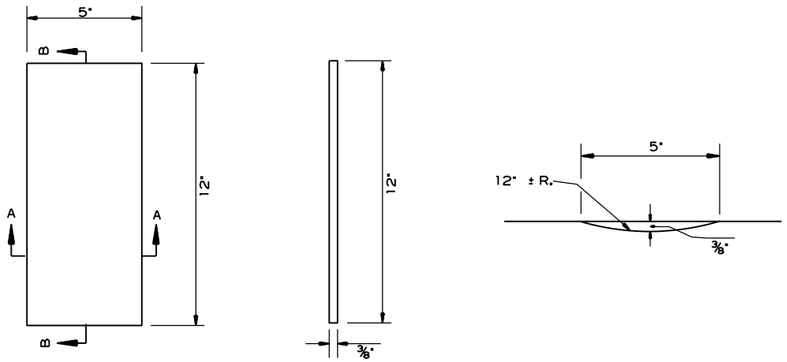

PLAN SECTION B-B SECTION A-A

DETAILS OF RUMBLE STRIPS

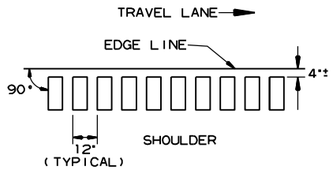

LOCATION PLAN OF RUMBLE STRIPS
LEFT OR RIGHT SHOULDER

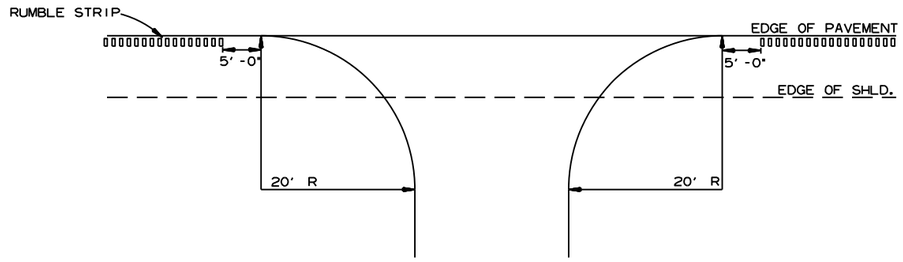

DETAIL FOR RUMBLE STRIP GAP
AT DRIVEWAY TURNOUTS

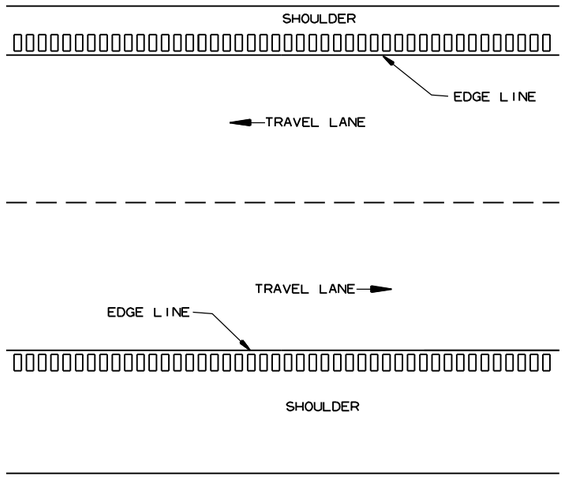

PLAN VIEW

GENERAL NOTES

1. RUMBLE STRIPS SHALL NOT BE INSTALLED ON CURB SECTIONS, BRIDGE DECKS, APPROACH SLABS, INTERSECTING STREETS OR ROADWAYS, RESIDENTIAL OR COMMERCIAL DRIVEWAYS OR ACROSS TRANSVERSE JOINTS OF CONCRETE SHOULDERS.
2. RUMBLE STRIPS SHALL NOT BE INSTALLED ON A PAVED SHOULDER THAT IS USED AS A DECELERATION LANE FOR THE LENGTH DEEMED APPROPRIATE BY THE ENGINEER.
3. THE 4" OFFSET FROM THE EDGE LINE MAY BE INCREASED TO AVOID LONGITUDINAL JOINTS. IN ALL CASES, THE LATERAL DEVIATION FROM THE PLANNED OFFSET SHOULD BE KEPT TO A MINIMUM.
4. RUMBLE STRIPS SHALL BE MEASURED BY THE LINEAR FOOT LONGITUDINALLY ALONG THE SHOULDER. PAYMENT SHALL ONLY INCLUDE THAT PORTION OF THE SHOULDER ON WHICH RUMBLE STRIPS HAVE BEEN CONSTRUCTED. NO MEASUREMENT OR PAYMENT WILL BE MADE FOR GAPS, DRIVEWAYS, TURNOUTS, OR OTHER PUBLIC ROAD INTERSECTIONS WHERE RUMBLE STRIPS HAVE NOT BEEN CONSTRUCTED.
5. THE 3/8" DEPTH SHALL GENERALLY APPLY FOR THE ENTIRE 12" LENGTH. SOME VARIATION TO SUIT SHOULDER SLOPE BREAKS MAY BE NECESSARY.

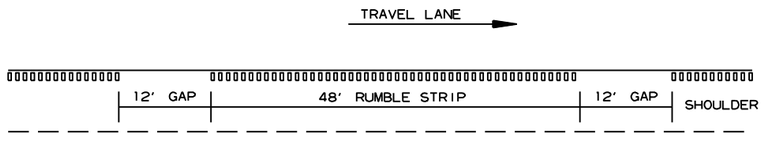

NOTE: GAP PATTERN SHALL BE ADJUSTED BY THE ENGINEER IN THE FIELD ALLOWING FOR DRIVEWAYS TO SERVE AS THE GAP.

DETAIL FOR GAP PATTERN RUMBLE STRIP

STATE OF ARKANSAS
REGISTERED PROFESSIONAL ENGINEER
No. 8940
MARK ASHER

12/12/2023

SPECIAL DETAILS

$FILE$ ...\Drawings\4-SpecialDetails.dgn $DATE$ 11:08:09 AM

DATE REVISED	DATE REVISED	FED.RD. DIST.NO.	STATE	JOB NO.	SHEET NO.	TOTAL SHEETS
		6	ARK.	040781	10	115
		SPECIAL DETAILS				

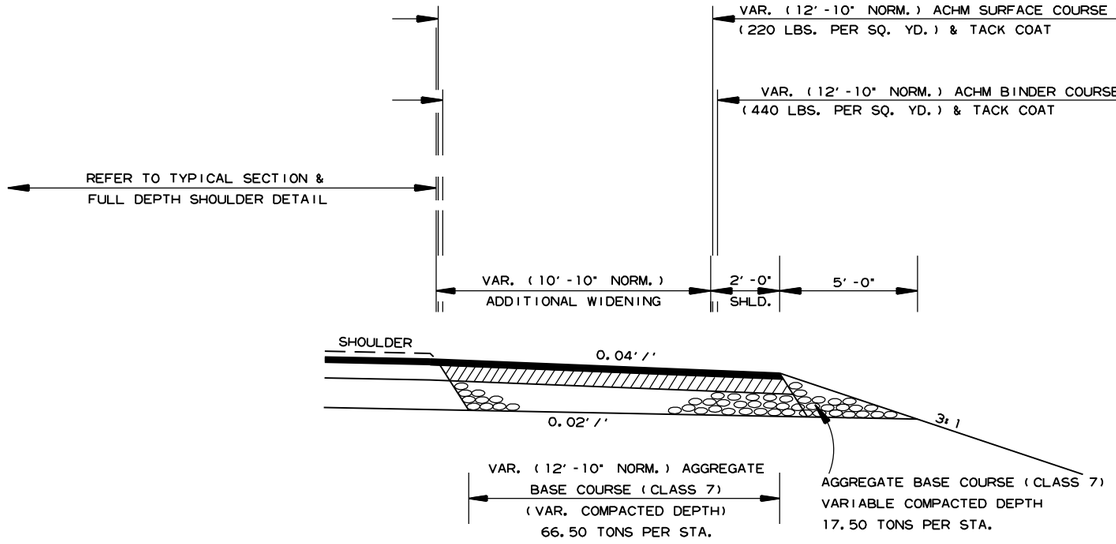

TEMPORARY WIDENING
FOR MAINTENANCE OF TRAFFIC
(SHOWN IN DIRECTION OF STATIONING)

HWY. 71 (NORTHBOUND LANE)
STA. 122+00 TO STA. 126+20
HWY. 71 (SOUTHBOUND LANE)
STA. 99+50 TO STA. 114+57; STA. 115+66 TO STA. 133+00

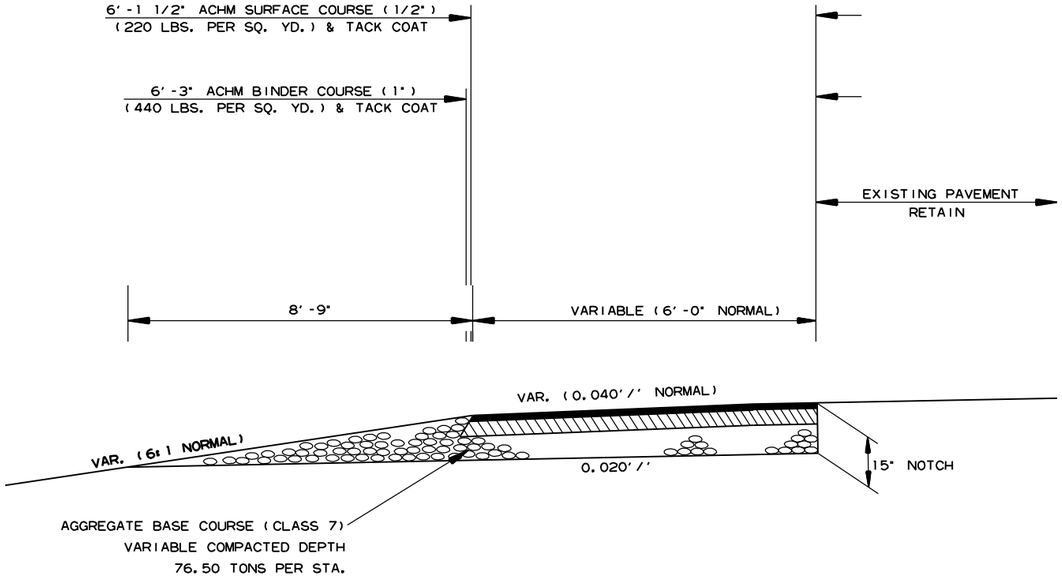

SHOULDER RECONSTRUCTION
FOR MAINTENANCE OF TRAFFIC

HWY. 71 (SOUTHBOUND LANE)
STA. 99+50.00 TO 130+50.00

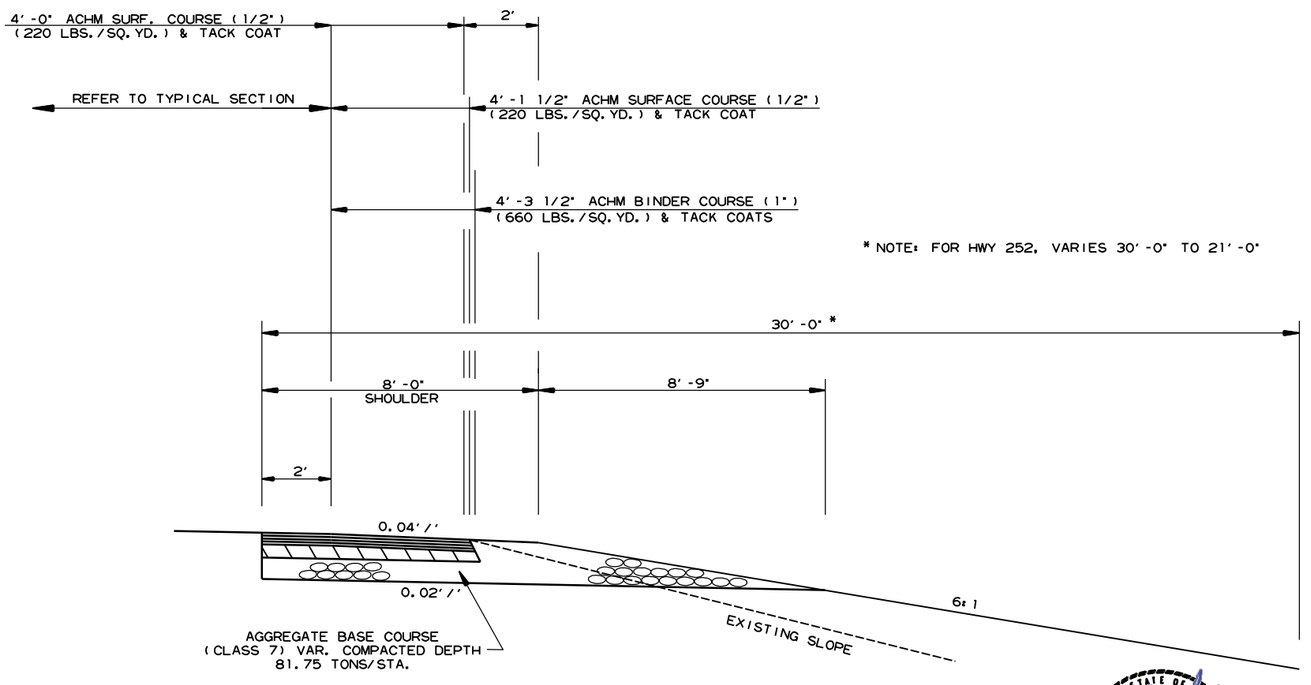

* NOTE: FOR HWY 252, VARIES 30'-0" TO 21'-0"

FULL DEPTH SHOULDER
CONSTRUCTION

HWY. 71 (NORTHBOUND LANE)
STA. 99+50.00 TO STA. 114+65.94
STA. 116+15.31 TO STA. 133+00.00
HWY. 252 (LT. & RT.)
STA. 10+27.59 TO STA. 11+50.00*

STATE OF ARKANSAS
REGISTERED PROFESSIONAL ENGINEER
No. 8940
MARK ASHER

12/12/2023

SPECIAL DETAILS

$FILE$
...\Drawings\4-SpecialDetails.dgn
$DATE$ 11:18:10 AM

DATE REVISED	DATE REVISED	FED.RD. DIST.NO.	STATE	JOB NO.	SHEET NO.	TOTAL SHEETS
		6	ARK.	040781	11	115
		SPECIAL DETAILS				

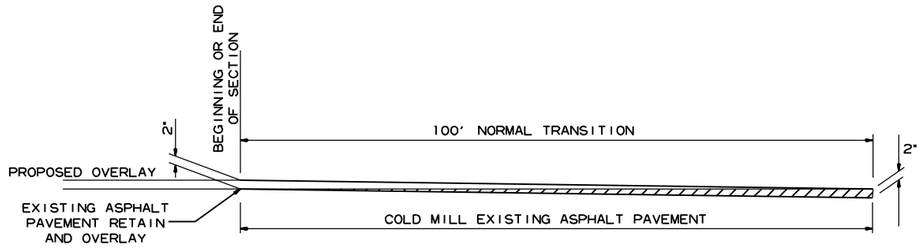

DETAIL FOR TRANSITIONS

HWY. 71
STA. 98+50.00 TO STA. 99+50.00
STA. 132+00.00 TO STA 133+00.00

HWY. 252
STA. 11+50.00 TO STA. 12+50.00

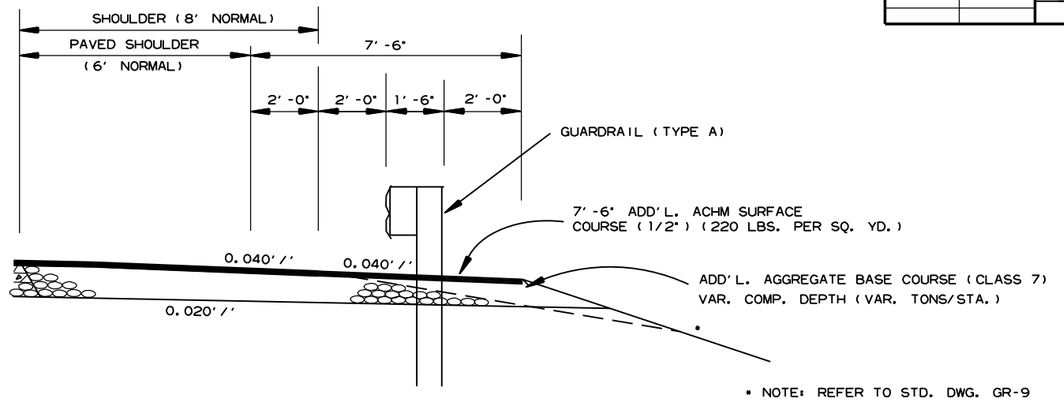

WIDENING FOR GUARDRAIL

* NOTE: REFER TO STD. DWG. GR-9 AND CROSS SECTIONS FOR SLOPE REQUIREMENTS BEHIND GUARDRAIL.

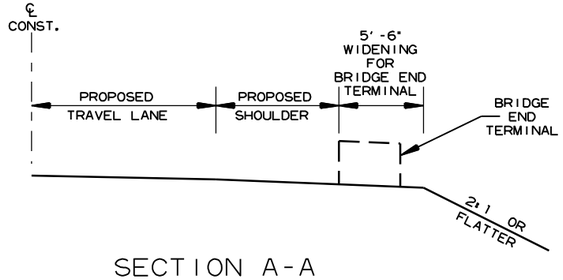

SECTION A-A

NOTE:
ELIMINATE OR MODIFY APPROACH CURB SECTION TO FIT BRIDGE END TERMINAL. NO PAYMENT SHALL BE MADE FOR ELIMINATING OR MODIFYING THIS CURB, BUT SHALL BE CONSIDERED IN PAYMENT MADE FOR APPROACH GUTTERS OF THE TYPE SPECIFIED.

NOTE:
BRIDGE END TERMINAL SHALL CONFORM TO THE FOLLOWING:
-MAXIMUM LENGTH: 20'
-MAXIMUM HEIGHT: 2.75'
-DESIGN SPEED: 60 MPH

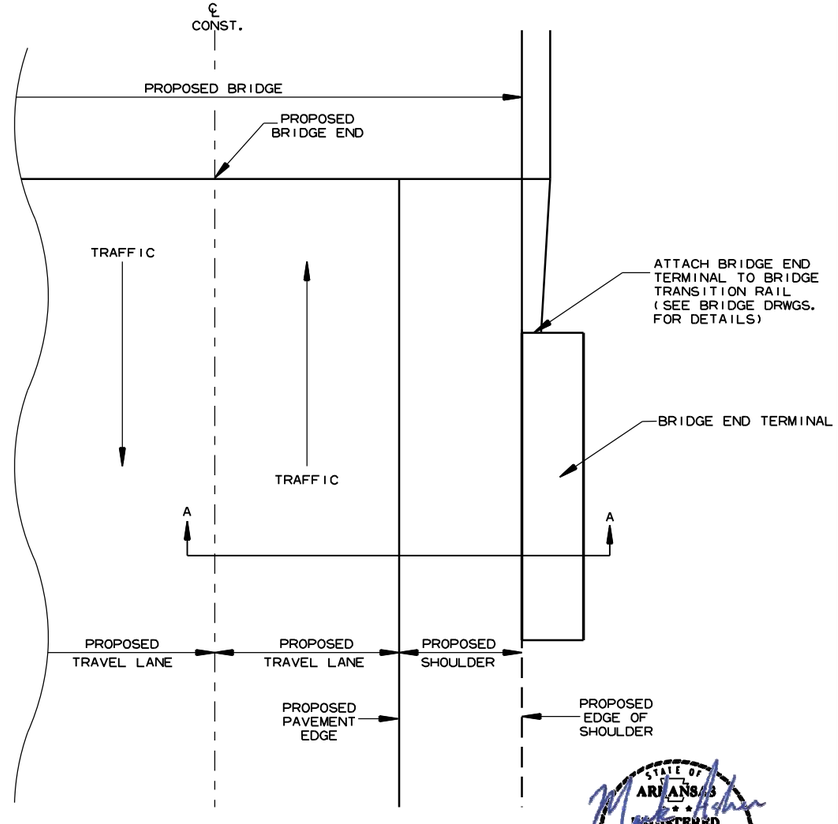

PLAN VIEW

BRIDGE END TERMINAL DETAILS

STATE OF ARKANSAS
REGISTERED PROFESSIONAL ENGINEER
No. 8940
MARK ASHER

12/12/2023

SPECIAL DETAILS

$DATE$ 11/8/10 AM ...\Drawings\4-SpecialDetails.dgn $FILE$

DATE REVISED	DATE REVISED	FED.RD. DIST.NO.	STATE	JOB NO.	SHEET NO.	TOTAL SHEETS
		6	ARK.	040781	12	115
		SPECIAL DETAILS				

INLET WINGWALL TABLE

OVER ALL WIDTH	CLEAR HEIGHT	FOOTING THIK.	WING WALL THK.	BOX SKEW (DEG.)	SLOPE	HDWL LENGTH	HEEL	WALL HEIGHT		WINGWALL ANGLE (DEGREE)		FOOTING WIDTH AT WALL END	WIDTH OF WING FOOTINGS AT HDWL		FOOTING DIMENSION PARALLEL WITH HDWL		LENGTH OF WINGWALLS		LENGTH OF FOOTING HEEL	
								AT HDWL	AT WING END	WING A	WING B		WING A	WING B	WING A	WING B	WING A	WING B	WING A	WING B
OW	H	WB	CW	SK	SL	K	HL	WH1	WH2	AF1	AF2	WE	WF1	WF2	G1	G2	W1	W2	W3	W4
39'-1"	6'-0"	0'-9"	0'-8"	25	3:1	41'-11 1/8"	2'-0"	6'-10"	2'-0"	5	55	3'-2"	3'-3 7/8"	3'-9"	0'-6 7/8"	0'-5 3/8"	14'-6"	25'-0"	18'-0 3/8"	28'-6 3/8"

CLASS "S" CONCRETE (Includes apron)	REINFORCING STEEL (Includes apron and laps if required)
INLET	INLET
CU.YD	LBS.
11.80	1037

WING	F1 BAR SIZE	F1 MAX. SPACING	F1 NO. REQ'D	F1 LENGTHS VARY			F2 BAR SIZE	F2 SPACING	F2 NO. REQ'D	F2 LENGTHS		F3 BAR SIZE	F3 SPACING	F3 NO. REQ'D	F3 LENGTHS		F4 BAR SIZE	F4 SPACING	F4 NO. REQ'D	F4 LENGTHS VARY	F5 BAR SIZE	F5 SPACING	F5 NO. REQ'D	F5 LENGTHS	F6 BAR SIZE	F6 SPACING	F6 NO. REQ'D	F6 LENGTHS VARY			F7 BAR SIZE	F7 NO. REQ'D	F7 LENGTHS	F8 BAR SIZE	F8 SPACING	F8 NO. REQ'D	F8 LENGTHS VARY	F9 BAR SIZE	F9 SPACING	F9 NO. REQ'D	F9 LENGTHS	F10 BAR SIZE	F10 NO. REQ'D	F10 LENGTHS	F11 BAR SIZE	F11 NO. REQ'D	F11 LENGTHS	F12 BAR SIZE	F12 SPACING	F12 NO. REQ'D	F12 LENGTHS		REINF. STEEL QTY. PER WING (LBS)
WING A	4	12	15	L	Min	3'-0"	-	-	-	L	-	-	-	-	L	-	4	18	4	Min	4	18	4	14'-2"	4	18	10	L	Min	4'-9"	4	8	18'-10"	6	18	10	Min	-	-	-	4	2	14'-10"	4	2	15'-5"	6	12	6	L	3'-4"	401
					Max	7'-10"														4'-10"								Max	9'-3"									2'-8"												
				X	Min	0'-9"				X	-				X	-				Max								Min	2'-4"									Max										X	1'-8"	
					Max	0'-11"														9-4"								Max	2'-4"									2'-10"												
				Y	Min	2'-4"				Y	-				Y	-												Min	2'-6"									Max												
					Max	7'-0"																						Max	7'-0"									-												
WING B	4	12	25	L	Min	3'-1"	-	-	-	L	-	-	-	-	L	-	4	18	4	Min	4	18	4	24'-8"	4	18	17	L	Min	4'-8"	4	8	29'-4"	6	18	17	Min	-	-	-	4	2	25'-0"	4	2	27'-5"	6	12	6	L	3'-4"	636
					Max	8'-3"														8'-5"								Max	9'-3"									2'-8"												
				X	Min	0'-9"				X	-				X	-				Max								Min	2'-4"									Max										X	1'-8"	
					Max	1'-4"																						Max	2'-4"									-												
				Y	Min	2'-5"				Y	-				Y	-												Min	2'-5"									Max												
					Max	7'-0"																						Max	7'-0"									-												

MID-SECTION BAR LAP TABLE

# of Long. Laps Req'd.	SL = Section Length
0	< 40.0 ft
1	>40.0 ft - 78.0 ft
2	>78.0 ft - 116.0 ft
3	>116.0 ft - 154.0 ft
4	>154.0 ft - 192.0 ft
5	>192.0 ft - 230.0 ft
6	>230.0 ft - 268.0 ft
7	>268.0 ft - 306.0 ft
8	>306.0 ft -344.0 ft

Min. Bar Lap Length	
#4	1'-9"
#5	2'-2"
#6	2'-7"
#7	3'-6"
#8	4'-7"

Bar Pin Dia. Table	
#4	3"
#5	3 3/4"
#6	4 1/2"
#7	5 1/4"
#8	6"

STATE OF ARKANSAS REGISTERED PROFESSIONAL ENGINEER No. 8940 MARK ASHER

12/12/2023

TABULAR DATA BY: JPC DATE: 8/11/2020
CHECKED BY: JRS DATE: 8/21/2020

This drawing to be used in conjunction with
SHEET 1 OF 4, "GENERAL DETAILS OF R.C. BOX CULVERT", 'GENERAL NOTES & LONGITUDINAL SECTION LENGTH SCHEDULE',
SHEET 3 OF 4, "GENERAL DETAILS OF R.C. BOX CULVERT", 'DETAILS OF MULTI-BARREL R.C. BOX CULVERT',
SHEET 4 OF 4, "GENERAL DETAILS OF R.C. BOX CULVERT", 'DETAILS OF WINGWALLS', and
STANDARD DRAWING RCB-2.
For additional information and outlet sections, see Sheet 2 of 2.

INLET SKEWED END SECTION

SKEW (DEGREE)	SLOPE	DESIGN FILL DEPTH (FT.)	CLEAR SPAN (FT.)	CLEAR HEIGHT (FT.)	SECTION LENGTH	TOP SLAB THK.	HDWL DEPTH	BOTTOM SLAB THK.	SIDE WALL THK.	INTERIOR WALL THK.	OVER ALL WIDTH	OVER ALL HEIGHT	TOP SLAB REINFORCING STEEL								BOTTOM SLAB REINFORCING STEEL							
													"a"				"c"				"d"				"f"			
SK	SL	D	S	H	LL	T	HD	B	C	W	OW	OH	SIZE	SPACING	LENGTHS VARY	NO. REQ'D	SIZE	SPACING	LENGTHS VARY	NO. REQ'D	SIZE	SPACING	LENGTHS VARY	NO. REQ'D	SIZE	SPACING	LENGTHS VARY	NO. REQ'D
25	3	5	9	6	11'-1"	11	3	11	6.5	8	39'-1"	7'-10"	6	9	Max 38'-9"	22	4	4	Max 38'-9"	50	4	6	Max 38'-9"	33	4	8	Max 38'-9"	25
															Min 3'-8"				Min 3'-8"				Min 3'-8"				Min 3'-8"	
															38'-9"	3			38'-9"	6			38'-9"	4			38'-9"	3

SIDE WALL REINFORCING STEEL "f0"				INTERIOR WALL REINFORCING STEEL "f1"				TOP SLAB DISTRIBUTION REINFORCING STEEL "g"				BOTTOM SLAB DISTRIBUTION REINFORCING STEEL "e"				SIDE WALL DISTRIBUTION REINFORCING STEEL "d1"				INTERIOR WALL DISTRIBUTION REINFORCING STEEL "d2"			
SIZE	SPACING	NO. REQ'D	LENGTH	SIZE	SPACING	NO. REQ'D	LENGTH	SIZE	SPACING	NO. REQ'D	LENGTHS VARY	SIZE	SPACING	NO. REQ'D	LENGTHS VARY	SIZE	SPACING	NO. REQ'D	LENGTH	SIZE	SPACING	NO. REQ'D	LENGTH
5	7	39	7'-6"	4	12	74	7'-6"	4	10	95	Max 20'-1"	4	10	95	Max 20'-1"	4	12	6	LONG 19'-11"	4	12	12	LONG 15'-6"
											Min 1'-10"				Min 1'-10"			6	SHORT 2'-0"			12	MID 10'-11"
																						12	SHORT 6'-5"

"k1" HDWL BARS			"k2" HDWL BARS			"h" HDWL BARS				
SIZE	LENGTH	NO. REQ'D	SIZE	LENGTH	NO. REQ'D	SIZE	LENGTH	Y	NO. REQ'D	
4	22'-3"	12	4	22'-3"	12	4	1'-10"	0'-10"	45	

CLASS "S" CONCRETE (Includes HDWL)	REINFORCING STEEL (GR 60) (Includes HDWL)
CU. YDS.	LBS.
37.97	5571

① Any Bar Lap Required for the Skewed End Section shall be considered subsidiary to the item "Reinforcing Steel - Roadway (Grade 60)."

INLET SLOPE SECTION(S)

R.C. BOX SECTION	DESIGN FILL DEPTH (FT.)	CLEAR SPAN (FT.)	CLEAR HEIGHT (FT.)	TOP SLAB THK.	BOTTOM SLAB THK	SIDE WALL THK	INTERIOR WALL THK.	OVER ALL WIDTH	OVER ALL HEIGHT	SECTION LENGTH (FT.)	TOP SLAB REINFORCING STEEL LENGTH = OW - 4" + BENDS								BOTTOM SLAB REINFORCING STEEL LENGTH = OW - 4" + BENDS								SIDE WALL REINFORCING STEEL "f0" LENGTH = OH - 4"				INTERIOR WALL REINFORCING STEEL "f1" LENGTH = OH - 4"				TOP SLAB DISTRIBUTION REINF. STEEL "g" LENGTH = SL			BOTTOM SLAB DISTRIBUTION REINF. STEEL "e" LENGTH = SL			SIDE WALL DISTRIBUTION REINF. STEEL "d1" LENGTH = SL			INTERIOR WALL DISTRIBUTION REINF. STEEL "d2" LENGTH = SL		
											"a"		Bent "b"		"c"				"d"		Bent "b1"		"f"																									
	D	S	H	T	B	C	W	OW	OH	SL	SIZE	L	SIZE	L	SIZE	L	SPACING	NO. REQ'D	SIZE	L	SIZE	L	SIZE	L	SPACING	NO. REQ'D	SIZE	SPACING	NO. REQ'D	LENGTH	SIZE	SPACING	NO. REQ'D	LENGTH	SIZE	SPACING	NO. REQ'D	SIZE	SPACING	NO. REQ'D	SIZE	SPACING	NO. REQ'D	SIZE	SPACING	NO. REQ'D
A	5	9	6	11	11	6.5	8	39'-1"	7'-10"	72.83	4	38'-9"	7	39'-8"	4	38'-9"	16	54	4	38'-9"	4	39'-7"	4	38'-9"	12	72	5	7	248	7'-6"	4	12	432	7'-6"	4	10	95	4	10	95	4	12	12	4	12	36

HDWL DEPTH.	ADDITIONAL REINF. FOR HDWL	"h" HDWL BARS			
HD	LBS.	SIZE	Y	LENGTH	NO. REQ'D
3"	69	4	1'-2"	2'-2"	53

CLASS "S" CONCRETE	REINFORCING STEEL (GR. 60)
CU. YDS.	LBS.
TOTAL	
0.48	146

CLASS "S" CONCRETE	REINFORCING STEEL (GR. 60)
CU. YDS.	LBS.
243.19	28954

Design Fill Depth	Range of Actual Fill Depth
2	0.0 ft - 2.0 ft
5	>2.0 ft - 5.0 ft
10	>5.0 ft - 10.0 ft
15	>10.0 ft - 15.0 ft
20	>15.0 ft - 20.0 ft
25	>20.0 ft - 25.0 ft
30	>25.0 ft - 30.0 ft
35	>30.0 ft - 35.0 ft
40	>35.0 ft - 40.0 ft

Data shown for Mid-Section, Slope Section(s), and Skewed End Section is based on the design fill depth shown in the table, see PLAN AND PROFILE SHEETS for actual fill depth.

SHEET 1 OF 2
DETAILS OF R.C. BOX CULVERT
QUADRUPLE BARREL BOX CULVERT
Sta. 123+97

SPECIAL DETAILS

Ver. Ui7 FILENAME

DATE REVISED	DATE REVISED	FED.RD. DIST.NO.	STATE	JOB NO.	SHEET NO.	TOTAL SHEETS
		6	ARK.	040781	13	115
		SPECIAL DETAILS				

STATE OF ARKANSAS
REGISTERED PROFESSIONAL ENGINEER
No. 8940
MARK ASHER

12/12/2023

TABULAR DATA BY: JPC DATE: 8/11/2020
CHECKED BY: JRS DATE: 8/21/2020

OUTLET WINGWALL TABLE

OVER ALL WIDTH	CLEAR HEIGHT	FOOTING THK.	WING WALL THK.	BOX SKEW (DEG.)	SLOPE	HDWL LENGTH	HEEL	WALL HEIGHT AT HDWL	WALL HEIGHT AT WING END	WINGWALL ANGLE (DEGREE) WING A	WINGWALL ANGLE (DEGREE) WING B	FOOTING WIDTH AT WALL END	WIDTH OF WING FOOTINGS AT HDWL WING A	WIDTH OF WING FOOTINGS AT HDWL WING B	FOOTING DIMENSION PARALLEL WITH HDWL WING A	FOOTING DIMENSION PARALLEL WITH HDWL WING B	LENGTH OF WINGWALLS WING A	LENGTH OF WINGWALLS WING B	LENGTH OF FOOTING HEEL WING A	LENGTH OF FOOTING HEEL WING B
OW	H	WB	CW	SK	SL	K	HL	WH1	WH2	AF1	AF2	WE	WF1	WF2	G1	G2	W1	W2	W3	W4
39'-1"	6'-0"	0'-9"	0'-8"	25	3:1	41'-11 1/8"	2'-0"	6'-10"	2'-0"	5	55	3'-2"	3'-3 7/8"	3'-9"	0'-6 7/8"	0'-5 3/8"	14'-6"	25'-0"	18'-0 3/8"	28'-6 3/8"

CLASS "S" CONCRETE (Includes apron)	REINFORCING STEEL (Includes apron and laps if required)
OUTLET	OUTLET
CU.YD	LBS.
13.28	1037

WING	F1 BAR SIZE	F1 MAX. SPACING	F1 NO. REQ'D	F1 LENGTHS VARY			F2 BAR SIZE	F2 SPACING	F2 NO. REQ'D	F2 LENGTHS	F3 BAR SIZE	F3 SPACING	F3 NO. REQ'D	F3 LENGTHS	F4 BAR SIZE	F4 SPACING	F4 NO. REQ'D	F4 LENGTHS VARY	F5 BAR SIZE	F5 SPACING	F5 NO. REQ'D	F5 LENGTHS
WING A	4	12	15	L	Min	3'-0"	-	-	-	-	-	-	-	-	4	18	4	Min	4	18	4	14'-2"
					Max	7'-10"												4'-10"				
				X	Min	0'-9"												Max				
					Max	0'-11"												9'-4"				
				Y	Min	2'-4"																
					Max	7'-0"																
WING B	4	12	25	L	Min	3'-1"	-	-	-	-	-	-	-	-	4	18	4	Min	4	18	4	24'-8"
					Max	8'-3"												8'-5"				
				X	Min	0'-9"												Max				
					Max	1'-4"												16'-3"				
				Y	Min	2'-5"																
					Max	7'-0"																

WING	F6 BAR SIZE	F6 SPACING	F6 NO. REQ'D	F6 LENGTHS VARY			F7 BAR SIZE	F7 NO. REQ'D	F7 LENGTHS	F8 BAR SIZE	F8 SPACING	F8 NO. REQ'D	F8 LENGTHS VARY	F9 BAR SIZE	F9 SPACING	F9 NO. REQ'D	F9 LENGTHS	F10 BAR SIZE	F10 NO. REQ'D	F10 LENGTHS	F11 BAR SIZE	F11 NO. REQ'D	F11 LENGTHS	F12 BAR SIZE	F12 SPACING	F12 NO. REQ'D	F12 LENGTHS		REINF. STEEL QTY. PER WING (LBS)
WING A	4	18	10	L	Min	4'-9"	4	8	13'-10"	6	18	10	Min	-	-	-	-	4	2	14'-10"	4	2	15'-5"	6	12	6	L	3'-4"	401
					Max	9'-3"							2'-8"																
				X	Min	2'-4"																						X	1'-8"	
					Max	2'-4"							Max																
				Y	Min	2'-6"							-																
					Max	7'-0"																							
WING B	4	18	17	L	Min	4'-8"	4	8	29'-4"	6	18	17	Min	-	-	-	-	4	2	25'-0"	4	2	27'-5"	6	12	6	L	3'-4"	636
					Max	9'-3"							2'-8"																
				X	Min	2'-4"																						X	1'-8"	
					Max	2'-4"							Max																
				Y	Min	2'-5"							3'-3"																
					Max	7'-0"																							

Min. Bar Lap Length	
#4	1'-9"
#5	2'-2"
#6	2'-7"
#7	3'-6"
#8	4'-/"

Bar Pin Dia. Table	
#4	3"
#5	3 3/4"
#6	4 1/2"
#7	5 1/4"
#8	6"

① Any Bar Lap Required for the Skewed End Section shall be considered subsidiary to the item "Reinforcing Steel - Roadway (Grade 60)."

OUTLET SKEWED END SECTION

| SKEW (DEGREE) | SLOPE | DESIGN FILL DEPTH (FT.) | CLEAR SPAN (FT.) | CLEAR HEIGHT (FT.) | SECTION LENGTH | TOP SLAB THK. | HDWL DEPTH | BOTTOM SLAB THK. | SIDE WALL THK. | INTERIOR WALL THK. | OVER ALL WIDTH | OVER ALL HEIGHT | TOP SLAB REINFORCING STEEL "a" SIZE | "a" SPACING | "a" LENGTHS VARY | "a" NO. REQ'D | TOP SLAB REINFORCING STEEL "c" SIZE | "c" SPACING | "c" LENGTHS VARY | "c" NO. REQ'D | BOTTOM SLAB REINFORCING STEEL "d" SIZE | "d" SPACING | "d" LENGTHS VARY | "d" NO. REQ'D | BOTTOM SLAB REINFORCING STEEL "f" SIZE | "f" SPACING | "f" LENGTHS VARY | "f" NO. REQ'D | SIDE WALL REINFORCING STEEL "f0" SIZE | "f0" SPACING | "f0" NO. REQ'D | "f0" LENGTH | INTERIOR WALL REINFORCING STEEL "f1" SIZE | "f1" SPACING | "f1" NO. REQ'D | "f1" LENGTH | TOP SLAB DISTRIBUTION REINFORCING STEEL "g" SIZE | "g" SPACING | "g" NO. REQ'D | "g" LENGTHS VARY | BOTTOM SLAB DISTRIBUTION REINFORCING STEEL "e" SIZE | "e" SPACING | "e" NO. REQ'D | "e" LENGTHS VARY | SIDE WALL DISTRIBUTION REINFORCING STEEL "d1" SIZE | "d1" SPACING | "d1" NO. REQ'D | "d1" LENGTH | INTERIOR WALL DISTRIBUTION REINFORCING STEEL "d2" SIZE | "d2" SPACING | "d2" NO. REQ'D | "d2" LENGTH |
|---|---|---|---|---|---|---|---|---|---|---|---|---|---|---|---|---|---|---

DATE REVISED	DATE REVISED	FED.RD. DIST.NO.	STATE	JOB NO.	SHEET NO.	TOTAL SHEETS
		6	ARK.	040781	14	115
		SPECIAL DETAILS				

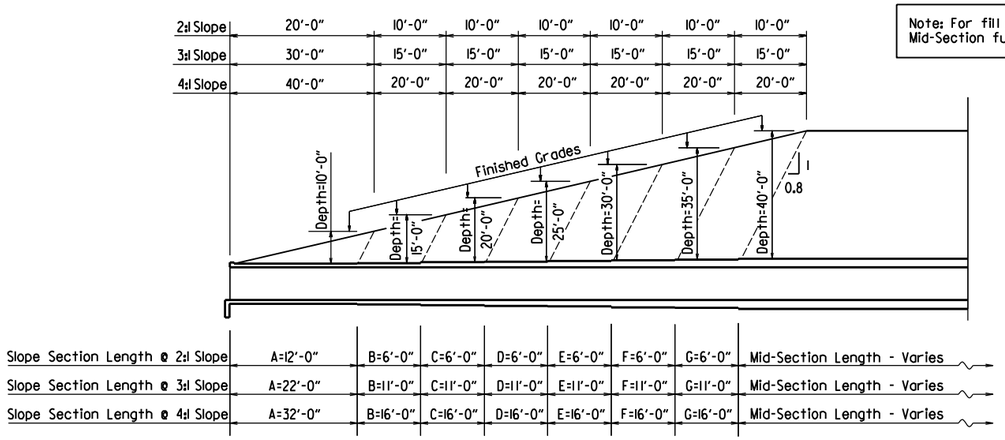

Note: For fill depths 10' and under, use Mid-Section full length of box culvert.

LONGITUDINAL SECTION LENGTH SCHEDULE FOR VARYING FILL DEPTHS OVER 10'

Lengths for Non-Skewed Boxes

*LL = Skewed End Section Length - See "Skewed End Section Details" Length LL varies with skew angle, overall box width and fill depth and may eliminate the need for some slope section lengths as shown.

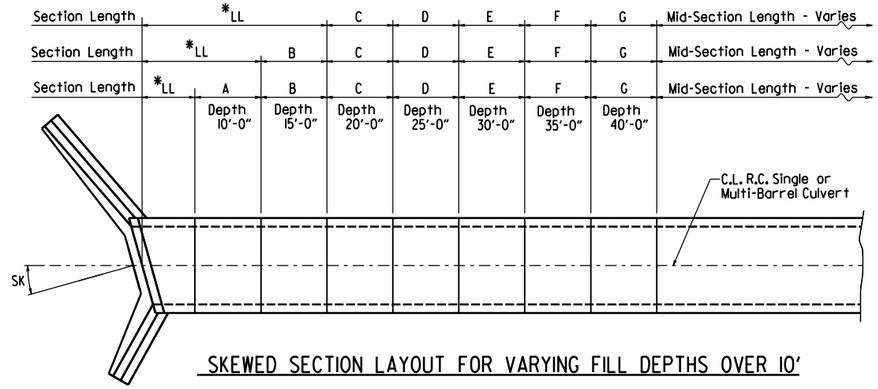

SKEWED SECTION LAYOUT FOR VARYING FILL DEPTHS OVER 10'

STATE OF ARKANSAS REGISTERED PROFESSIONAL ENGINEER No. 8940 MARK ASHER

12/12/2023

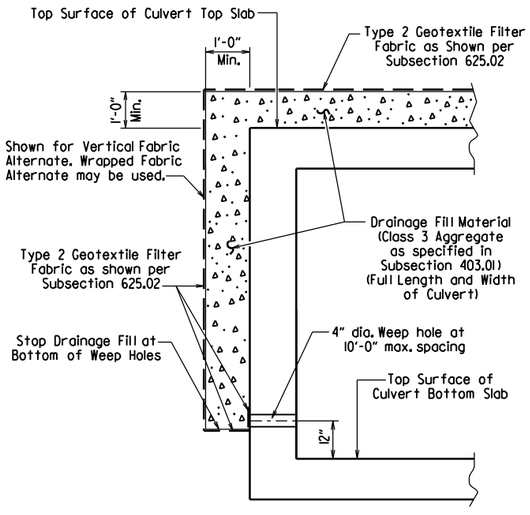

CULVERT DRAINAGE DETAIL FOR ROCK FILL

This detail shall be used when rock fill is specified for embankment construction.

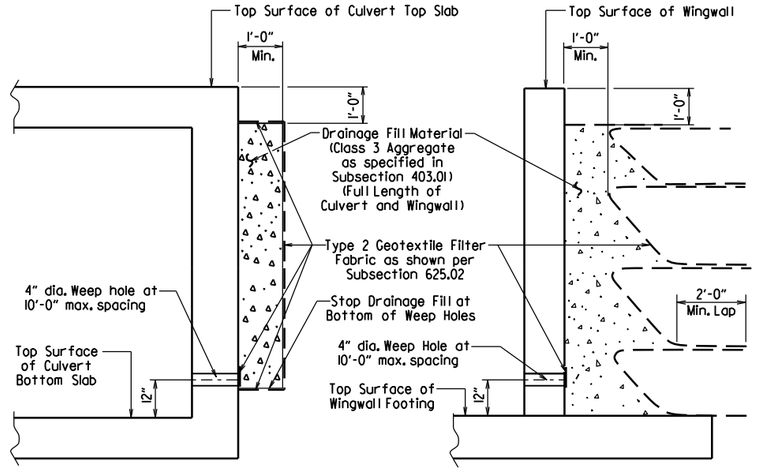

For Details of Excavation and Pay Limits, see Standard Drawing RCB-2.

VERTICAL FABRIC ALTERNATE
(Shown for Culvert, Similar for Wingwall)

WRAPPED FABRIC ALTERNATE
(Shown for Wingwall, Similar for Culvert)

WINGWALL & CULVERT DRAINAGE DETAIL

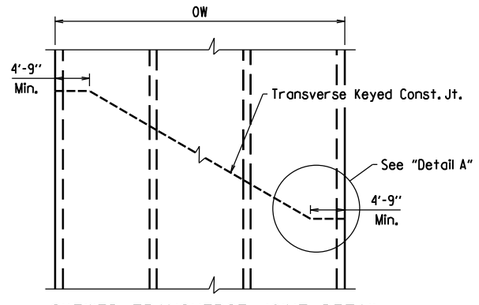

SKEWED TRANSVERSE JOINT DETAIL

This detail shall be used to construct a skewed transverse joint only for Multi-Barrel Culverts and only when required by the Maintenance of Traffic Plans. Otherwise, transverse joints should be made normal to the centerline of the barrel.

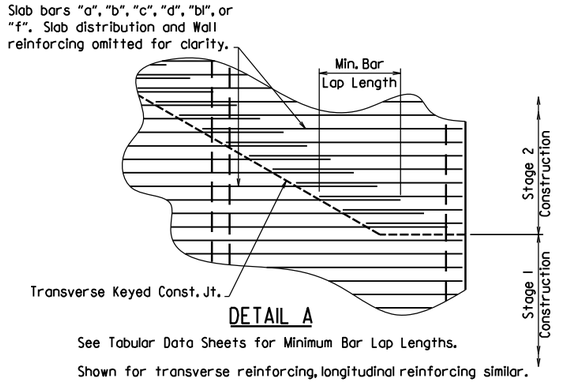

DETAIL A

See Tabular Data Sheets for Minimum Bar Lap Lengths.

Shown for transverse reinforcing, longitudinal reinforcing similar.

GENERAL NOTES:

CONSTRUCTION SPECIFICATIONS: Arkansas State Highway and Transportation Department Standard Specifications for Highway Construction (2014 edition) with applicable Supplemental Specifications and Special Provisions. Section and Subsection refer to the Standard Construction Specifications unless otherwise noted in the Plans.

DESIGN SPECIFICATIONS: AASHTO LRFD Bridge Design Specifications, Fifth Edition (2010) with 2010 interim revisions.

LIVE LOADING: HL-93

All concrete shall be Class S with a minimum 28-day compressive strength of 3,500 psi and shall be poured in the dry. All exposed corners to have ¾" chamfers.

Reinforcing Steel shall be Grade 60 (yield strength = 60,000 psi) conforming to AASHTO M31 or M322, Type A, with mill test reports.

Reinforcing Steel Tolerances: The tolerances for reinforcing steel shall meet those listed in 'Manual of Standard Practice' published by Concrete Reinforcing Steel Institute (CRSI) except that the tolerance for truss bars such as Figure 3 on page 7-4 of the CRSI Manual shall be minus zero to plus 1/2 inch.

Excavation and backfilling shall be in accordance with the requirements of Section 801.

Membrane Waterproofing shall conform to the requirements of Section 815. Membrane Waterproofing shall be Type C and as directed by the Engineer applied to all construction joints in the top slab and the sidewalls of R.C. Box culverts and to the construction joint between wingwalls and R.C. Box culvert walls.

Weep Holes in box culvert walls shall have a maximum horizontal spacing of 10'-0" and shall be spaced to clear all reinforcing steel. The drain opening shall be 4" diameter and shall be placed 12" above the top of the bottom slab.

Weep Holes in wingwalls shall have a maximum horizontal spacing of 10'-0" and shall be spaced to clear all reinforcing steel. There shall be a minimum of two (2) weep holes in each wingwall. The drain opening shall be 4" diameter and shall be placed 12" above the top of the wingwall footing.

The barrel components of the culvert may be constructed using continuous pours. For longer culvert construction, the Contractor may use multiple pours with transverse construction joints spaced a minimum of 50 feet apart unless superseded by stage construction or site constraints as approved by the Engineer. Construction joints between footings and walls shall be made only where shown in the Plans. Joints shall be keyed and shall be normal to the centerline of barrel except as noted. Reinforcing shall be continuous through joints unless noted otherwise. Reinforcing through stage construction joints shall provide the minimum bar lap length shown on the Tabular Data Sheets. All longitudinal construction joints shall be submitted to the Engineer for approval.

Membrane Waterproofing, Weep Holes, Geotextile Filter Fabric, and Drainage Fill Material will not be paid for directly but shall be considered subsidiary to Class S Concrete.

When the top slab of the box culvert serves as finished roadway surface, curing and finishing shall be in accordance with subsections 802.17 and 802.20 for bridge roadway surface and a tine finish shall be applied in accordance with subsection 802.19 for Class 5 Tined Bridge Roadway Surface Finish. Curing and finishing shall not be paid for directly, but shall be considered incidental to the item "Class S Concrete-Roadway". Class 1 Protective Surface Treatment shall be applied to the roadway surface and this work shall be paid for under the unit price bid for "Class 1 Protective Surface Treatment".

When precast reinforced concrete box culverts are substituted for cast in place box culverts, they shall be manufactured according to ASTM C 1577 and meet the requirements of Section 607. When the top slab of the box culvert serves as the finished roadway surface, a precast reinforced concrete box culvert substitution is not allowed.

SHEET 1 OF 4

GENERAL DETAILS OF R.C. BOX CULVERT

GENERAL NOTES & LONGITUDINAL SECTION LENGTH SCHEDULE

SPECIAL DETAILS

V_LI17 FILENAME

DATE REVISED	DATE REVISED	FED.RD. DIST.NO.	STATE	JOB NO.	SHEET NO.	TOTAL SHEETS
		6	ARK.	040781	15	115
		SPECIAL DETAILS				

Note: When top slab of culvert serves as finished roadway surface, see General Notes on Sheet 1 of 4.

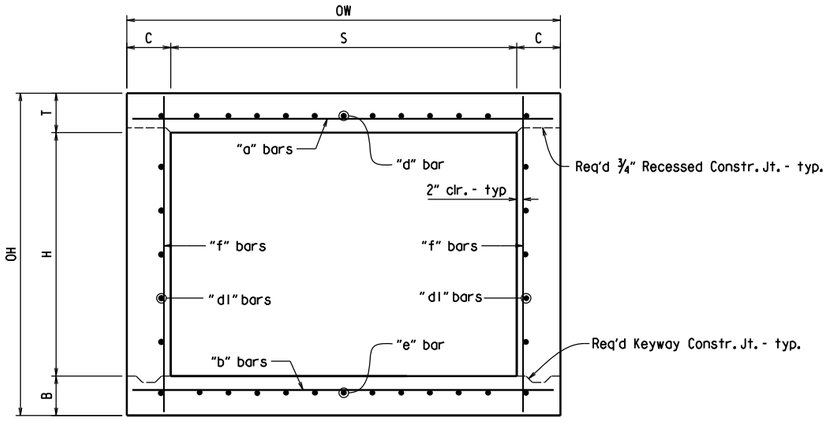

TYPICAL SECTION M-M

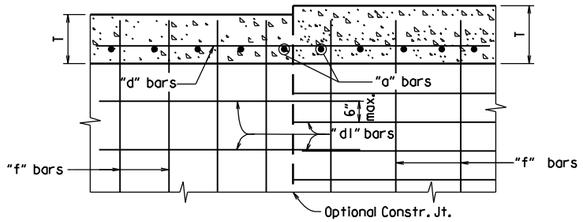

Longitudinal Bar Spacing at individual sections shall be maintained, which may result in noncontact bar laps.

LONGITUDINAL LAP DETAIL AT CHANGE IN SECTIONS

TOP SLAB SHOWN, BOTTOM SLAB SIMILAR

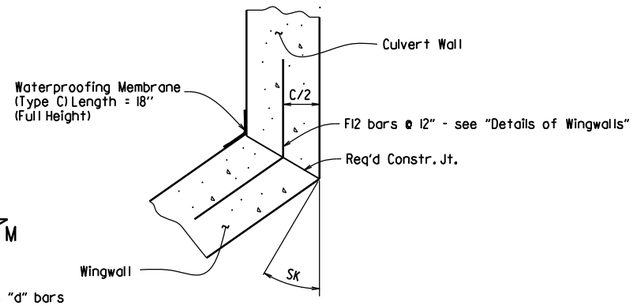

WINGWALL ATTACHMENT

See "Details of Wingwalls" for additional information and wingwall details.

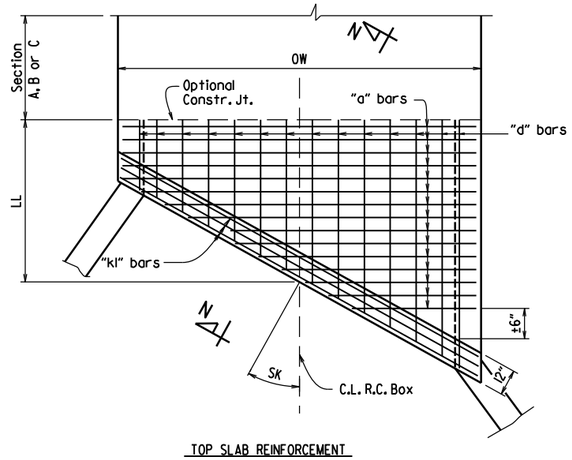

TOP SLAB REINFORCEMENT

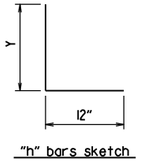

"h" bars sketch

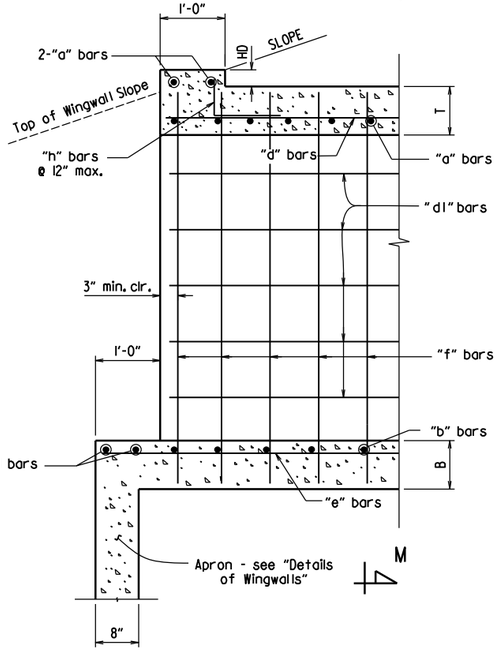

PART LONGITUDINAL SECTION

(Non-Skewed Ends)

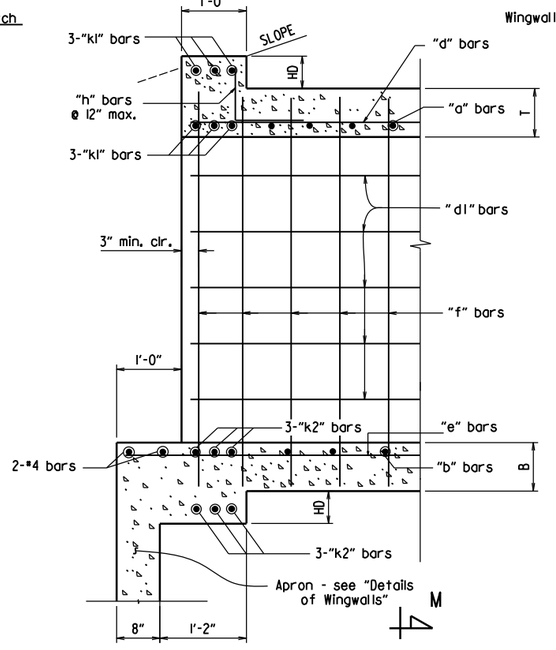

PART LONGITUDINAL SECTION N-N

(Skewed Ends)

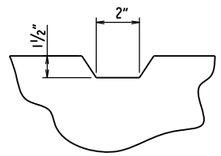

TYPICAL KEYWAY DETAIL

(All Construction Joints)

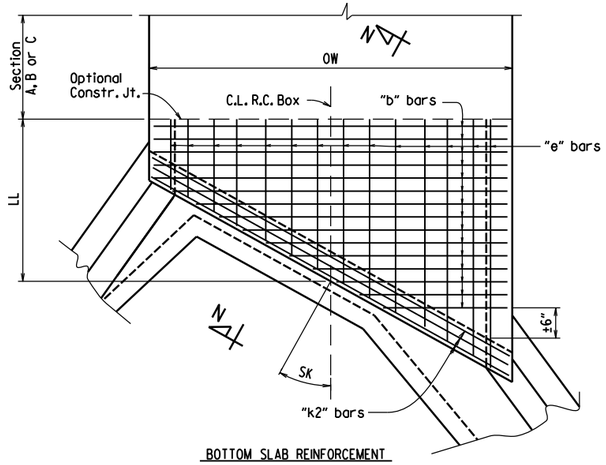

BOTTOM SLAB REINFORCEMENT

SKEWED END SECTION DETAILS

SHEET 2 OF 4
GENERAL DETAILS OF R.C. BOX CULVERT

DETAILS OF SINGLE BARREL R.C. BOX CULVERT

SPECIAL DETAILS

STATE OF ARKANSAS REGISTERED PROFESSIONAL ENGINEER No. 8940 MARK ASHER

12/12/2023

V_LI17 FILENAME

DATE REVISED	DATE REVISED	FED.RD. DIST.NO.	STATE	JOB NO.	SHEET NO.	TOTAL SHEETS
		6	ARK.	040781	16	115
		SPECIAL DETAILS				

① 2" clr. for fill depth (D) greater than 2 ft.
2½" clr. for fill depth (D) equal to or less than 2 ft.

Note: When top slab of culvert serves as finished roadway surface, see General Notes on Sheet 1 of 4.

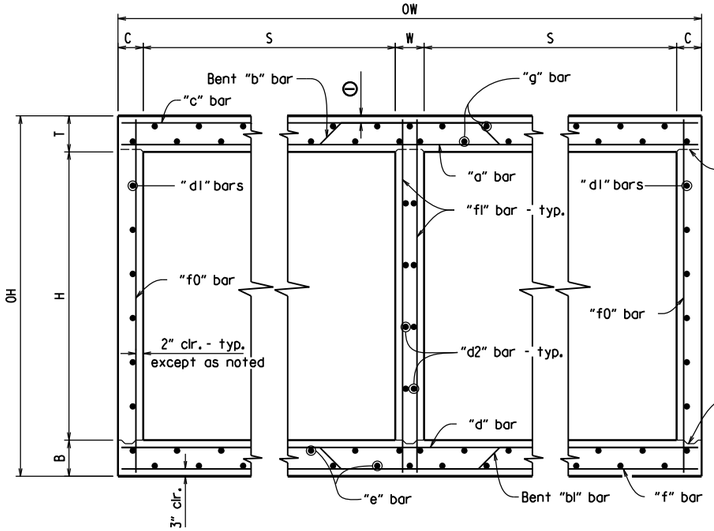

TYPICAL SECTION M-M

Top Slab
Straight "c" bars shall alternate with Bent "b" bars in top.
Straight "a" bars shall alternate with Bent "b" bars in bottom.

Bottom Slab
Straight "d" bars shall alternate with Bent "bl" bars in top.
Straight "f" bars shall alternate with Bent "bl" bars in bottom.

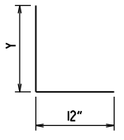

"h" bars sketch

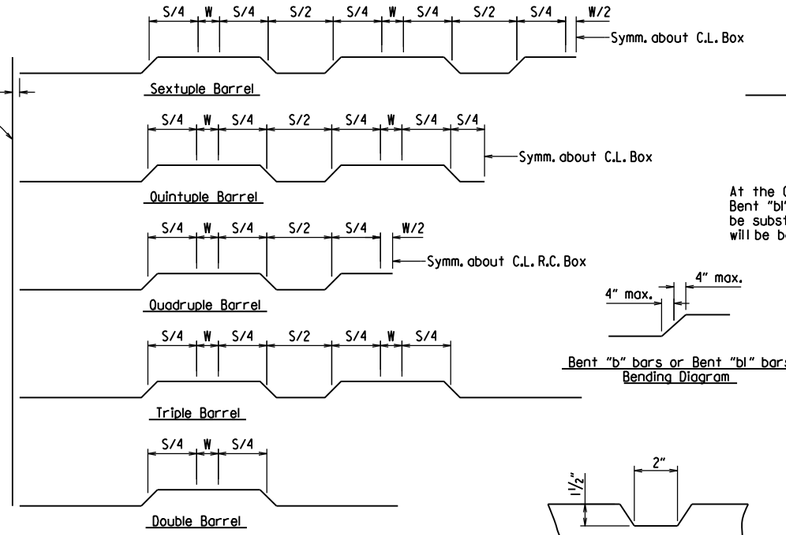

Bent "b" bars or Bent "bl" bars sketch

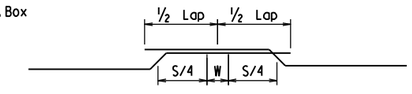

Lap Detail
For Bent "b" bars and Bent "bl" bars

Bent "b" bars or Bent "bl" bars Bending Diagram

At the Contractor's option in lieu of providing Bent "b" or Bent "bl" bars, one bar top and bottom of equivalent size may be substituted for each bent bar. Payment for the reinforcing will be based on the weight of the "b" or "bl" bar.

TYPICAL KEYWAY DETAIL
(All Construction Joints)

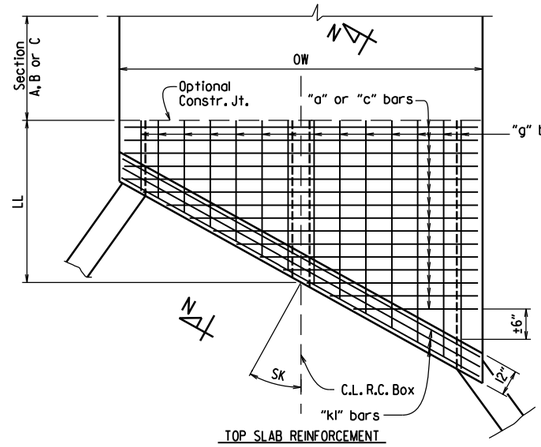

TOP SLAB REINFORCEMENT
Straight "c" bars in top.
Straight "a" bars in bottom.

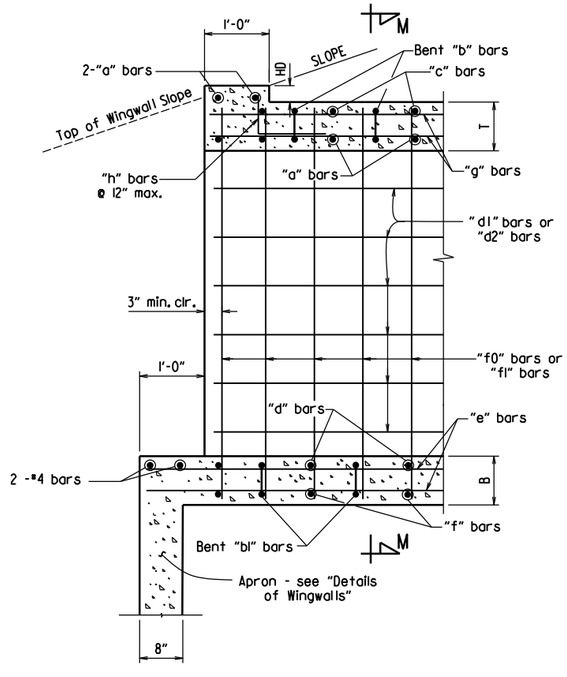

PART LONGITUDINAL SECTION
(Non-Skewed Ends)

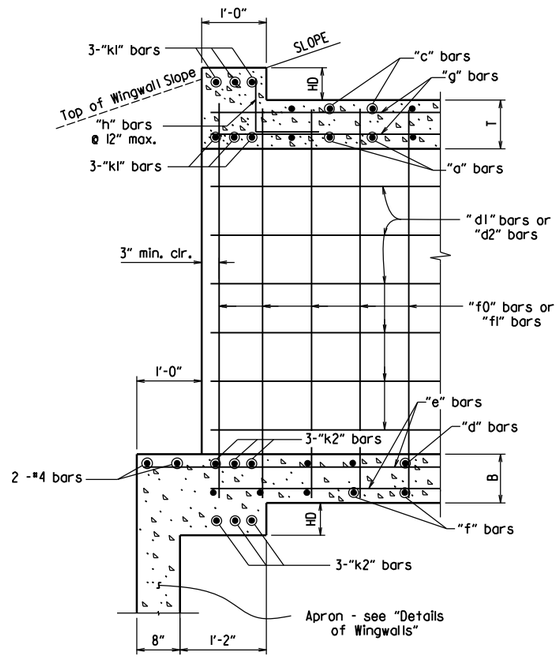

PART LONGITUDINAL SECTION N-N
(Skewed Ends)

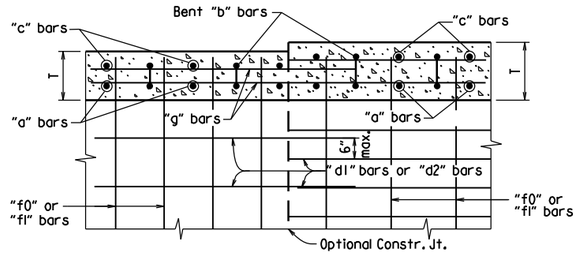

Longitudinal Bar Spacing at individual sections shall be maintained, which may result in noncontact bar laps.

LONGITUDINAL LAP DETAIL AT CHANGE IN SECTIONS
TOP SLAB SHOWN, BOTTOM SLAB SIMILAR

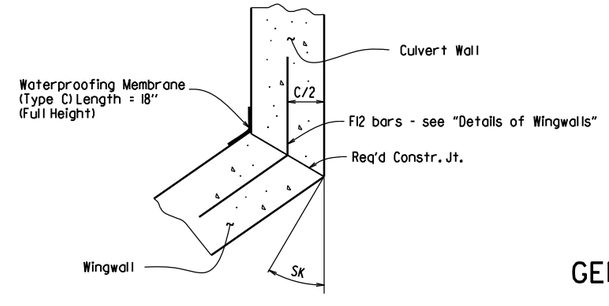

WINGWALL ATTACHMENT
See "Details of Wingwalls" for additional information and wingwall details.

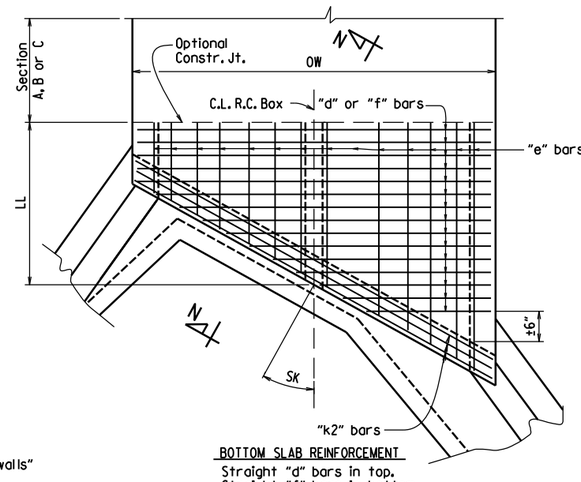

BOTTOM SLAB REINFORCEMENT
Straight "d" bars in top.
Straight "f" bars in bottom.

SKEWED END SECTION DETAILS

SHEET 3 OF 4
GENERAL DETAILS OF R.C. BOX CULVERT

DETAILS OF MULTI-BARREL R.C. BOX CULVERT

SPECIAL DETAILS

STATE OF ARKANSAS
REGISTERED PROFESSIONAL ENGINEER
No. 8940
MARK ASHER
12/12/2023

V LI17 FILENAME

DATE REVISED	DATE REVISED	FED.RD. DIST.NO.	STATE	JOB NO.	SHEET NO.	TOTAL SHEETS
		6	ARK.	040781	17	115
		SPECIAL DETAILS				

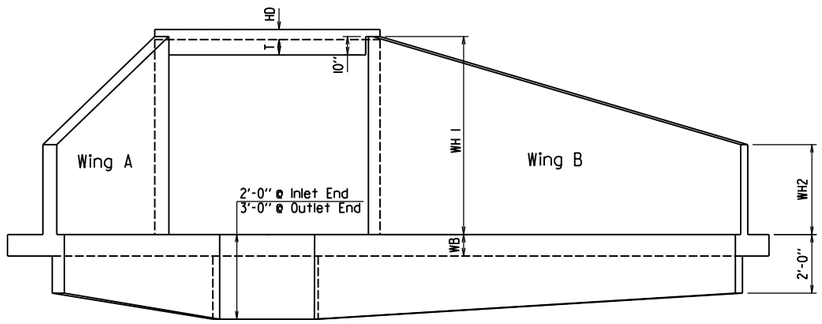

END ELEVATION

Flared Wingwalls Shown

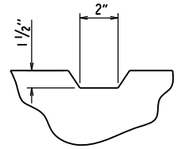

TYPICAL KEYWAY DETAIL

All Construction Joints

PART PLAN - FLARED WINGWALLS

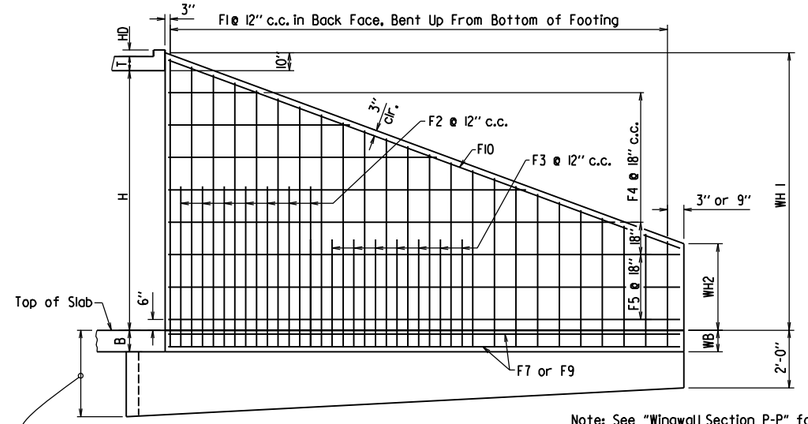

WINGWALL ELEVATION

Showing Back Face Reinforcement

Note: See "Wingwall Section P-P" for additional details and reinforcing.

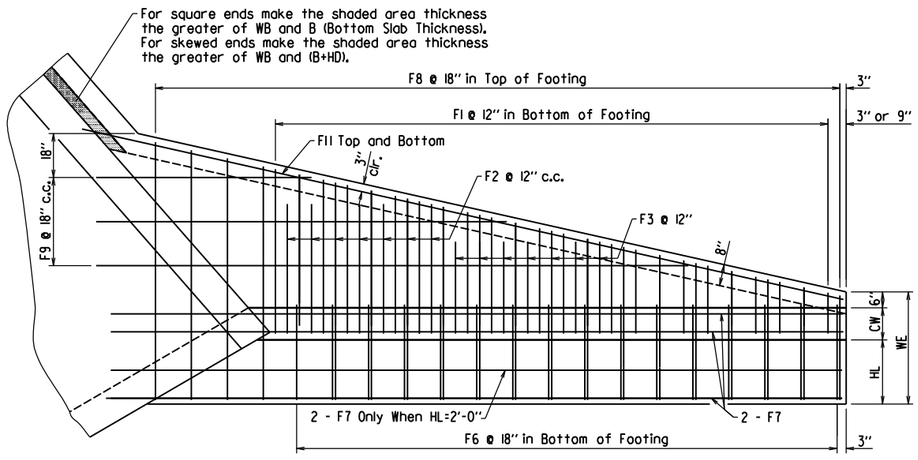

PLAN - FLARED WINGWALLS

Showing Footing Reinforcement

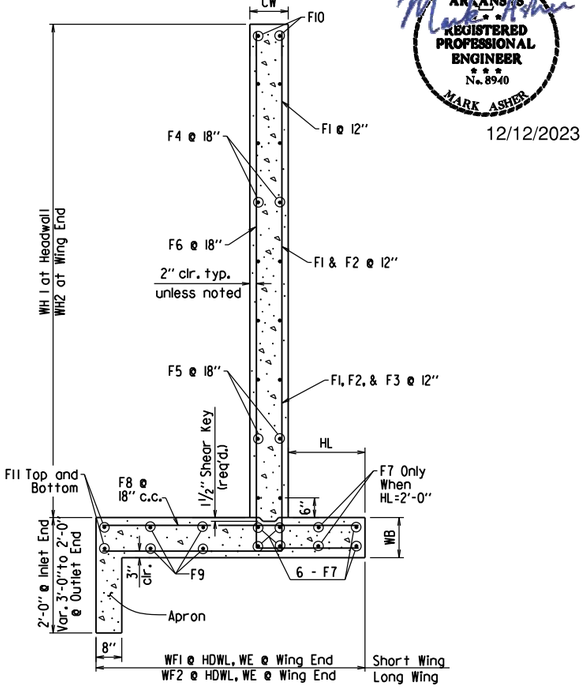

WINGWALL SECTION P-P

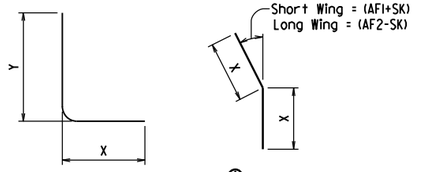

F1, F2, F3, & F6 BARS

①F12 BAR

①F12 is a straight bar for parallel wingwalls

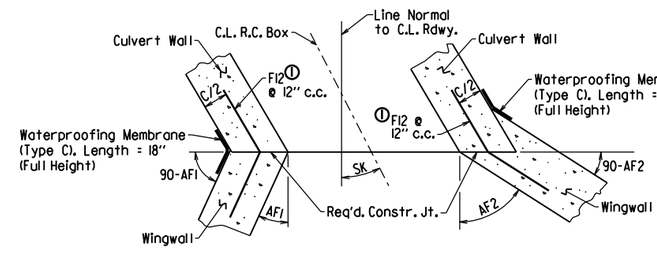

CONSTRUCTION JOINTS

Flared Wingwalls Shown

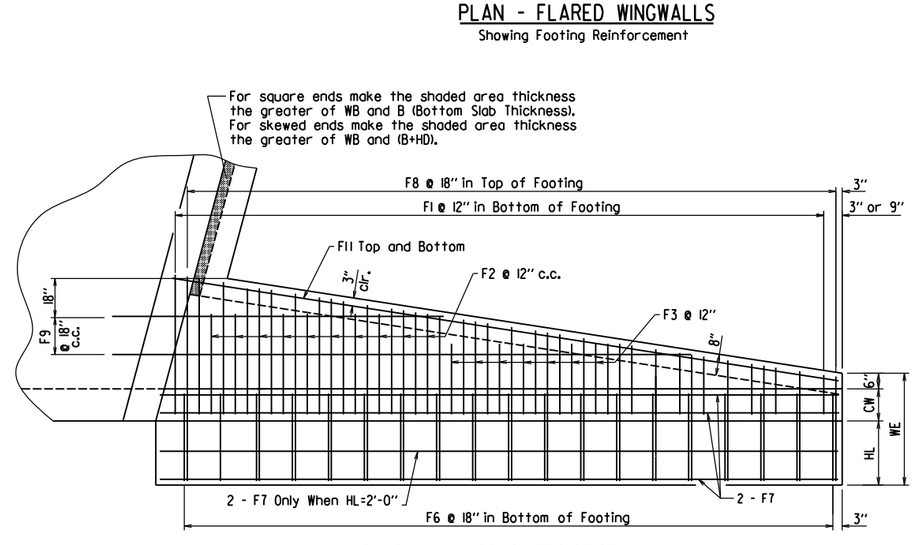

PART PLAN - PARALLEL WINGWALLS

PLAN - PARALLEL WINGWALLS

Showing Footing Reinforcement

SHEET 4 OF 4
GENERAL DETAILS OF R.C. BOX CULVERT
DETAILS OF WINGWALLS
SPECIAL DETAILS

V_LI17 FILENAME

STATE OF ARKANSAS
REGISTERED PROFESSIONAL ENGINEER
No. 8940
MARK ASHER

12/12/2023

DATE REVISED	DATE REVISED	FED.RD. DIST.NO.	STATE	JOB NO.	SHEET NO.	TOTAL SHEETS
		6	ARK.	040781	18	115
		TEMPORARY EROSION CONTROL DETAILS				

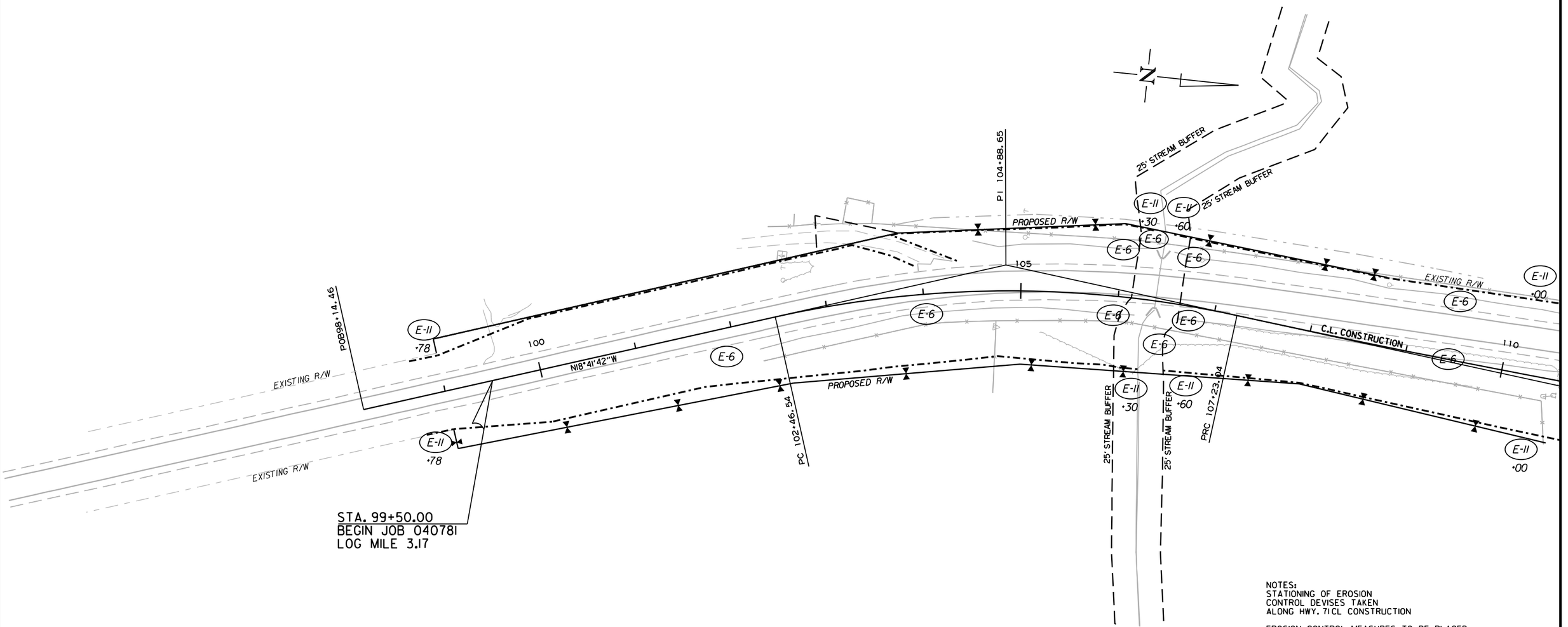

DATE	REVISION

LEGEND

E-6 = ROCK DITCH CHECK

E-11 = SILT FENCE

NOTES:
STATIONING OF EROSION
CONTROL DEVISES TAKEN
ALONG HWY. 71 CL CONSTRUCTION

EROSION CONTROL MEASURES TO BE PLACED DURING APPROPRIATE STAGES. THESE DEVICES SHALL BE LEFT IN PLACE AS LONG AS REQUIRED TO CONTROL EROSION.

THE QUANTITIES AND LOCATIONS OF THE TEMPORARY EROSION CONTROL DEVICES SHOWN IN THE PLANS ARE ESTIMATED AND MAY BE ALTERED IF AND WHERE DIRECTED BY THE ENGINEER TO MAXIMIZE THEIR EFFECTIVENESS. THE DEVICES ARE TO BE INSTALLED IN AN AREA ONLY WHEN THE SOIL DISTURBING ACTIVITY IN THAT AREA BEGINS.

STATE OF ARKANSAS
REGISTERED PROFESSIONAL ENGINEER
No. 8940
MARK ASHER

12/12/2023

TEMPORARY EROSION CONTROL DETAILS
CLEARING AND GRUBBING

T:\Job\040781\700 CADD Files\770 Roadway Files\Drawings\15-Erosion Control Details-Prior.dgn
12/12/2023 11:49:58 AM
...\15-Erosion Control Details-Prior.dgn

DATE REVISED	DATE REVISED	FED.RD. DIST.NO.	STATE	JOB NO.	SHEET NO.	TOTAL SHEETS
		6	ARK.	040781	19	115
		TEMPORARY EROSION CONTROL DETAILS				

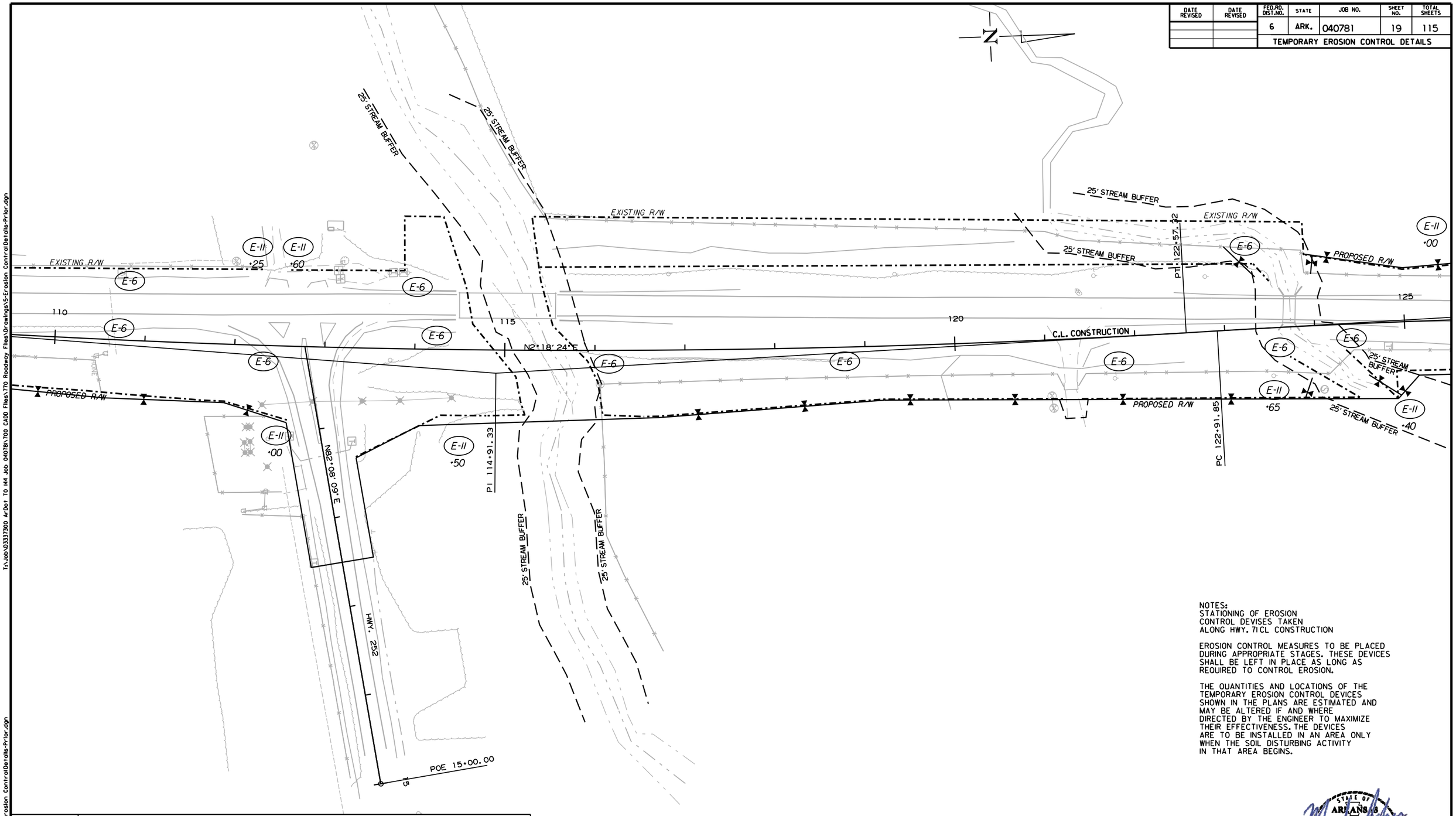

DATE	REVISION

LEGEND

(E-6) = ROCK DICH CHECK

(E-II) = SILT FENCE

NOTES:
STATIONING OF EROSION CONTROL DEVISES TAKEN ALONG HWY. 71CL CONSTRUCTION

EROSION CONTROL MEASURES TO BE PLACED DURING APPROPRIATE STAGES. THESE DEVICES SHALL BE LEFT IN PLACE AS LONG AS REQUIRED TO CONTROL EROSION.

THE QUANTITIES AND LOCATIONS OF THE TEMPORARY EROSION CONTROL DEVICES SHOWN IN THE PLANS ARE ESTIMATED AND MAY BE ALTERED IF AND WHERE DIRECTED BY THE ENGINEER TO MAXIMIZE THEIR EFFECTIVENESS. THE DEVICES ARE TO BE INSTALLED IN AN AREA ONLY WHEN THE SOIL DISTURBING ACTIVITY IN THAT AREA BEGINS.

STATE OF ARKANSAS
REGISTERED PROFESSIONAL ENGINEER
No. 8940
MARK ASHER

12/12/2023

TEMPORARY EROSION CONTROL DETAILS
CLEARING AND GRUBBING

T:\Job\03337300 ArDot TO 144 Job 040781\700 CADD Files\770 Roadway Files\Drawings\5-Erosion Control Details-Prior.dgn
...\5-Erosion Control Details-Prior.dgn
12/12/2023 11:20:00 AM

DATE REVISED	DATE REVISED	FED.RD. DIST.NO.	STATE	JOB NO.	SHEET NO.	TOTAL SHEETS
		6	ARK.	040781	20	115
		TEMPORARY EROSION CONTROL DETAILS				

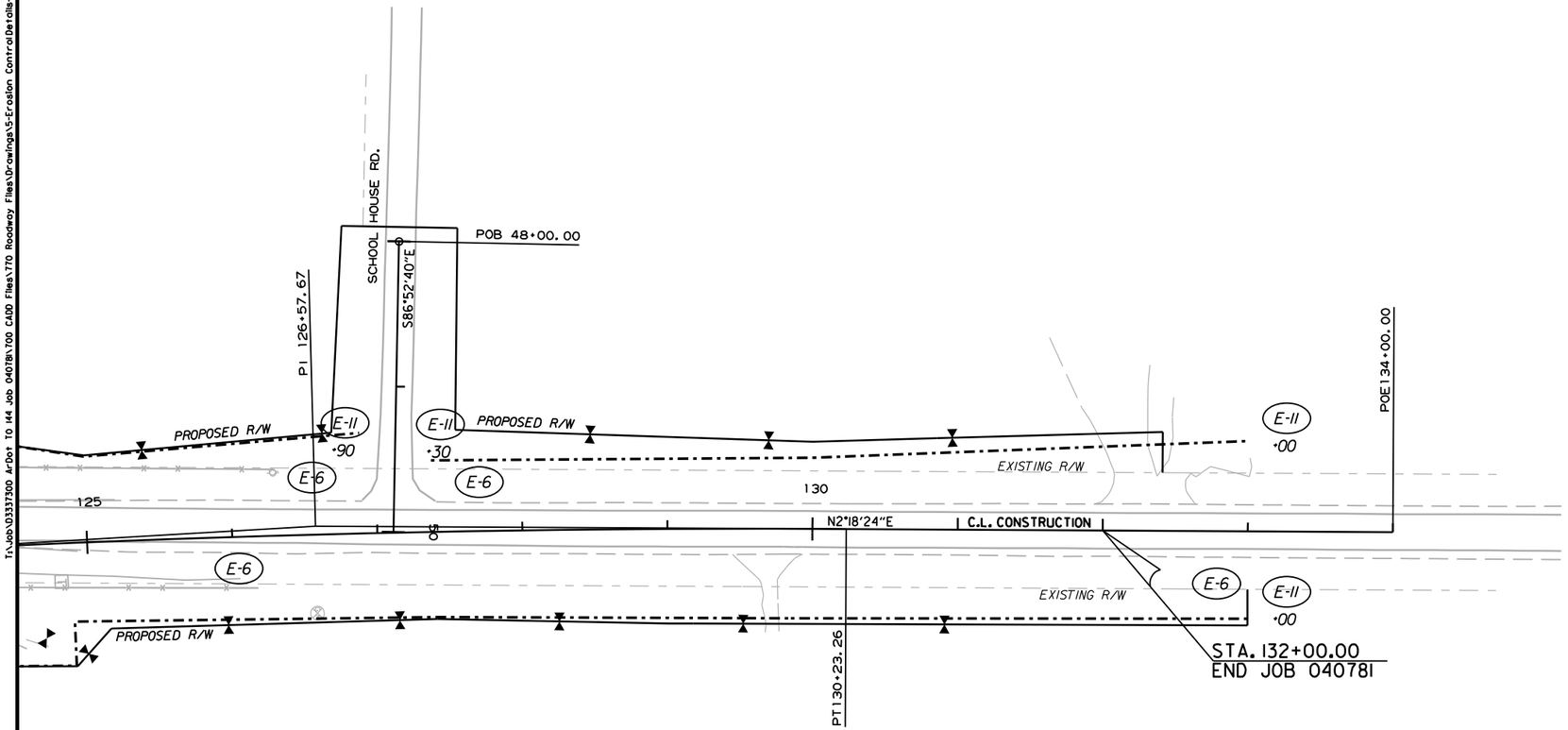

NOTES:
STATIONING OF EROSION CONTROL DEVISES TAKEN ALONG HWY. 71CL CONSTRUCTION

EROSION CONTROL MEASURES TO BE PLACED DURING APPROPRIATE STAGES. THESE DEVICES SHALL BE LEFT IN PLACE AS LONG AS REQUIRED TO CONTROL EROSION.

THE QUANTITIES AND LOCATIONS OF THE TEMPORARY EROSION CONTROL DEVICES SHOWN IN THE PLANS ARE ESTIMATED AND MAY BE ALTERED IF AND WHERE DIRECTED BY THE ENGINEER TO MAXIMIZE THEIR EFFECTIVENESS. THE DEVICES ARE TO BE INSTALLED IN AN AREA ONLY WHEN THE SOIL DISTURBING ACTIVITY IN THAT AREA BEGINS.

DATE	REVISION

LEGEND

E-6 = ROCK DITCH CHECK

E-11 = SILT FENCE

STATE OF ARKANSAS
REGISTERED PROFESSIONAL ENGINEER
No. 8940
MARK ASHER
12/12/2023

TEMPORARY EROSION CONTROL DETAILS
CLEARING AND GRUBBING

T:\Job\03337300 ArDot TO 144 Job 040781\700 CADD Files\770 Roadway Files\Drawings\5-Erosion Control Details-Prior.dgn
...\5-Erosion Control Details-Prior.dgn
12/12/2023 11:20:02 AM

DATE REVISED	DATE REVISED	FED.RD. DIST.NO.	STATE	JOB NO.	SHEET NO.	TOTAL SHEETS
		6	ARK.	040781	21	115

TEMPORARY EROSION CONTROL DETAILS

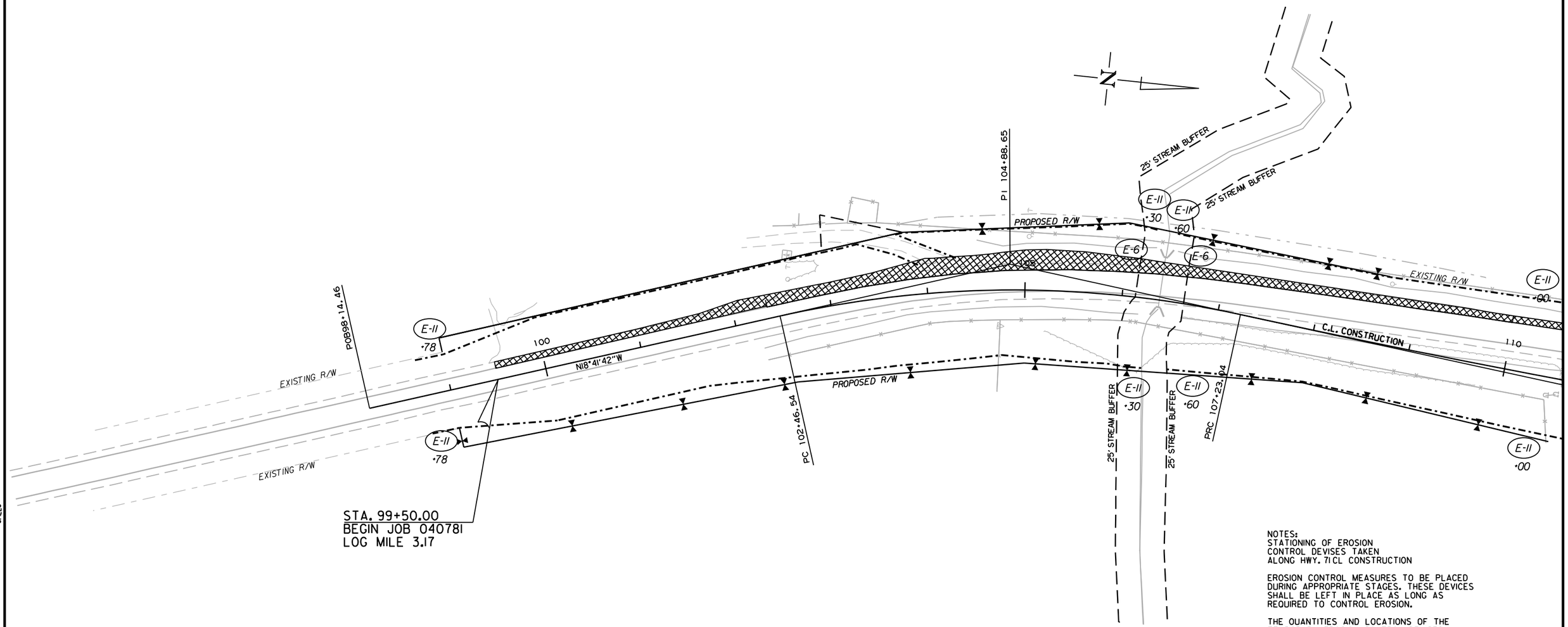

NOTES:
STATIONING OF EROSION
CONTROL DEVISES TAKEN
ALONG HWY. 71 CL CONSTRUCTION

EROSION CONTROL MEASURES TO BE PLACED DURING APPROPRIATE STAGES. THESE DEVICES SHALL BE LEFT IN PLACE AS LONG AS REQUIRED TO CONTROL EROSION.

THE QUANTITIES AND LOCATIONS OF THE TEMPORARY EROSION CONTROL DEVICES SHOWN IN THE PLANS ARE ESTIMATED AND MAY BE ALTERED IF AND WHERE DIRECTED BY THE ENGINEER TO MAXIMIZE THEIR EFFECTIVENESS. THE DEVICES ARE TO BE INSTALLED IN AN AREA ONLY WHEN THE SOIL DISTURBING ACTIVITY IN THAT AREA BEGINS.

DATE	REVISION

STAGE CONSTRUCTION

LEGEND

E-6 = ROCK DITCH CHECK

E-11 = SILT FENCE

STATE OF ARKANSAS
REGISTERED PROFESSIONAL ENGINEER
No. 8940
MARK ASHER

12/12/2023

TEMPORARY EROSION CONTROL DETAILS
STAGE I

$FILE$
...\5-Erosion Control Details-Prior.dgn
11:20:03 AM
$DATE$

DATE REVISED	DATE REVISED	FED.RD. DIST.NO.	STATE	JOB NO.	SHEET NO.	TOTAL SHEETS
		6	ARK.	040781	22	115

TEMPORARY EROSION CONTROL DETAILS

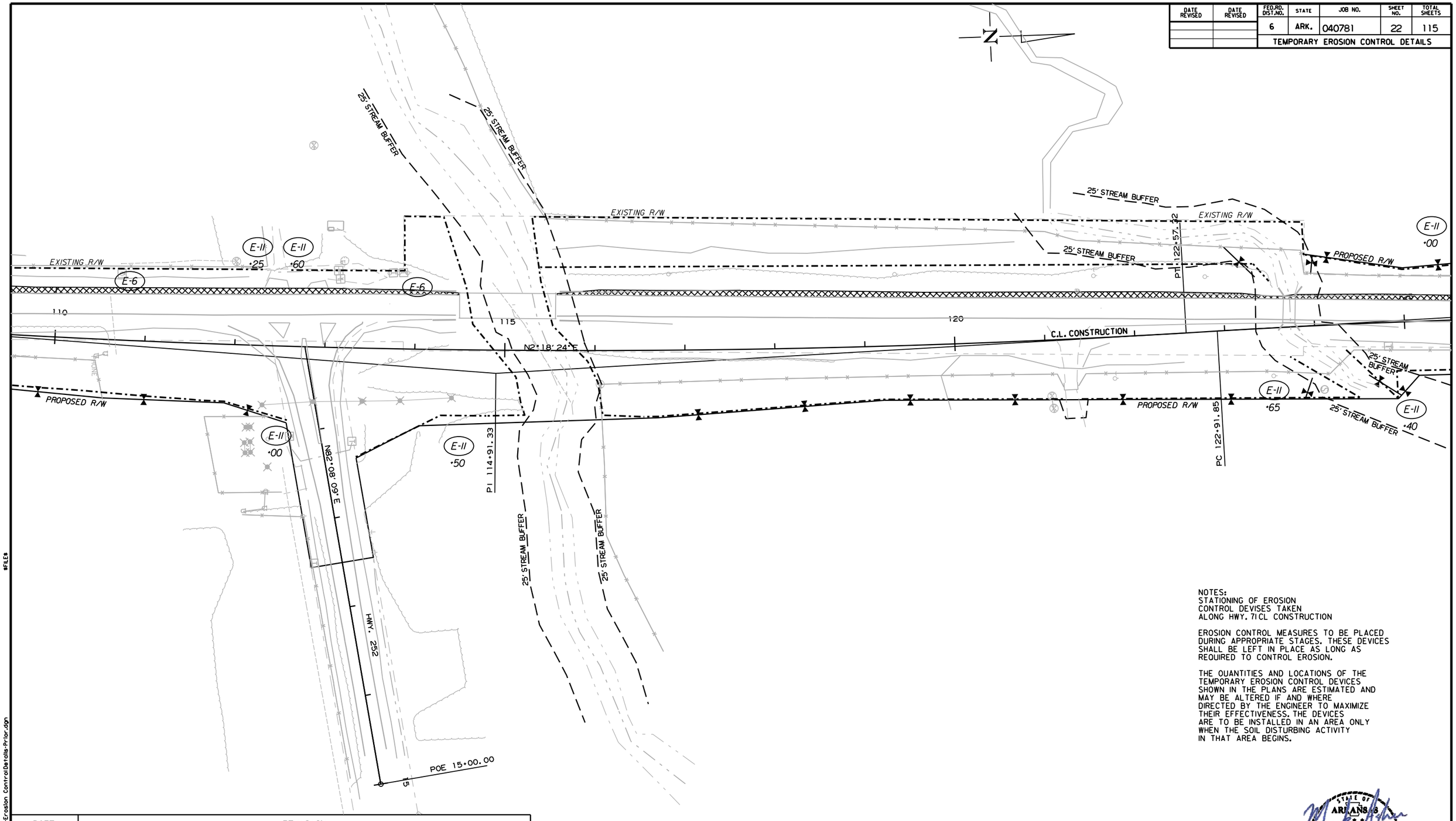

DATE	REVISION

LEGEND

(E-6) = ROCK DICH CHECK

(E-II) = SILT FENCE

STAGE CONSTRUCTION

NOTES:
STATIONING OF EROSION CONTROL DEVISES TAKEN ALONG HWY. 71CL CONSTRUCTION

EROSION CONTROL MEASURES TO BE PLACED DURING APPROPRIATE STAGES. THESE DEVICES SHALL BE LEFT IN PLACE AS LONG AS REQUIRED TO CONTROL EROSION.

THE QUANTITIES AND LOCATIONS OF THE TEMPORARY EROSION CONTROL DEVICES SHOWN IN THE PLANS ARE ESTIMATED AND MAY BE ALTERED IF AND WHERE DIRECTED BY THE ENGINEER TO MAXIMIZE THEIR EFFECTIVENESS. THE DEVICES ARE TO BE INSTALLED IN AN AREA ONLY WHEN THE SOIL DISTURBING ACTIVITY IN THAT AREA BEGINS.

STATE OF ARKANSAS
REGISTERED PROFESSIONAL ENGINEER
No. 8940
MARK ASHER

12/12/2023

TEMPORARY EROSION CONTROL DETAILS
STAGE I

#FILE# ...\5-Erosion Control\Details-Prior.dgn
#DATE# 11/20/04 AM

DATE REVISED	DATE REVISED	FED.RD. DIST.NO.	STATE	JOB NO.	SHEET NO.	TOTAL SHEETS
		6	ARK.	040781	23	115
		TEMPORARY EROSION CONTROL DETAILS				

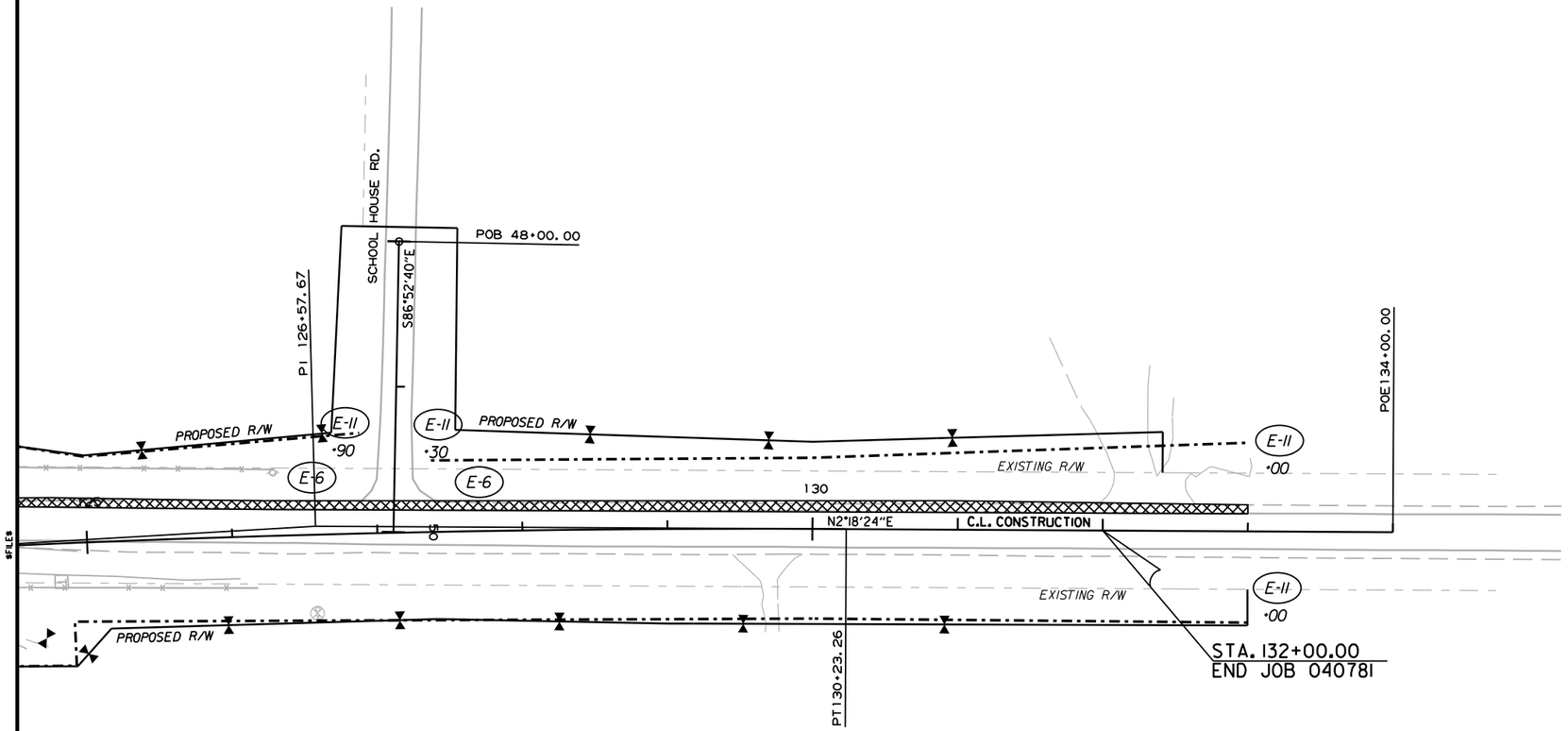

NOTES:
STATIONING OF EROSION CONTROL DEVISES TAKEN ALONG HWY. 71CL CONSTRUCTION

EROSION CONTROL MEASURES TO BE PLACED DURING APPROPRIATE STAGES. THESE DEVICES SHALL BE LEFT IN PLACE AS LONG AS REQUIRED TO CONTROL EROSION.

THE QUANTITIES AND LOCATIONS OF THE TEMPORARY EROSION CONTROL DEVICES SHOWN IN THE PLANS ARE ESTIMATED AND MAY BE ALTERED IF AND WHERE DIRECTED BY THE ENGINEER TO MAXIMIZE THEIR EFFECTIVENESS. THE DEVICES ARE TO BE INSTALLED IN AN AREA ONLY WHEN THE SOIL DISTURBING ACTIVITY IN THAT AREA BEGINS.

DATE	REVISION

LEGEND

(E-6) = ROCK DITCH CHECK

(E-11) = SILT FENCE

STAGE CONSTRUCTION

STATE OF ARKANSAS
REGISTERED PROFESSIONAL ENGINEER
No. 8940
MARK ASHER

12/12/2023

TEMPORARY EROSION CONTROL DETAILS
STAGE I

#FILE# ...\5-Erosion Control Details-Prior.dgn
#DATE# 11:20:06 AM

DATE REVISED	DATE REVISED	FED.RD. DIST.NO.	STATE	JOB NO.	SHEET NO.	TOTAL SHEETS
		6	ARK.	040781	24	115
		TEMPORARY EROSION CONTROL DETAILS				

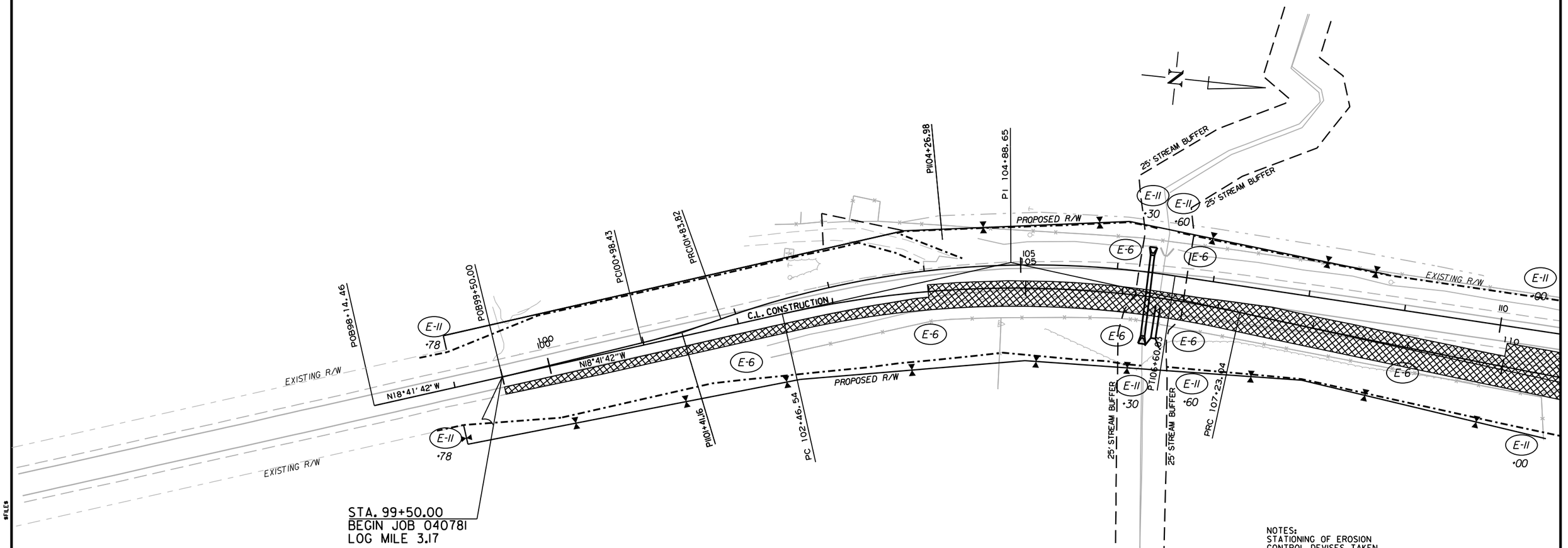

STA. 99+50.00
BEGIN JOB 040781
LOG MILE 3.17

NOTES:
STATIONING OF EROSION
CONTROL DEVISES TAKEN
ALONG HWY. 71 CL CONSTRUCTION

EROSION CONTROL MEASURES TO BE PLACED
DURING APPROPRIATE STAGES. THESE DEVICES
SHALL BE LEFT IN PLACE AS LONG AS
REQUIRED TO CONTROL EROSION.

THE QUANTITIES AND LOCATIONS OF THE
TEMPORARY EROSION CONTROL DEVICES
SHOWN IN THE PLANS ARE ESTIMATED AND
MAY BE ALTERED IF AND WHERE
DIRECTED BY THE ENGINEER TO MAXIMIZE
THEIR EFFECTIVENESS. THE DEVICES
ARE TO BE INSTALLED IN AN AREA ONLY
WHEN THE SOIL DISTURBING ACTIVITY
IN THAT AREA BEGINS.

DATE	REVISION

LEGEND

E-6	= ROCK DITCH CHECK
E-11	= SILT FENCE

STAGE CONSTRUCTION

STATE OF ARKANSAS
REGISTERED PROFESSIONAL ENGINEER
No. 8940
MARK ASHER

12/12/2023

TEMPORARY EROSION CONTROL DETAILS
STAGE 2

$FILE$
...\5-Erosion ControlDetails-Prior.dgn
11:20:07 AM
$DATE$

DATE REVISED	DATE REVISED	FED.RD. DIST.NO.	STATE	JOB NO.	SHEET NO.	TOTAL SHEETS
		6	ARK.	040781	25	115

TEMPORARY EROSION CONTROL DETAILS

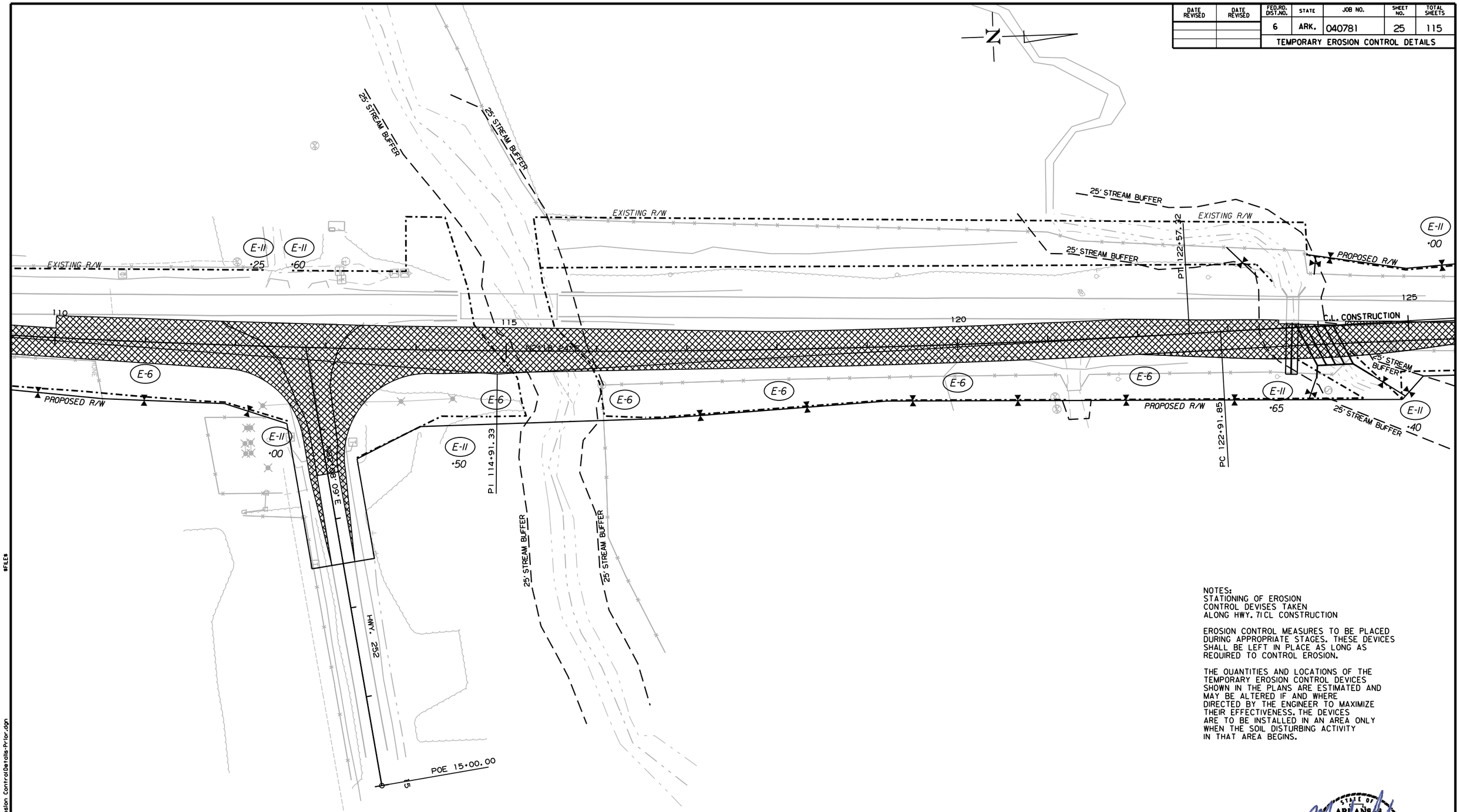

NOTES:
STATIONING OF EROSION CONTROL DEVISES TAKEN ALONG HWY. 71CL CONSTRUCTION

EROSION CONTROL MEASURES TO BE PLACED DURING APPROPRIATE STAGES. THESE DEVICES SHALL BE LEFT IN PLACE AS LONG AS REQUIRED TO CONTROL EROSION.

THE QUANTITIES AND LOCATIONS OF THE TEMPORARY EROSION CONTROL DEVICES SHOWN IN THE PLANS ARE ESTIMATED AND MAY BE ALTERED IF AND WHERE DIRECTED BY THE ENGINEER TO MAXIMIZE THEIR EFFECTIVENESS. THE DEVICES ARE TO BE INSTALLED IN AN AREA ONLY WHEN THE SOIL DISTURBING ACTIVITY IN THAT AREA BEGINS.

STAGE CONSTRUCTION

DATE	REVISION

LEGEND

(E-6) = ROCK DICH CHECK
(E-II) = SILT FENCE

STATE OF ARKANSAS
REGISTERED PROFESSIONAL ENGINEER
No. 8940
MARK ASHER
12/12/2023

TEMPORARY EROSION CONTROL DETAILS
STAGE 2

#FILE$
...\5-Erosion ControlDetails-Prior.dgn
#DATE$ 11:20:09 AM

DATE REVISED	DATE REVISED	FED.RD. DIST.NO.	STATE	JOB NO.	SHEET NO.	TOTAL SHEETS
		6	ARK.	040781	26	115
		TEMPORARY EROSION CONTROL DETAILS				

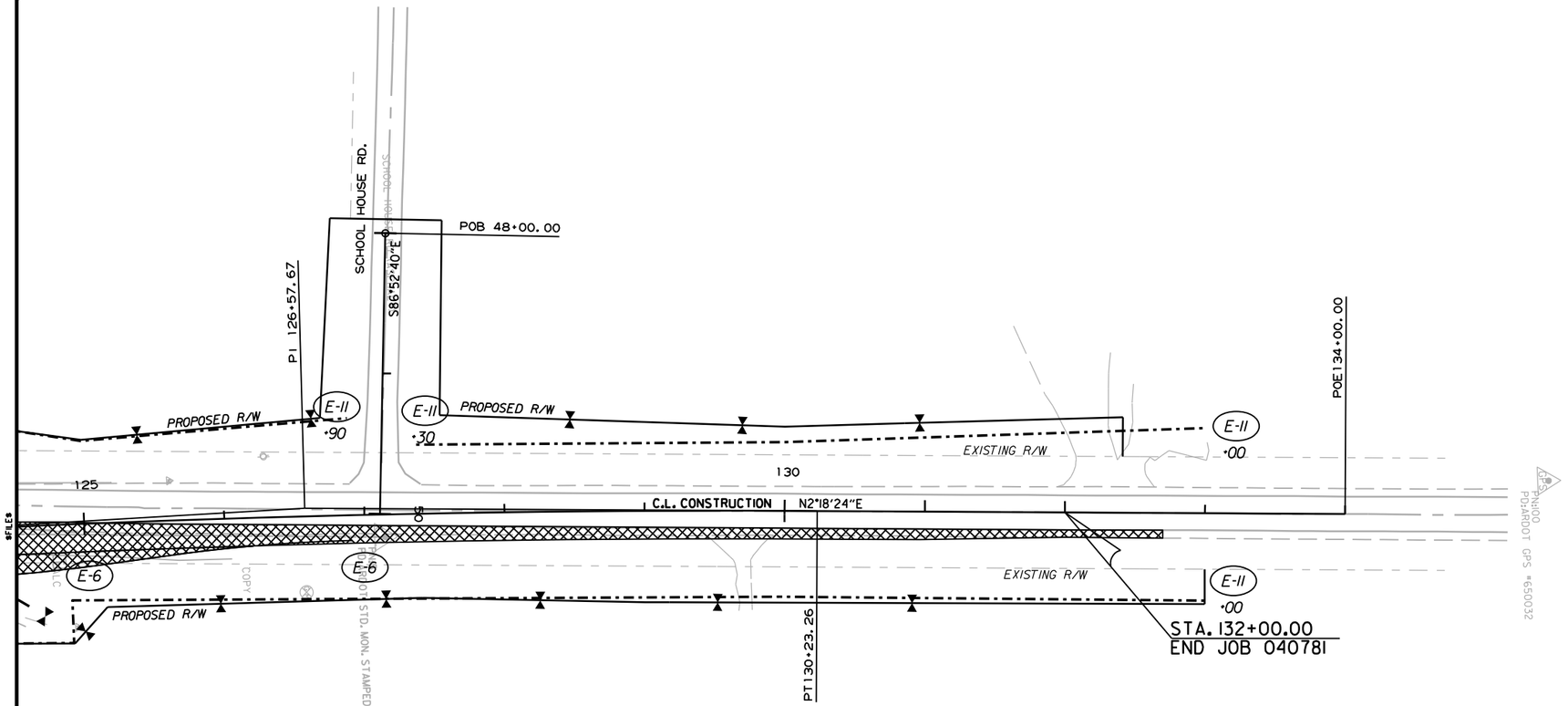

NOTES:
STATIONING OF EROSION CONTROL DEVISES TAKEN ALONG HWY. 71CL CONSTRUCTION

EROSION CONTROL MEASURES TO BE PLACED DURING APPROPRIATE STAGES. THESE DEVICES SHALL BE LEFT IN PLACE AS LONG AS REQUIRED TO CONTROL EROSION.

THE QUANTITIES AND LOCATIONS OF THE TEMPORARY EROSION CONTROL DEVICES SHOWN IN THE PLANS ARE ESTIMATED AND MAY BE ALTERED IF AND WHERE DIRECTED BY THE ENGINEER TO MAXIMIZE THEIR EFFECTIVENESS. THE DEVICES ARE TO BE INSTALLED IN AN AREA ONLY WHEN THE SOIL DISTURBING ACTIVITY IN THAT AREA BEGINS.

DATE	REVISION

STAGE CONSTRUCTION

LEGEND

E-6 = ROCK DITCH CHECK

E-11 = SILT FENCE

STATE OF ARKANSAS
REGISTERED PROFESSIONAL ENGINEER
No. 8940
MARK ASHER

12/12/2023

TEMPORARY EROSION CONTROL DETAILS
STAGE 2

#FILE# ...\5-Erosion Control Details-Prior.dgn
#DATE# 1/20/10 AM

DATE REVISED	DATE REVISED	FED.RD. DIST.NO.	STATE	JOB NO.	SHEET NO.	TOTAL SHEETS
		6	ARK.	040781	27	115
		TEMPORARY EROSION CONTROL DETAILS				

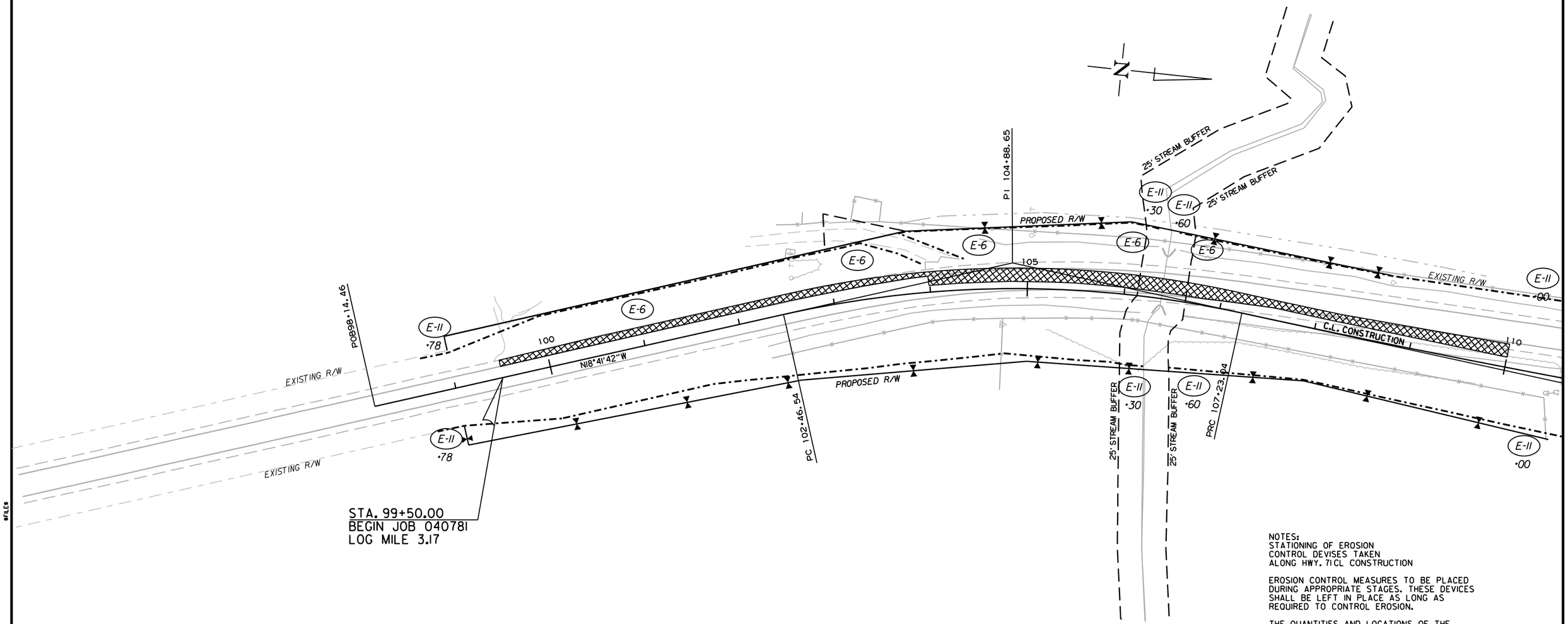

NOTES:
STATIONING OF EROSION CONTROL DEVISES TAKEN ALONG HWY. 71 CL CONSTRUCTION

EROSION CONTROL MEASURES TO BE PLACED DURING APPROPRIATE STAGES. THESE DEVICES SHALL BE LEFT IN PLACE AS LONG AS REQUIRED TO CONTROL EROSION.

THE QUANTITIES AND LOCATIONS OF THE TEMPORARY EROSION CONTROL DEVICES SHOWN IN THE PLANS ARE ESTIMATED AND MAY BE ALTERED IF AND WHERE DIRECTED BY THE ENGINEER TO MAXIMIZE THEIR EFFECTIVENESS. THE DEVICES ARE TO BE INSTALLED IN AN AREA ONLY WHEN THE SOIL DISTURBING ACTIVITY IN THAT AREA BEGINS.

DATE	REVISION

LEGEND

E-6 = ROCK DITCH CHECK

E-11 = SILT FENCE

STAGE CONSTRUCTION

STATE OF ARKANSAS
REGISTERED PROFESSIONAL ENGINEER
No. 8940
MARK ASHER

12/12/2023

TEMPORARY EROSION CONTROL DETAILS
STAGE 3

$FILE$
...\5-Erosion Control Details-Prior.dgn
11:20:11 AM
$DATE$

DATE REVISED	DATE REVISED	FED.RD. DIST.NO.	STATE	JOB NO.	SHEET NO.	TOTAL SHEETS
		6	ARK.	040781	28	115

TEMPORARY EROSION CONTROL DETAILS

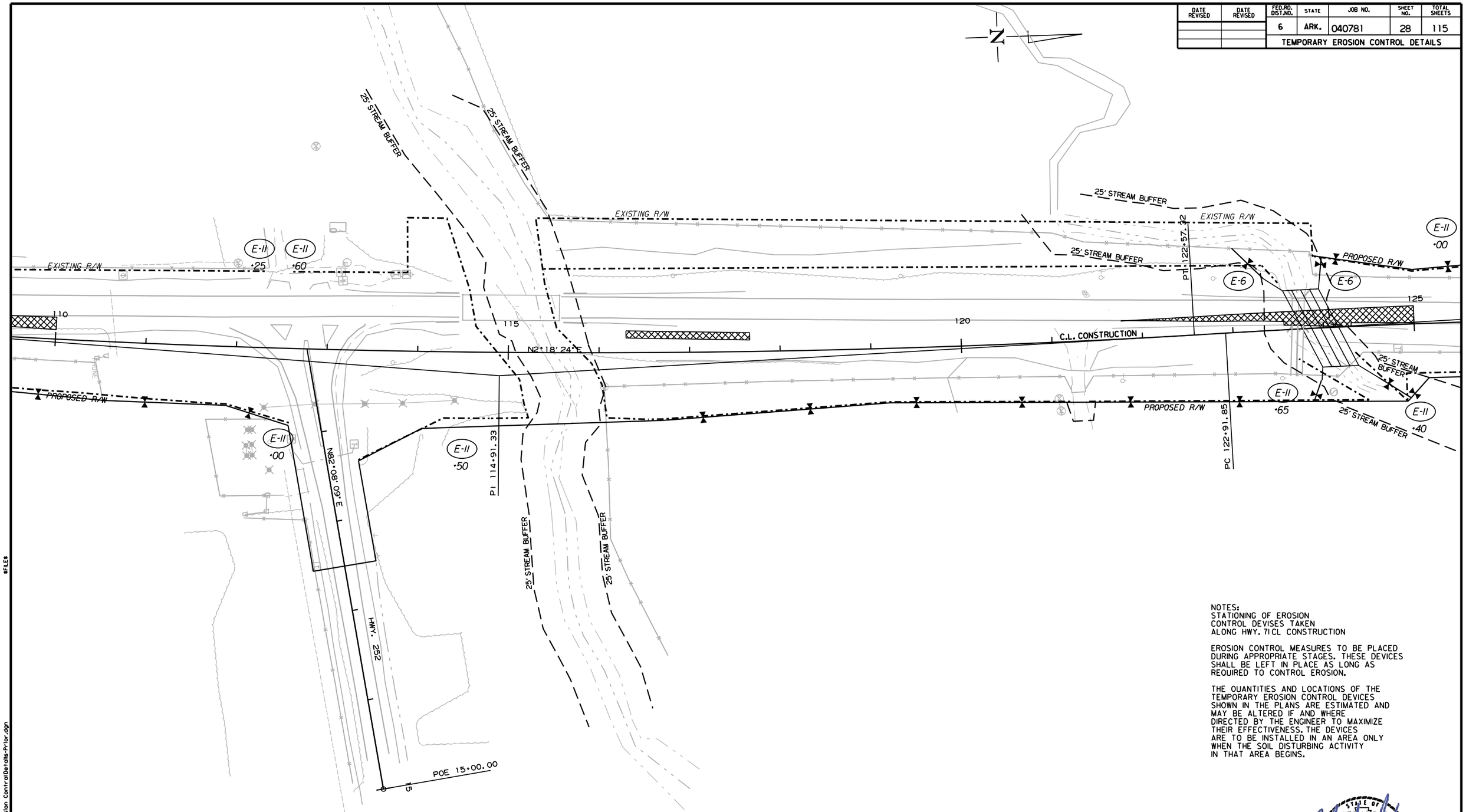

DATE	REVISION

LEGEND

E-6 = ROCK DICH CHECK

E-II = SILT FENCE

STAGE CONSTRUCTION

NOTES:
STATIONING OF EROSION CONTROL DEVISES TAKEN ALONG HWY. 71CL CONSTRUCTION

EROSION CONTROL MEASURES TO BE PLACED DURING APPROPRIATE STAGES. THESE DEVICES SHALL BE LEFT IN PLACE AS LONG AS REQUIRED TO CONTROL EROSION.

THE QUANTITIES AND LOCATIONS OF THE TEMPORARY EROSION CONTROL DEVICES SHOWN IN THE PLANS ARE ESTIMATED AND MAY BE ALTERED IF AND WHERE DIRECTED BY THE ENGINEER TO MAXIMIZE THEIR EFFECTIVENESS. THE DEVICES ARE TO BE INSTALLED IN AN AREA ONLY WHEN THE SOIL DISTURBING ACTIVITY IN THAT AREA BEGINS.

STATE OF ARKANSAS
REGISTERED PROFESSIONAL ENGINEER
No. 8940
MARK ASHER
12/12/2023

TEMPORARY EROSION CONTROL DETAILS
STAGE 3

#FILE# ...\5-Erosion Control Details-Prior.dgn #DATE# 11:20:53 AM

DATE REVISED	DATE REVISED	FED.RD. DIST.NO.	STATE	JOB NO.	SHEET NO.	TOTAL SHEETS
		6	ARK.	040781	29	115
		TEMPORARY EROSION CONTROL DETAILS				

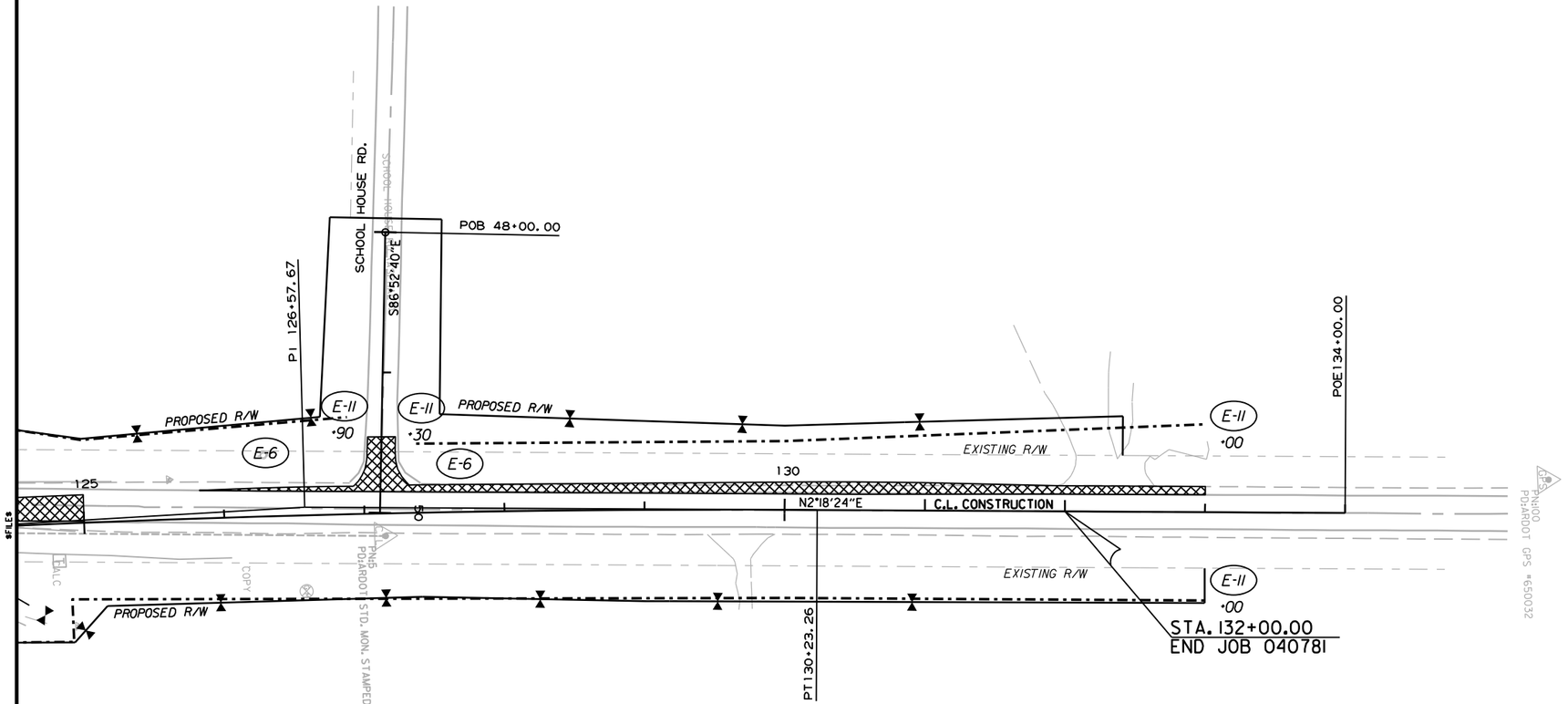

NOTES:
STATIONING OF EROSION CONTROL DEVISES TAKEN ALONG HWY. 71CL CONSTRUCTION

EROSION CONTROL MEASURES TO BE PLACED DURING APPROPRIATE STAGES. THESE DEVICES SHALL BE LEFT IN PLACE AS LONG AS REQUIRED TO CONTROL EROSION.

THE QUANTITIES AND LOCATIONS OF THE TEMPORARY EROSION CONTROL DEVICES SHOWN IN THE PLANS ARE ESTIMATED AND MAY BE ALTERED IF AND WHERE DIRECTED BY THE ENGINEER TO MAXIMIZE THEIR EFFECTIVENESS. THE DEVICES ARE TO BE INSTALLED IN AN AREA ONLY WHEN THE SOIL DISTURBING ACTIVITY IN THAT AREA BEGINS.

DATE	REVISION

LEGEND

E-6 = ROCK DITCH CHECK

E-11 = SILT FENCE

STAGE CONSTRUCTION

STATE OF ARKANSAS
REGISTERED PROFESSIONAL ENGINEER
No. 8940
MARK ASHER
12/12/2023

TEMPORARY EROSION CONTROL DETAILS
STAGE 3

#FILE# ...\5-Erosion Control Details-Prior.dgn
#DATE# 11:20:13 AM

DATE REVISED	DATE REVISED	FED.RD. DIST.NO.	STATE	JOB NO.	SHEET NO.	TOTAL SHEETS
		6	ARK.	040781	30	115
		MAINTENANCE OF TRAFFIC DETAILS				

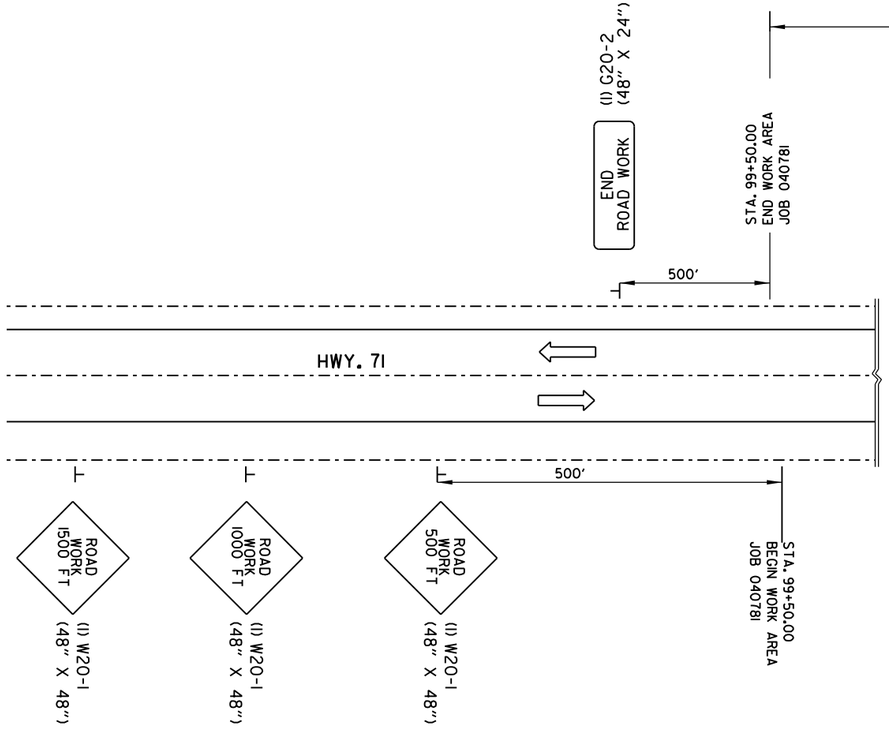

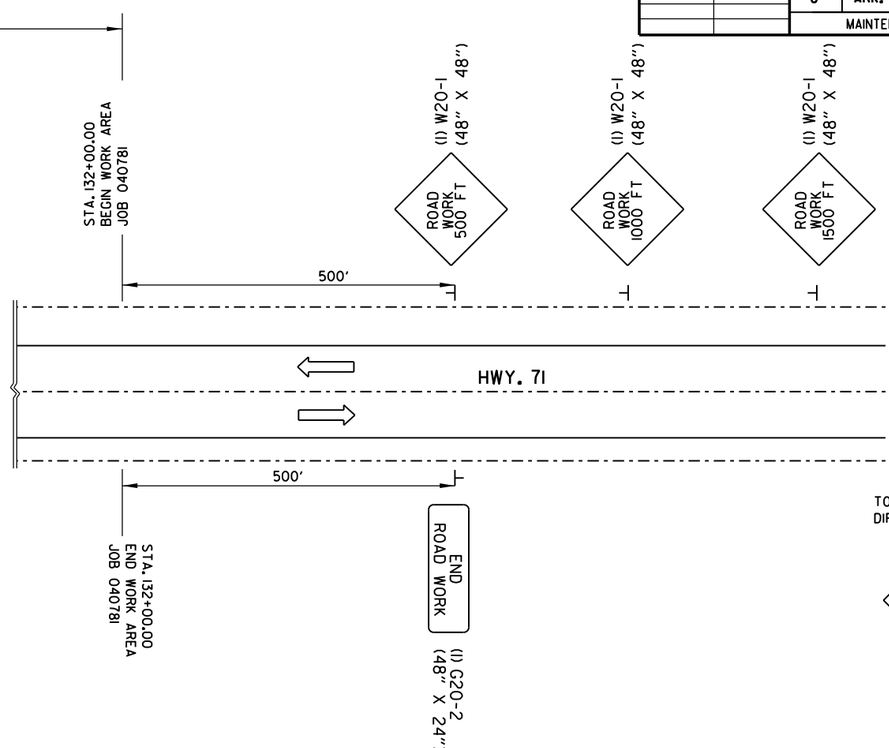

TO BE USED IF AND WHERE DIRECTED BY THE ENGINEER.

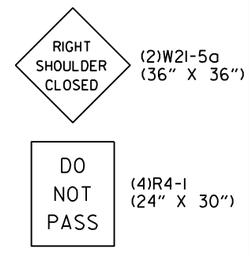

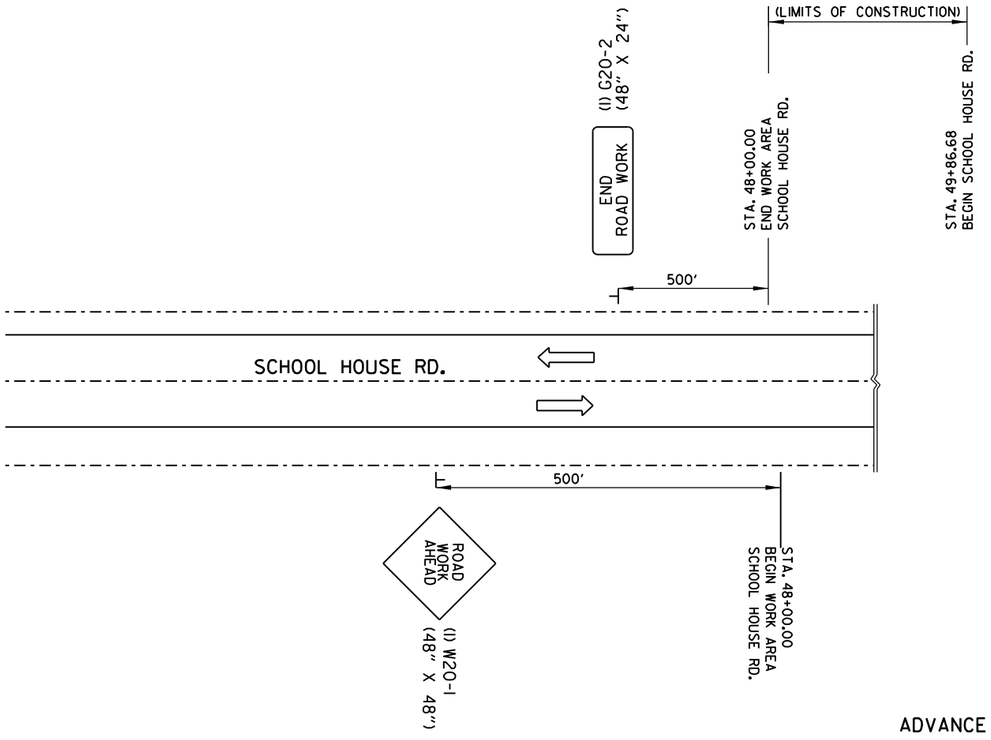

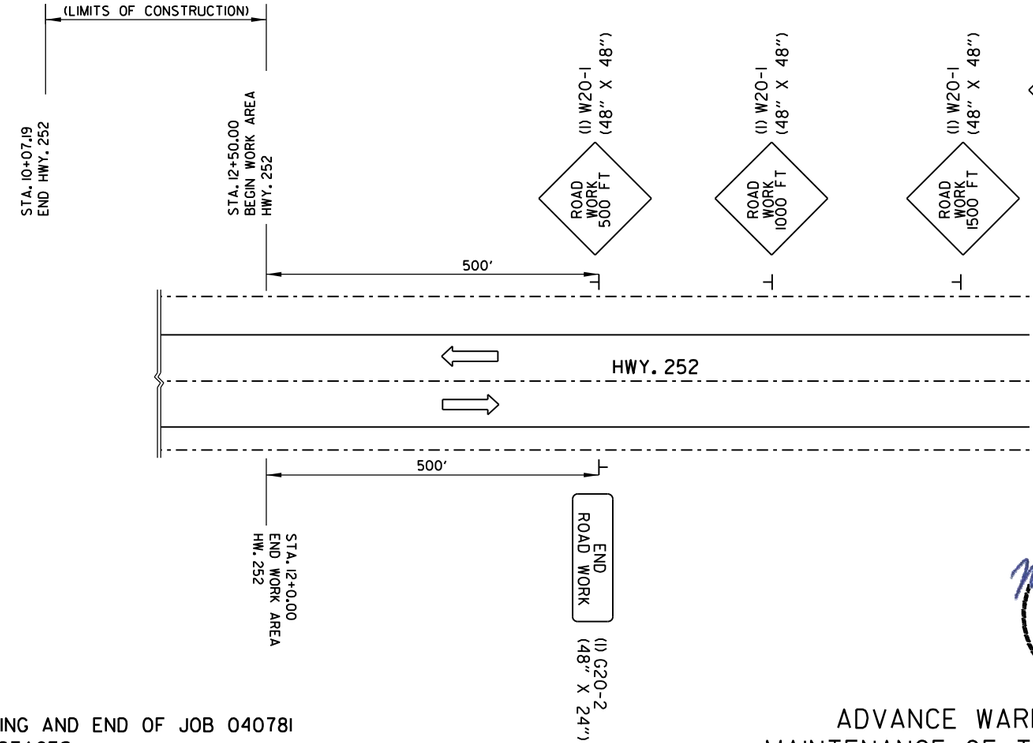

STATE OF ARKANSAS
REGISTERED PROFESSIONAL ENGINEER
No. 8940
MARK ASHER
12/12/2023

ADVANCE SIGNS AT BEGINNING AND END OF JOB 040781
ALL STAGES

ADVANCE WARNING SIGNS
MAINTENANCE OF TRAFFIC DETAILS

$DATE$ N:20:35 AM ...\6-Maintenance of Traffic-Advance Warning Signs.dgn $FILE$

DATE REVISED	DATE REVISED	FED.RD. DIST.NO.	STATE	JOB NO.	SHEET NO.	TOTAL SHEETS
		6	ARK.	040781	31	115
		MAINTENANCE OF TRAFFIC DETAILS				

SEQUENCE OF CONSTRUCTION

STAGE 1
PLACE LEVELING WHERE INDICATED ON THE PLANS
RECONSTRUCT SHOULDER FOR M.O.T. ALONG HWY. 71
REMOVE PERMANENT PAVEMENT MARKINGS
PLACE CONSTRUCTION PAVEMENT MARKINGS
PLACE TEMP. BARRIER WALL/TRAFFIC DRUMS
ROUTE HWY. 71 TRAFFIC ONTO THE REBUILT SHOULDER AND LANES

STAGE 2
CONSTRUCT NEW PAVEMENT AS INDICATED ON THE PLANS
CONSTRUCT NEW BRIDGE
CONSTRUCT HWY. 252 TIE-IN
PLACE CONSTRUCTION PAVEMENT MARKINGS ON NEWLY CONSTRUCTED PAVEMENT
RELOCATE TEMP. BARRIER WALL/TRAFFIC DRUMS
ROUTE HWY. 71 TRAFFIC ON NEWLY CONSTRUCTED PAVEMENT

STAGE 3
CONSTRUCT REMAINING PORTIONS OF HWY. 71
REMOVE TEMP. BARRIER WALL
PLACE FINAL LAYER OF SURFACE COURSE
PLACE PERMANENT PAVEMENT MARKINGS
ROUTE HWY. 71 TRAFFIC ON NEWLY CONSTRUCTED LANES

NOTE: THE QUANTITY OF VERTICAL PANELS PROVIDED IN THE CONTRACT IS FOR ONE SIDE OF THE ROADWAY FOR THE FULL LENGTH OF JOB. THIS IS THE MAXIMUM QUANTITY REQUIRED TO ALLOW THE CONTRACTOR TO NOTCH ONE MILE, BACKFILL TO A POINT WHERE THE VERTICAL DIFFERENTIAL IS 4' OR LESS, AND THEN NOTCH ANOTHER ONE-MILE SECTION. THIS IS THE MAXIMUM NUMBER OF VERTICAL PANELS THAT WILL BE PAID FOR. REFER TO SECTION 603.02 OF THE STANDARD SPECIFICATIONS FOR CONSTRUCTION REQUIREMENTS.

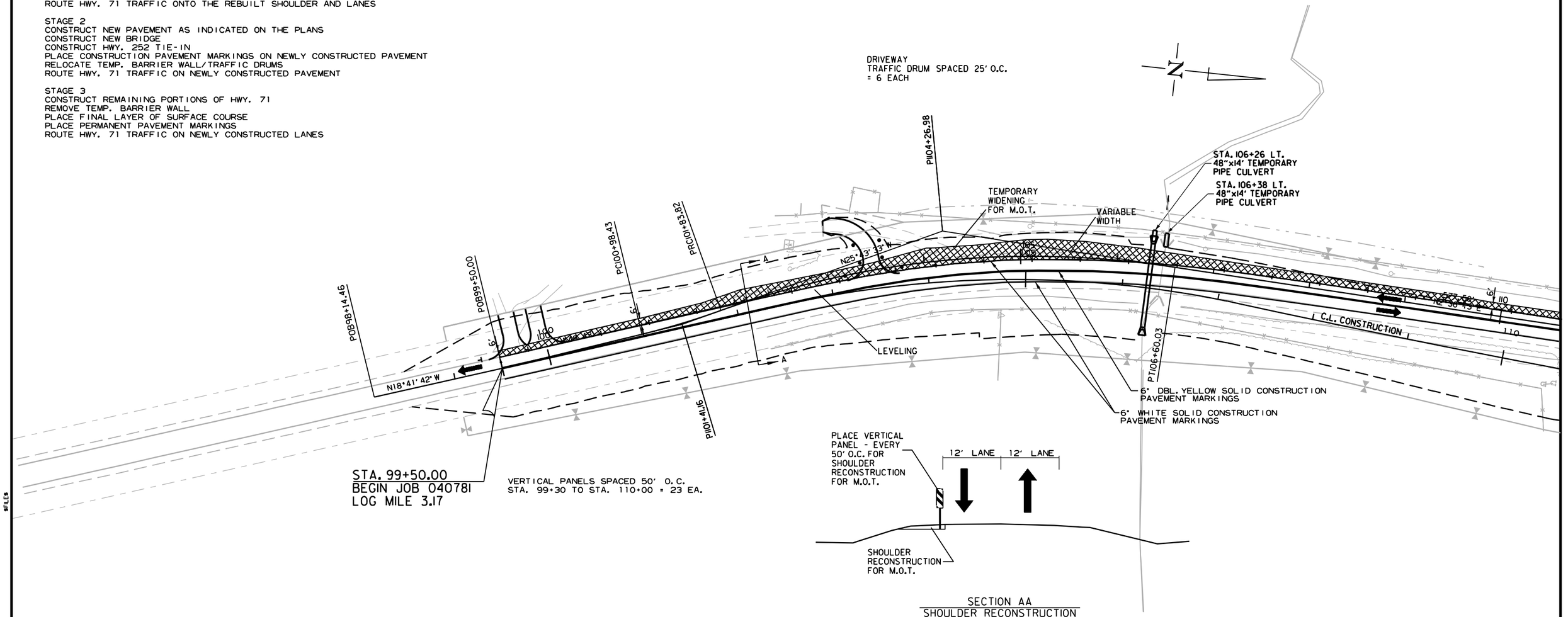

STA. 99+50.00
BEGIN JOB 040781
LOG MILE 3.17

VERTICAL PANELS SPACED 50' O.C.
STA. 99+30 TO STA. 110+00 = 23 EA.

SECTION AA
SHOULDER RECONSTRUCTION
FOR M.O.T.

CONSTRUCTION PAVEMENT MARKINGS
STA. 99+50.00 TO STA. 110+00.00

6" YELLOW CONTINUOUS	2100 L.F.
6" WHITE CONTINUOUS	2100 L.F.
RAISED PAVEMENT MARKINGS 80' ON CENTER	26 EA.

PAVEMENT MARKING REMOVAL
STA. 99+50.00 TO STA. 110+00.00

6" YELLOW CONTINUOUS	2100 L.F.
6" WHITE CONTINUOUS	2100 L.F.

STATE OF ARKANSAS
REGISTERED PROFESSIONAL ENGINEER
No. 8940
MARK ASHER
12/12/2023

MAINTENANCE OF TRAFFIC DETAILS
STAGE 1

$FILE$
...\7-Maintenance of Traffic.dgn
$DATE$ 12/1/08 AM

DATE REVISED	DATE REVISED	FED.RD. DIST.NO.	STATE	JOB NO.	SHEET NO.	TOTAL SHEETS
		6	ARK.	040781	32	115
		MAINTENANCE OF TRAFFIC DETAILS				

SEQUENCE OF CONSTRUCTION

STAGE 1
PLACE LEVELING WHERE INDICATED ON THE PLANS
RECONSTRUCT SHOULDER FOR M.O.T. ALONG HWY. 71
REMOVE PERMANENT PAVEMENT MARKINGS
PLACE CONSTRUCTION PAVEMENT MARKINGS
PLACE TEMP. BARRIER WALL/TRAFFIC DRUMS
ROUTE HWY. 71 TRAFFIC ONTO THE REBUILT SHOULDER AND LANES

STAGE 2
CONSTRUCT NEW PAVEMENT AS INDICATED ON THE PLANS
CONSTRUCT NEW BRIDGE
CONSTRUCT HWY. 252 TIE-IN
PLACE CONSTRUCTION PAVEMENT MARKINGS ON NEWLY CONSTRUCTED PAVEMENT
RELOCATE TEMP. BARRIER WALL/TRAFFIC DRUMS
ROUTE HWY. 71 TRAFFIC ON NEWLY CONSTRUCTED PAVEMENT ⊗

STAGE 3
CONSTRUCT REMAINING PORTIONS OF HWY. 71
REMOVE TEMP. BARRIER WALL
PLACE FINAL LAYER OF SURFACE COURSE
PLACE PERMANENT PAVEMENT MARKINGS
ROUTE HWY. 71 TRAFFIC ON NEWLY CONSTRUCTED LANES

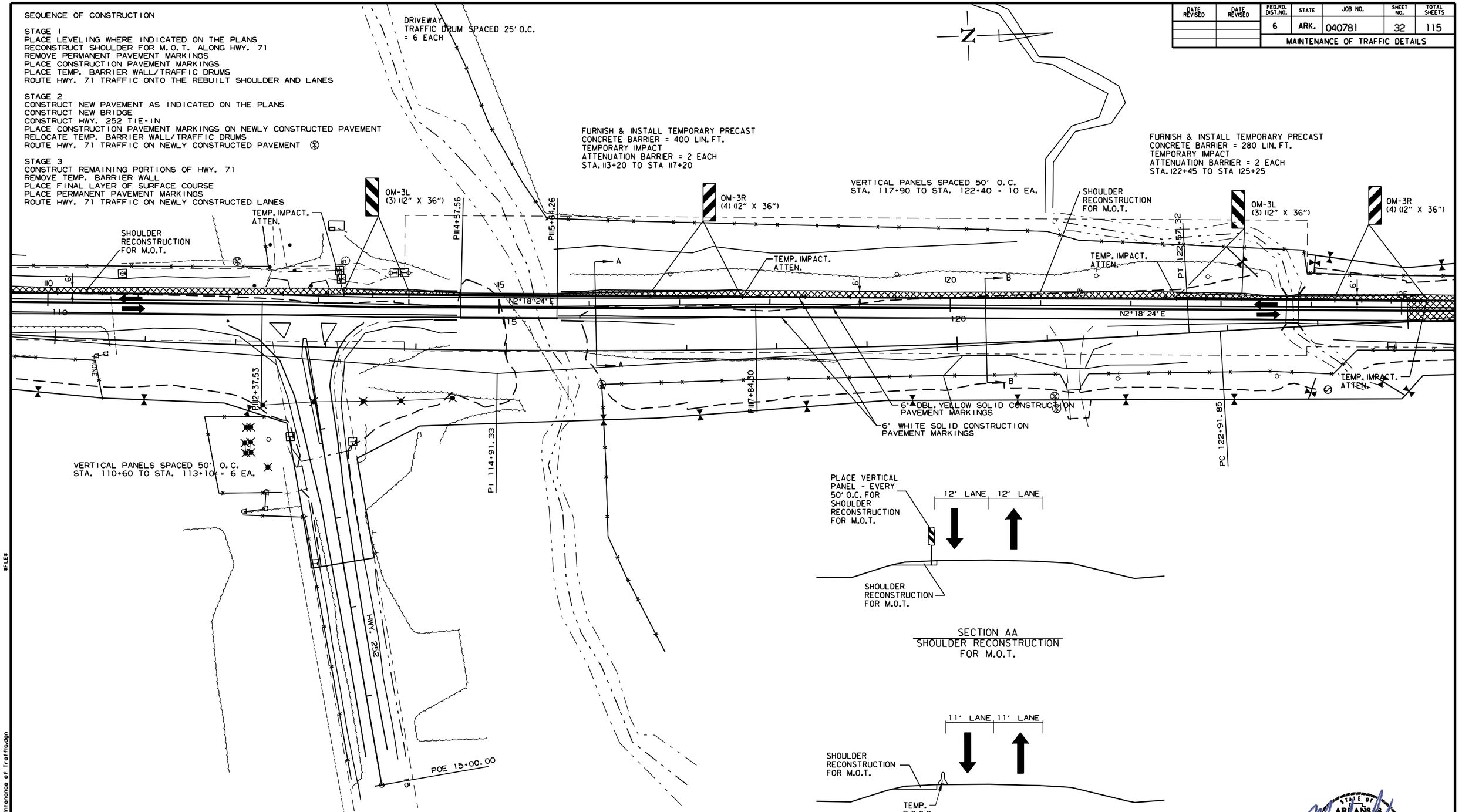

SECTION AA
SHOULDER RECONSTRUCTION FOR M.O.T.

SECTION BB
SHOULDER RECONSTRUCTION FOR M.O.T.

CONSTRUCTION PAVEMENT MARKINGS
STA. 110+00.00 TO STA. 125+00.00

6" YELLOW CONTINUOUS	3000 L.F.
6" WHITE CONTINUOUS	3000 L.F.
RAISED PAVEMENT MARKINGS 80' ON CENTER	38 EA.

PAVEMENT MARKING REMOVAL
STA. 110+00.00 TO STA. 125+00.00

6" YELLOW CONTINUOUS	3000 L.F.
6" WHITE CONTINUOUS	3000 L.F.

STATE OF ARKANSAS
REGISTERED PROFESSIONAL ENGINEER
No. 8940
MARK ASHER
12/12/2023

MAINTENANCE OF TRAFFIC DETAILS
STAGE 1

$FILE$
...\7-Maintenance of Traffic.dgn
$DATE$ 11:29:17 AM

DATE REVISED	DATE REVISED	FED.RD. DIST.NO.	STATE	JOB NO.	SHEET NO.	TOTAL SHEETS
		6	ARK.	040781	33	115
		MAINTENANCE OF TRAFFIC DETAILS				

SEQUENCE OF CONSTRUCTION

STAGE 1
PLACE LEVELING WHERE INDICATED ON THE PLANS
RECONSTRUCT SHOULDER FOR M.O.T. ALONG HWY. 71
REMOVE PERMANENT PAVEMENT MARKINGS
PLACE CONSTRUCTION PAVEMENT MARKINGS
PLACE TEMP. BARRIER WALL/TRAFFIC DRUMS
ROUTE HWY. 71 TRAFFIC ONTO THE REBUILT SHOULDER AND LANES

STAGE 2
CONSTRUCT NEW PAVEMENT AS INDICATED ON THE PLANS
CONSTRUCT NEW BRIDGE
CONSTRUCT HWY. 252 TIE-IN
PLACE CONSTRUCTION PAVEMENT MARKINGS ON NEWLY CONSTRUCTED PAVEMENT
RELOCATE TEMP. BARRIER WALL/TRAFFIC DRUMS
ROUTE HWY. 71 TRAFFIC ON NEWLY CONSTRUCTED PAVEMENT

STAGE 3
CONSTRUCT REMAINING PORTIONS OF HWY. 71
REMOVE TEMP. BARRIER WALL
PLACE FINAL LAYER OF SURFACE COURSE
PLACE PERMANENT PAVEMENT MARKINGS
ROUTE HWY. 71 TRAFFIC ON NEWLY CONSTRUCTED LANES

CONSTRUCTION PAVEMENT MARKINGS
STA. 125+00.00 TO STA. 132+00.00

6" YELLOW CONTINUOUS	1400 L.F.
6" WHITE CONTINUOUS	1400 L.F.
RAISED PAVEMENT MARKINGS 80' ON CENTER	18 EA.

PAVEMENT MARKING REMOVAL
STA. 125+00.00 TO STA. 132+00.00

6" YELLOW CONTINUOUS	1400 L.F.
6" WHITE CONTINUOUS	1400 L.F.

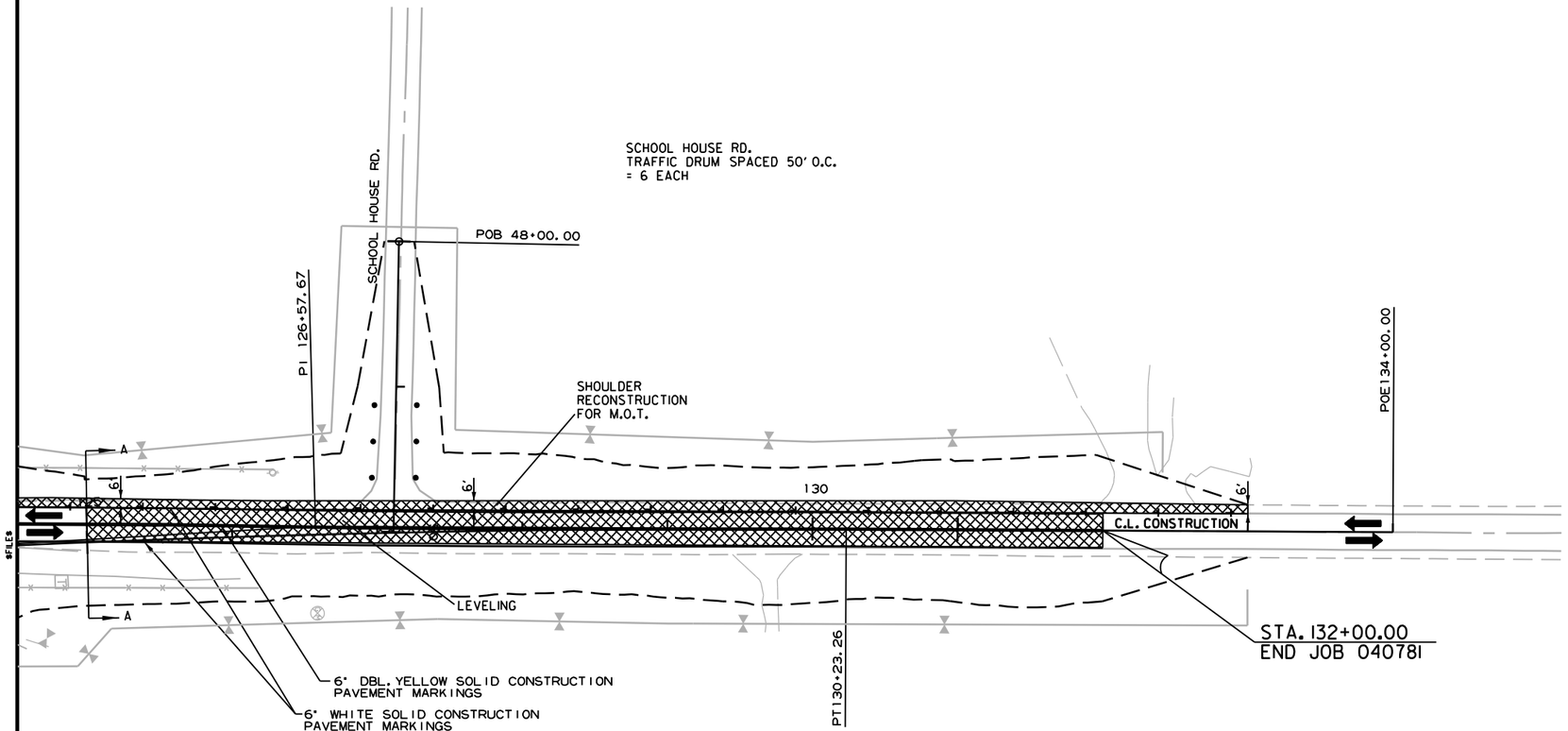

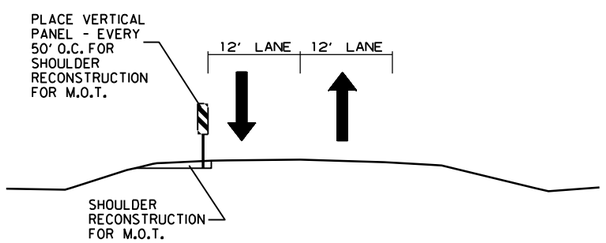

SECTION AA
SHOULDER RECONSTRUCTION
FOR M.O.T.

STATE OF ARKANSAS
REGISTERED PROFESSIONAL ENGINEER
No. 8940
MARK ASHER
12/12/2023

MAINTENANCE OF TRAFFIC DETAILS
STAGE 1

$FILE$ ...\7-Maintenance of Traffic.dgn
$DATE$ 11:21:20 AM

DATE REVISED	DATE REVISED	FED.RD. DIST.NO.	STATE	JOB NO.	SHEET NO.	TOTAL SHEETS
		6	ARK.	040781	34	115
		MAINTENANCE OF TRAFFIC DETAILS				

SEQUENCE OF CONSTRUCTION

STAGE 1
PLACE LEVELING WHERE INDICATED ON THE PLANS
RECONSTRUCT SHOULDER FOR M.O.T. ALONG HWY. 71
REMOVE PERMANENT PAVEMENT MARKINGS
PLACE CONSTRUCTION PAVEMENT MARKINGS
PLACE TEMP. BARRIER WALL/TRAFFIC DRUMS
ROUTE HWY. 71 TRAFFIC ONTO THE REBUILT SHOULDER AND LANES

STAGE 2
CONSTRUCT NEW PAVEMENT AS INDICATED ON THE PLANS
CONSTRUCT NEW BRIDGE
CONSTRUCT HWY. 252 TIE-IN
PLACE CONSTRUCTION PAVEMENT MARKINGS ON NEWLY CONSTRUCTED PAVEMENT
RELOCATE TEMP. BARRIER WALL/TRAFFIC DRUMS
ROUTE HWY. 71 TRAFFIC ON NEWLY CONSTRUCTED PAVEMENT

STAGE 3
CONSTRUCT REMAINING PORTIONS OF HWY. 71
REMOVE TEMP. BARRIER WALL
PLACE FINAL LAYER OF SURFACE COURSE
PLACE PERMANENT PAVEMENT MARKINGS
ROUTE HWY. 71 TRAFFIC ON NEWLY CONSTRUCTED LANES

CONSTRUCTION PAVEMENT MARKINGS
STA. 99+50.00 TO STA. 110+00.00

6" YELLOW CONTINUOUS	2100 L.F.
6" WHITE CONTINUOUS	2100 L.F.
RAISED PAVEMENT MARKINGS 80' ON CENTER	26 EA.

PAVEMENT MARKING REMOVAL
STA. 99+50.00 TO STA. 110+00.00

6" YELLOW CONTINUOUS	2100 L.F.
6" WHITE CONTINUOUS	2100 L.F.
RAISED PAVEMENT MARKINGS 80' ON CENTER	26 EA.

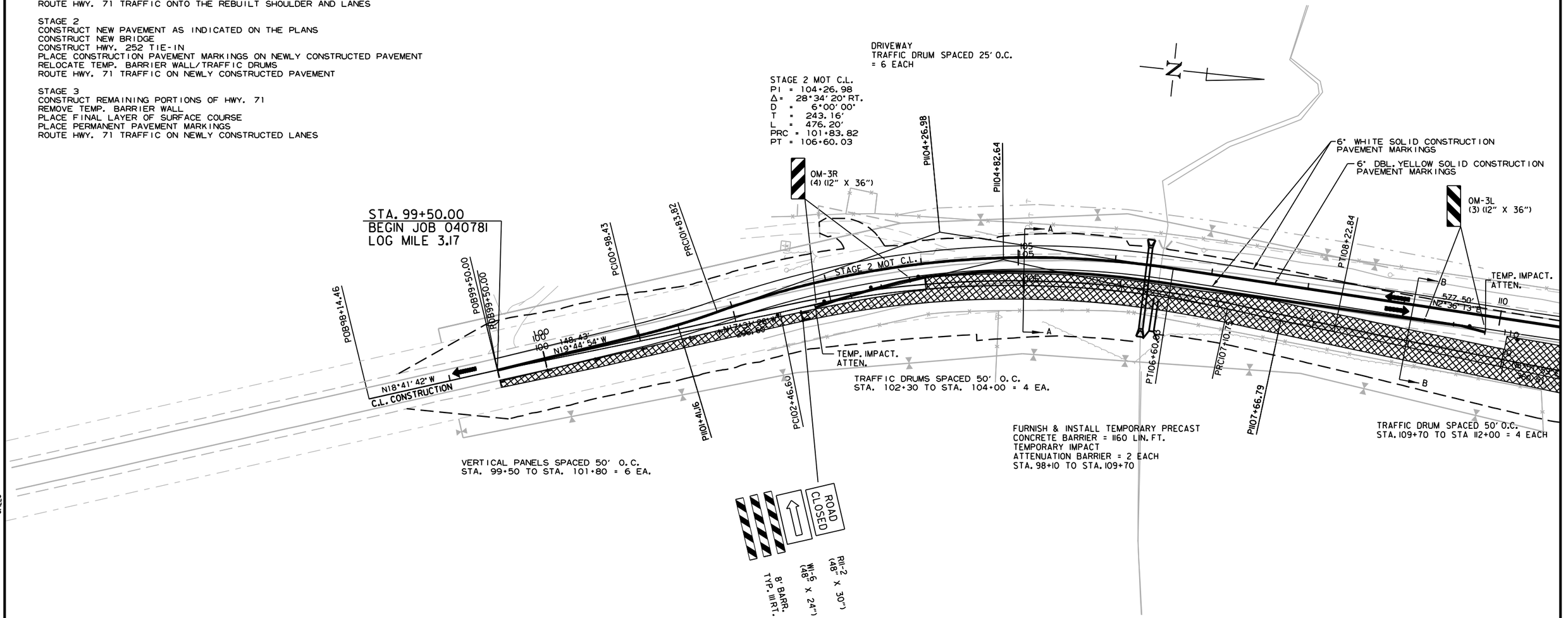

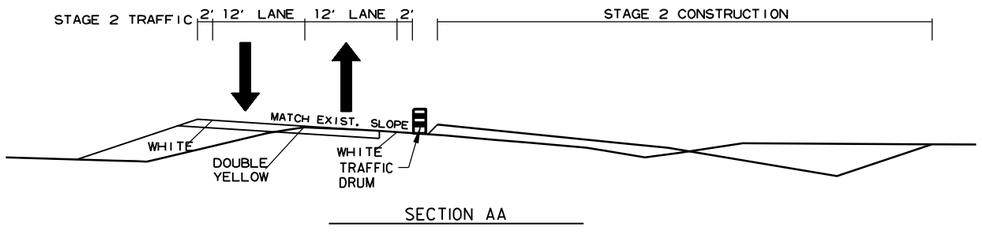

SECTION AA

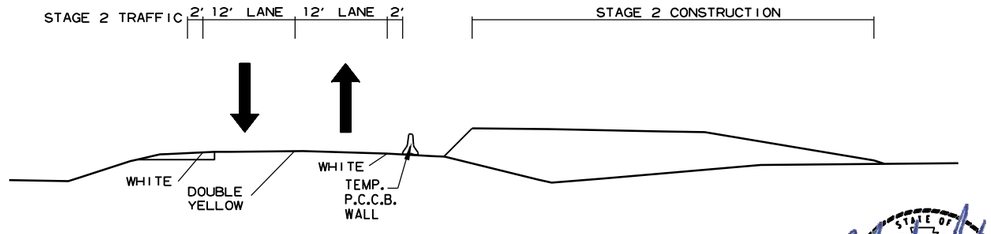

SECTION BB

STATE OF ARKANSAS
REGISTERED PROFESSIONAL ENGINEER
No. 8940
MARK ASHER

12/12/2023

MAINTENANCE OF TRAFFIC DETAILS
STAGE 2

$FILE$ ...\7-Maintenance of Traffic.dgn $DATE$ 11:29:24 AM

DATE REVISED	DATE REVISED	FED.RD. DIST.NO.	STATE	JOB NO.	SHEET NO.	TOTAL SHEETS
		6	ARK.	040781	35	115
		MAINTENANCE OF TRAFFIC DETAILS				

SEQUENCE OF CONSTRUCTION

STAGE 1
PLACE LEVELING WHERE INDICATED ON THE PLANS
RECONSTRUCT SHOULDER FOR M.O.T. ALONG HWY. 71
REMOVE PERMANENT PAVEMENT MARKINGS
PLACE CONSTRUCTION PAVEMENT MARKINGS
PLACE TEMP. BARRIER WALL/TRAFFIC DRUMS
ROUTE HWY. 71 TRAFFIC ONTO THE REBUILT SHOULDER AND LANES

STAGE 2
CONSTRUCT NEW PAVEMENT AS INDICATED ON THE PLANS
CONSTRUCT NEW BRIDGE
CONSTRUCT HWY. 252 TIE-IN
PLACE CONSTRUCTION PAVEMENT MARKINGS ON NEWLY CONSTRUCTED PAVEMENT
RELOCATE TEMP. BARRIER WALL/TRAFFIC DRUMS
ROUTE HWY. 71 TRAFFIC ON NEWLY CONSTRUCTED PAVEMENT

STAGE 3
CONSTRUCT REMAINING PORTIONS OF HWY. 71
REMOVE TEMP. BARRIER WALL
PLACE FINAL LAYER OF SURFACE COURSE
PLACE PERMANENT PAVEMENT MARKINGS
ROUTE HWY. 71 TRAFFIC ON NEWLY CONSTRUCTED LANES

DRIVEWAY
TRAFFIC DRUM SPACED 25' O.C.
= 6 EACH

TRAFFIC DRUM SPACED 50' O.C.
STA. 109+70 TO STA. 112+00 = 5 EACH

RELOCATE TEMPORARY PRECAST
CONCRETE BARRIER = 400 LIN. FT.
TEMPORARY IMPACT ATTENUATION
BARRIER (RELOCATION) = 2 EACH
STA. 113+20 TO STA 117+20

RELOCATE TEMPORARY PRECAST
CONCRETE BARRIER = 280 LIN. FT.
TEMPORARY IMPACT ATTENUATION
BARRIER (RELOCATION) = 2 EACH
STA. 122+45 TO STA 125+25

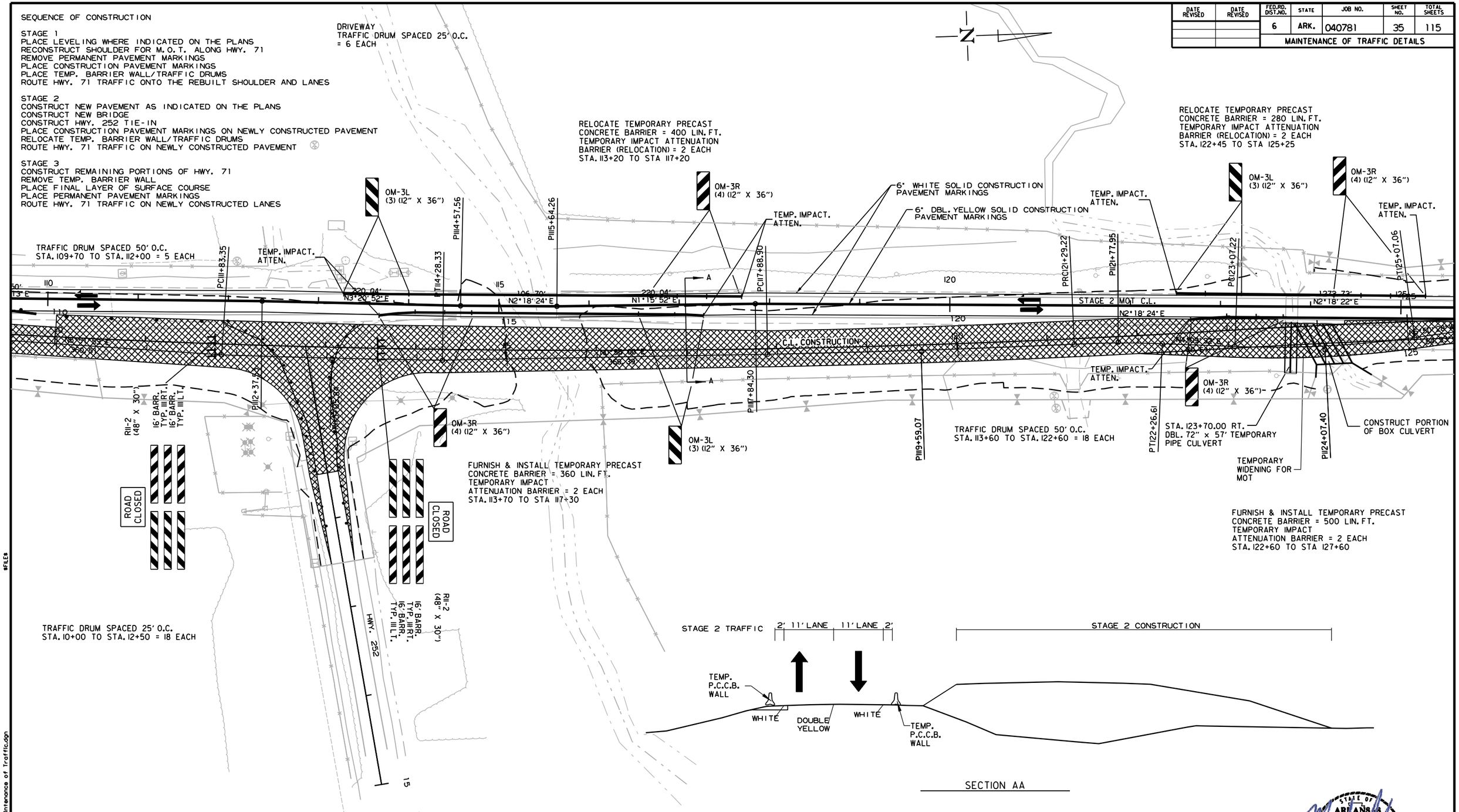

SECTION AA

CONSTRUCTION PAVEMENT MARKINGS
STA. 110+00.00 TO STA. 125+00.00

6" YELLOW CONTINUOUS	3000 L.F.
6" WHITE CONTINUOUS	3000 L.F.
RAISED PAVEMENT MARKINGS 80' ON CENTER	38 EA.

PAVEMENT MARKING REMOVAL
STA. 110+00.00 TO STA. 125+00.00

6" YELLOW CONTINUOUS	3000 L.F.
6" WHITE CONTINUOUS	3000 L.F.
RAISED PAVEMENT MARKINGS 80' ON CENTER	38 EA.

STATE OF ARKANSAS
REGISTERED PROFESSIONAL ENGINEER
No. 8940
MARK ASHER
12/12/2023

MAINTENANCE OF TRAFFIC DETAILS
STAGE 2

$FILE$ ...\7-Maintenance of Traffic.dgn $DATE$ 12/12/25 AM

DATE REVISED	DATE REVISED	FED.RD. DIST.NO.	STATE	JOB NO.	SHEET NO.	TOTAL SHEETS
		6	ARK.	040781	36	115
		MAINTENANCE OF TRAFFIC DETAILS				

SEQUENCE OF CONSTRUCTION

STAGE 1
PLACE LEVELING WHERE INDICATED ON THE PLANS
RECONSTRUCT SHOULDER FOR M.O.T. ALONG HWY. 71
REMOVE PERMANENT PAVEMENT MARKINGS
PLACE CONSTRUCTION PAVEMENT MARKINGS
PLACE TEMP. BARRIER WALL/TRAFFIC DRUMS
ROUTE HWY. 71 TRAFFIC ONTO THE REBUILT SHOULDER AND LANES

STAGE 2
CONSTRUCT NEW PAVEMENT AS INDICATED ON THE PLANS
CONSTRUCT NEW BRIDGE
CONSTRUCT HWY. 252 TIE-IN
PLACE CONSTRUCTION PAVEMENT MARKINGS ON NEWLY CONSTRUCTED PAVEMENT
RELOCATE TEMP. BARRIER WALL/TRAFFIC DRUMS
ROUTE HWY. 71 TRAFFIC ON NEWLY CONSTRUCTED PAVEMENT

STAGE 3
CONSTRUCT REMAINING PORTIONS OF HWY. 71
REMOVE TEMP. BARRIER WALL
PLACE FINAL LAYER OF SURFACE COURSE
PLACE PERMANENT PAVEMENT MARKINGS
ROUTE HWY. 71 TRAFFIC ON NEWLY CONSTRUCTED LANES

CONSTRUCTION PAVEMENT MARKINGS
STA. 125+00.00 TO STA. 132+00.00

6" YELLOW CONTINUOUS	1400 L.F.
6" WHITE CONTINUOUS	1400 L.F.
RAISED PAVEMENT MARKINGS 80' ON CENTER	18 EA.

PAVEMENT MARKING REMOVAL
STA. 125+00.00 TO STA. 132+00.00

6" YELLOW CONTINUOUS	1400 L.F.
6" WHITE CONTINUOUS	1400 L.F.
RAISED PAVEMENT MARKINGS 80' ON CENTER	18 EA.

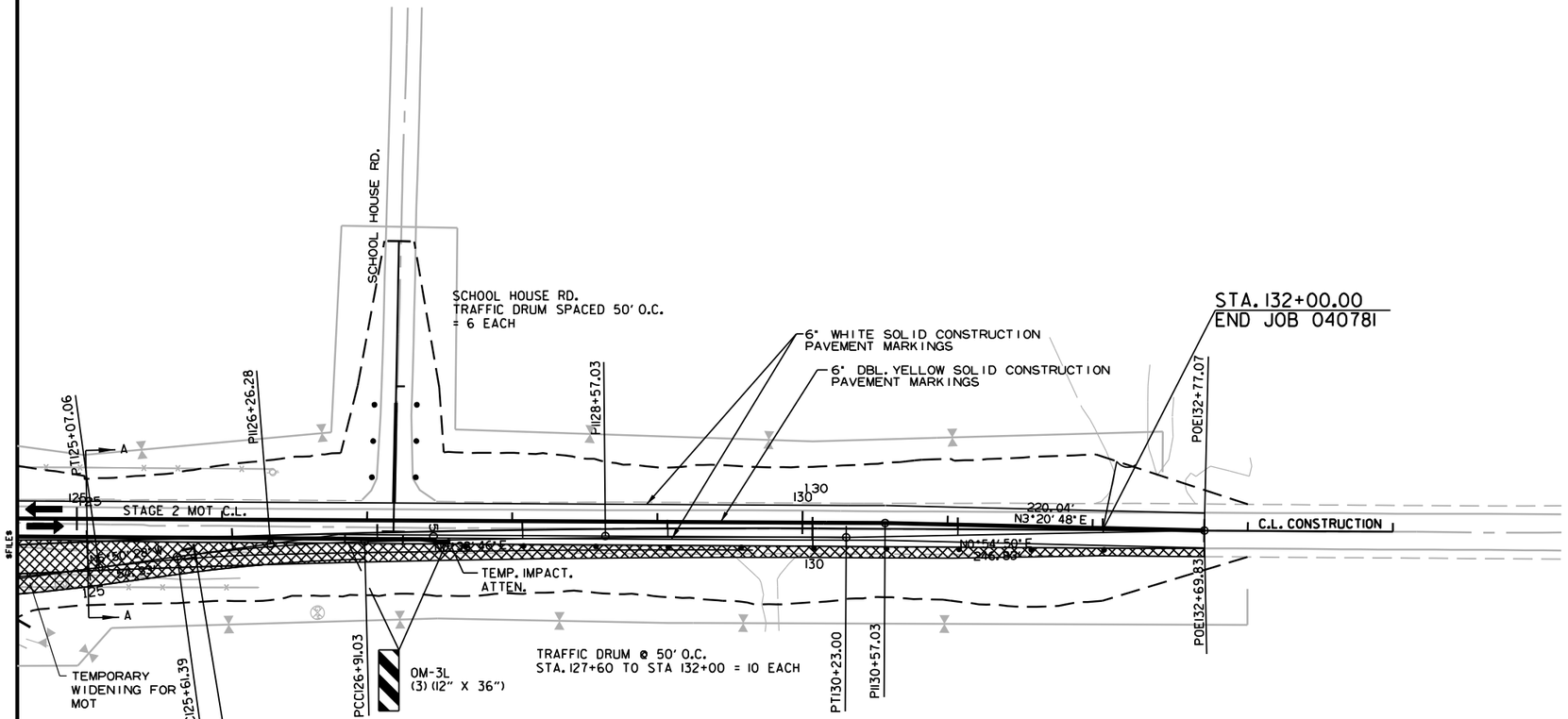

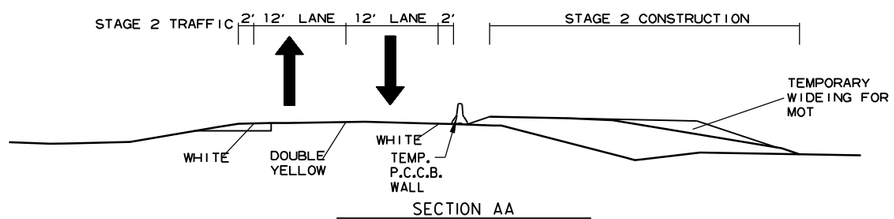

SECTION AA

STATE OF ARKANSAS
REGISTERED PROFESSIONAL ENGINEER
No. 8940
MARK ASHER

12/12/2023

MAINTENANCE OF TRAFFIC DETAILS
STAGE 2

$FILE$ ...\7-Maintenance of Traffic.dgn
$DATE$ 12:29 AM

DATE REVISED	DATE REVISED	FED.RD. DIST.NO.	STATE	JOB NO.	SHEET NO.	TOTAL SHEETS
		6	ARK.	040781	37	115
		MAINTENANCE OF TRAFFIC DETAILS				

SEQUENCE OF CONSTRUCTION

STAGE 1
PLACE LEVELING WHERE INDICATED ON THE PLANS
RECONSTRUCT SHOULDER FOR M.O.T. ALONG HWY. 71
REMOVE PERMANENT PAVEMENT MARKINGS
PLACE CONSTRUCTION PAVEMENT MARKINGS
PLACE TEMP. BARRIER WALL/TRAFFIC DRUMS
ROUTE HWY. 71 TRAFFIC ONTO THE REBUILT SHOULDER AND LANES

STAGE 2
CONSTRUCT NEW PAVEMENT AS INDICATED ON THE PLANS
CONSTRUCT NEW BRIDGE
CONSTRUCT HWY. 252 TIE-IN
PLACE CONSTRUCTION PAVEMENT MARKINGS ON NEWLY CONSTRUCTED PAVEMENT
RELOCATE TEMP. BARRIER WALL/TRAFFIC DRUMS
ROUTE HWY. 71 TRAFFIC ON NEWLY CONSTRUCTED PAVEMENT

STAGE 3
CONSTRUCT REMAINING PORTIONS OF HWY. 71
REMOVE TEMP. BARRIER WALL
PLACE FINAL LAYER OF SURFACE COURSE
PLACE PERMANENT PAVEMENT MARKINGS
ROUTE HWY. 71 TRAFFIC ON NEWLY CONSTRUCTED LANES

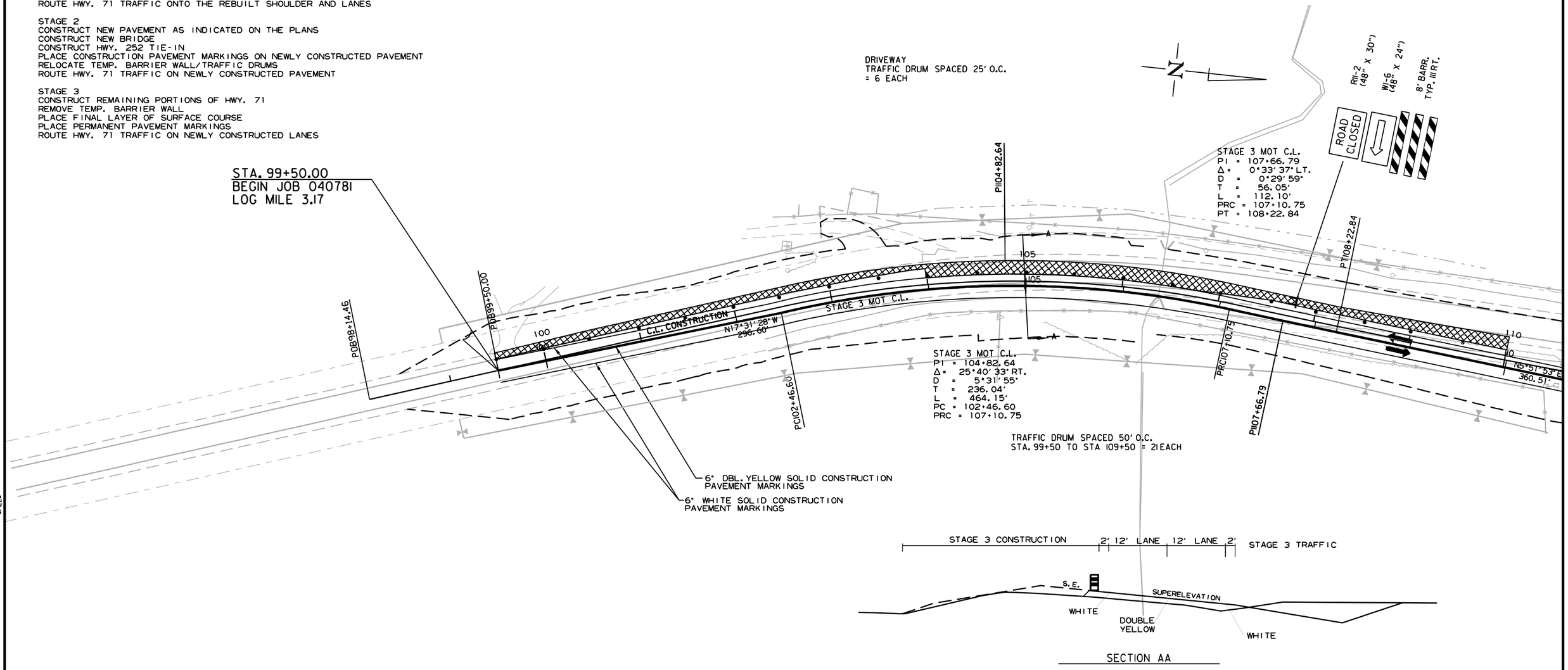

SECTION AA

CONSTRUCTION PAVEMENT MARKINGS
STA. 99+50.00 TO STA. 110+00.00

6" YELLOW CONTINUOUS	2100 L.F.
6" WHITE CONTINUOUS	2100 L.F.
RAISED PAVEMENT MARKINGS 80' ON CENTER	26 EA.

PAVEMENT MARKING REMOVAL
STA. 99+50.00 TO STA. 110+00.00

6" YELLOW CONTINUOUS	2100 L.F.
6" WHITE CONTINUOUS	2100 L.F.

STATE OF ARKANSAS
REGISTERED PROFESSIONAL ENGINEER
No. 8940
MARK ASHER

12/12/2023

MAINTENANCE OF TRAFFIC DETAILS
STAGE 3

$FILE$
...\7-Maintenance of Traffic.dgn
$DATE$ 11:27:30 AM

DATE REVISED	DATE REVISED	FED.RD. DIST.NO.	STATE	JOB NO.	SHEET NO.	TOTAL SHEETS
		6	ARK.	040781	38	115
		MAINTENANCE OF TRAFFIC DETAILS				

SEQUENCE OF CONSTRUCTION

STAGE 1
PLACE LEVELING WHERE INDICATED ON THE PLANS
RECONSTRUCT SHOULDER FOR M.O.T. ALONG HWY. 71
REMOVE PERMANENT PAVEMENT MARKINGS
PLACE CONSTRUCTION PAVEMENT MARKINGS
PLACE TEMP. BARRIER WALL/TRAFFIC DRUMS
ROUTE HWY. 71 TRAFFIC ONTO THE REBUILT SHOULDER AND LANES

STAGE 2
CONSTRUCT NEW PAVEMENT AS INDICATED ON THE PLANS
CONSTRUCT NEW BRIDGE
CONSTRUCT HWY. 252 TIE-IN
PLACE CONSTRUCTION PAVEMENT MARKINGS ON NEWLY CONSTRUCTED PAVEMENT
RELOCATE TEMP. BARRIER WALL/TRAFFIC DRUMS
ROUTE HWY. 71 TRAFFIC ON NEWLY CONSTRUCTED PAVEMENT

STAGE 3
CONSTRUCT REMAINING PORTIONS OF HWY. 71
REMOVE TEMP. BARRIER WALL
PLACE FINAL LAYER OF SURFACE COURSE
PLACE PERMANENT PAVEMENT MARKINGS
ROUTE HWY. 71 TRAFFIC ON NEWLY CONSTRUCTED LANES

DRIVEWAY
TRAFFIC DRUM SPACED 25' O.C.
= 6 EACH

ROAD CLOSED

RII-2 (48" X 30")

24' BARR. TYP. III RT.
24' BARR. TYP. III LT.

TRAFFIC DRUM SPACED 50' O.C.
STA. 110+10 TO STA. 122+40 = 25 EACH

STAGE 3 MOT C.L.
PI = 119+59.07
Δ = 1°42'03" LT.
D = 0°29'59"
T = 170.17'
L = 340.32'
PC = 117+88.90
PRC = 121+19.22

STAGE 3 MOT C.L.
PI = 124+07.40
Δ = 10°00'00" LT.
D = 5°00'14"
T = 100.17'
L = 199.84'
PC = 123+07.22
PT = 125+07.03

OM-3L (3) (12" X 36")

CONSTRUCT PORTION OF BOX CULVERT

TEMP. IMPACT. ATTEN.

PCII+83.35
PTII4+28.33
PCII7+88.90
PRC121+29.22
PII21+77.95
PC123+07.22
PT125+07.06
PII3+05.84
PII9+59.07
PT122+26.61
PII24+07.40

110 115 120 125

N5°51'53"E 360.51' STAGE 3 MOT C.L.

N0°56'00"E

C.L. CONSTRUCTION

N4°09'32"E

N5°50'28"W 54.33'

STA. 123+70.00 RT.
IN PLACE
DBL. 72"x57' TEMPORARY
PIPE CULVERT

STAGE 3 MOT C.L.
PI = 113+05.84
Δ = 1°13'25" LT.
D = 0°29'58"
T = 122.49'
L = 244.98'
PC = 111+83.35
PT = 114+28.33

6" DBL. YELLOW SOLID CONSTRUCTION PAVEMENT MARKINGS

6" WHITE SOLID CONSTRUCTION PAVEMENT MARKINGS

STAGE 3 MOT C.L.
PI = 121+77.95
Δ = 4°52'24" RT.
D = 5°00'14"
T = 48.72'
L = 97.39'
PRC = 121+29.22
PT = 122+26.61

DRIVEWAY
TRAFFIC DRUM SPACED 25' O.C.
= 6 EACH

RELOCATING TEMPORARY PRECAST CONCRETE BARRIER = 320 LIN. FT.
TEMPORARY IMPACT ATTENUATION BARRIER (RELOCATION) = 2 EACH
STA. 122+40 TO STA 125+60

HWY. 252

15

STAGE 3 CONSTRUCTION | 2' | 12' LANE | 12' LANE | 2' | STAGE 3 TRAFFIC

0.040'/' 0.020'/' 0.020'/' 0.040'/'

WIDENING FOR M.O.T.

WHITE
DOUBLE YELLOW
WHITE

SECTION AA

CONSTRUCTION PAVEMENT MARKINGS
STA. 110+00.00 TO STA. 114+22.00 & STA. 116+56.00 TO STA. 125+00.00

6" YELLOW CONTINUOUS	2532 L.F.
6" WHITE CONTINUOUS	2532 L.F.
RAISED PAVEMENT MARKINGS 80' ON CENTER	35 EA.

REMOVABLE CONSTRUCTION PAVEMENT MARKINGS
STA. 114+22.00 TO STA. 116+56.00

6" YELLOW CONTINUOUS	468 L.F.
6" WHITE CONTINUOUS	468 L.F.
RAISED PAVEMENT MARKINGS 80' ON CENTER	3 EA.

PAVEMENT MARKING REMOVAL
STA. 110+00.00 TO STA. 125+00.00

6" YELLOW CONTINUOUS	3000 L.F.
6" WHITE CONTINUOUS	3000 L.F.
RAISED PAVEMENT MARKINGS 80' ON CENTER	38 EA.

STATE OF ARKANSAS
REGISTERED PROFESSIONAL ENGINEER
No. 8940
MARK ASHER

12/12/2023

MAINTENANCE OF TRAFFIC DETAILS
STAGE 3

$FILE$ ...\7-Maintenance of Traffic.dgn $DATE$ 12:36 AM

DATE REVISED	DATE REVISED	FED.RD. DIST.NO.	STATE	JOB NO.	SHEET NO.	TOTAL SHEETS
		6	ARK.	040781	39	115
		MAINTENANCE OF TRAFFIC DETAILS				

SEQUENCE OF CONSTRUCTION

STAGE 1
PLACE LEVELING WHERE INDICATED ON THE PLANS
RECONSTRUCT SHOULDER FOR M.O.T. ALONG HWY. 71
REMOVE PERMANENT PAVEMENT MARKINGS
PLACE CONSTRUCTION PAVEMENT MARKINGS
PLACE TEMP. BARRIER WALL/TRAFFIC DRUMS
ROUTE HWY. 71 TRAFFIC ONTO THE REBUILT SHOULDER AND LANES

STAGE 2
CONSTRUCT NEW PAVEMENT AS INDICATED ON THE PLANS
CONSTRUCT NEW BRIDGE
CONSTRUCT HWY. 252 TIE-IN
PLACE CONSTRUCTION PAVEMENT MARKINGS ON NEWLY CONSTRUCTED PAVEMENT
RELOCATE TEMP. BARRIER WALL/TRAFFIC DRUMS
ROUTE HWY. 71 TRAFFIC ON NEWLY CONSTRUCTED PAVEMENT

STAGE 3
CONSTRUCT REMAINING PORTIONS OF HWY. 71
REMOVE TEMP. BARRIER WALL
PLACE FINAL LAYER OF SURFACE COURSE
PLACE PERMANENT PAVEMENT MARKINGS
ROUTE HWY. 71 TRAFFIC ON NEWLY CONSTRUCTED LANES

CONSTRUCTION PAVEMENT MARKINGS
STA. 125+00.00 TO STA. 132+00.00

6" YELLOW CONTINUOUS	1400 L.F.
6" WHITE CONTINUOUS	1400 L.F.
RAISED PAVEMENT MARKINGS 80' ON CENTER	18 EA.

PAVEMENT MARKING REMOVAL
STA. 125+00.00 TO STA. 132+00.00

6" YELLOW CONTINUOUS	1400 L.F.
6" WHITE CONTINUOUS	1400 L.F.

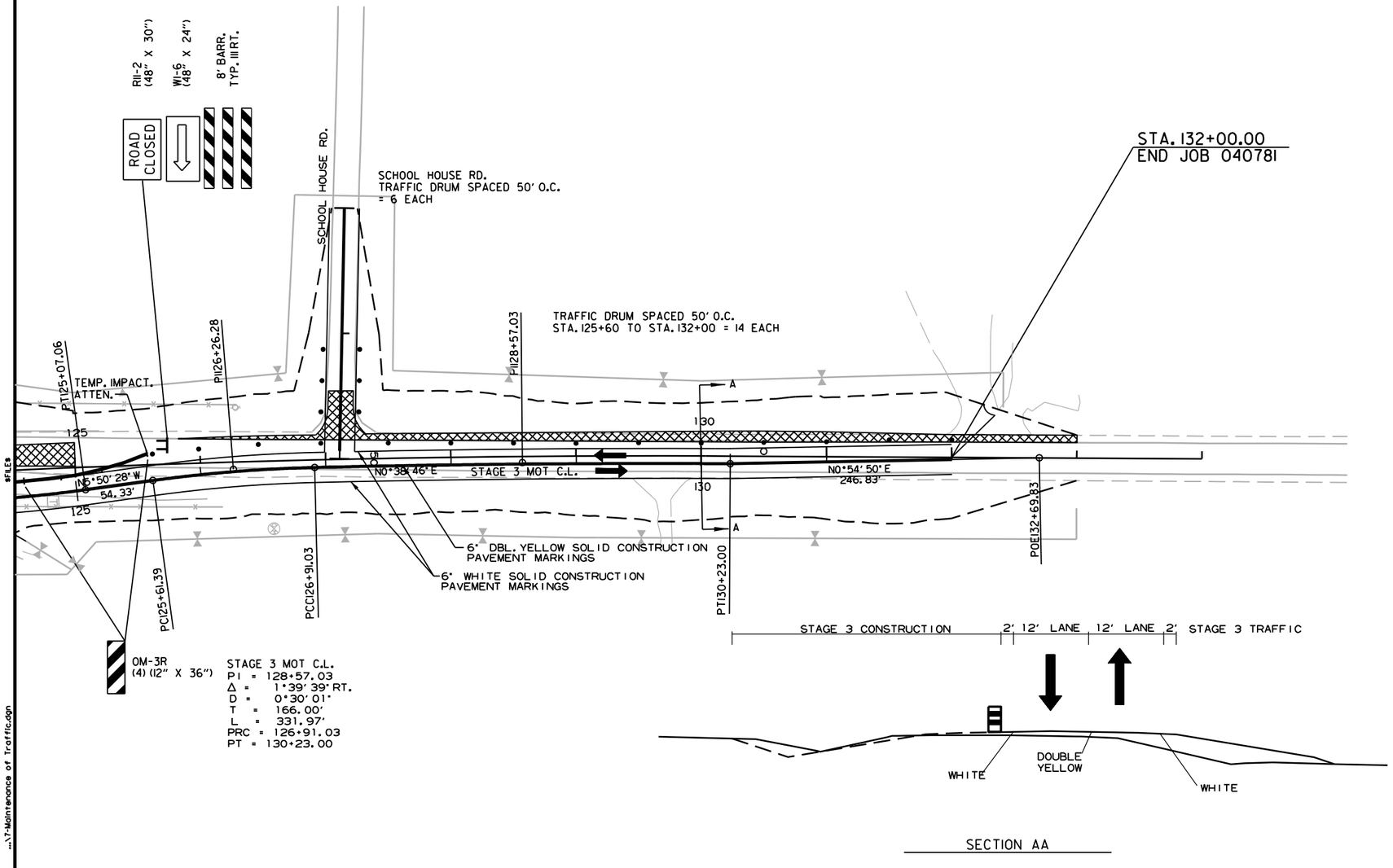

SECTION AA

STATE OF ARKANSAS
REGISTERED PROFESSIONAL ENGINEER
No. 8940
MARK ASHER
12/12/2023

MAINTENANCE OF TRAFFIC DETAILS
STAGE 3

#FILE# ...\7-Maintenance of Traffic.dgn
#DATE# 12:36 AM

DATE REVISED	DATE REVISED	FED.RD. DIST.NO.	STATE	JOB NO.	SHEET NO.	TOTAL SHEETS
		6	ARK.	040781	40	115
		PERMANENT PAVEMENT MARKING DETAILS				

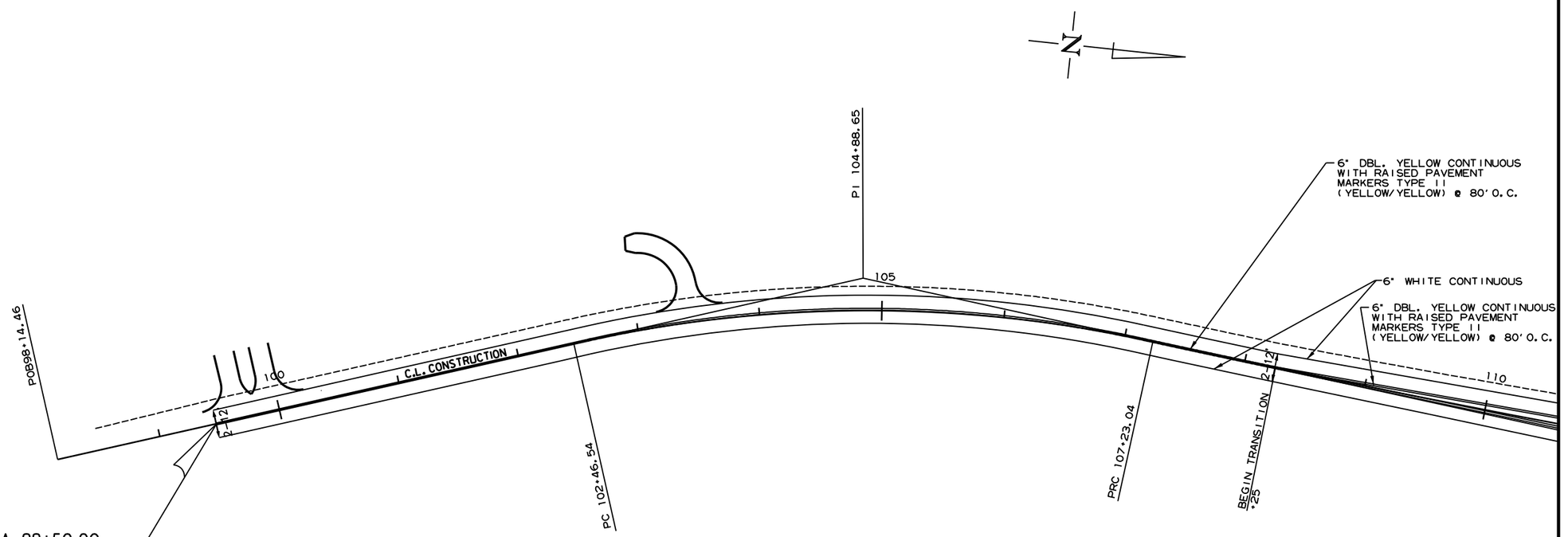

NOTE:
THE 6" YELLOW STRIPING QUANTITY HAS BEEN ESTIMATED BASED ON A DOUBLE YELLOW CENTERLIE STRIPE FOR THE ENTIRE PROJECT. THE PROJECT MUST BE MARKED FOR PASSING/NO PASSING ZONES PRIOR TO THE PLACEMENT OF ANY FINAL STRIPING. CONTACT THE MAINTENANCE DIVISION AFTER THE FINAL LIFT OF SURFACE COURSE HAS BEE PLACED TO SCHEDULE THE ZONING OF THE PROJECT.

THERMOPLASTIC PAVEMENT MARKINGS
HWY. 71
STA. 99+50.00 TO STA. 110+00.00

6" YELLOW CONTINUOUS	2275 L.F.
6" WHITE CONTINUOUS	2100 L.F.

RAISED PAVEMENT MARKINGS
HWY. 71
STA. 99+50.00 TO STA. 110+00.00

RAISED PAVEMENT MARKERS TYPE II (YELLOW/YELLOW)	29 EA.

STATE OF ARKANSAS
REGISTERED PROFESSIONAL ENGINEER
No. 8940
MARK ASHER

12/12/2023

PERMANENT PAVEMENT MARKING DETAILS

$DATE$ M22:07 AM ...\8-Permanent Pavement Marking Details.dgn $FILE$

DATE REVISED	DATE REVISED	FED.RD. DIST.NO.	STATE	JOB NO.	SHEET NO.	TOTAL SHEETS
		6	ARK.	040781	41	115
		PERMANENT PAVEMENT MARKING DETAILS				

NOTE:
THE 6" YELLOW STRIPING QUANTITY HAS BEEN ESTIMATED BASED ON A DOUBLE YELLOW CENTERLIE STRIPE FOR THE ENTIRE PROJECT. THE PROJECT MUST BE MARKED FOR PASSING/NO PASSING ZONES PRIOR TO THE PLACEMENT OF ANY FINAL STRIPING. CONTACT THE MAINTENANCE DIVISION AFTER THE FINAL LIFT OF SURFACE COURSE HAS BEE PLACED TO SCHEDULE THE ZONING OF THE PROJECT.

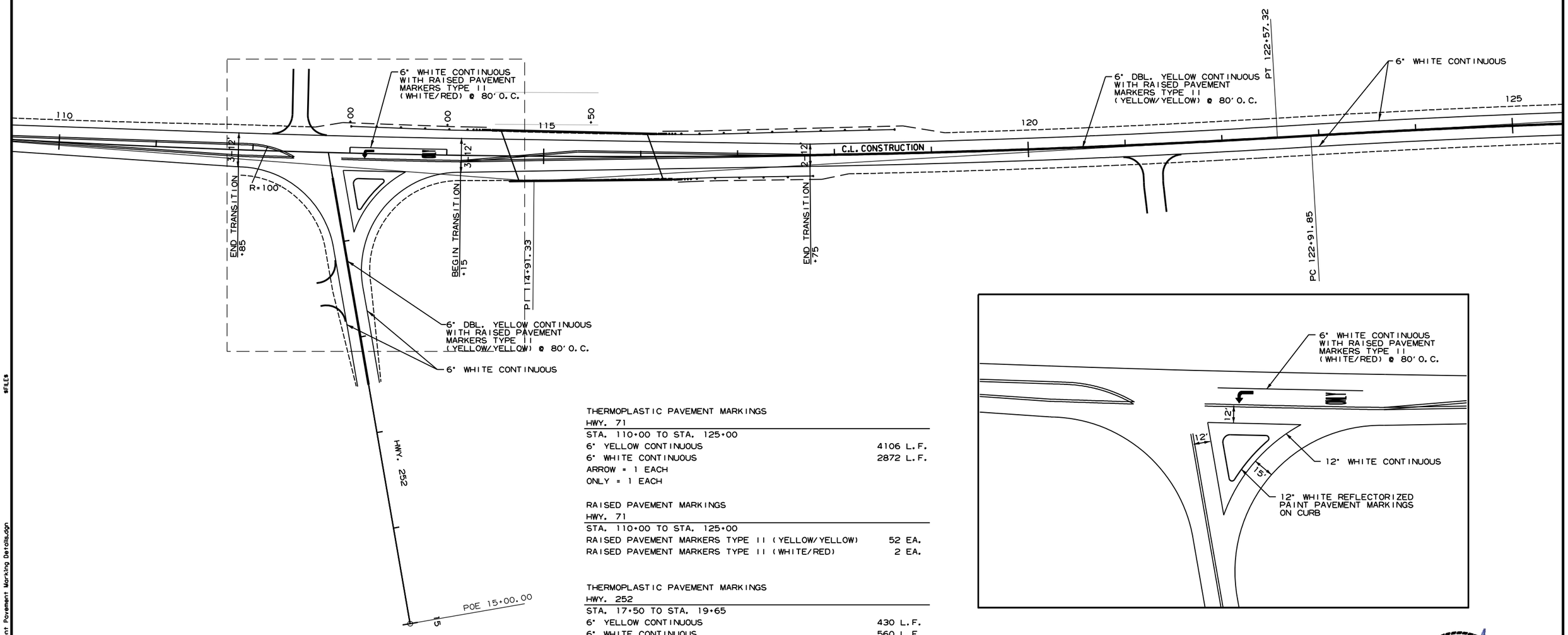

THERMOPLASTIC PAVEMENT MARKINGS
HWY. 71

STA. 110+00 TO STA. 125+00	
6" YELLOW CONTINUOUS	4106 L.F.
6" WHITE CONTINUOUS	2872 L.F.
ARROW = 1 EACH	
ONLY = 1 EACH	

RAISED PAVEMENT MARKINGS
HWY. 71

STA. 110+00 TO STA. 125+00	
RAISED PAVEMENT MARKERS TYPE II (YELLOW/YELLOW)	52 EA.
RAISED PAVEMENT MARKERS TYPE II (WHITE/RED)	2 EA.

THERMOPLASTIC PAVEMENT MARKINGS
HWY. 252

STA. 17+50 TO STA. 19+65	
6" YELLOW CONTINUOUS	430 L.F.
6" WHITE CONTINUOUS	560 L.F.
12" WHITE CONTINUOUS	320 L.F.

REFLECTORIZED PAINT PAVEMENT MARKINGS
HWY. 252

STA. 17+50 TO STA. 19+65	
12" WHITE CONTINUOUS	105 L.F.

RAISED PAVEMENT MARKINGS
HWY. 252

STA. 17+50 TO STA. 19+65	
RAISED PAVEMENT MARKERS TYPE II (YELLOW/YELLOW)	6 EA.

STATE OF ARKANSAS
REGISTERED PROFESSIONAL ENGINEER
No. 8940
MARK ASHER
12/12/2023

PERMANENT PAVEMENT MARKING DETAILS

$FILES
$DATES 11:22:08 AM ...\8-Permanent Pavement Marking Details.dgn

DATE REVISED	DATE REVISED	FED.RD. DIST.NO.	STATE	JOB NO.	SHEET NO.	TOTAL SHEETS
		6	ARK.	040781	42	115
		PERMANENT PAVEMENT MARKING DETAILS				

NOTE:
THE 6" YELLOW STRIPING QUANTITY HAS BEEN ESTIMATED BASED ON A DOUBLE YELLOW CENTERLIE STRIPE FOR THE ENTIRE PROJECT. THE PROJECT MUST BE MARKED FOR PASSING/NO PASSING ZONES PRIOR TO THE PLACEMENT OF ANY FINAL STRIPING. CONTACT THE MAINTENANCE DIVISION AFTER THE FINAL LIFT OF SURFACE COURSE HAS BEE PLACED TO SCHEDULE THE ZONING OF THE PROJECT.

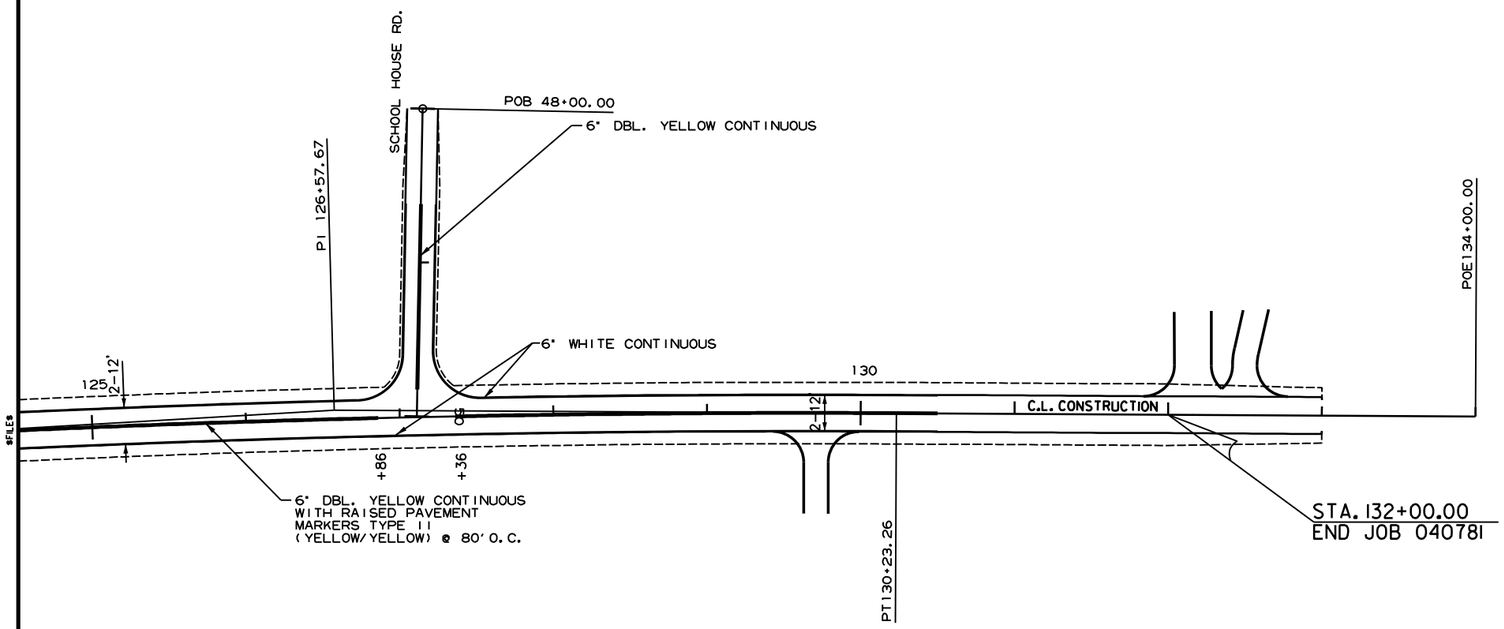

THERMOPLASTIC PAVEMENT MARKINGS
HWY. 71
STA. 125+00 TO STA. 133+00

6" YELLOW CONTINUOUS	1500 L.F.
6" WHITE CONTINUOUS	1520 L.F.

RAISED PAVEMENT MARKINGS
HWY. 71
STA. 125+00 TO STA. 133+00

RAISED PAVEMENT MARKERS TYPE II (YELLOW/YELLOW)	19 EA.

REFLECTORIZED PAINT PAVEMENT MARKINGS
SCHOOL HOUSE RD.
STA. 48+62 TO STA. 49+82

6" YELLOW CONTINUOUS	240 L.F.

STATE OF ARKANSAS
REGISTERED PROFESSIONAL ENGINEER
No. 8940
MARK ASHER
12/12/2023

PERMANENT PAVEMENT MARKING DETAILS

#FILE# ...\9-Permanent Pavement Marking Details.dgn
#DATE# 12/12/2023 AM

DATE REVISED	DATE REVISED	FED.RD. DIST.NO.	STATE	JOB NO.	SHEET NO.	TOTAL SHEETS
		6	ARK.	040781	43	115
		QUANTITIES				

ADVANCE WARNING SIGNS AND DEVICES

SIGN NUMBER	DESCRIPTION	SIGN SIZE	STAGE 1	STAGE 2	STAGE 3	MAXIMUM NUMBER REQUIRED	TOTAL SIGNS REQUIRED		VERTICAL PANELS	TRAFFIC DRUMS	BARRICADES (TYPE III)		FURNISHING & INSTALLING PRECAST CONC. BARRIER	RELOCATING PRECAST CONCRETE BARRIER	TEMPORARY IMPACT ATTENUATION BARRIER	TEMP. IMPACT ATTEN.BARR. (REPAIR)	TEMP. IMPACT ATTEN.BARR. (RELOCATION)
											RIGHT	LEFT					
			LIN. FT. - EACH				NO.	SQ. FT.	EACH				LIN. FT.		EACH		
W20-1	ROAD WORK 1500 FT.	48"x48"	3	3	3	3	3	48.0									
W20-1	ROAD WORK 1000 FT.	48"x48"	3	3	3	3	3	48.0									
W20-1	ROAD WORK 500 FT.	48"x48"	3	3	3	3	3	48.0									
W20-1	ROAD WORK AHEAD	48"x48"	1	1	1	1	1	16.0									
G20-2	END ROAD WORK	48"x24"	4	4	4	4	4	32.0									
R11-2	ROAD CLOSED	48"x30"		4	3	4	4	40.0									
OM-3L	OBJECT MARKER	12"x36"	6	15	3	15	15	45.0									
OM-3R	OBJECT MARKER	12"x36"	8	20	4	20	20	60.0									
W1-6	LARGE ARROW	48"x24"		2	2	2	2	16.0									
R4-1	DO NOT PASS	24"x30"	4	4	4	4	4	20.0									
W21-5a	RIGHT SHOULDER CLOSED	36"x36"	2	2	2	2	2	18.0									
W8-1	BUMP	30"x30"	2	2	2	2	2	12.5									
	VERTICAL PANELS		48	16		48			48								
	TRAFFIC DRUMS		18	67	327	327				327							
	TYPE III BARRICADE-RT. (8')			1	1	1					8						
	TYPE III BARRICADE-RT. (16')			2		2					32						
	TYPE III BARRICADE-LT. (16')			3	1	3						48					
	TYPE III BARRICADE-RT. (24')				1	1					24						
	TYPE III BARRICADE-LT. (24')				1	1						24					
	FURNISHING AND INSTALLING PRECAST CONCRETE BARRIER		680	2020		2700							2700				
	RELOCATING PRECAST CONCRETE BARRIER			680	320	1000								1000			
	TEMPORARY IMPACT ATTENUATION BARRIER		4	6		10									10		
	TEMPORARY IMPACT ATTENUATION BARRIER (REPAIR)		4	10		14										14	
	TEMPORARY IMPACT ATTENUATION BARRIER (RELOCATION)			4	2	6											6
TOTALS:								**403.5**	**48**	**327**	**64**	**72**	**2700**	**1000**	**10**	**14**	**6**

NOTE: THIS IS A HIGH TRAFFIC VOLUME ROAD AS DEFINED IN SECTION 604.03, S˜ANDARD SPECIFICATIONS FOR HIGHWAY CONSTRUCTION.

CONSTRUCTION PAVEMENT MARKINGS AND PERMANENT PAVEMENT MARKINGS

DESCRIPTION	STAGE 1	STAGE 2	END OF JOB	REMOVAL OF PERMANENT PAVEMENT MARKINGS	CONSTRUCTION PAVEMENT MARKINGS	REMOVAL OF CONSTRUCTION PAVEMENT MARKINGS	REMOVABLE CONSTRUCTION PAVEMENT MARKINGS	RAISED PAVEMENT MARKERS		THERMOPLASTIC PAVEMENT MARKING					REFLECTORIZED PAINT PAVEMENT MARKING
								TYPE II (WHITE/RED)	TYPE II (YELLOW/YELLOW)	6" WHITE	6" YELLOW	12" WHITE	WORDS	ARROWS	12" WHITE
	LIN. FT. - EACH			LIN. FT.		LIN. FT.		EACH		LIN. FT.			EACH		LIN. FT.
REMOVAL OF PERMANENT PAVEMENT MARKINGS	13000			13000											
CONSTRUCTION PAVEMENT MARKINGS	13000	12064			25064										
REMOVAL OF CONSTRUCTION PAVEMENT MARKINGS		3000				3000									
REMOVABLE CONSTRUCTION PAVEMENT MARKINGS		936					936								
RAISED PAVEMENT MARKERS TYPE II (WHITE/RED)			2					2							
RAISED PAVEMENT MARKERS TYPE II (YELLOW/YELLOW)			106						106						
THERMOPLASTIC PAVEMENT MARKING WHITE (6")			7052							7052					
THERMOPLASTIC PAVEMENT MARKING YELLOW (6")			8551								8551				
THERMOPLASTIC PAVEMENT MARKING WHITE (12")			320									320			
THERMOPLASTIC PAVEMENT MARKING (WORDS)			1										1		
THERMOPLASTIC PAVEMENT MARKING (ARROWS)			1											1	
REFLECTORIZED PAINT PAVEMENT MARKING WHITE (12")			105												105
TOTALS:				**13000**	**25064**	**3000**	**936**	**2**	**106**	**7052**	**8551**	**320**	**1**	**1**	**105**

NOTE: THIS IS A HIGH TRAFFIC VOLUME ROAD AS DEFINED IN SECTION 604.03, STANDARD SPECIFICATIONS FOR HIGHWAY CONSTRUCTION.

NOTE: THE 6" YELLOW STRIPING QUANTITY HAS BEEN ESTIMATED BASED ON A DOUBLE YELLOW CENTERLINE STRIPE FOR THE ENTIRE PROJECT.
THE PROJECT MUST BE MARKED FOR PASSING/NO PASSING ZONES PRIOR TO THE PLACEMENT OF ANY FINAL STRIPING.
CONTACT THE MAINTENANCE DIVISION AFTER THE FINAL LIFT OF SURFACE COURSE HAS BEEN PLACED TO SCHEDULE THE ZONING OF THE PROJECT.

STATE OF ARKANSAS
REGISTERED PROFESSIONAL ENGINEER
No. 8940
MARK ASHER

12/12/2023

T:\Job\03337300 ArDot TO 144 Job 040781\700 CADD Files\770 Roadway Files\Drawings\00-Quantities.dgn
12/12/2023 11:22:17 AM ...\0Drawings\00-Quantities.dgn

DATE REVISED	DATE REVISED	FED.RD. DIST.NO.	STATE	JOB NO.	SHEET NO.	TOTAL SHEETS
		6	ARK.	040781	44	115
		QUANTITIES				

CLEARING AND GRUBBING

STATION	STATION	LOCATION	CLEARING	GRUBBING
			STATION	
102+50	103+00	C.L. HWY. 71	1	1
105+00	111+00	C.L. HWY. 71	6	6
113+30	115+00	C.L. HWY. 72	2	2
116+00	119+50	C.L. HWY. 73	4	4
TOTALS:			13	13

REMOVAL AND DISPOSAL OF ITEMS

STATION	STATION	LOCATION	CURB	GUARDRAIL	CATTLE GUARD
			LIN. FT.	LIN. FT.	EACH
112+78		HWY. 252 INTERSECTION	380		
113+18	114+18	C.L. HWY. 71 LT.		100	
113+68	114+18	C.L. HWY. 71 RT.		50	
115+86	117+61	C.L. HWY. 71 LT.		175	
115+86	116+86	C.L. HWY. 71 RT.		100	
121+27		C.L. HWY. 71 RT.			1
121+67	124+93	C.L. HWY. 71 RT.		326	
122+45	125+20	C.L. HWY. 71 LT.		275	
TOTALS:			380	1026	1

NOTE: THE QUANTITY SHOWN ABOVE FOR THE REMOVAL AND DISPOSAL OF GUARDRAIL SHALL INCLUDE THE REMOVAL AND DISPOSAL OF ALL GUARDRAIL TERMINALS AND TERMNAL ANCHOR POSTS.

REMOVAL AND DISPOSAL OF FENCE

STATION	STATION	LOCATION	FENCE
			LIN. FT.
99+00	110+00	HWY. 71 RT.	1100
104+50	108+66	HWY. 71 LT.	416
116+08	126+30	HWY. 71 RT.	1022
123+92	126+30	HWY. 71 LT.	238
TOTALS:			2776

REMOVAL AND DISPOSAL OF CULVERTS

STATION	DESCRIPTION	PIPE CULVERTS	BOX CULVERTS
		EACH	EACH
121+27	C.L. HWY. 71 RT.	1	
123+70	C.L. HWY. 71 RT.		1
TOTALS:		1	1

NOTE: QUANTITIES SHOWN ABOVE SHALL INCLUDE REMOVAL & DISPOSAL OF ALL HEADWALLS AND FLARED END SECTIONS IF APPLICABLE.

EARTHWORK

STATION	STATION	LOCATION / DESCRIPTION	UNCLASSIFIED EXCAVATION	COMPACTED EMBANKMENT
			CU. YD.	
ENTIRE	PROJECT	STAGE 1-MAIN LANES	931	693
ENTIRE	PROJECT	STAGE 2-MAIN LANES	3203	17756
ENTIRE	PROJECT	STAGE 3-MAIN LANES	7507	20444
ENTIRE	PROJECT	APPROACHES		185
48+00	49+87	SCHOOL HOUSE RD.	286	
10+28	12+50	HWY. 252	550	23
		HWY. 252 - REMOVAL OF ASPHALT ISLANDS	77	
106+38		CHANNEL CHANGE	43	
123+97		CHANNEL CHANGE	1256	
TOTALS:			13793	39101

SOIL LOG

STATION	LATITUDE			LONGITUDE			LOCATION	DEPTH	LIQUID LIMIT	PLASTICITY INDEX	AASHTO CLASSIFICATION	COLOR
	DEG	MIN	SEC	DEG	MIN	SEC		FEET				
114+30	35	6	34.00	94	16	3.00	S1 15 LT	2.5-3.5	34	12	A-2-6	BRN - DRK GRAY
114+30	35	6	34.00	94	16	3.00	S1 15 LT	6.5-7.5	40	17	A-6-6	BRN - DRK GRAY
114+30	35	6	34.00	94	16	3.00	S1 15 LT	9.0-10.0	29	7	SHALE	DARK GRAY
115+12	35	6	35.00	94	16	4.00	S2 20 LT	0-1			A-1-a	DARK GRAY
116+22	35	6	35.00	94	16	4.00	S3 10 LT	0.5-3.5	32	10	A-4	BROWN
116+22	35	6	35.00	94	16	4.00	S3 10 LT	4.5-5.5	35	14	SHALE	BRN - DRK GRAY

SOIL CHARACTERISTICS TABULATED ABOVE ARE REPRESENTATIVE AT THE LOCATION OF THE SAMPLE, AND FROM SURFACE INDICATIONS ARE TYPICAL FOR THE LIMITS SHOWN. THESE DATA ARE SHOWN FOR INFORMATION ONLY. THE STATE WILL NOT BE RESPONSIBLE FOR VARIATIONS IN THE SOIL CHARACTERISTICS AND/OR EXTENT OF SAME DIFFERING FROM THE ABOVE TABULATIONS.

FENCING

STATION	STATION	LOCATION	WIRE FENCE (TYPE C)	WIRE FENCE (TYPE D-2)	* 16'-0" GATES
			LIN. FT.		EACH
99+00	110+00	RT.	1100		
104+50	108+66	LT.		416	
110+00	110+55	RT.	56		
110+55	112+59	RT.		208	
123+92	125+00	LT.		108	1
125+00	126+89	LT.		189	
127+38	130+75	LT.		337	
127+41	130+75	RT.		334	1
TOTALS:			1156	1592	2

* DENOTES ALTERNATE BID ITEM.

GUARDRAIL

STATION	STATION	LOCATION	GUARDRAIL (TYPE A)	THRIE BEAM GUARDRAIL TERMINAL	GUARDRAIL TERMINAL (TYPE 2)	BRIDGE END TERMINAL
			LIN. FT.	EACH		
113+03.06	114+46.81	HWY. 71 LT.	75	1	1	
114+35.07	114+75.07	HWY. 71 RT.				1
116+15.88	118+59.63	HWY. 71 LT.	175	1	1	
116+32.19	117+75.94	HWY. 71 RT.	75	1	1	
TOTALS:			325	3	3	1

CONCRETE DITCH PAVING

STATION	STATION	LOCATION	LENGTH	"W"	CONC. DITCH PAVING (TYPE B)	SOLID SODDING	WATER
			LIN. FT.	FEET	SQ. YD.	SQ. YD.	M. GAL.
122+48.00	123+48.00	HWY. 71 LT.	100.00	6.00	66.67	44.44	0.56
124+00.00	125+00.00	HWY. 71 LT.	100.00	6.00	66.67	44.44	0.56
TOTALS:					133.34	88.88	1.12

BASIS OF ESTIMATE:
WATER.....12.6 GAL. / SQ. YD. OF SOLID SODDING.

SOIL STABILIZATION

STATION	STATION	LOCATION / DESCRIPTION	SOIL STABILIZATION
			TON
ENTIRE	PROJECT	TO BE USED IF AND WHERE	50
		DIRECTED BY THE ENGINEER	
TOTAL:			50

QUANTITY ESTIMATED.
SEE SECTION 104.03 OF THE STD. SPECS.

STATE OF ARKANSAS
REGISTERED PROFESSIONAL ENGINEER
No. 8940
MARK ASHER
12/12/2023

QUANTITIES

T:\Job\D3337300 ArDot T0 I44 Job 040781\T00 CADD Files\T70 Roadway Files\Drawings\00-Quantities.dgn
12/12/2023 11:22:20 AM ...\Drawings\00-Quantities.dgn

DATE REVISED	DATE REVISED	FED.RD. DIST.NO.	STATE	JOB NO.	SHEET NO.	TOTAL SHEETS
		6	ARK.	040781	45	115
		QUANTITIES				

EROSION CONTROL

STATION	STATION	LOCATION	PERMANENT EROSION CONTROL					TEMPORARY EROSION CONTROL									
			SEEDING	LIME	MULCH COVER	WATER	SECOND SEEDING APPLICATION	TEMPORARY SEEDING	MULCH COVER	WATER	WATTLE (20") DITCH CHECKS (E-1)	SAND BAG DITCH CHECKS (E-5)	ROCK DITCH CHECKS (E-6)	SILT FENCE (E-11)	SEDIMENT BASIN (E-14)	OBLITERATION OF SEDIMENT BASIN	*SEDIMENT REMOVAL & DISPOSAL
			ACRE	TON	ACRE	M.GAL.	ACRE	ACRE	ACRE	M.GAL.	LIN. FT.	BAG	CU.YD.	LIN. FT.	CU.YD.	CU.YD.	CU. YD.
ENTIRE	PROJECT	CLEARING AND GRUBBING											63	6499			262
ENTIRE	PROJECT	STAGE 1						0.73	0.73	14.9			18				6
ENTIRE	PROJECT	STAGE 2						1.99	1.99	40.6			39				13
ENTIRE	PROJECT	STAGE 3	3.43	6.86	3.43	349.9	3.43	0.71	0.71	14.5			27				9
*ENTIRE PROJECT TO BE USED IF AND WHERE DIRECTED BY THE ENGINEER.			0.86	1.72	0.86	87.7	0.86	3.43	3.43	70.0	90	110	21	200	100	100	129
TOTALS:			**4.29**	**8.58**	**4.29**	**437.6**	**4.29**	**6.86**	**6.86**	**140.0**	**90**	**110**	**168**	**6699**	**100**	**100**	**419**

BASIS OF ESTIMATE:
LIME .....2 TONS / ACRE OF SEEDING
WATER.....102.0 M.G. / ACRE OF SEEDING
WATER.....20.4 M.G. / ACRE OF TEMPORARY SEEDING
WATER.....12.6 GAL. / SQ. YD. OF SOLID SODDING
WATTLE DITCH CHECKS.....9 LIN. FT. / LOCATION
SAND BAG DITCH CHECKS.....22 BAGS / LOCATION
ROCK DITCH CHECKS.....3 CU.YD./LOCATION
FILTER SOCKS.....23 LIN. FT./ 4' DIA. INLET
27 LIN. FT. / 5' DIA. INLET
30 LIN. FT. / 6' DIA. INLET

NOTE: THE TEMPORARY EROSION CONTROL DEVICES SHOWN ABOVE AND ON THE PLANS SHALL BE INSTALLED IN SUCH A SEQUENCE AS TO DETER EROSION AND SEDIMENTATION ON U.S. WATERWAYS AS EXPLAINED BY THE NATIONAL PCLLUTANT DISCHARGE ELIMINATION SYSTEM PERMIT.

*QUANTITIES ESTIMATED.
SEE SECTION 104.03 OF THE STD. SPECS.

EROSION CONTROL MATTING

STATION	STATION	LOCATION	LENGTH	CLASS 3
			LIN. FT.	SQ. YD.
104+00.00	105+00.00	HWY. 71 RT.	100.00	88.89
104+00.00	110+00.00	HWY. 71 LT.	600.00	533.33
106+38.00	109+00.00	HWY. 71 RT.	262.00	232.89
110+00.00	111+85.00	HWY. 71 RT.	185.00	164.44
113+00.00	114+65.00	HWY. 71 LT.	165.00	146.67
114+15.00	114+65.00	HWY. 71 RT.	50.00	44.44
118+00.00	120+00.00	HWY. 71 LT.	200.00	177.78
122+00.00	122+48.00	HWY. 71 LT.	48.00	42.67
123+50.00	125+00.00	HWY. 71 RT.	150.00	133.33
125+00.00	127+00.00	HWY. 71 LT.	200.00	177.78
128+00.00	130+00.00	HWY. 71 LT.	200.00	177.78
129+00.00	131+00.00	HWY. 71 RT.	200.00	177.78
ENTIRE	PROJECT	TO BE USED IF AND WHERE	50.00	44.44
		DIRECTED BY THE ENGINEER		
TOTAL:				2142.22

NOTE: AVERAGE WIDTH = 8'-0"

APPROACH GUTTERS AND SLABS

STATION	STATION	LOCATION	APPROACH GUTTER				APPROACH SLABS		REINFORCING STEEL-RDWY. (GR. 60)	AGGREGATE BASE CRS. (CLASS 7)
			(TYPE 1 SPECIAL)	(TYPE 2 SPECIAL)	(TYPE 3 SPECIAL)	(TYPE 4 SPECIAL)	(TYPE 1 SPECIAL)	(TYPE 2 SPECIAL)		
			CU.YD.						POUND	TON
114+28.92	114+65.42	RT. OF MAIN LANES		13.67					748	
114+28.92	114+65.42	MAIN LANES					90.65		9891	54.00
114+28.92	114+65.42	LT. OF MAIN LANES	14.75						810	
116+15.00	116+51.50	RT. OF MAIN LANES				14.80			808	
116+15.00	116+51.50	MAIN LANES						72.45	8223	40.75
116+15.00	116+51.50	LT. OF MAIN LANES			13.71				750	
TOTALS:			14.75	13.67	13.71	14.80	90.65	72.45	21230	94.75

NOTE: USE T =17" FOR 8' SHOULDER.

STATE OF ARKANSAS
REGISTERED PROFESSIONAL ENGINEER
No. 8940
MARK ASHER
12/12/2023

QUANTITIES

T:\Job\03337300 ArDot TO 144 Job 040781\700 CADD Files\770 Roadway Files\Drawings\00-Quantities.dgn
12/12/2023 11:22:22 AM ...\Drawings\00-Quantities.dgn

DATE REVISED	DATE REVISED	FED.RD. DIST.NO.	STATE	JOB NO.	SHEET NO.	TOTAL SHEETS
		6	ARK.	040781	46	115
		QUANTITIES				

DUMPED RIPRAP AND FILTER BLANKET

STATION	LOCATION	DUMPED RIPRAP	FILTER BLANKET
		CU. YD.	SQ. YD.
123+97	INLET OF PIPE CULVERT	30	60
123+97	OUTLET OF PIPE CULVERT	45	90
	TO BE USED IF AND WHERE	5	10
	DIRECTED BY THE ENGINEER		
TOTALS:		**80**	**160**

*NOTE: QUANTITY ESTIMATED.
SEE SECTION 104.03 OF THE STANDARD SPECIFICATIONS

NOTE: FILTER BLANKET SHALL BE GEOTEXTILE FABRIC (TYPE 5).

4" PIPE UNDERDRAIN

STATION	STATION	LOCATIONS	4" PIPE UNDERDRAINS	UNDERDRAIN OUTLET PROTECTORS
			LIN. FT.	EACH
103+00	107+00	HWY. 71 LT.	400	3
103+00	107+00	HWY. 71 RT.	400	3
119+00	126+00	HWY. 71 LT.	700	4
119+00	126+00	HWY. 71 RT.	700	4
* ENTIRE PROJECT TO BE USED IF AND			250	2
WHERE DIRECTED BY THE ENGINEER				
TOTALS:			**2450**	**16**

* NOTE: QUANTITY ESTIMATED.
SEE SECTION 104.03 OF THE STD. SPECS.

SELECTED PIPE BEDDING

LOCATION	SELECTED PIPE BEDDING
	CU.YD.
ENTIRE PROJECT TO BE USED IF	
AND WHERE DIRECTED BY THE	20
ENGINEER	
TOTAL:	**20**

NOTE: QUANTITY ESTIMATED.
SEE SECTION 104.03 OF THE STD. SPECS.

CONCRETE ISLAND

STATION	LOCATION	CURB FACE TYPE	CONCRETE ISLAND
			SQ.YD.
113+20	INTERSECTION WITH HWY. 252	B	61
TOTAL:			**61**

MAILBOXES

LOCATION	MAILBOXES	MAILBOX SUPPORTS (SINGLE)
	EACH	
ENTIRE PROJECT	1	1
TOTALS:	**1**	**1**

CULVERT CLEAN OUT

STATION	LOCATION	EACH
106+38	HWY. 71	1
TOTAL:		**1**

STRUCTURES

STATION	DESCRIPTION	REINFORCED CONCRETE PIPE (CLASS IV)	FLARED END SECTIONS FOR R.C. PIPE CULVERTS	TEMPORARY CULVERTS		SPAN	HEIGHT	LENGTH	CLASS S CONCRETE-ROADWAY	REINF. STEEL-ROADWAY (GRADE 60)	UNCL.EXC. FOR STR.-ROADWAY	SOLID SODDING	WATER	STD. DWG. NOS.
		48"	48"	48"	72"									
		LIN. FT.	EACH	LIN. FT.		LIN. FT.			CU.YD.	POUND	CU.YD.	SQ.YD.	M.GAL.	
106+26	CONSTRUCT PIPE CULVERT	88	2									58	0.73	FES-1, FES-2, PCC-1
106+26	TEMPORARY PIPE CULVERT			14										PCC-1, PCM-1, PCP-1, PCP-2, PCP-3
106+38	TEMPORARY PIPE CULVERT			14										PCC-1, PCM-1, PCP-1, PCP-2, PCP-3
106+38	EXTEND BOX CULVERT 34' RT.					4	3	34	14.55	1758	14	6	0.08	RCB-1, RCB-2, RCB-3, R-100X-0, W-X003-1
123+70	TEMPORARY PIPE CULVERT				114									PCC-1, PCM-1, PCP-1, PCP-2, PCP-3
SUBTOTALS:		**88**	**2**	**28**	**114**				**14.55**	**1758**	**14**	**64**	**0.81**	
STRUCTURES OVER 20' - 0" SPAN														
123+97	CONSTRUCT QUAD. BOX CULVERT					9	6	95	344.69	42316	156	38	0.48	SPECIAL DETAILS, RCB-1, RCB-2
SUBTOTALS:									**344.69**	**42316**	**156**	**38**	**0.48**	
TOTALS:		**88**	**2**	**28**	**114**				**359.24**	**44074**	**170**	**102**	**1.29**	

BASIS OF ESTIMATE:
WATER.....12.6 GAL. / SQ. YD. OF SOLID SODDING

NOTE: FOR R.C. PIPE CULVERT INSTALLATIONS USE TYPE 3 BEDDING UNLESS OTHERWISE SPECIFIED.

NOTE: FOR C.M. PIPE CULVERT INSTALLATIONS USE TYPE 2 BEDDING UNLESS OTHERWISE SPECIFIED.

STATE OF ARKANSAS
REGISTERED PROFESSIONAL ENGINEER
No. 8940
MARK ASHER

12/12/2023

T:\Job\040781\700 CADD Files\770 Roadway Files\Drawings\00-Quantities.dgn ...\Drawings\00-Quantities.dgn
12/12/2023 11:22:24 AM

DRIVEWAYS & TURNOUTS

STATION	SIDE	LOCATION	WIDTH	ACHM SURFACE COURSE (1/2") 220 LBS. PER SQ. YD. (PG 64-22)		AGGREGATE BASE COURSE (CLASS 7)	SIDE DRAINS		STANDARD DRAWINGS
							18"	24"	
			FEET	SQ. YD.	TON	TON	LIN. FT.		
99+66	LT.	HWY. 71	16	65.62	7.22	26.79			DR-2
99+95	LT.	HWY. 71	16	65.62	7.22	26.79			DR-2
103+45	LT.	HWY. 71	16	76.29	8.39	31.15			DR-2
112+48	LT.	HWY. 71	16	110.06	12.11	44.94	30		DR-2, PCC-1, PCM-1, PCP-1, PCP-2, PCP-3
121+27	RT.	HWY. 71	20	110.07	12.11	44.95	45		DR-2, PCC-1, PCM-1, PCP-1, PCP-2, PCP-3
127+11	LT.	HWY. 71 (SCHOOL HOUSE RD.)	24	171.73	18.89	70.12		46	DR-2, PCC-1, PCM-1, PCP-1, PCP-2, PCP-3
129+70	RT.	HWY. 71	16	83.40	9.17	34.06	30		DR-2, PCC-1, PCM-1, PCP-1, PCP-2, PCP-3
132+16	LT.	HWY. 71	24	128.73	14.16	52.56			DR-2
132+50	LT.	HWY. 71	16	90.51	9.96	36.96			DR-2
11+50	RT.	HWY. 252	24	134.07	14.75	54.75			DR-2
* ENTIRE PROJECT TEMPORARY DRIVES						100.00			
TOTALS:				**1036.10**	**113.98**	**523.07**	**105**	**46**	

BASIS OF ESTIMATE:
ACHM SURFACE COURSE (1/2").....93.9% MIN. AGGR.....6.1% ASPHALT BINDER
MAXIMUM NUMBER OF GYRATIONS = 115 FOR PG 64-22

* QUANTITY ESTIMATED
SEE SECTION 104.03 OF THE STD. SPECS.
TO BE USED IF AND WHERE DIRECTED BY THE ENGINEER.

NOTE: FOR R.C. PIPE CULVERT INSTALLATIONS USE TYPE 3 BEDDING UNLESS OTHERWISE SPECIFIED.
NOTE: FOR C.M. PIPE CULVERT INSTALLATIONS USE TYPE 2 BEDDING UNLESS OTHERWISE SPECIFIED.

THE CONTRACTOR, WITH THE APPROVAL OF THE ENGINEER, WILL BE ALLOWED TO SUBSTITUTE A HIGHER PERFORMANCE GRADE ASPHALT SURFACE COURSE FOR DRIVEWAYS AND MINOR SIDE STREET CONSTRUCTION AT NO ADDITIONAL COST TO THE DEPARTMENT.

CENTERLINE RUMBLE STRIPES IN ASPHALT ROADWAYS

STATION	STATION	LOCATION	* CENTERLINE RUMBLE STRIPES IN ASPHALT ROADWAYS
			LIN.FT.
99+50	114+29	HWY. 71	1429
116+52	132+00	HWY. 71	1548
TOTAL:			**2977**

* QUANTITY ESTIMATED.
SEE SECTION 104.03 OF THE STD. SPECS.
TO BE USED IF AND WHERE DIRECTED BY THE ENGINEER.

RUMBLE STRIPS IN ASPHALT SHOULDERS

STATION	STATION	LOCATION	* RUMBLE STRIPS IN ASPHALT SHOULDERS
			LIN.FT.
99+50	111+85	HWY. 71 RT.	1235
99+50	114+29	HWY. 71 LT.	1215
114+14	114+29	HWY. 71 RT.	15
116+52	132+00	HWY. 71 LT.	1314
116+52	132+00	HWY. 71 RT.	1412
TOTAL:			**5191**

* QUANTITY ESTIMATED.
SEE SECTION 104.03 OF THE STD. SPECS.
TO BE USED IF AND WHERE DIRECTED BY THE ENGINEER.

BENCH MARKS

STATION	LOCATION	BENCH MARKS
		EACH
106+38	HEADWALL OF BOX CULVERT	1
114+40	END OF BRIDGE	1
123+97	HEADWALL OF BOX CULVERT	1
TOTAL:		**3**

NOTE: SHOWN FOR INFORMATION ONLY. BENCH MARKS SHALL BE FURNISHED AND PLACED BY STATE FORCES.

ASPHALT CONCRETE PATCHING FOR MAINTENANCE OF TRAFFIC

LOCATION	TON	TACK COAT
		GALLON
ENTIRE PROJECT - TO BE USED IF AND WHERE	15	30
DIRECTED BY THE ENGINEER		
TOTALS:	**15**	**30**

BASIS OF ESTIMATE:
ASPHALT CONCRETE PATCHING FOR MAINTENANCE OF TRAFFIC....25 TON/MILE
TACK COAT FOR MAINTENANCE OF TRAFFIC.....50 GAL./MILE

PAVEMENT REPAIR OVER CULVERTS (CONCRETE)

STATION	LOCATION	WIDTH	LENGTH	CU.YD.
		FEET		
106+26	HWY. 71	10.83	24	9.6
TOTAL:				**9.6**

AVG. DEPTH = 12"

COLD MILLING ASPHALT PAVEMENT

STATION	STATION	LOCATION	AVG. WIDTH	COLD MILLING ASPHALT PAVEMENT
			FEET	SQ. YD.
98+50.00	99+50.00	HWY. 71	24.00	266.67
132+00.00	133+00.00	HWY. 71	24.00	266.67
11+50.00	12+50.00	HWY. 252	24.00	266.67
TOTAL:				**800.01**

NOTE: COORDINATE COLD MILLING STOCKPILE LOCATIONS WITH DISTRICT ENGINEER.
STOCKPILE LOCATIONS SHALL BE NO FURTHER THAN FIVE MILES FROM EACH SITE.

ACHM PATCHING OF EXISTING ROADWAY

LOCATION / DESCRIPTION	TON
ENTIRE PROJECT - TO BE USED IF AND WHERE DIRECTED BY THE ENGINEER	25
TOTAL:	**25**

NOTE: QUANTITY ESTIMATED.
SEE SECTION 104.03 OF THE STD. SPECS.

STATE OF ARKANSAS
REGISTERED PROFESSIONAL ENGINEER
No. 8940
MARK ASHER
12/12/2023

T:\Job\03337300 ArDot TO I44 Job 040781\700 CADD Files\700 Roadway Files\Drawings\00-Quantities.dgn
12/12/2023 11:22:26 AM ...\Drawings\00-Quantities.dgn

DATE REVISED	DATE REVISED	FED.RD. DIST.NO.	STATE	JOB NO.	SHEET NO.	TOTAL SHEETS
		6	ARK.	040781	48	115
		QUANTITIES				

BASE AND SURFACING

STATION	STATION	LOCATION	LENGTH	AGGREGATE BASE COURSE (CLASS 7)		TACK COAT							ACHM BINDER COURSE (1")				ACHM SURFACE COURSE (1/2")								
						(0.05 GAL. PER SQ. YD.)			(0.17 GAL. PER SQ. YD.)			TOTAL GALLONS	AVG. WID.	SQ.YD.	POUND / SQ.YD.	PG 70-22	AVG. WID.	SQ.YD.	POUND / SQ.YD.	PG 70-22	AVG. WID.	SQ.YD.	POUND / SQ.YD.	PG 70-22	TOTAL PG 70-22
			FEET	TON / STATION	TON	TOTAL WID. FEET	SQ.YD.	GALLON	TOTAL WID. FEET	SQ.YD.	GALLON		FEET			TON	FEET			TON	FEET			TON	TON
MAIN LANES																									
98+50.00	99+50.00	TRANSITION	100.00	188.50	188.50				28.00	311.11	52.89	52.89									36.00	400.00	220.00	44.00	44.00
99+50.00	102+46.54	NOTCH & WIDEN WITH FULL DEPTH RT. SHLD.	296.54	202.25	599.75	13.41	441.84	22.09				22.09	4.58	150.91	660.00	49.80	4.25	140.03	220.00	15.40	36.00	1186.16	220.00	130.48	145.88
102+46.54	105+00.00	VARIABLE NOTCH & WIDEN WITH FULL DEPTH RT. SHLD.	253.46	VAR.	608.79	VAR.	698.86	34.94				34.94	VAR.	236.05	660.00	77.90	VAR.	226.76	220.00	24.94	36.00	1013.84	220.00	111.52	136.46
105+00.00	108+25.00	2 LANES FULL DEPTH WITH FULL DEPTH RT. SHLD.	325.00	311.25	1011.56	85.41	3084.25	154.21				154.21	28.58	1032.06	660.00	340.58	28.25	1020.14	220.00	112.22	36.00	1300.00	220.00	143.00	255.22
108+25.00	111+85.00	TAPER TO 3 LANES FULL DEPTH WITH FULL DEPTH RT. SHLD.	360.00	338.38	1218.17	103.41	4136.40	206.82				206.82	34.58	1383.20	660.00	456.46	34.25	1370.00	220.00	150.70	42.00	1680.00	220.00	184.80	335.50
111+85.00	114+15.00	3 LANES FULL DEPTH WITH FULL DEPTH RT. SHLD.	230.00	365.50	840.65	121.41	3102.70	155.14				155.14	40.58	1037.04	660.00	342.22	40.25	1028.61	220.00	113.15	48.00	1226.67	220.00	134.93	248.08
114+15.00	114+28.97	TAPER TO LT. TURN LANE WIDTH OF 11.53' AT APPROACH SLAB	13.97	453.93	63.41	120.72	187.38	9.37				9.37	40.35	62.63	660.00	20.67	40.02	62.12	220.00	6.83	47.77	74.15	220.00	8.16	14.99
116+51.50	117+75.00	LT. TURN LANE WDITH OF 4.12' AT APPROACH SLAB TAPER TO 2 LANES	123.50	412.74	509.73	91.59	1256.82	62.84				62.84	30.64	420.45	660.00	138.75	30.31	415.92	220.00	45.75	38.06	522.27	220.00	57.45	103.20
117+75.00	123+00.00	2 LANES FULL DEPTH WITH FULL DEPTH RT. SHLD.	525.00	311.25	1634.06	85.41	4982.25	249.11				249.11	28.58	1667.17	660.00	550.17	28.25	1647.92	220.00	181.27	36.00	2100.00	220.00	231.00	412.27
123+00.00	130+23.26	VARIABLE NOTCH & WIDEN WITH FULL DEPTH RT. SHLD.	723.26	VAR.	1679.46	VAR.	2595.15	129.76				129.76	VAR.	873.89	660.00	288.38	VAR.	847.37	220.00	93.21	36.00	2893.04	220.00	318.23	411.44
130+23.26	132+00.00	NOTCH & WIDEN WITH FULL DEPTH RT. SHLD.	176.74	202.25	357.46	13.41	263.34	13.17				13.17	4.58	89.94	660.00	29.68	4.25	83.46	220.00	9.18	36.00	706.96	220.00	77.77	86.95
132+00.00	133+00.00	TRANSITION	100.00	188.50	188.50				28.00	311.11	52.89	52.89									36.00	400.00	220.00	44.00	44.00
ADDITIONAL FOR LEVELING & GRADE RAISE																									
99+50.00	102+46.54	MAIN LANES-NOTCH & WIDENING	296.54			6.00	197.69	9.88	24.00	790.77	134.43	144.31	6.00	197.69	VAR.	27.85	24.00	790.77	220.00	86.98					86.98
102+46.54	105+00.00	MAIN LANES-VARIABLE NOTCH & WIDENING	253.46			24.00	675.89	33.79	VAR.	449.13	76.35	110.14	24.00	675.89	VAR.	277.47	VAR.	631.20	220.00	69.43					69.43
123+00.00	130+23.26	MAIN LANES-VARIABLE NOTCH & WIDENING	723.26			24.00	1928.69	96.43	VAR.	1081.32	183.82	280.25	24.00	1928.69	VAR.	189.93	VAR.	1674.89	220.00	184.24					184.24
130+23.26	132+00.00	MAIN LANES-NOTCH & WIDENING	176.74						24.00	471.31	80.12	80.12					24.00	471.31	220.00	51.84					51.84
ADDITIONAL FOR SUPERELEVATION																									
100+67.78	103+06.03	SUPERELEVATION TRANSITION - LT. & RT. SHOULDERS	238.25	55.13	131.35																				
103+06.03	104+84.79	MAX 6.8% SUPERELEVATION - LT. & RT. SHOULDERS	178.76	110.25	197.08																				
104+84.79	107+23.04	SUPERELEVATION TRANSITION - LT. & RT. SHOULDERS	238.25	55.13	131.35																				
107+23.04	110+83.04	SUPERELEVATION TRANSITION - RT. SHOULDER	360.00	18.38	66.17																				
110+83.04	114+65.47	MAX R.C. SUPERELEVATION - RT. SHOULDER	382.43	36.75	140.54																				
116+15.00	119+14.59	MAX R.C. SUPERELEVATION - RT. SHOULDER	299.59	36.75	110.10																				
119+14.59	122+74.59	SUPERELEVATION TRANSITION - RT. SHOULDER	360.00	18.38	66.17																				
122+74.59	125+74.59	SUPERELEVATION TRANSITION - LT. SHOULDER	300.00	18.38	55.14																				
125+74.59	129+00.00	MAX R.C. SUPERELEVATION - LT. SHOULDER	325.41	36.75	119.59																				
129+00.00	132+00.00	SUPERELEVATION TRANSITION - LT. SHOULDER	300.00	18.38	55.14																				
ADDITIONAL FOR GUARDRAIL WIDENING																									
112+48.11	112+93.11	TAPER ON LT.	45.00	18.13	8.16																3.75	18.75	220.00	2.06	2.06
112+93.11	113+03.11	10' BEYOND END OF GUARDRAIL ON LT.	10.00	36.25	3.63																7.50	8.33	220.00	0.92	0.92
113+03.11	114+03.11	50:1 FLARE OF GUARDRAIL ON LT.	100.00	30.00	30.00																6.50	72.22	220.00	7.94	7.94
114+03.11	114+46.86	STRAIGHT SECTION MATCHING BRIDGE PARAPET ON LT.	43.75	23.75	10.39																5.50	26.74	220.00	2.94	2.94
113+92.07	114+25.07	TAPER ON RT.	33.00	43.38	14.32																3.75	13.75	220.00	1.51	1.51
114+25.07	114+35.07	10' BEYOND END OF BRIDGE END TERMINAL ON RT.	10.00	86.75	8.68																7.50	8.33	220.00	0.92	0.92
114+35.07	114+75.07	BRIDGE END TERMINAL ON RT.	40.00	86.75	34.70																7.50	33.33	220.00	3.67	3.67
116+15.88	116+59.63	STRAIGHT SECTION MATCHING BRIDGE PARAPET ON LT.	43.75	23.75	10.39																5.50	26.74	220.00	2.94	2.94
116+59.63	118+59.63	FLARE OF GUARDRAIL ON LT.	200.00	30.00	60.00																6.50	144.44	220.00	15.89	15.89
118+59.63	118+69.63	10' BEYOND END OF GUARDRAIL ON LT.	10.00	36.25	3.63																7.50	8.33	220.00	0.92	0.92
118+69.63	119+14.63	TAPER ON LT.	45.00	18.13	8.16																3.75	18.75	220.00	2.06	2.06
116+32.19	116+75.94	STRAIGHT SECTION MATCHING BRIDGE PARAPET ON RT.	43.75	53.25	23.30																5.50	26.74	220.00	2.94	2.94
116+75.94	117+75.94	50:1 FLARE OF GUARDRAIL ON RT.	100.00	70.00	70.00																6.50	72.22	220.00	7.94	7.94
117+75.94	117+85.94	10' BEYOND END OF GUARDRAIL ON RT.	10.00	86.75	8.68																7.50	8.33	220.00	0.92	0.92
117+85.94	118+30.94	TAPER ON RT.	45.00	43.38	19.52																3.75	18.75	220.00	2.06	2.06
ADDITIONAL FOR MAINTENANCE OF TRAFFIC																									
99+50.00	114+65.47	SHLD. RECONSTRUCTION FOR MOT - EXIST. LT. SHOULDER	1515.47	76.50	1159.33	12.38	2084.61	104.23				104.23	6.25	1052.41	440.00	231.53	6.13	1032.20	220.00	113.54	6.00	1010.31	220.00	111.13	224.67
99+87.00	109+75.00	STAGE 1 TEMP. WIDENING ON LT.	988.00	VAR.	283.35	VAR.	539.72	26.99				26.99	VAR.	539.72	440.00	118.74					VAR.	539.72	220.00	59.37	59.37
113+06.00	114+48.00	STAGE 1 TEMP. WIDENING ON LT.	142.00	VAR.	8.04	VAR.	15.32	0.77				0.77	VAR.	15.32	440.00	3.37					VAR.	15.32	220.00	1.69	1.69
115+58.00	133+00.00	STAGE 1 TEMP. WIDENING ON LT.	1742.00	VAR.	129.12	VAR.	245.95	12.30				12.30	VAR.	245.95	440.00	54.11					VAR.	245.95	220.00	27.05	27.05
116+15.00	133+00.00	SHLD. RECONSTRUCTION FOR MOT - EXIST. LT. SHOULDER	1685.00	76.50	1289.03	12.38	2317.81	115.89				115.89	6.25	1170.14	440.00	257.43	6.13	1147.67	220.00	126.24	6.00	1123.33	220.00	123.57	249.81
121+99.00	126+20.00	STAGE 2 TEMP. WIDENING ON RT.	421.00	VAR.	217.84	VAR.	414.94	20.75				20.75	VAR.	414.94	440.00	91.29					VAR.	414.94	220.00	45.64	45.64
HWY. 252																									
10+13.00	11+05.00	FULL DEPTH RT. SHOULDER	92.00	86.25	79.35	18.63	190.44	9.52				9.52	6.25	63.89	660.00	21.08	6.13	62.66	220.00	6.89	6.00	61.33	220.00	6.75	13.64
10+20.00	11+18.00	FULL DEPTH WIDENING IN RADII	98.00	VAR.	114.60	VAR.	841.98	42.10				42.10	VAR.	280.66	660.00	92.62	VAR.	280.66	220.00	30.87	VAR.	221.60	220.00	24.38	55.25
10+25.00	12+50.00	OVERLAY	225.00						VAR.	723.39	122.98	122.98									VAR.	723.39	220.00	79.57	79.57
10+30.00	11+16.00	FULL DEPTH PATCH FOR EXISTING SPLITTER ISLAND	86.00	VAR.	21.86	VAR.	160.59	8.03				8.03	VAR.	53.53	660.00	17.66	VAR.	53.53	220.00	5.89	VAR.	53.53	220.00	5.89	11.78
10+57.00	11+50.00	FULL DEPTH LT. SHOULDER	93.00	86.25	80.21	18.63	192.51	9.63				9.63	6.25	64.58	660.00	21.31	6.13	63.34	220.00	6.97	6.00	62.00	220.00	6.82	13.79
11+05.00	12+50.00	STANDARD RT. SHOULDER	145.00	58.63	85.01																3.00	48.33	220.00	5.32	5.32
11+50.00	12+50.00	STANDARD LT. SHOULDER	100.00	58.63	58.63																3.00	33.33	220.00	3.67	3.67
TOTALS:					**13812.60**		**30555.13**	**1527.76**		**4138.14**	**703.48**	**2231.24**		**13656.75**		**3699.00**		**13050.56**		**1435.54**		**18561.92**		**2041.82**	**3477.36**

BASIS OF ESTIMATE:
ACHM SURFACE COURSE (1/2")....................93.9% MIN. AGGR.................6.1% ASPHALT BINDER
ACHM BINDER COURSE (1")...........................95.8% MIN. AGGR.................4.2% ASPHALT BINDER
MAXIMUM NUMBER OF GYRATIONS = 160 FOR PG 70-22
TACK COAT QUANTITIES WERE CALCULATED USING THE EMULSIFIED ASPHALT RATES. REFER TO SS-400-1 FOR THE RESIDUAL ASPHALT APPLICATION RATES.

STATE OF ARKANSAS REGISTERED PROFESSIONAL ENGINEER No. 8940 MARK ASHER

12/12/2023

QUANTITIES

T:\Job\D3337300 ArDot TO 144 Job 040781\700 CADD Files\770 Roadway Files\Drawings\10-Quantities.dgn

...\Drawings\10-Quantities.dgn 11:22:29 AM 12/12/2023

DATE REVISED	DATE FILMED	DATE REVISED	DATE FILMED

FED.RD. DIST.NO.	STATE	FED.AID PROJ.NO.	SHEET NO.	TOTAL SHEETS
6	ARK.			
JOB NO.		040781	49	115
(1) 07501		QUANTITIES		61940

SCHEDULE OF BRIDGE QUANTITIES - JOB NO. 040781

BRIDGE NUMBER	NAME PLATE TITLE	UNIT OF STRUCTURE	ITEM NUMBER	205	801	SP, SS & 802	SP, SS & 802	SS & 802	SP & 803	SS & 804	SS & 804	SS & 805	SS & 805	812	SS & 816	SS & 816
			ITEM	REMOVAL OF EXISTING BRIDGE STRUCTURE (SITE NO. _)	UNCLASSIFIED EXCAVATION FOR STRUCTURES-BRIDGE	CLASS S CONCRETE-BRIDGE	CLASS S(AE) CONCRETE-BRIDGE	PRESTRESSED CONCRETE GIRDERS (TYPE II)	CLASS 2 PROTECTIVE SURFACE TREATMENT	REINFORCING STEEL-BRIDGE (GRADE 60)	EPOXY COATED REINFORCING STEEL (GRADE 60)	STEEL PILING (HP 12X53)	PREBORING	BRIDGE NAME PLATE (TYPE D)	FILTER BLANKET	DUMPED RIPRAP
			UNIT	LUMP SUM	CU. YD.	CU. YD.	CU. YD.	LIN. FT.	SQ. YD.	POUND	POUND	LIN. FT.	LIN. FT.	EACH	SQ. YD.	CU. YD.
07501	HIGHWAY 71 OVER PRAIRIE CREEK	END BENT NO. 1			25.36					2,212	455	150	150		420	228
		INTERMEDIATE BENT NO. 2			89.57					12,979	300					
		INTERMEDIATE BENT NO. 3			88.61					12,824	294					
		END BENT NO. 4			22.46					2,163	421	108	108		213	122
		148'-4" INTEGRAL PRESTRESSED CONCRETE GIRDER UNIT TYPE II				341.70	880.3	8,487.0			70,288			1		
		SITE NO. 1 (EXISTING BR. NO. 02240)		1												
TOTALS FOR JOB NO. 040781					(1) 157	226.00	341.70	880.3	8,487.0	30,178	71,758	258	258	1	633	350

(1) Includes approximately 157 cubic yards of rock excavation.

STATE OF ARKANSAS REGISTERED PROFESSIONAL ENGINEER No. 8940 MARK ASHER

12/14/2023

BRIDGE ENGINEER

PRINT DATE: $$DATE$$

SCHEDULE OF BRIDGE QUANTITIES
HIGHWAY 71 OVER PRAIRIE CREEK
ROUTE 71 SECTION 13
ARKANSAS STATE HIGHWAY COMMISSION
LITTLE ROCK, ARKANSAS

DRAWN BY: JPC DATE: 06/2020 FILENAME: b040781_q1.dgn
CHECKED BY: JRS DATE: 02/2023
DESIGNED BY: MAA DATE: 06/2020 SCALE: No Scale
BRIDGE NO. 07501 DRAWING NO. 61940

SUMMARY OF QUANTITIES

ITEM NUMBER	ITEM		QUANTITY	UNIT
SP & 201	CLEARING		13	STATION
201	GRUBBING		13	STATION
202	REMOVAL AND DISPOSAL OF CURB		380	LIN. FT.
202	REMOVAL AND DISPOSAL OF FENCE		2776	LIN. FT.
202	REMOVAL AND DISPOSAL OF PIPE CULVERTS		1	EACH
202	REMOVAL AND DISPOSAL OF BOX CULVERTS		1	EACH
202	REMOVAL AND DISPOSAL OF GUARDRAIL		1026	LIN. FT.
202	REMOVAL AND DISPOSAL OF CATTLE GUARD		1	EACH
SP, SS, & 210	UNCLASSIFIED EXCAVATION		13793	CU. YD.
SP & 210	COMPACTED EMBANKMENT		39101	CU. YD.
SP & 210	SOIL STABILIZATION		50	TON
SP, SS, & 303	AGGREGATE BASE COURSE (CLASS 7)		14430	TON
SS & 401	TACK COAT		2261	GAL.
SP, SS, & 406	MINERAL AGGREGATE IN ACHM BINDER COURSE (1")		3544	TON
SP, SS, & 406	ASPHALT BINDER (PG 70-22) IN ACHM BINDER COURSE (1")		155	TON
SP, SS, & 407	MINERAL AGGREGATE IN ACHM SURFACE COURSE (1/2")		3372	TON
SP, SS, & 407	ASPHALT BINDER (PG 64-22) IN ACHM SURFACE COURSE (1/2")		7	TON
SP, SS, & 407	ASPHALT BINDER (PG 70-22) IN ACHM SURFACE COURSE (1/2")		212	TON
SP & 412	COLD MILLING ASPHALT PAVEMENT		800	SQ. YD.
SP, SS, & 414	ASPHALT CONCRETE PATCHING FOR MAINTENANCE OF TRAFFIC		15	TON
SP, SS, & 415	ACHM PATCHING OF EXISTING ROADWAY		25	TON
SP, SS, & 504	APPROACH SLABS		163.10	CU. YD.
SP, SS, & 504	APPROACH GUTTERS		56.93	CU. YD.
601	MOBILIZATION		1.00	LUMP SUM
SP & 602	FURNISHING FIELD OFFICE		1	EACH
SS & 603	MAINTENANCE OF TRAFFIC		1.00	LUMP SUM
603	48" TEMPORARY CULVERT		28	LIN. FT.
603	72" TEMPORARY CULVERT		114	LIN. FT.
SS & 604	SIGNS		404	SQ. FT.
SS & 604	BARRICADES		136	LIN. FT.
SS & 604	TRAFFIC DRUMS		327	EACH
SS & 604	FURNISHING AND INSTALLING PRECAST CONCRETE BARRIER		2700	LIN. FT.
SS & 604	RELOCATING PRECAST CONCRETE BARRIER		1000	LIN. FT.
604	CONSTRUCTION PAVEMENT MARKINGS		25064	LIN. FT.
604	REMOVABLE CONSTRUCTION PAVEMENT MARKINGS		936	LIN. FT.
604	REMOVAL OF CONSTRUCTION PAVEMENT MARKINGS		3000	LIN. FT.
604	REMOVAL OF PERMANENT PAVEMENT MARKINGS		13000	LIN. FT.
SS & 604	VERTICAL PANELS		48	EACH
SP, SS, & 605	CONCRETE DITCH PAVING (TYPE B)		133	SQ. YD.
SS & 606	48" REINFORCED CONCRETE PIPE CULVERTS (CLASS IV)		88	LIN. FT.
SP	CULVERT CLEAN OUT		1	EACH
SP, SS, & 606	18" SIDE DRAIN		105	LIN. FT.
SP, SS, & 606	24" SIDE DRAIN		46	LIN. FT.
SS & 606	48" FLARED END SECTIONS FOR REINFORCED CONCRETE PIPE CULVERTS		2	EACH
SS & 606	SELECTED PIPE BEDDING		20	CU. YD.
SS & 611	4" PIPE UNDERDRAINS		2450	LIN. FT.
SS & 611	UNDERDRAIN OUTLET PROTECTORS		16	EACH
SS & 615	PAVEMENT REPAIR OVER CULVERTS (CONCRETE)		9.6	CU. YD.
SS & 617	GUARDRAIL (TYPE A)		325	LIN. FT.
SS & 617	GUARDRAIL TERMINAL (TYPE 2)		3	EACH
SS & 617	THRIE BEAM GUARDRAIL TERMINAL		3	EACH
SS & 619	WIRE FENCE (TYPE C)		1156	LIN. FT.
SS & 619	WIRE FENCE (TYPE D-2)		1592	LIN. FT.
* SS & 619	16' STEEL GATES	(ALTERNATE NO. 1)	2	EACH
* SS & 619	16' ALUMINUM GATES	(ALTERNATE NO. 2)	2	EACH
620	LIME		9	TON
620	SEEDING		4.29	ACRE
SS & 620	MULCH COVER		11.15	ACRE
620	WATER		580.0	M. GAL.
621	TEMPORARY SEEDING		6.86	ACRE
621	SILT FENCE		6699	LIN. FT.
621	SAND BAG DITCH CHECKS		110	BAG
621	SEDIMENT BASIN		100	CU. YD.
621	OBLITERATION OF SEDIMENT BASIN		100	CU. YD.
621	SEDIMENT REMOVAL AND DISPOSAL		419	CU. YD.
621	ROCK DITCH CHECKS		168	CU. YD.
621	WATTLE (20")		90	LIN. FT.
623	SECOND SEEDING APPLICATION		4.29	ACRE
624	SOLID SODDING		191	SQ. YD.
626	EROSION CONTROL MATTING (CLASS 3)		2142	SQ. YD.
SP, SS, & 632	CONCRETE ISLAND		61	SQ. YD.
635	ROADWAY CONSTRUCTION CONTROL		1.00	LUMP SUM
637	MAILBOXES		1	EACH
637	MAILBOX SUPPORTS (SINGLE)		1	EACH
642	RUMBLE STRIPS IN ASPHALT SHOULDERS		5191	LIN. FT.
SP & 642	CENTERLINE RUMBLE STRIPES IN ASPHALT ROADWAYS		2977	LIN. FT.
718	REFLECTORIZED PAINT PAVEMENT MARKING WHITE (12")		105	LIN. FT.
719	THERMOPLASTIC PAVEMENT MARKING WHITE (6")		7052	LIN. FT.
719	THERMOPLASTIC PAVEMENT MARKING WHITE (12")		320	LIN. FT.
719	THERMOPLASTIC PAVEMENT MARKING YELLOW (6")		8551	LIN. FT.
719	THERMOPLASTIC PAVEMENT MARKING (WORDS)		1	EACH
719	THERMOPLASTIC PAVEMENT MARKING (ARROWS)		1	EACH
721	RAISED PAVEMENT MARKERS (TYPE II)		108	EACH
SS & 731	TEMPORARY IMPACT ATTENUATION BARRIER		10	EACH
SS & 731	TEMPORARY IMPACT ATTENUATION BARRIER (REPAIR)		14	EACH
SS & 731	TEMPORARY IMPACT ATTENUATION BARRIER (RELOCATION)		6	EACH
SS & 734	BRIDGE END TERMINAL		1	EACH
801	UNCLASSIFIED EXCAVATION FOR STRUCTURES-ROADWAY		14	CU. YD.
SP, SS, & 802	CLASS S CONCRETE-ROADWAY		14.55	CU. YD.
SS & 804	REINFORCING STEEL-ROADWAY (GRADE 60)		22988	POUND
SS & 816	FILTER BLANKET		160	SQ. YD.
SS & 816	DUMPED RIPRAP		80	CU. YD.
	STRUCTURES OVER 20' SPAN			
205	REMOVAL OF EXISTING BRIDGE STRUCTURE (SITE NO. 1)		1.00	LUMP SUM
636	BRIDGE CONSTRUCTION CONTROL		1.00	LUMP SUM
801	UNCLASSIFIED EXCAVATION FOR STRUCTURES-BRIDGE		157	CU. YD.
801	UNCLASSIFIED EXCAVATION FOR STRUCTURES-ROADWAY		156	CU. YD.
SP, SS, & 802	CLASS S CONCRETE-ROADWAY		344.69	CU. YD.
SP, SS, & 802	CLASS S CONCRETE-BRIDGE		226.00	CU. YD.
SP, SS, & 802	CLASS S(AE) CONCRETE-BRIDGE		341.70	CU. YD.
SS & 802	PRESTRESSED CONCRETE GIRDERS (TYPE II)		880.3	LIN. FT.
SP & 803	CLASS 2 PROTECTIVE SURFACE TREATMENT		8487.0	SQ. YD.
SS & 804	REINFORCING STEEL-ROADWAY (GRADE 60)		42316	POUND
SS & 804	REINFORCING STEEL-BRIDGE (GRADE 60)		30178	POUND
SS & 804	EPOXY COATED REINFORCING STEEL (GRADE 60)		71758	POUND
SS & 805	STEEL PILING (HP 12X53)		258	LIN. FT.
SS & 805	PREBORING		258	LIN. FT.
812	BRIDGE NAME PLATE (TYPE D)		1	EACH
SS & 816	FILTER BLANKET		633	SQ. YD.
SS & 816	DUMPED RIPRAP		350	CU. YD.

* DENOTES ALTERNATE BID ITEMS.

REVISIONS

DATE	REVISION	SHEET NUMBER
1/5/2024	ADDED SPECIAL CLEARING REQUIREMENTS SP AND REMOVED FLEXIBLE BEGINNING OF WORK SP	3 & 50
1/11/2024	ADDED WORK ALLOWED PRIOR TO ISSUANCE OF WORK ORDER FOR TREE CLEARING SP & REMOVED IMMEDIATE WORK ORDER SP	3 & 50

STATE OF ARKANSAS
REGISTERED PROFESSIONAL ENGINEER
No. 8940
MARK ASHLEY

01/11/2024

SUMMARY OF QUANTITIES AND REVISIONS

DATE REVISED	DATE REVISED	DATE REVISED
01-05-24		
01-11-24		

SUMMARY OF QUANTITIES AND REVISIONS

FED.RD. DIST.NO.	STATE	JOB NO.	SHEET NO.	TOTAL SHEETS
6	ARK.	040781	50	115

DATE REVISED	DATE REVISED	FED.RD. DIST.NO.	STATE	JOB NO.	SHEET NO.	TOTAL SHEETS
		6	ARK.	040781	51	115
		SURVEY CONTROL DETAILS				

ALL BEARINGS ARE GRID
BASED ON GPS
ALL DISTANCES ARE GROUND

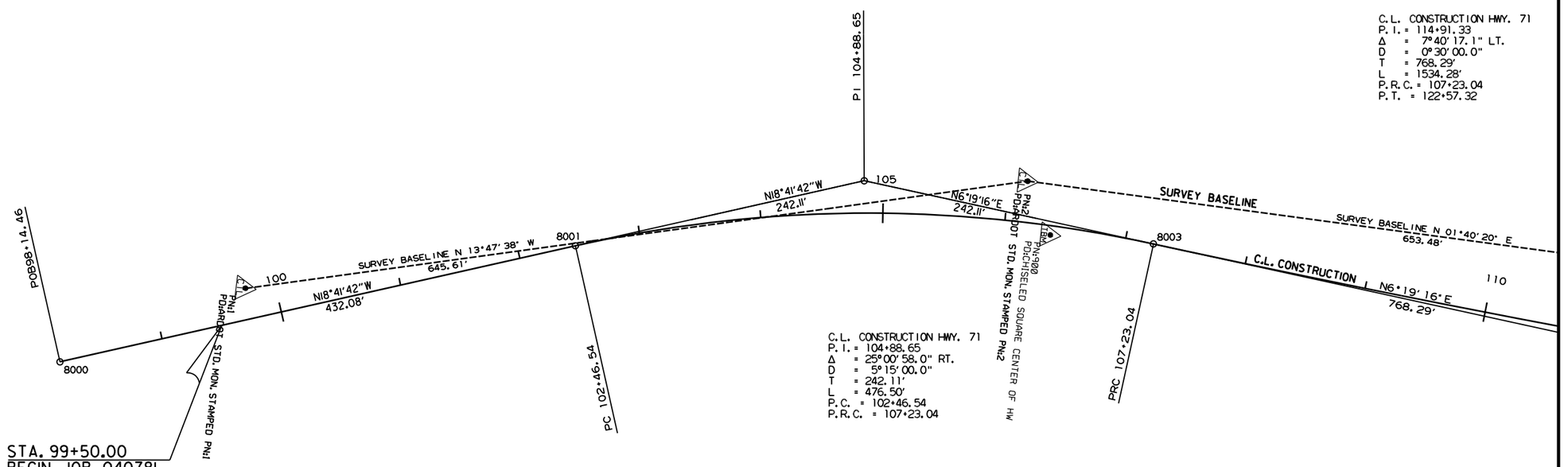

SURVEY CONTROL COORDINATES

Project Name: s040781
Date: 7/31/2019
Coordinate System: ARKANSAS STATE PLANE – NORTH ZONE BASED ON GPS CONTROL, 650032 – 650032A
PROJECTED TO GROUND.
Units: U.S. SURVEY FOOT

Point Name	Northing	Easting	Elev	Feature	Description
1	288855.5769	634370.1336	581.82	CTL	ARDOT STD. MON. STAMPED PN:1
2	289482.5700	634216.2017	582.49	CTL	ARDOT STD. MON. STAMPED PN:2
3	290135.7690	634235.2722	585.76	CTL	ARDOT STD. MON. STAMPED PN:3
4	290799.4575	634302.8674	576.46	CTL	ARDOT STD. MON. STAMPED PN:4
5	291579.1278	634336.0347	581.02	CTL	ARDOT STD. MON. STAMPED PN:5
6	293325.2728	634368.7854	594.14	CTL	ARDOT STD. MON. STAMPED PN:6
100	292410.0051	634324.8721	590.06	GPS	ARDOT GPS #650032
101	294210.5779	634408.9000	597.46	GPS	ARDOT GPS #650032A
900	289505.5630	634258.0560	580.24	TBM	CHISELED SQUARE CENTER OF HW
901	290308.1874	634249.6238	582.36	TBM	CHISELED SQUARE S END OF BR
999	294258.2017	634241.6701	597.64	BM	NGS 1ST ORDER BM A 299

*Note – Rebar and Cap – Standard – 5/8" Rebar with 2" Aluminum Cap stamped
*(standard markings common to all caps), or as indicated
(other markings indicated in the point description of the individual point).
ALL DISTANCES ARE GROUND.
USE CAF = 1.0 FOR STAKEOUT FOR THIS PROJECT.
A PROJECT CAF OF 0.999946425675 HAS BEEN USED TO COMPUTE THE ABOVE GROUND COORDINATES.
THIS CAF IS INTENDED FOR USE WITHIN THE PROJECT LIMITS.
GRID DISTANCE = GROUND DISTANCE X CAF.
GRID COORDINATES ARE STORED UNDER FILE NAME s040781gi.CTL
HORIZONTAL DATUM: NAD 83 (2011)
VERTICAL DATUM: NAVD 88 POSITIONAL ACCURACY THIRD ORDER, UNLESS SPECIFIED OTHERWISE AT A SPECIFIC POINT.

REFERENCE POINTS (1500 SERIES) ARE TO BE USED TO ESTABLISH CONTROL IF THE PRIMARY CONTROL POINTS LISTED ABOVE HAVE BEEN DESTROYED.
REFERENCE POINTS ARE NOT TO BE USED FOR VERTICAL CONTROL

BASIS OF BEARING:
ARKANSAS STATE PLANE GRID BEARINGS – 0301–NORTH ZONE
DETERMINED FROM GPS CONTROL POINTS: 650032 – 650032A
CONVERGENCE ANGLE: 01 19 10.0044 LEFT AT PN:3 LT:35 06 32.2372 LG:094 16 02.9343
GRID AZIMUTH = ASTRONOMICAL AZIMUTH – CONVERGENCE ANGLE.

C.L. CONSTRUCTION HWY. 71

POINT NAME	DESCRIPTION	STATION	NORTHING	EASTING
8000	POB	98+14.46	288710.8987	634445.8964
8001	PC	102+46.54	289120.1826	634307.4016
8003	PRC	107+23.04	289590.1515	634256.4554
8005	PT	122+57.32	291121.8486	634322.9409
8006	PC	122+91.85	291156.3639	634322.1274
8008	PT	130+23.26	291887.6234	634328.2314
8009	POE	133+00.00	292164.1439	634339.3704

C.L. CONSTRUCTION HWY. 252

POINT NAME	DESCRIPTION	STATION	NORTHING	EASTING
8012	POB	10+07.19	290142.7881	634304.1663
8013	POE	15+00.00	290210.2177	634792.3443

C.L. CONSTRUCTION SCHOOL HOUSE RD.

POINT NAME	DESCRIPTION	STATION	NORTHING	EASTING
8014	POB	48+00.00	291586.5038	634119.5204
8015	POE	50+00.69	291575.5726	634319.9165

STATE OF ARKANSAS
REGISTERED PROFESSIONAL ENGINEER
No. 8940
MARK ASHER

12/12/2023

SURVEY CONTROL DETAILS

$FILE$ $DATE$ ...\9-Survey Control Details.dgn 11:23:01 AM

DATE REVISED	DATE REVISED	FED.RD. DIST.NO.	STATE	JOB NO.	SHEET NO.	TOTAL SHEETS
		6	ARK.	040781	52	115
		SURVEY CONTROL DETAILS				

C.L. CONSTRUCTION HWY. 71
P.I. = 114+91.33
Δ = 7°40'17.1" LT.
D = 0°30'00.0"
T = 768.29'
L = 1534.28'
P.R.C. = 107+23.04
P.T. = 122+57.32

N

ALL BEARINGS ARE GRID
BASED ON GPS
ALL DISTANCES ARE GROUND

STA. 112+77.78 C.L. CONSTRUCTION=
STA. 10+07.19 C.L. HWY. 252
Δ = 78°35'18"

N 01°40'20" E
8'

110

PN3
PD:ARDOT STD. MON. STAMPED PN3

8012

PN:301
PD:CHISELED SQUARE S END OF BR

115

SURVEY BASELINE N 05°48'55" E
667.12'

SURVEY BASELINE

C.L. CONSTRUCTION

N6°19'16"E
768.29'

N1°21'01"W
768.29'

PI 114+91.33

PN4
PD:ARDOT STD. MON. STAMPED PN4

120

PT 122+57.32

8005

8006

N1°21'01"W
34.53'

PC 122+91.85

125

SURVEY BASELINE N 02°26'09" E
780.38'

N82°08'09"E
492.81'

C.L. HWY. 252

POE 15+00.00

8013

C.L. CONSTRUCTION HWY. 71
P.I. = 126+57.67
Δ = 3°39'25.4" RT.
D = 0°30'00.0"
T = 365.83'
L = 731.41'
P.C. = 122+91.85
P.T. = 130+23.26

STATE OF ARKANSAS
REGISTERED PROFESSIONAL ENGINEER
No. 8940
MARK ASHER

12/12/2023

SURVEY CONTROL DETAILS

$DATE$ $FILE$ ...\9-Survey Control Details.dgn 11:23:03 AM

DATE REVISED	DATE REVISED	FED.RD. DIST.NO.	STATE	JOB NO.	SHEET NO.	TOTAL SHEETS
		6	ARK.	040781	53	115
		SURVEY CONTROL DETAILS				

ALL BEARINGS ARE GRID
BASED ON GPS
ALL DISTANCES ARE GROUND

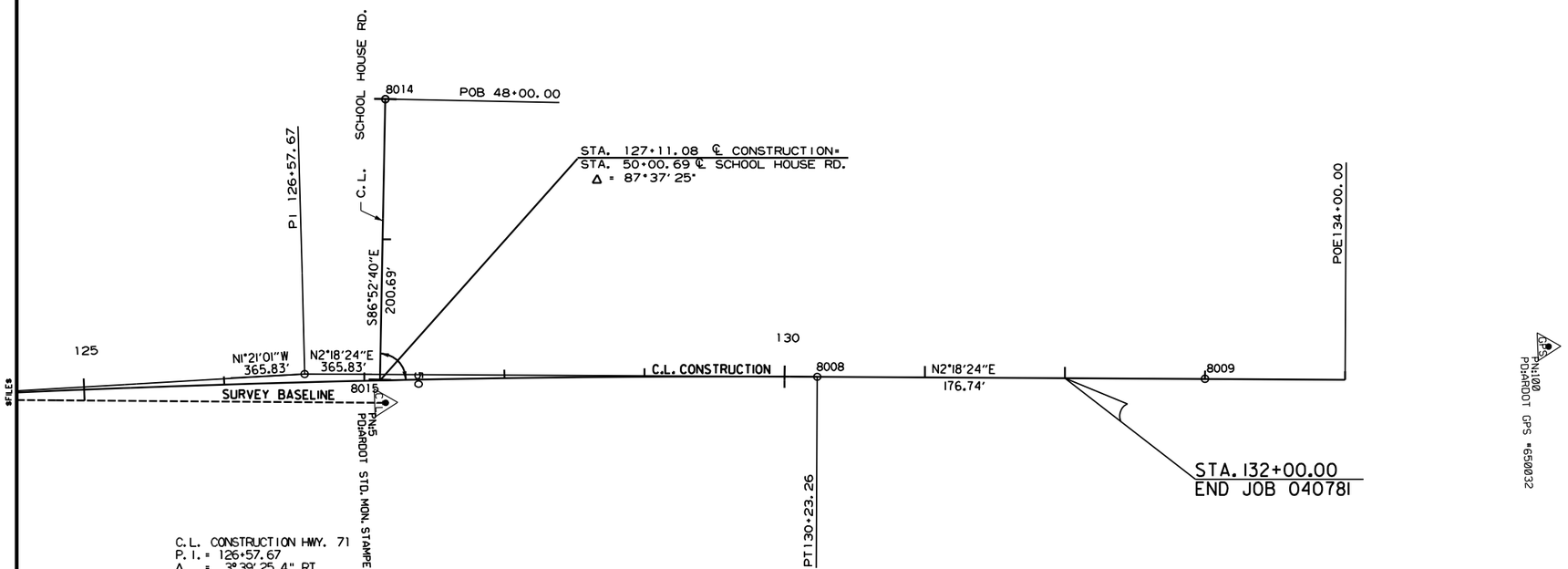

C.L. CONSTRUCTION HWY. 71
P.I. = 126+57.67
Δ = 3°39'25.4" RT.
D = 0°30'00.0"
T = 365.83'
L = 731.41'
P.C. = 122+91.85
P.T. = 130+23.26

STATE OF ARKANSAS
REGISTERED PROFESSIONAL ENGINEER
No. 8940
MARK ASHER

12/12/2023

SURVEY CONTROL DETAILS

$FILE$ ...\9-Survey Control Details.dgn
$DATE$ 12/3/03 AM

DATE REVISED	DATE REVISED	FED.RD. DIST.NO.	STATE	JOB NO.	SHEET NO.	TOTAL SHEETS
		6	ARK.	040781	54	115
		SURVEY CONTROL DETAILS				

SURVEY CONTROL COORDINATES

Project Name: s040781
Date: 7/31/2019
Coordinate System: ARKANSAS STATE PLANE - NORTH ZONE BASED ON GPS CONTROL, 650032 - 650032A
PROJECTED TO GROUND.
Units: U.S. SURVEY FOOT

Point Name	Northing	Easting	Elev	Feature	Description
1	288855.5769	634370.1336	581.82	CTL	ARDOT STD. MON. STAMPED PN:1
2	289482.5700	634216.2017	582.49	CTL	ARDOT STD. MON. STAMPED PN:2
3	290135.7690	634235.2722	585.76	CTL	ARDOT STD. MON. STAMPED PN:3
4	290799.4575	634302.8674	576.46	CTL	ARDOT STD. MON. STAMPED PN:4
5	291579.1278	634336.0347	581.02	CTL	ARDOT STD. MON. STAMPED PN:5
6	293325.2728	634368.7854	594.14	CTL	ARDOT STD. MON. STAMPED PN:6
100	292410.0051	634324.8721	590.06	GPS	ARDOT GPS #650032
101	294210.5779	634408.9000	597.46	GPS	ARDOT GPS #650032A
900	289505.5630	634258.0560	580.24	TBM	CHISELED SQUARE CENTER OF HW
901	290308.1874	634249.6238	582.36	TBM	CHISELED SQUARE S END OF BR
999	294258.2017	634241.6701	597.64	BM	NGS 1ST ORDER BM A 299

*Note - Rebar and Cap - Standard - 5/8" Rebar with 2" Aluminum Cap stamped
*(standard markings common to all caps), or as indicated
(other markings indicated in the point description of the individual point).
ALL DISTANCES ARE GROUND.
USE CAF = 1.0 FOR STAKEOUT FOR THIS PROJECT.
A PROJECT CAF OF 0.999946425675 HAS BEEN USED TO COMPUTE THE ABOVE GROUND COORDINATES.
THIS CAF IS INTENDED FOR USE WITHIN THE PROJECT LIMITS.
GRID DISTANCE = GROUND DISTANCE X CAF.
GRID COORDINATES ARE STORED UNDER FILE NAME s040781gi.CTL
HORIZONTAL DATUM: NAD 83 (2011)
VERTICAL DATUM: NAVD 88 POSITIONAL ACCURACY THIRD ORDER, UNLESS SPECIFIED OTHERWISE
AT A SPECIFIC POINT.

REFERENCE POINTS (1500 SERIES) ARE TO BE USED TO ESTABLISH CONTROL
IF THE PRIMARY CONTROL POINTS LISTED ABOVE HAVE BEEN DESTROYED.
REFERENCE POINTS ARE NOT TO BE USED FOR VERTICAL CONTROL

BASIS OF BEARING:
ARKANSAS STATE PLANE GRID BEARINGS - 0301-NORTH ZONE
DETERMINED FROM GPS CONTROL POINTS: 650032 - 650032A
CONVERGENCE ANGLE: 01 19 10.0044 LEFT AT PN:3 LT:35 06 32.2372 LG:094 16 02.9343
GRID AZIMUTH = ASTRONOMICAL AZIMUTH - CONVERGENCE ANGLE.

ALL BEARINGS ARE GRID
BASED ON GPS
ALL DISTANCES ARE GROUND

① EXISTING C.L.
PI = 104+99.27
Δ = 21°00'06" RT.
D = 5°00'00"
T = 212.40'
L = 420.03'
PC = 102+86.87
PT = 107+06.87

② STAGE 2 MOT C.L.
PI = 101+41.16
Δ = 5°58'40" LT.
D = 7°00'00"
T = 42.74'
L = 85.40'
PC = 100+98.43
PRC = 101+83.82

③ STAGE 2 MOT C.L.
PI = 104+26.98
Δ = 28°34'20" RT.
D = 6°00'00"
T = 243.16'
L = 476.20'
PRC = 101+83.82
PT = 106+60.03

④ STAGE 3 MOT C.L.
PI = 104+82.64
Δ = 25°40'33" RT.
D = 5°31'55"
T = 236.04'
L = 464.15'
PC = 102+46.60
PRC = 107+10.75

⑤ STAGE 3 MOT C.L.
PI = 107+66.79
Δ = 0°33'37" LT.
D = 0°29'59"
T = 56.05'
L = 112.10'
PRC = 107+10.75
PT = 108+22.84

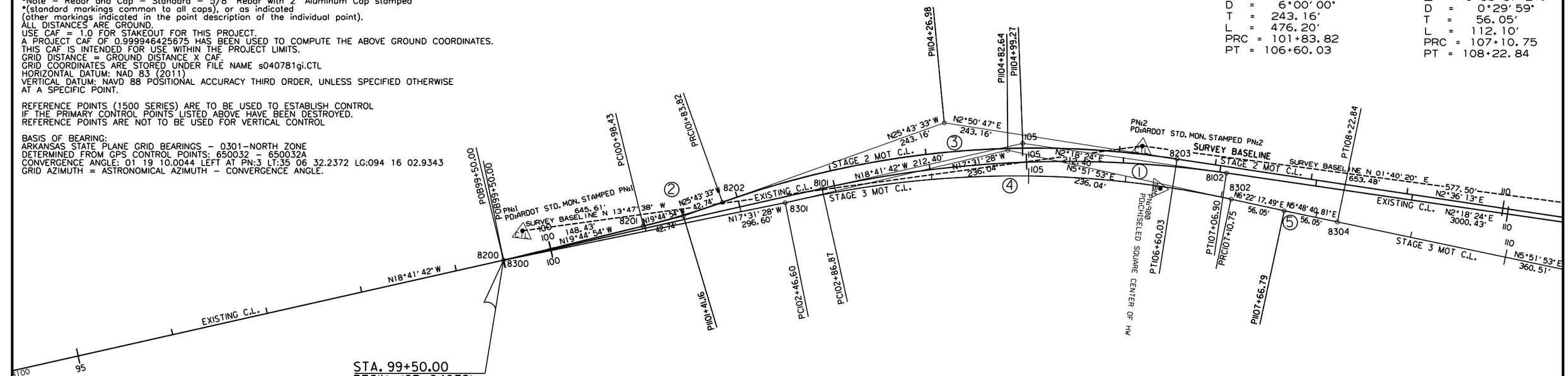

STA. 99+50.00
BEGIN JOB 040781
LOG MILE 3.17

EXISTING C.L. HWY. 71

POINT NAME	DESCRIPTION	STATION	NORTHING	EASTING
8101	PC	102+86.87	289158.3813	634294.4758
8102	PT	107+06.90	289571.8043	634234.9442
8103	POE	137+07.33	292569.8065	634355.7115

STAGE 2 MOT C.L.

POINT NAME	DESCRIPTION	STATION	NORTHING	EASTING
8200	POB	99+50.00	288839.3146	634402.4899
8201	PC	100+98.43	288979.0118	634352.3383
8202	PRC	101+83.82	289057.7350	634319.3478
8203	PT	106+60.03	289519.6576	634225.8741
8204	PI	112+37.53	290096.5638	634252.1064
8205	PI	114+57.56	290316.2246	634264.9558
8206	PI	115+64.26	290422.8363	634269.2492
8207	PI	117+84.30	290642.8191	634274.1051
8208	PI	130+57.03	291914.5231	634325.3189
8209	POE	132+77.07	292134.1841	634338.1635

STAGE 3 MOT C.L.

POINT NAME	DESCRIPTION	STATION	NORTHING	EASTING
8300	POB	99+50.00	288839.2901	634402.4509
8301	PC	102+46.60	289122.1246	634313.1405
8302	PRC	107+10.75	289579.4681	634261.3043
8304	PT	108+22.84	289690.9366	634273.2000
8306	PC	111+83.35	290049.5615	634310.0379
8308	PT	114+28.33	290294.1048	634324.5572
8310	PC	117+88.90	290654.4477	634330.4239
8312	PRC	121+29.22	290994.7693	634331.2317
8313	PT	122+26.61	291092.0854	634334.1579
8314	PC	123+07.22	291172.4830	634340.0041
8315	PT	125+07.06	291372.0481	634337.0745
8316	PC	125+61.39	291426.0961	634331.5454
8317	PCC	126+91.03	291555.5315	634325.6735
8318	PT	130+23.00	291887.3819	634334.2266
8319	POE	132+69.83	292134.1841	634338.1635

STATE OF ARKANSAS
REGISTERED PROFESSIONAL ENGINEER
No. 8940
MARK ASHER

12/12/2023

SURVEY CONTROL DETAILS - M.O.T.

#FILE#
#DATE# 12/23/28 AM ...19.5-Survey ControlDetails MOT.dgn

DATE REVISED	DATE REVISED	FED.RD. DIST.NO.	STATE	JOB NO.	SHEET NO.	TOTAL SHEETS
		6	ARK.	040781	55	115
		SURVEY CONTROL DETAILS				

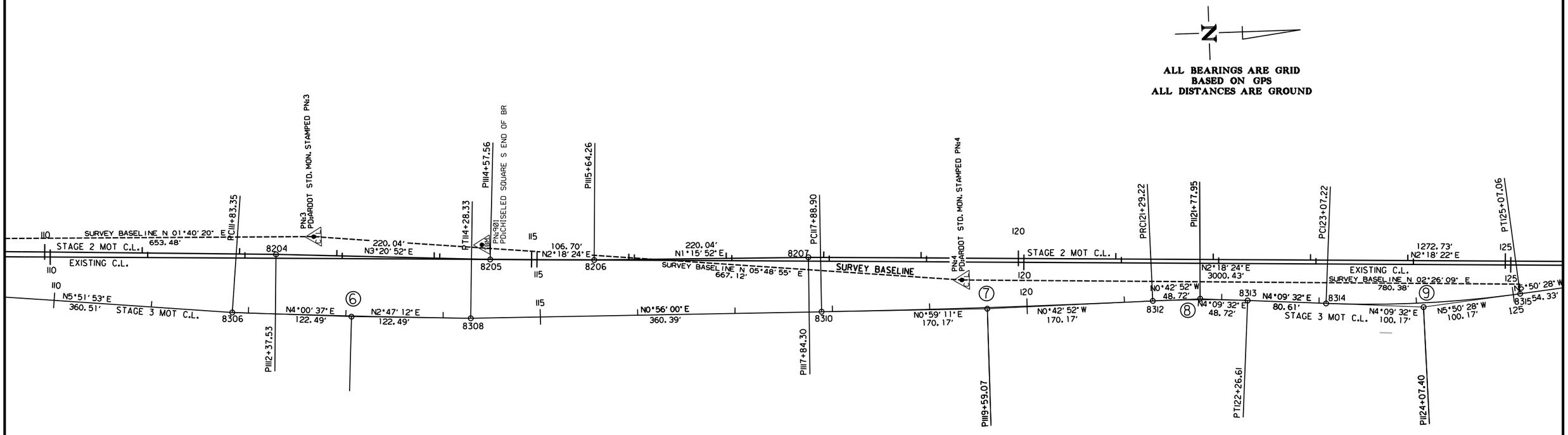

⑥ STAGE 3 MOT C.L.
PI = 113+05.84
Δ = 1°13' 25" LT.
D = 0°29' 58"
T = 122.49'
L = 244.98'
PC = 111+83.35
PT = 114+28.33

⑦ STAGE 3 MOT C.L.
PI = 119+59.07
Δ = 1°42' 03" LT.
D = 0°29' 59"
T = 170.17'
L = 340.32'
PC = 117+88.90
PRC = 121+19.22

⑧ STAGE 3 MOT C.L.
PI = 121+77.95
Δ = 4°52' 24" RT.
D = 5°00' 14"
T = 48.72'
L = 97.39'
PRC = 121+29.22
PT = 122+26.61

⑨ STAGE 3 MOT C.L.
PI = 124+07.40
Δ = 10°00' 00" LT.
D = 5°00' 14"
T = 100.17'
L = 199.84'
PC = 123+07.22
PT = 125+07.03

STATE OF ARKANSAS
REGISTERED PROFESSIONAL ENGINEER
No. 8940
MARK ASHER

12/12/2023

SURVEY CONTROL DETAILS - M.O.T.

#FILE# ...\9.5-Survey ControlDetails MOT.dgn
#DATE# 12/12/2023 AM

DATE REVISED	DATE REVISED	FED.RD. DIST.NO.	STATE	JOB NO.	SHEET NO.	TOTAL SHEETS
		6	ARK.	040781	56	115
		SURVEY CONTROL DETAILS				

ALL BEARINGS ARE GRID
BASED ON GPS
ALL DISTANCES ARE GROUND

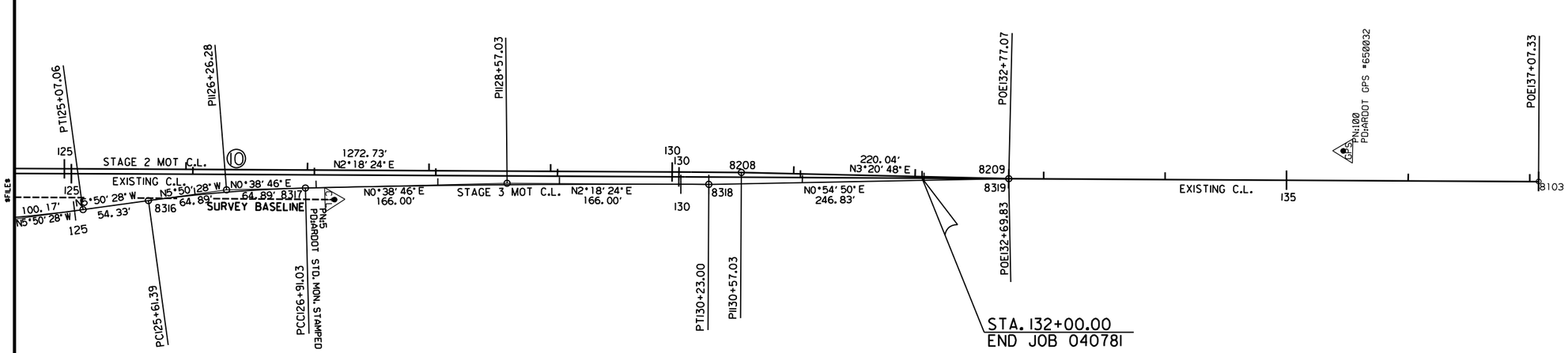

⑩ STAGE 3 MOT C.L.
PI = 128+57.03
Δ = 1°39'39" RT.
D = 0°30'01"
T = 166.00'
L = 331.97'
PRC = 126+91.03
PT = 130+23.00

STATE OF ARKANSAS
REGISTERED PROFESSIONAL ENGINEER
No. 8940
MARK ASHER

12/12/2023

SURVEY CONTROL DETAILS - M.O.T.

#FILE# ...\95-Survey ControlDetails MOT.dgn
#DATE# 12:30 AM

STATE OF ARKANSAS
REGISTERED PROFESSIONAL ENGINEER
No. 8940
MARK ASHER

12/12/2023

DATE REVISED	DATE REVISED	FED.RD. DIST.NO.	STATE	JOB NO.	SHEET NO.	TOTAL SHEETS
		6	ARK.	040781	57	115
		PLAN AND PROFILE SHEETS				

STA. 99+66 LT.
CONSTRUCT APPROACH = 5 CU. YDS

STA. 99+95 LT.
CONSTRUCT APPROACH = 15 CU. YDS

STA. 103+45 LT.
CONSTRUCT APPROACH = 105 CU. YDS

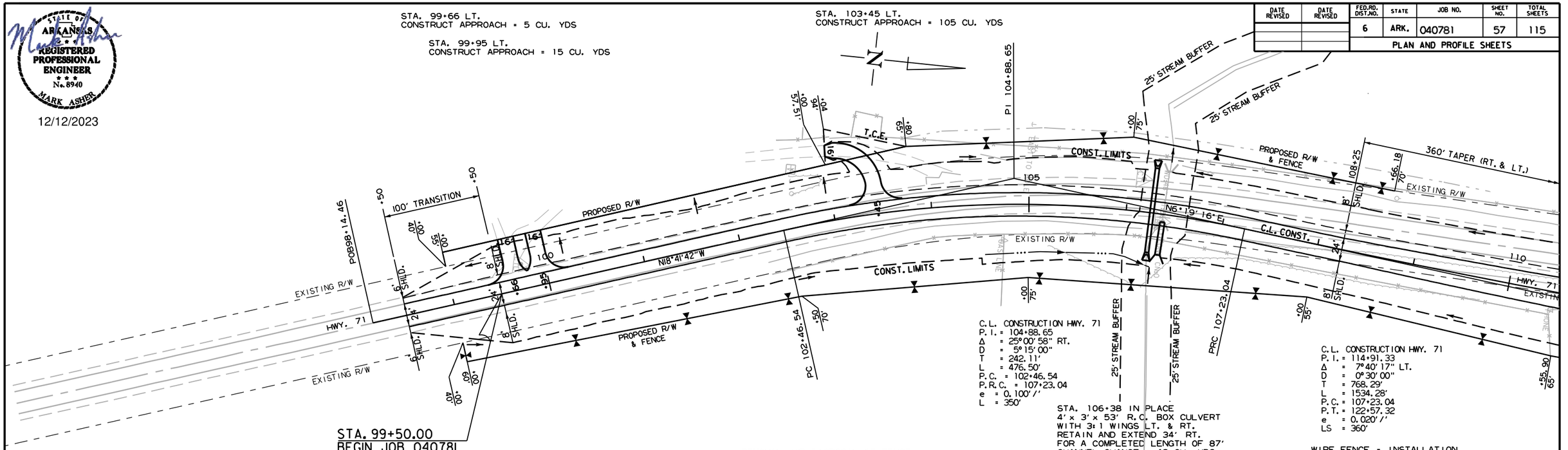

C.L. CONSTRUCTION HWY. 71
P.I. = 104+88.65
Δ = 25°00'58" RT.
D = 5°15'00"
T = 242.11'
L = 476.50'
P.C. = 102+46.54
P.R.C. = 107+23.04
e = 0.100'/'
L = 350'

C.L. CONSTRUCTION HWY. 71
P.I. = 114+91.33
Δ = 7°40'17" LT.
D = 0°30'00"
T = 768.29'
L = 1534.28'
P.C. = 107+23.04
P.T. = 122+57.32
e = 0.020'/'
LS = 360'

REMOVAL AND DISPOSAL OF FENCE

STA.	STA.	SIDE	LIN. FT.
99+00	110+00	RIGHT	1100
104+50	108+66	LEFT	416

STA. 106+38 IN PLACE
4' x 3' x 53' R.C. BOX CULVERT
WITH 3:1 WINGS LT. & RT.
RETAIN AND EXTEND 34' RT.
FOR A COMPLETED LENGTH OF 87'
CHANNEL CHANGE = 43 CU. YDS.

STA. 106+26 CONSTRUCT
48" X 88' R.C. PIPE CULVERT
(CL. IV) WITH FES LT. & RT.
(USE TYPE 3 BEDDING)
Q50 =206 cfs. D.A. =48 Ac.

WIRE FENCE - INSTALLATION

STA.	STA.	SIDE	TYPE	LIN. FT.
99+00	110+00	RIGHT	C	1100
104+50	108+66	LEFT	D-2	416

REFER TO SURVEY CONTROL DETAIL SHEETS FOR HORIZONTAL AND VERTICAL CONTROL DATA.

HWY 71 MAIN LANES

STA. 100+67.78 BEGIN SUPERELEVATION (N.C.)
STA. 103+06.03 MAX. SUPERELEVATION (0.068'/')
STA. 104+84.79 MAX. SUPERELEVATION (0.068'/')
STA. 107+23.04 END SUPERELEVATION (N.C.)

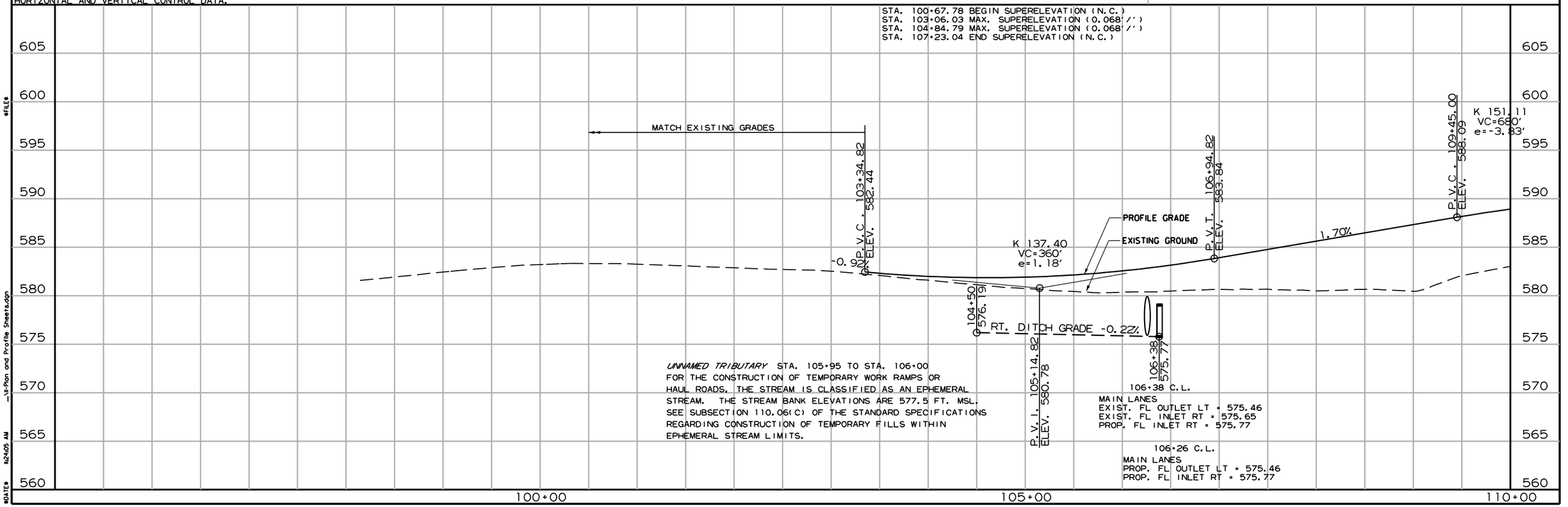

UNNAMED TRIBUTARY STA. 105+95 TO STA. 106+00
FOR THE CONSTRUCTION OF TEMPORARY WORK RAMPS OR HAUL ROADS, THE STREAM IS CLASSIFIED AS AN EPHEMERAL STREAM. THE STREAM BANK ELEVATIONS ARE 577.5 FT. MSL. SEE SUBSECTION 110.06(C) OF THE STANDARD SPECIFICATIONS REGARDING CONSTRUCTION OF TEMPORARY FILLS WITHIN EPHEMERAL STREAM LIMITS.

$FILE$
...\R-Plan and Profile Sheets.dgn
$Z2405 AM
$DATE$

DATE REVISED	DATE REVISED	FED.RD. DIST.NO.	STATE	JOB NO.	SHEET NO.	TOTAL SHEETS
		6	ARK.	040781	58	115

PLAN AND PROFILE SHEETS

CONCRETE DITCH PAVING (TYPE B)

STA.	STA.	SIDE	LENGTH	"W"	SQ. YDS.
STA. 122+48	STA. 123+48	LT. OF MAIN LANES	100 LIN. FT.	4'-0"	44.44
STA. 124+00	STA. 125+00	LT. OF MAIN LANES	100 LIN. FT.	4'-0"	44.44

REMOVAL AND DISPOSAL OF GUARDRAIL

STA.	STA.	LOCATION	LIN. FT.
113+68	114+18	RT OF MAIN LANE	50
113+18	114+18	LT OF MAIN LANE	100
115+86	117+61	LT OF MAIN LANE	175
115+86	116+86	RT OF MAIN LANE	100
122+45	125+20	LT OF MAIN LANE	275
121+67	124+93	RT OF MAIN LANE	326

STA. 112+48
INSTALL 18" x 30' PIPE CULVERT
LT. SIDE DRAIN
CONSTRUCT APPROACH = 30 CU. YDS.

REFER TO SPECIAL DETAILS
FOR INTERSECTION DETAILS.

STA. 112+77.78 C.L. CONSTRUCTION=
STA. 10+07.19 C.L. HWY. 252
Δ = 78°35'18"

C.L. CONSTRUCTION HWY. 71
P.I. = 126+57.67
Δ = 3°39'25" RT.
D = 0°30'00"
T = 365.85'
L = 731.41'
P.C. = 122+91.85
P.T. = 130+23.26
e = 0.020'/'
LS = 300'

MAIN LANES
STA. 123+70 IN PLACE
DBL. 12' x 6' x 32' R.C. BOX CULVERT
WITH 3:1 WINGS LT. & RT.
REMOVE

STA. 114+65.47 BRIDGE END
BRIDGE NO. 07501
147'-10⅜" INTEGRAL PRESTRESSED CONC.
GIRDER UNIT TYPE II (49-1⅛", 49-8⅛", 49-1⅛")
149'-6⅜" X VAR. WIDTH CLEAR ROADWAY
19°30' RT. FORWARD SKEW
149'-6⅜" BRIDGE LENGTH
STA. 116+15.00 BRIDGE END

HWY 71 - BR 02240 IN PLACE
STA. 114+49 TO STA. 115+59
110'-0" x 28'-0" CLEAR ROADWAY WIDTH
BRIDGE CONSISTING OF 3 R.C.D. GIRDER SPANS
(SPANS: 36', 36', 36')
REMOVE AS EXISTING BRIDGE STRUCTURE
(SITE NO. 1) = 1.00 LUMP SUM

STA. 121+27 IN PLACE
18' x 26' R.C. PIPE CULVERT
REMOVE & INSTALL 18"x45' PIPE CULVERT
RT. SIDE DRAIN
CONSTRUCT APPROACH = 70 CU. YDS.

MAIN LANES
STA. 123+97 CONSTRUCT
QUAD. 9'X6'X95' R.C. BOX CULV'T.
25° RT. FWD. SKEW
WITH 3:1 WINGS LT. & RT.
Q50=2,226 CFS. D.A.=1.51 SQ. MI.
SPAN=41.93'
CHANNEL CHANGE = 1256 CU. YDS.

C.L. CONSTRUCTION HWY. 71
P.I. = 114+91.33
Δ = 7°40'17" LT.
D = 0°30'00"
T = 768.29'
L = 1534.28'
P.C. = 107+23.04
P.T. = 122+57.32
e = 0.020'/'
LS = 360'

WIRE FENCE - INSTALLATION

STA.	STA.	SIDE	TYPE	LIN. FT.	16' GATE EA.
110+00	110+55	RIGHT	C	56	
110+55	112+59	RIGHT	D-2	208	
123+92	125+00	LEFT	D-2	108	1

GUARDRAIL - INSTALLATION

	GUARDRAIL (TYPE A)
STA. 113+03.11 TO STA. 114+46.86 LT OF MAIN LANE	75 LIN. FT.
STA. 114+35.07 TO STA. 114+75.07 RT OF MAIN LANE	
STA. 116+15.88 TO STA. 118+59.63 LT OF MAIN LANE	175 LIN. FT.
STA. 116+32.19 TO STA. 117+75.94 RT OF MAIN LANE	75 LIN. FT.

THRIE BEAM GUARDRAIL TERMINAL	GUARDRAIL TERMINAL (TYPE 2)	BRIDGE END TERMINAL
1 EACH	1 EACH	1 EACH
1 EACH	1 EACH	
1 EACH	1 EACH	

HWY 71 MAIN LANES

STATE OF ARKANSAS
REGISTERED PROFESSIONAL ENGINEER
No. 8940
MARK ASHER
12/12/2023

OBLITERATION OF EXIST. PAVEMENT

REFER TO SURVEY CONTROL DETAIL SHEETS FOR HORIZONTAL AND VERTICAL CONTROL DATA.

STA. 107+23.04 BEGIN SUPERELEVATION (N.C.)
STA. 110+83.04 MAX. SUPERELEVATION (R.C.)
STA. 119+14.59 MAX. SUPERELEVATION (R.C.)
STA. 122+74.59 END SUPERELEVATION (N.C.)

UNNAMED TRIBUTARY STA. 123+65 TO STA. 123+80
FOR THE CONSTRUCTION OF TEMPORARY WORK RAMPS OR HAUL ROADS, THE STREAM IS CLASSIFIED AS AN INTERMITTENT STREAM. THE STREAM BANK ELEVATIONS ARE 575.0 FT MSL.
SEE SUBSECTION 110.06(C) OF THE STANDARD SPECIFICATIONS REGARDING CONSTRUCTION OF TEMPORARY FILLS WITHIN INTERMITTENT STREAM LIMITS.

PRAIRIE CREEK STA. 114+80 TO STA. 115+75
FOR THE CONSTRUCTION OF TEMPORARY WORK RAMPS OR HAUL ROADS, THE STREAM IS CLASSIFIED AS AN PERENNIAL STREAM. THE STREAM BANK ELEVATIONS ARE 570.0 FT MSL.
SEE SUBSECTION 110.06(C) OF THE STANDARD SPECIFICATIONS REGARDING CONSTRUCTION OF TEMPORARY FILLS WITHIN PERENNIAL STREAM LIMITS.

MAIN LANES
PROP. FL INLET RT = 568.70
PROP. FL OUTLET LT = 567.87

123+97 C.L.

$FILE$
...\Ll-Plan and Profile Sheets.dgn
$DATE$ 12407 AM

DATE REVISED	DATE REVISED	FED.RD. DIST.NO.	STATE	JOB NO.	SHEET NO.	TOTAL SHEETS
		6	ARK.	040781	59	115
		PLAN AND PROFILE SHEETS				

STATE OF ARKANSAS
REGISTERED PROFESSIONAL ENGINEER
No. 8940
MARK ASHER
12/12/2023

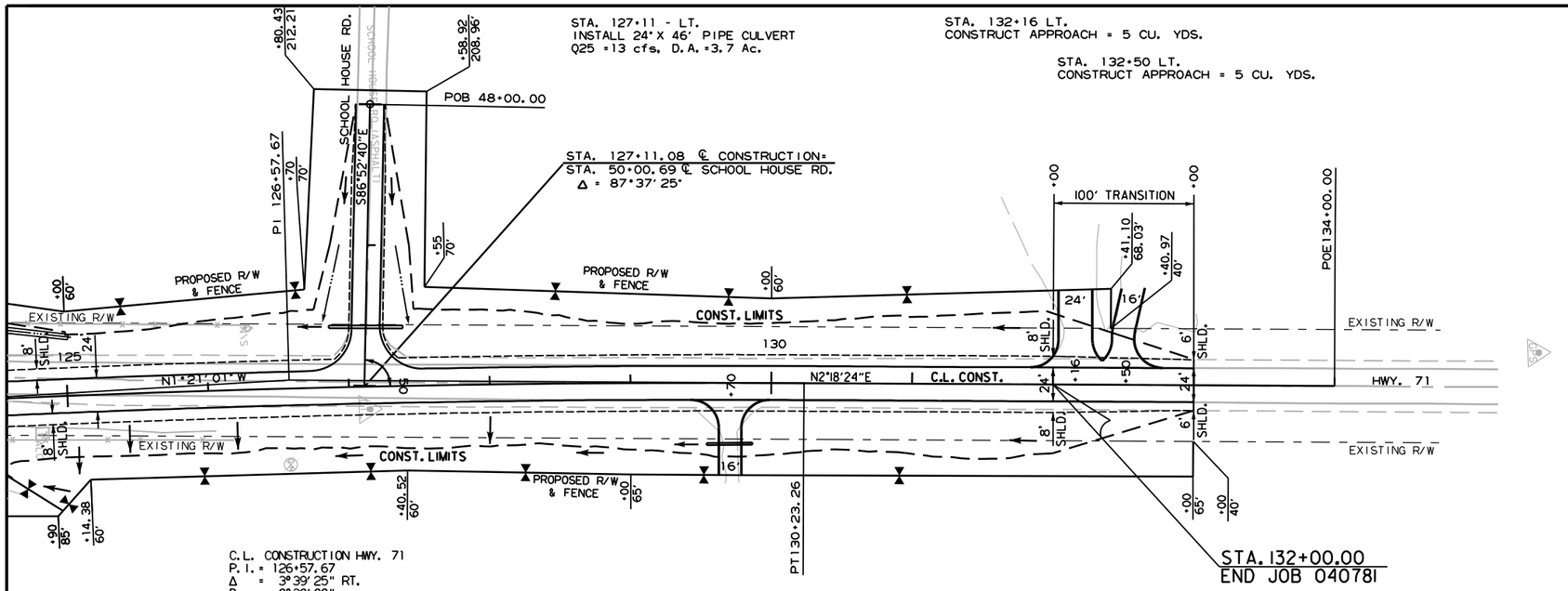

C.L. CONSTRUCTION HWY. 71
P.I. = 126+57.67
Δ = 3°39'25" RT.
D = 0°30'00"
T = 365.82'
L = 731.41'
P.C. = 122+91.85
P.T. = 130+23.26
e = 0.020'/'
LS = 300'

WIRE FENCE - INSTALLATION

STA.	STA.	SIDE	TYPE	LIN. FT.	16' GATE EA.
125+00	126+89	LEFT	D-2	189	
127+41	130+75	RIGHT	D-2	334	1
127+38	130+75	LEFT	D-2	337	

STA. 129+70
INSTALL 18' x 30' PIPE CULVERT
RT. SIDE DRAIN
CONSTRUCT APPROACH = 5 CU. YDS.

REFER TO SURVEY CONTROL DETAIL SHEETS FOR HORIZONTAL AND VERTICAL CONTROL DATA.

HWY 71 MAIN LANES

STA. 122+74.59 BEGIN SUPERELEVATION (N.C.)
STA. 125+74.59 MAX. SUPERELEVATION (R.C.)
STA. 129+00.00 MAX. SUPERELEVATION (R.C.)
STA. 132+00.00 END SUPERELEVATION (N.C.)

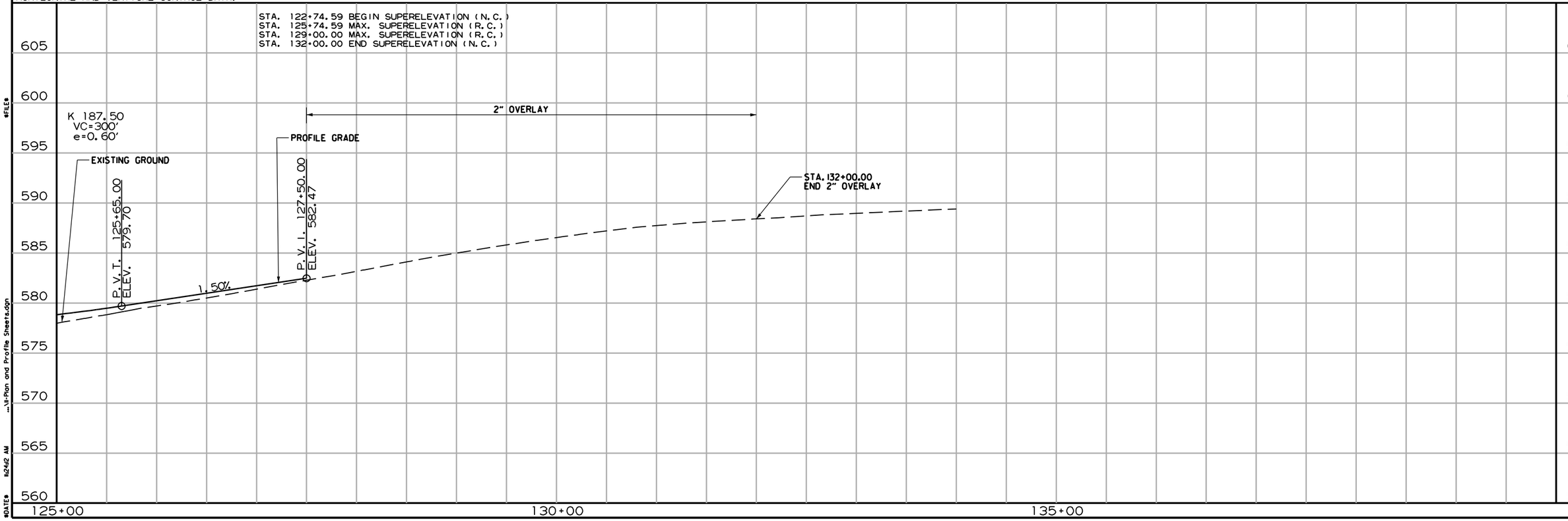

$FILE$
...\Ii-Plan and Profile Sheets.dgn
$DATE$ 8:24:42 AM

DATE REVISED	DATE REVISED	FED.RD. DIST.NO.	STATE	JOB NO.	SHEET NO.	TOTAL SHEETS
		6	ARK.	040781	60	115
		PLAN AND PROFILE SHEETS				

STATE OF ARKANSAS
REGISTERED PROFESSIONAL ENGINEER
No. 8940
MARK ASHER

12/12/2023

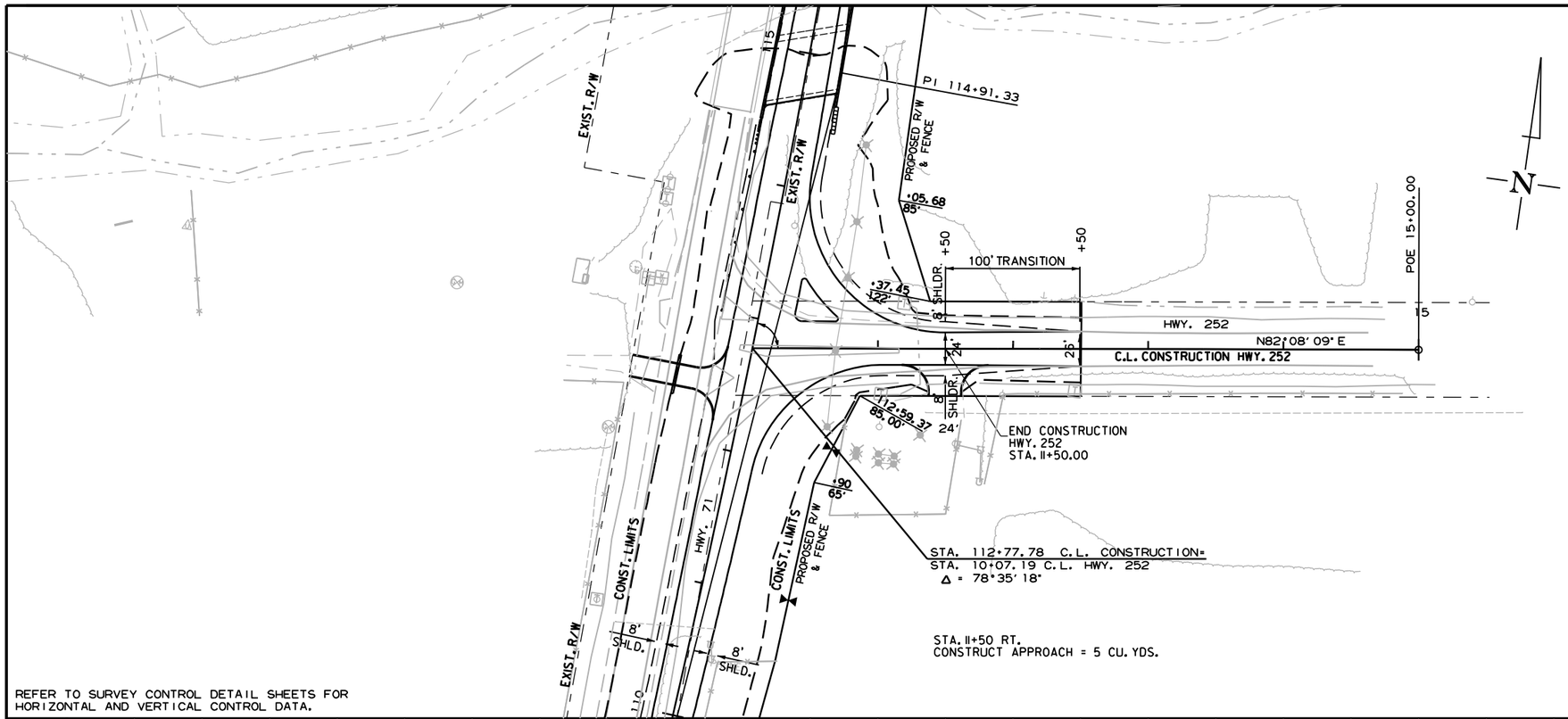

REFER TO SURVEY CONTROL DETAIL SHEETS FOR HORIZONTAL AND VERTICAL CONTROL DATA.

HWY 252

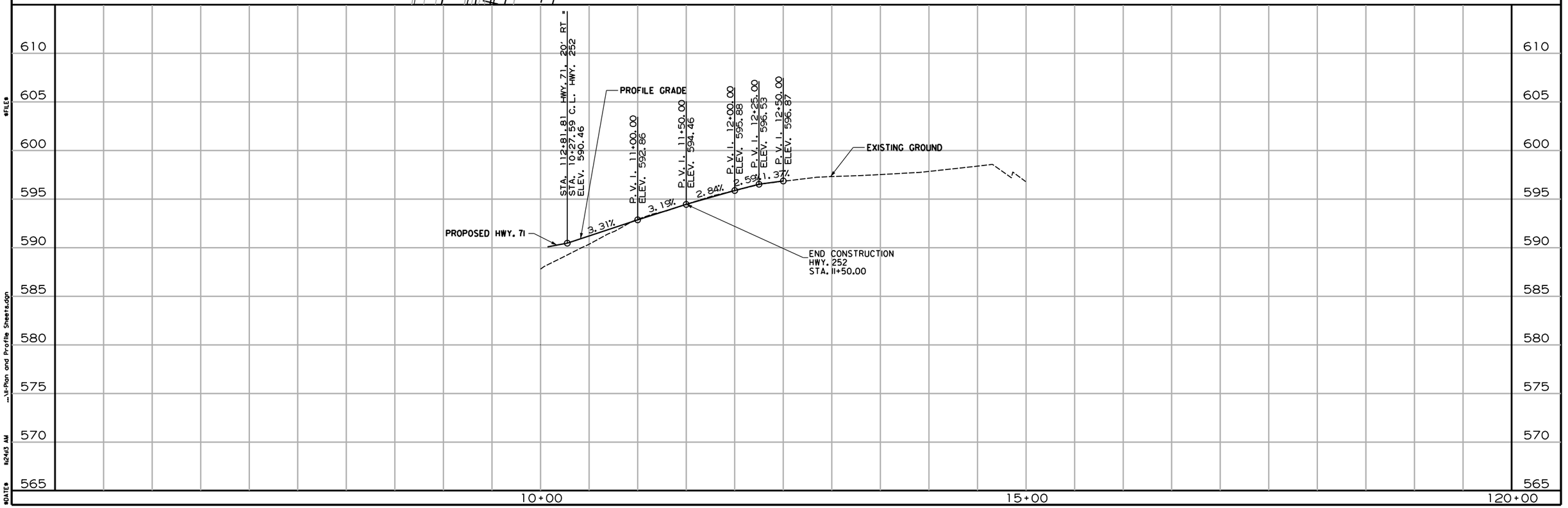

#FILE# ...\11-Plan and Profile Sheets.dgn #DATE# 12:48:3 AM

DATE REVISED	DATE REVISED	FED.RD. DIST.NO.	STATE	JOB NO.	SHEET NO.	TOTAL SHEETS
		6	ARK.	040781	61	115
		PLAN AND PROFILE SHEETS				

STATE OF ARKANSAS
REGISTERED PROFESSIONAL ENGINEER
No. 8940
MARK ASHER

12/12/2023

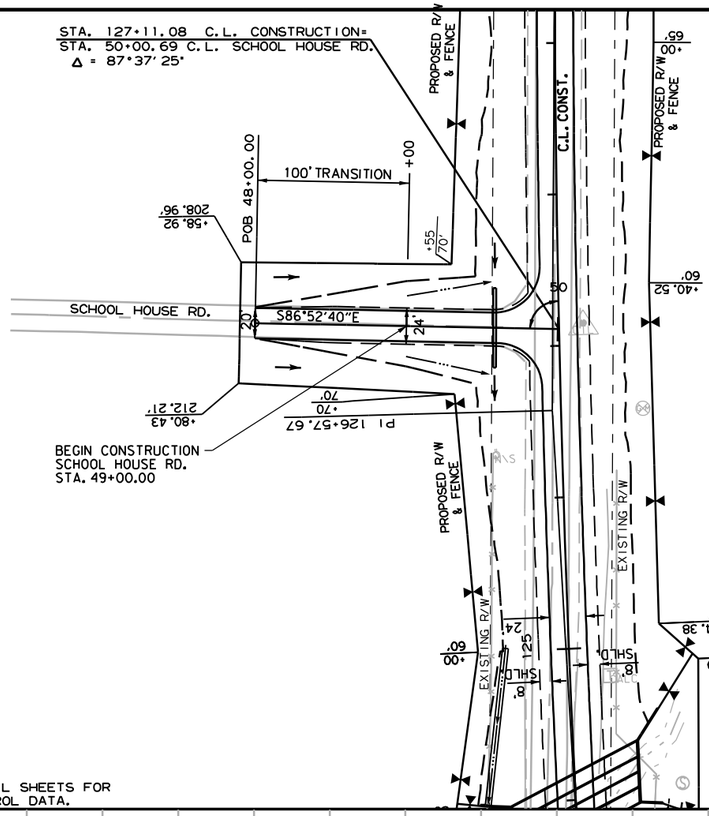

REFER TO SURVEY CONTROL DETAIL SHEETS FOR HORIZONTAL AND VERTICAL CONTROL DATA.

SCHOOL HOUSE RD

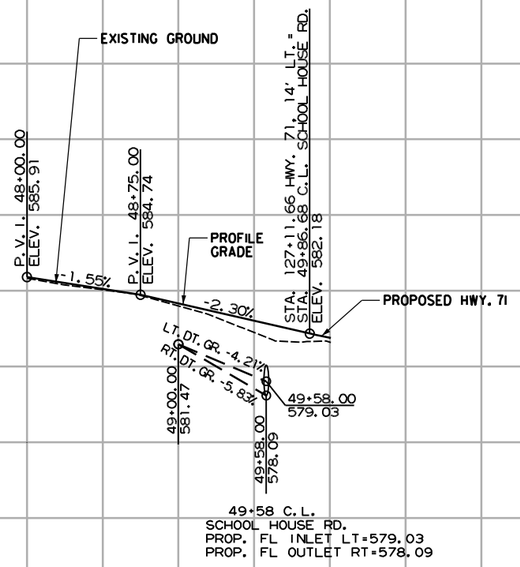

T:\Job\03337300 ArDot TO 144 Job 040781\700 CADD Files\770 Roadway Files\Drawings\11-Plan and Profile Sheets.dgn
12/12/2023 11:46:01 AM ...\11-Plan and Profile Sheets.dgn

DATE REVISED	DATE FILMED	DATE REVISED	DATE FILMED	FED.RD. DIST.NO.	STATE	FED.AID PROJ.NO.	SHEET NO.	TOTAL SHEETS
				6	ARK.			
				JOB NO.		040781	62	115
				(1) 07501		- LAYOUT -		61941

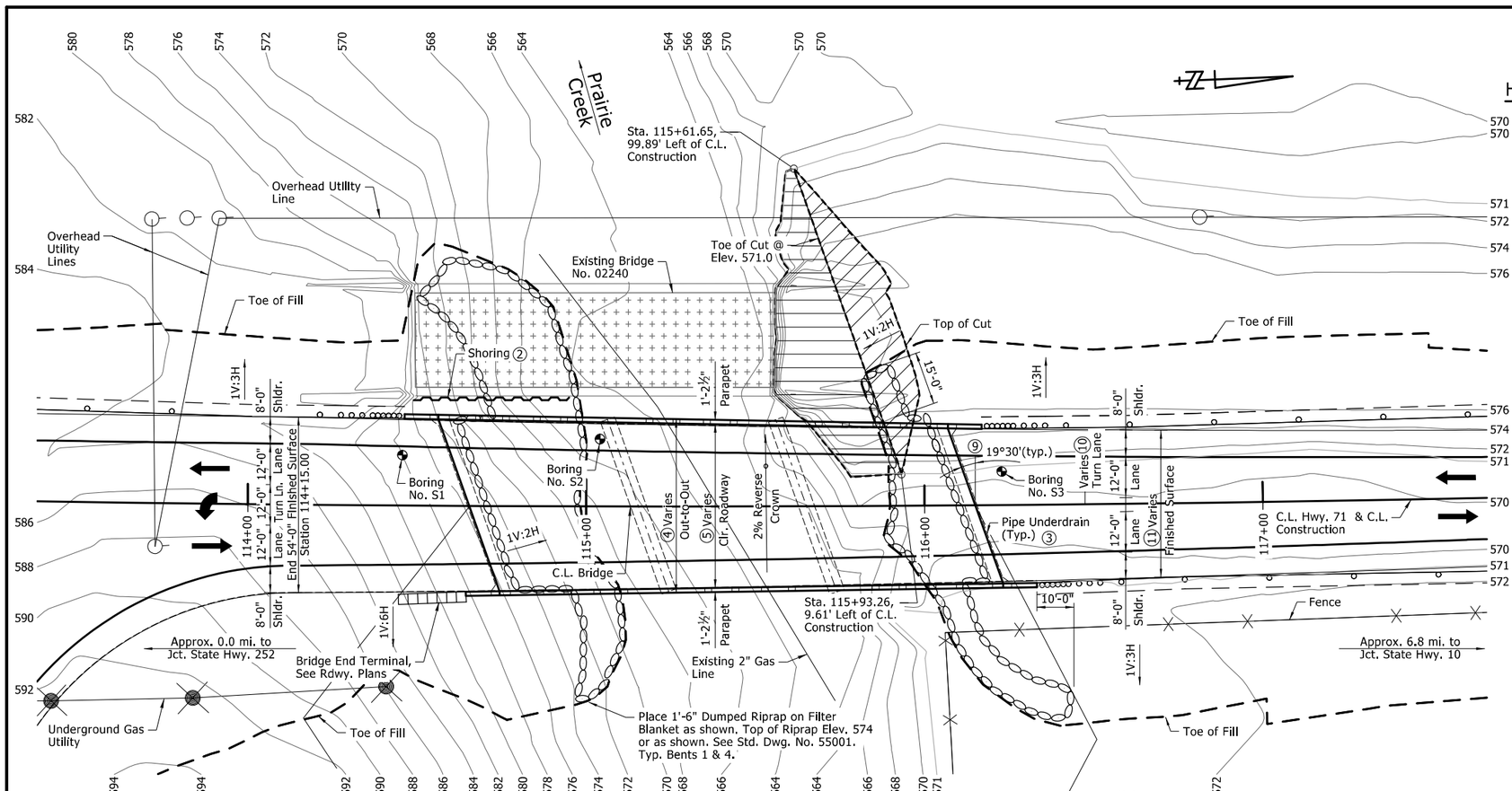

PLAN

HORIZONTAL CURVE DATA

Along C.L. Construction
P.I.= 114+91.33
Δ = 7°40' 17" Lt.
D = 0°30' 00"
T = 768.29'
L = 1534.28'
e = R.C.
R = 11459.16'

HYDRAULIC DATA

FLOOD DESCRIPTION	FREQUENCY	DISCHARGE	(1) NATURAL WATER SURFACE ELEVATION	WATER SURFACE ELEV. WITH BACKWATER
	YEARS	CFS	FEET	FEET
Design	50	5,658	573.4	573.9
Base	100	6,753	573.8	574.2
Extreme	500	9,664	574.9	576.6
Overtopping	>500	>500	>500	>500

(1) Unconstricted water surface elevation without structure or roadway approaches.

Q100 backwater elevation for existing structure = 575.2 feet.

Drainage Area = 12.7 square miles.

Historical H.W. Elevation = N/A

(2) Shoring may be required during construction. See Job Special Provision "Shoring".

(3) Install 4" Dia. Pipe Underdrain with Outlet Protectors at both bridge ends in accordance with Section 611 and Std. Dwg. PU-1. For additional details, see Dwg. No. 61958. Pipe Underdrain will not be paid for directly but shall be considered subsidiary to "UNCLASSIFIED EXCAVATION".

(4) Varies - 53'-4 1/16" at Begin Bridge to 48'-4" at End Bridge

(5) Varies - 50'-10" at Begin Bridge to 45'-10" at End Bridge

(6) C.L. Deck at C.L. Bent to Low Side Top of Cap = 4'-2 9/16"

(7) C.L. Deck at C.L. Bent to Low Side Top of Cap = 4'-2¼"

(8) Proposed Low Bridge Chord Elevation = 580.65 feet and occurs at Sta. 116+03.73

(9) Skew measured from a line normal to C.L. Bridge, see "STAKING DIAGRAM" on Dwg. No. 61943.

(10) Turn lane varies from 12'-0" at Sta. 114+30.00 to 0'-0" at Sta. 117+90.00.

(11) Finished Surface width varies from 54'-0" at Sta. 114+30.00 to 40'-0" at Sta. 117+90.00.

Notes:
For R/W Data and Guardrail Details, See Roadway Plans.

Use Type 1 Special Approach Slab at begin bridge and Type 2 Special Approach Slab at end bridge. See Dwg. Nos. 61964 & 61965, respectively.

Use Type 1 & 2 Special Approach Gutters at begin bridge and Type 3 & 4 Special Approach Gutters at end bridge. See Dwg. Nos. 61962 & 61963, respectively. Eliminate or modify Type 2 Special Approach Gutter curb section at SE corner of bridge to fit bridge end terminal. No additional payment will be made for this modification.

The Contractor shall excavate the existing embankment as shown at North end of Bridge to Elev. 571.0 Approx. 445 cubic yards of excavation.

For "GENERAL NOTES" and "ELEVATION OF SOIL BORINGS", See Dwg. No. 61942.

C.L. Construction is on a 0°30' 00" Curve left. Begin/End bridge and C.L. Bent Lines are on a 19°30' 00" Right Forward skew measured from a line normal to C.L Bridge. C.L. Bridge is along a chord from C.L. Construction at Begin Bridge to C.L. Construction at End Bridge. For more information refer to "STAKING DIAGRAM" on Dwg. No. 61943.

Stations and Elevations shown are along C.L. Construction. Elevations shown are actual top of deck elevations at C.L. Construction. Any vertical dimension referenced to C.L. Deck is based on actual top of deck elevation at C.L. Construction.

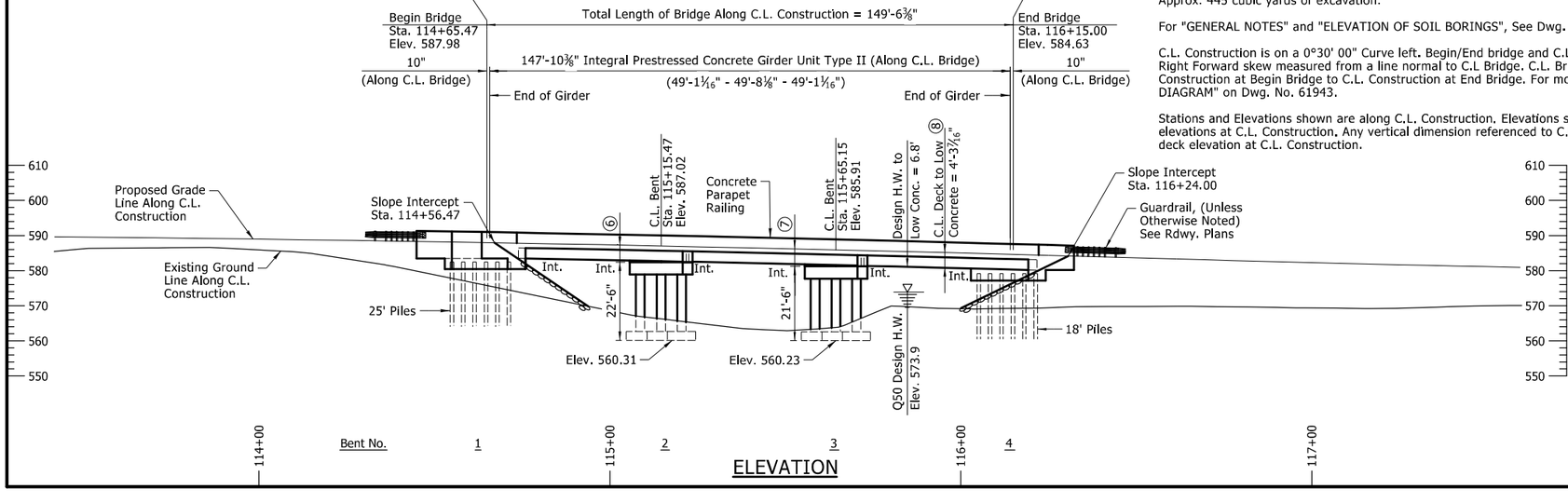

ELEVATION

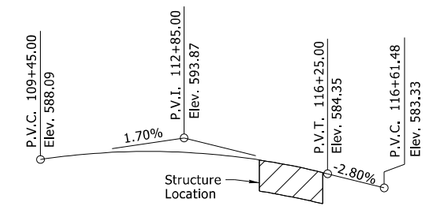

Length = 680'

VERTICAL CURVE DATA

Stations and Elevations are along C.L. Construction
No Scale

STATE OF ARKANSAS
REGISTERED PROFESSIONAL ENGINEER
No. 8940
MARK ASHER
12/12/2023

BRIDGE ENGINEER
PRINT DATE: $$DATE$$

SHEET 1 OF 3
LAYOUT OF BRIDGE
HIGHWAY 71 OVER PRAIRIE CREEK
PRAIRIE CREEK STR. & APPRS. (HWY. 71) (S)
SEBASTIAN COUNTY
ROUTE 71 SECTION 13

ARKANSAS STATE HIGHWAY COMMISSION
LITTLE ROCK, ARKANSAS

DRAWN BY:	JPC	DATE:	04/2020	FILENAME:	b040781_l1.dgn
CHECKED BY:	MAA	DATE:	04/2020		
DESIGNED BY:	JPC	DATE:	04/2020	SCALE:	1" = 20'
BRIDGE NO.	07501			DRAWING NO.	61941

DATE REVISED	DATE FILMED	DATE REVISED	DATE FILMED	FED.RD. DIST.NO.	STATE	FED.AID PROJ.NO.	SHEET NO.	TOTAL SHEETS
				6	ARK.			
				JOB NO.		040781	63	115
				1	07501	- LAYOUT -		61942

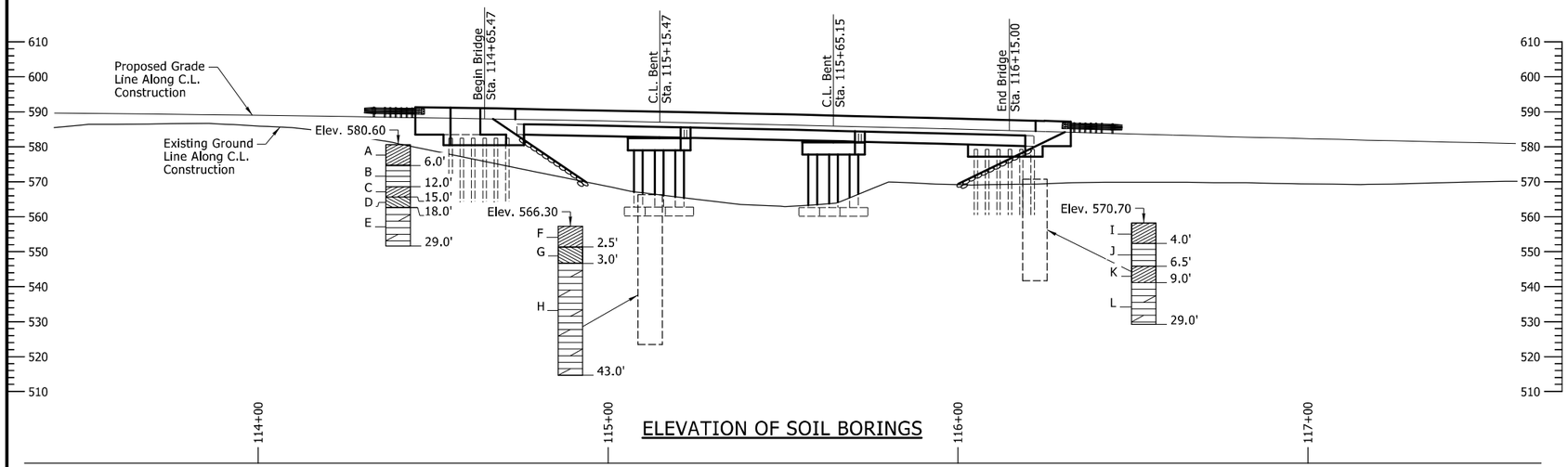

ELEVATION OF SOIL BORINGS

GENERAL NOTES

BENCHMARK: Vertical Control Data are shown on the survey control data sheets.

CONSTRUCTION SPECIFICATIONS: Arkansas State Highway and Transportation Department Standard Specifications for Highway Construction (2014 edition) with applicable Supplemental Specifications and Special Provisions. Section and Subsection refer to the Standard Construction Specifications unless otherwise noted in the plans.

DESIGN SPECIFICATIONS: AASHTO LRFD Bridge Design Specifications, Eighth Edition (2017).

LIVE LOADING: HL-93

SEISMIC ZONE: 1 SD1: 0.04 SITE CLASS: A

SEISMIC OPERATION CLASSIFICATION: Other

MATERIALS AND STRENGTHS:

Class S(AE) Concrete (Superstructure)	f'c = 4,000 psi
Class S Concrete (Prestressed concrete girders)	f'c = 8,000 psi
Prestressing Strands (AASHTO M 203, Gr. 270)	fpu = 270,000 psi
Class S Concrete (Substructure)	f'c = 3,500 psi
Reinforcing Steel (AASHTO M 31 or M 322, Type A, Gr. 60)	fy = 60,000 psi
Structural Steel (ASTM A709, Gr. 50)	fy = 50,000 psi
Structural Steel (ASTM A709, Gr. 36)	fy = 36,000 psi

BORING LOGS: Boring logs may be obtained from the Construction Contract Developement Section of the Program Management Division.

STEEL PILING: Piling at bents 1 & 4 shall be HP 12x53 (Grade 50) and shall be driven with an approved air, steam, or diesel hammer to a minimum ultimate bearing capacity of 97 tons per pile and into the material designated as moderatley hard dark gray, brown and tan weather shale or moderately hard dark gray shale on the boring legend. Minimum penetration shall be 15' below bottom of cap. Piling shall be driven after embankment to bottom of cap is in place. Lengths shown are for estimating quantities and for use in determining payment for cut-off and build-up in accordance with Section 805. The Contractor shall use approved steel H-Pile driving points on all piles.

PREBORING: (Integral End Bents, Steel H-Piles into shallow Rock)
Preboring is required for all piling at Bents 1 and 4. Preboring shall be to a minimum depth of 5' into material designated as Moderately hard shale on the boring legend or to a depth of 15' below the bottom of the cap, whichever is lower. Prebored holes shall have a diameter 9" greater than the diagonal of the pile for a depth of 10' below the bottom of the cap. The size and depth of the remaining preboring shall be determined in the field by the Engineer. After driving is completed, the prebored holes shall be backfilled with Class S Concrete to within 10' of the bottom of the cap, and the remaining 10' shall be backfilled sand or pea gravel. The conctractor shall be responsible for keeping prebored holes free of debris prior to driving piles and backfilling which may require the use of temporary casings or other approved methods. Any related cost for backfilling and temporary casing will not be paid for directly, but shall be considered subsidiary to the item "Preboring".

SPREAD FOOTINGS: Footings shall be set a minimum of 2' into material designated as moderately hard shale on the boring legend. The top of the footings at Bents 2 & 3 shall be set at or below the channel bottom as determined by the lowest channel elevation within the footprint of the footing. Foundations for footings shall be prepared in accordance with Subsection 801.04. Rock excavations shall be made to neat lines of the concrete footings. Care shall be exercised to avoid shattering of rock faces by excessive blasting. Concrete in footings shall be poured directly against excavated surfaces of rock.

BRIDGE DECK: The concrete bridge deck shall be given a tine finish as specified for final finishing in Subsection 802.19 for Class 5 Tined Bridge Roadway Surface Finish.

PROTECTIVE SURFACE TREATMENT: Class 2 Protective Surface Treatment shall be applied to the roadway surface and to the roadway face and top of the concrete parapet rails in accordance with Section 803.

DETAIL DRAWINGS:	DRAWING NO(S).
End Bent 1	61944 - 61945
Intermediate Bent 2	61946 - 61947
Intermediate Bent 3	61948 - 61949
End Bent 4	61950 - 61951
148'-4" Integral Prestressed Concrete Girder Unit	61952 - 61961
Type 1 & 2 Special Approach Gutters	61962
Type 3 & 4 Special Approach Gutters	61963
Type 1 Special Approach Slab	61964
Type 2 Special Approach Slab	61965
Standard Details for Steel H-Piles and Pile Encasements	55020

EXISTING BRIDGE: Existing Bridge No. 02240 (Site No. 1) (Log Mile 3.48) is 32.0' wide (27.9' clear roadway) and 110.0' long and consists of reinforced concrete deck girder spans (3 spans total) supported by concrete stem wall intermediate bents and vertical wall abutments. The existing bridge is located approximately 41' downstream from the proposed new bridge. Plans of the existing structure, if available, may be obtained upon request to the Construction Contract Development Section of the Program Management Division.

REMOVAL AND SALVAGE: After the new bridge is open to traffic, the Contractor shall remove existing Bridge No. 02240 in accordance with Section 205 of the Standard Specifications. All material from the existing bridge shall become the property of the Contractor except the following which shall remain the property of the State:

- Existing Bearings

The Contractor shall notify the Department prior to removal to determine the specific pieces deemed salvageable. The Contractor shall provide temporary storage and on-site loading onto ARDOT equipment for removal of salvage items from the site. This work shall be considered incidental to the item "Removal of Existing Bridge Structure (Site No. 1)".

MAINTENANCE OF TRAFFIC: See Roadway Plans.

"N" VALUES

Boring No. S1
Sta. 114+40 - 15' Left of Center Line of Construction

1.0 - 2.0	N=15
3.0 - 4.0	N=12
5.0 - 6.0	N=13
7.0 - 8.0	N=13
9.5 - 10.5	N=39
13.5 - 13.8	N=50/3"

Boring No. S2
Sta. 115+12 - 20' Left of Center Line of Construction

1.0 - 2.0	N=x

Boring No. S3
Sta. 116+22 - 10' Left of Center Line of Construction

1.0 - 2.0	N=7
3.0 - 4.0	N=5
5.0 - 6.0	N=17
7.0 - 7.5	N=50/6"
8.5 - 8.8	N=50/3"

BORING LEGEND

A- Stiff brown, reddish brown and gray silty clay w/crushed stone (fill)
B- Stiff reddish brown and gray silty clay w/ferrous stains
C- Very stiff reddish tan and gray silty clay w/highly weathered shale seams and layers (completely weathered shale)
D- Moderately hard dark gray and tan weathered shale w/ferrous stains in bedding plans
E- Moderately hard dark gray shale, slightly arenaceous and flat bedded w/very close sandstone partings - with near-vertical fractures at 17.5 to 20 ft
F- Very loose dark gray fine to coarse shale gravel
G- Moderately hard dark gray slightly weathered shale w/ferrous stains in bedding planes
H- Moderately hard dark gray shale, slightly arenaceous and flat bedded w/very close sandstone partings
I- Firm brown and reddish brown silty clay w/shale fragments (fill) - soft below 2 ft
J- Stiff brown and gray silty clay w/shale fragments (completely weathered shale)
K- Moderately hard dark gray and brown weathered shale w/ferrous stains
L- Moderately hard dark shale, slightly arenaceous and flat bedded w/very close sandstone partings with close healed high-angle fractures

STATE OF ARKANSAS
REGISTERED PROFESSIONAL ENGINEER
No. 8940
MARK ASHER

12/12/2023

BRIDGE ENGINEER
PRINT DATE: $$DATE$$

SHEET 2 OF 3
LAYOUT OF BRIDGE
HIGHWAY 71 OVER PRAIRIE CREEK
PRAIRIE CREEK STR. & APPRS. (HWY. 71) (S)
SEBASTIAN COUNTY
ROUTE 71 SECTION 13
ARKANSAS STATE HIGHWAY COMMISSION
LITTLE ROCK, ARKANSAS

DRAWN BY:	JPC	DATE:	04/2020	FILENAME:	b040781_l2.dgn
CHECKED BY:	MAA	DATE:	04/2020		
DESIGNED BY:	JPC	DATE:	04/2020	SCALE:	1" = 20'
BRIDGE NO.	07501			DRAWING NO.	61942

DATE REVISED	DATE FILMED	DATE REVISED	DATE FILMED	FED.RD. DIST.NO.	STATE	FED.AID PROJ.NO.	SHEET NO.	TOTAL SHEETS
				6	ARK.			
				JOB NO.		040781	64	115
				① 07501		- LAYOUT -		61943

HORIZONTAL CURVE DATA

Along C.L. Construction

P.I.= 114+91.33
Δ = 7°40' 17" Lt.
D = 0°30' 00"
T = 768.29'
L = 1534.28'
e = R.C.
R = 11459.16'

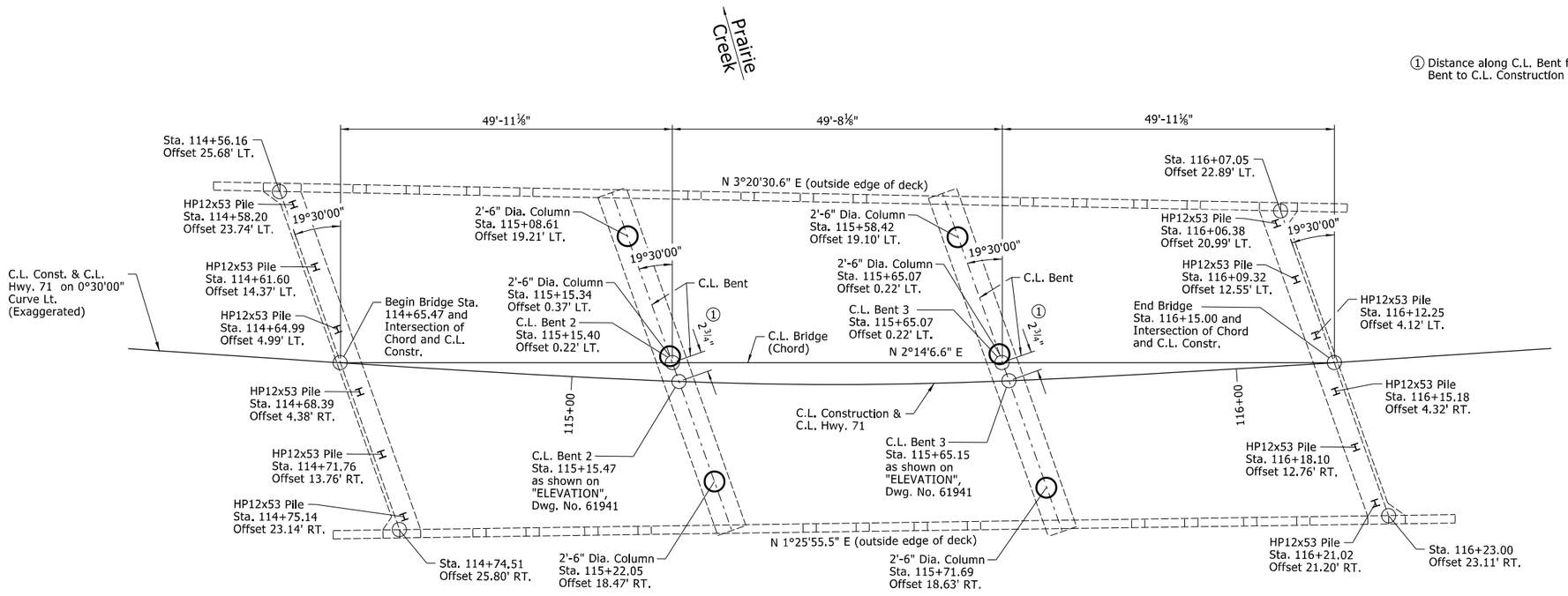

① Distance along C.L. Bent from intersection of Chord at C.L. Bridge and C.L. Bent to C.L. Construction and C.L. Bent

STAKING DIAGRAM

Note:
C.L. Construction is on a 0°30' 00" Curve left. Begin/End bridge and C.L. Bent Lines are on a 19°30' 00" Right Forward skew measured from a line normal to C.L Bridge. C.L. Bridge is along a chord from C.L. Construction at Begin Bridge to C.L. Construction at End Bridge.

STATE OF ARKANSAS
REGISTERED PROFESSIONAL ENGINEER
No. 8940
MARK ASHER
12/12/2023

BRIDGE ENGINEER
PRINT DATE: $$DATE$$

SHEET 3 OF 3
LAYOUT OF BRIDGE
HIGHWAY 71 OVER PRAIRIE CREEK
PRAIRIE CREEK STR. & APPRS. (HWY. 71) (S)
SEBASTIAN COUNTY
ROUTE 71 SECTION 13
ARKANSAS STATE HIGHWAY COMMISSION
LITTLE ROCK, ARKANSAS

DRAWN BY: JPC DATE: 04/2020
CHECKED BY: MAA DATE: 04/2020
DESIGNED BY: JPC DATE: 04/2020
BRIDGE NO. 07501
FILENAME: b040781_l3.dgn
SCALE: No Scale
DRAWING NO. 61943

DATE REVISED	DATE FILMED	DATE REVISED	DATE FILMED	FED.RD. DIST.NO.	STATE	FED.AID PROJ.NO.	SHEET NO.	TOTAL SHEETS
				6	ARK.			
				JOB NO.		040781	65	115
				(1) 07501		- END BENT 1 -		61944

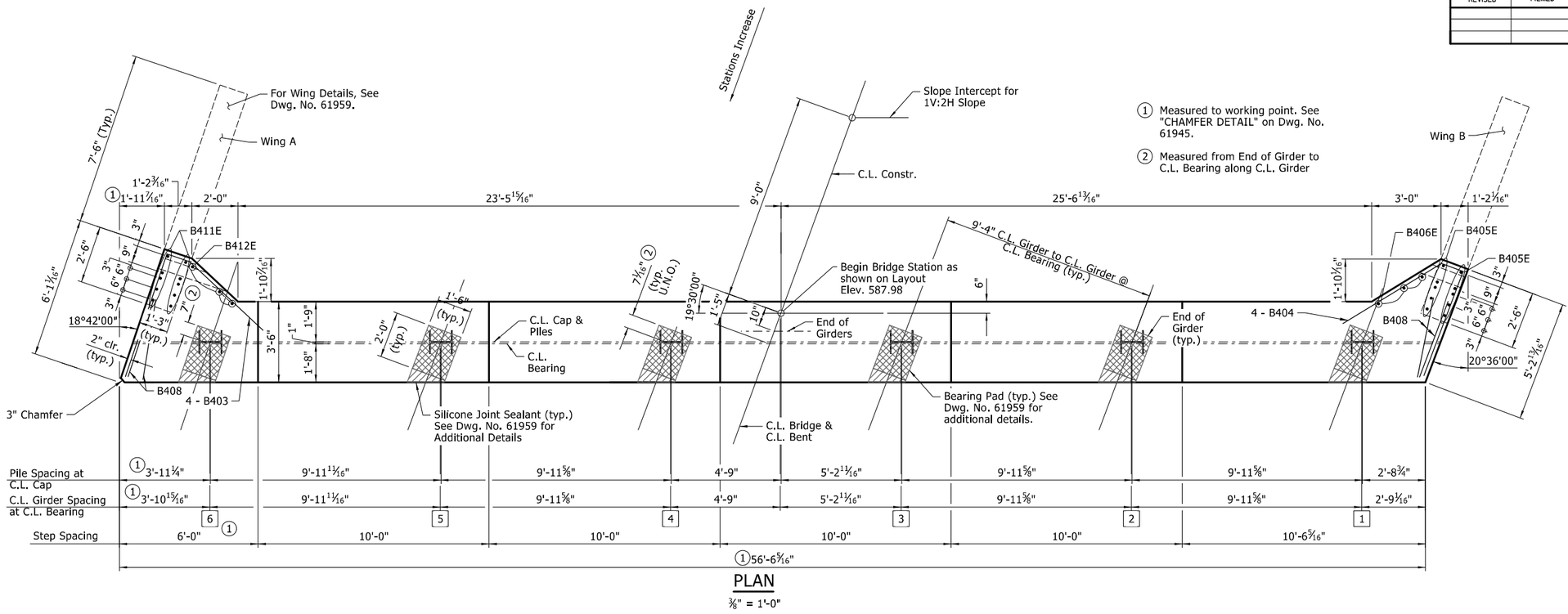

PLAN

⅜" = 1'-0"

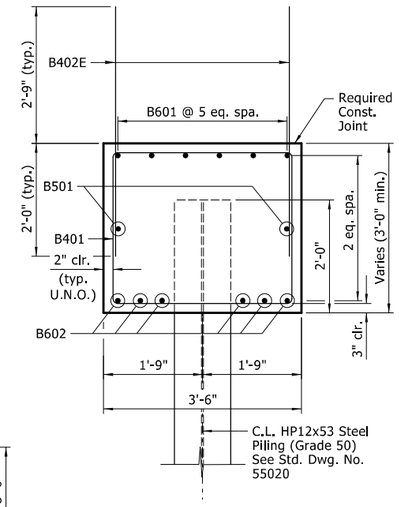

SECTION A-A

¾" = 1'-0"

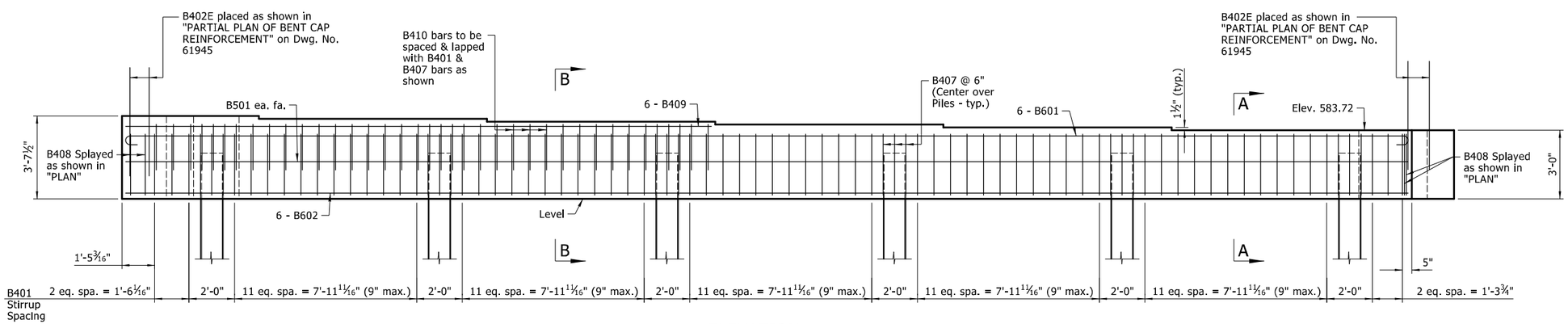

ELEVATION

⅜" = 1'-0"

Looking Back

Notes:
B402E bars shall have a 2'-0" embedment into the end bent cap. B405E, B406E, B411E & B412E bars shall have a 2'-9" embedment into the end bent cap.

See Dwg. No. 61945 for "SECTION B-B".

GENERAL NOTES

CONCRETE:
Unless otherwise noted, concrete in caps shall be Class S with a minimum 28 day compressive strength f'c = 3,500 and shall be poured in the dry.

All exposed corners shall be chamfered ¾" unless otherwise noted.

REINFORCING STEEL:
All reinforcing steel shall be Grade 60 (yield strength = 60,000 psi) conforming to AASHTO M 31 or M 322, Type A, with mill test reports.

Granular Backfill and Pipe Underdrain required behind Bent; See Dwg. No. 61959.

STATE OF ARKANSAS
REGISTERED PROFESSIONAL ENGINEER
No. 8940
MARK ASHER

12/12/2023

BRIDGE ENGINEER
PRINT DATE: $$DATE$$

SHEET 1 OF 2
DETAILS OF END BENT 1
ROUTE SECTION
ARKANSAS STATE HIGHWAY COMMISSION
LITTLE ROCK, ARKANSAS

DRAWN BY:	JPC	DATE:	05/2020	FILENAME:	b040781_b11.dgn
CHECKED BY:	CJF	DATE:	06/2020		
DESIGNED BY:	JPC	DATE:	05/2020	SCALE:	As Shown
BRIDGE NO.	07501			DRAWING NO.	61944

DATE REVISED	DATE FILMED	DATE REVISED	DATE FILMED

FED.RD. DIST.NO.	STATE	FED.AID PROJ.NO.	SHEET NO.	TOTAL SHEETS
6	ARK.			
JOB NO.		040781	66	115
07501		- END BENT 1 -		61945

(1) Measured to working point. See "CHAMFER DETAIL".

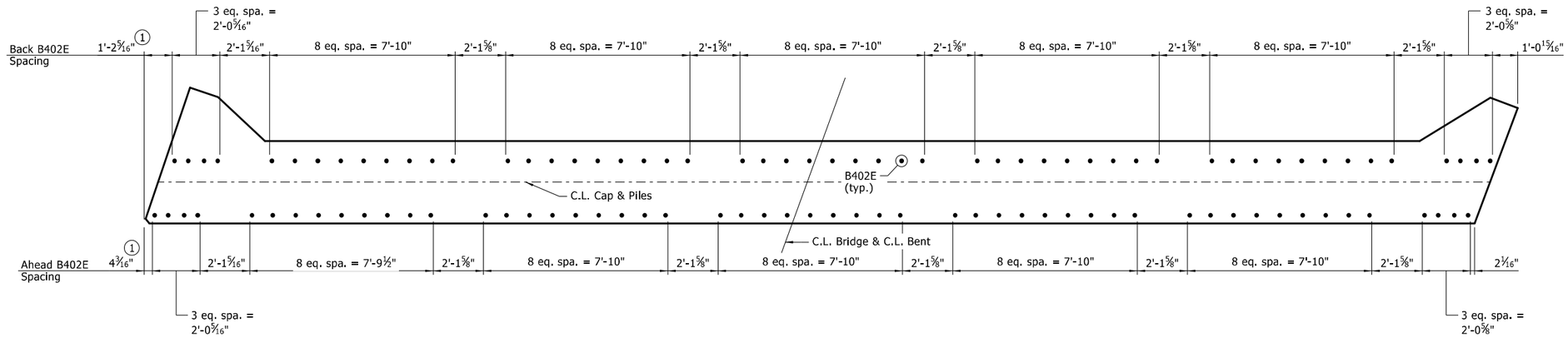

PARTIAL PLAN OF BENT CAP REINFORCING

3/8" = 1'-0"

BAR LIST

MARK	NO. REQ'D	LENGTH	PIN. DIA.
B401	66	11'-10"	2"
B402E	106	4'-9"	Str.
B403	4	11'-6"	3"
B404	4	10'-9"	3"
B405E	10	6'-8"	Str.
B406E	3	5'-6"	Str.
B407	18	8'-2"	2"
B408	4	12'-6"	2"
B409	6	25'-8"	Str.
B410	38	7'-0"	2"
B411E	10	7'-3"	Str.
B412E	3	6'-1"	Str.
B501	2	56'-2"	Str.
B601	6	57'-6"	4 1/2"
B602	6	56'-2"	Str.

BENDING DIAGRAMS

Notes:
Dimensions of bars are out-to-out.
All bars designated with an "E" suffix are to be epoxy coated.

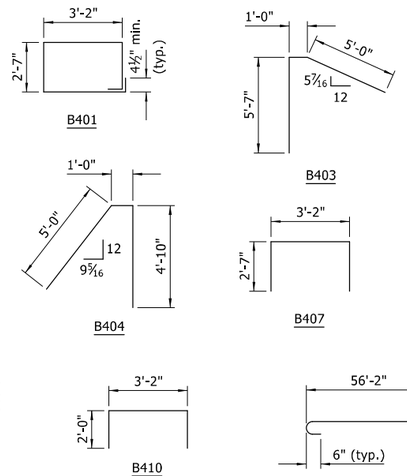

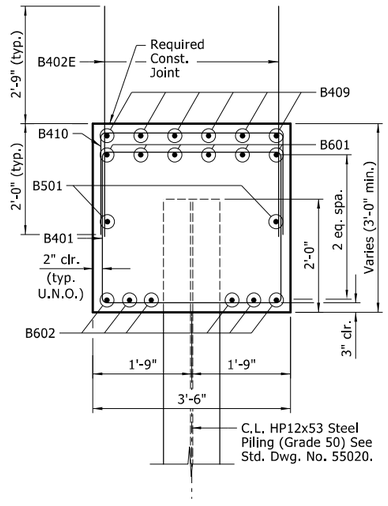

SECTION B-B

3/4" = 1'-0"

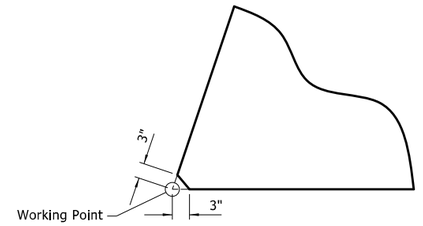

CHAMFER DETAIL

1" = 1'-0"

STATE OF ARKANSAS
REGISTERED PROFESSIONAL ENGINEER
No. 8940
MARK ASHER

12/12/2023

BRIDGE ENGINEER
PRINT DATE: $$DATE$$

SHEET 2 OF 2
DETAILS OF END BENT 1

ROUTE SECTION

ARKANSAS STATE HIGHWAY COMMISSION
LITTLE ROCK, ARKANSAS

DRAWN BY:	JPC	DATE:	05/2020	FILENAME:	b040781_b12.dgn
CHECKED BY:	CJF	DATE:	06/2020		
DESIGNED BY:	JPC	DATE:	05/2020	SCALE:	As Shown
BRIDGE NO.	07501			DRAWING NO.	61945

DATE REVISED	DATE FILMED	DATE REVISED	DATE FILMED	FED.RD. DIST.NO.	STATE	FED.AID PROJ.NO.	SHEET NO.	TOTAL SHEETS
				6	ARK.			
				JOB NO.		040781	67	115
				(1) 07501	- INTERMEDIATE BENT 2 -			61946

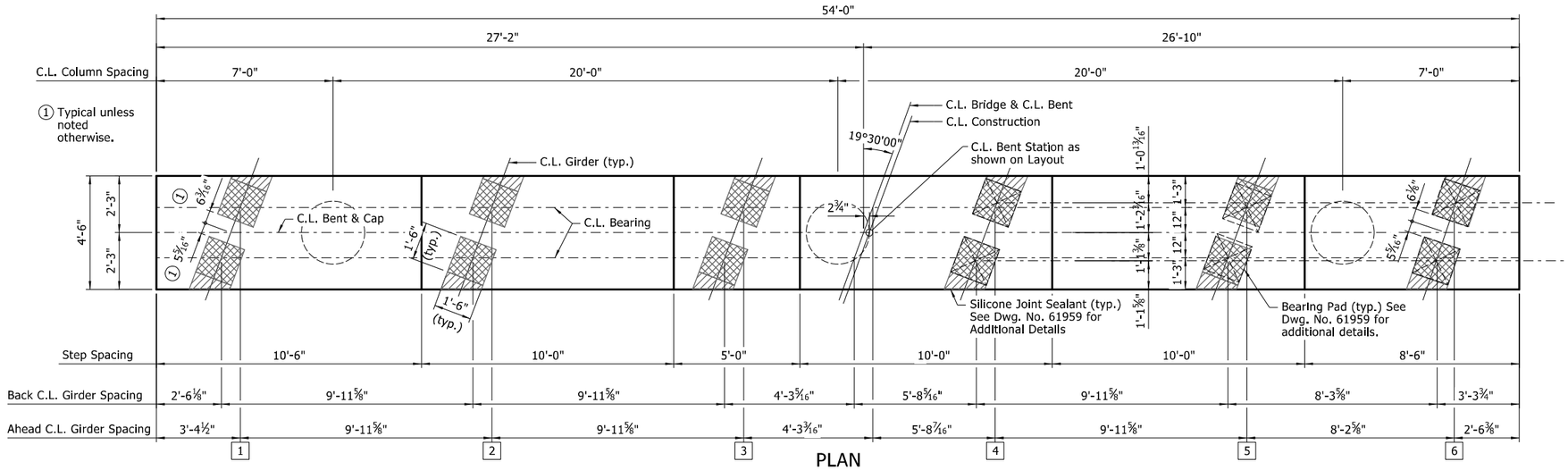

PLAN

BAR LIST

MARK	NO. REQ'D	LENGTH	PIN. DIA.
B401	46	8'-0"	2"
B402	8	28'-2"	Str.
B403E	94	4'-9"	Str.
B501	76	15'-2"	2½"
B502	12	10'-4"	2½"
B503	10	53'-8"	Str.
B901	8	53'-8"	Str.
B1001	8	56'-6"	10"
C501	57	8'-0"	3¾"
C701	42	17'-8"	Str.
F701	126	12'-2"	5¼"
F702	42	7'-2"	5¼"
F703	66	10'-6"	Str.

BENDING DIAGRAMS

Notes:
Dimensions of bars are out-to-out.
All bars designated with an "E" suffix are to be epoxy coated.

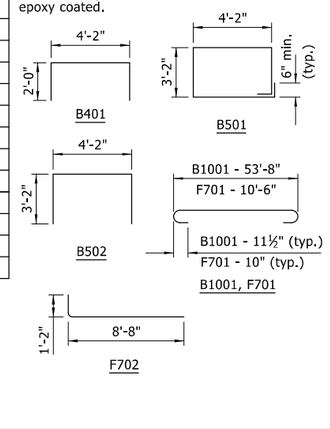

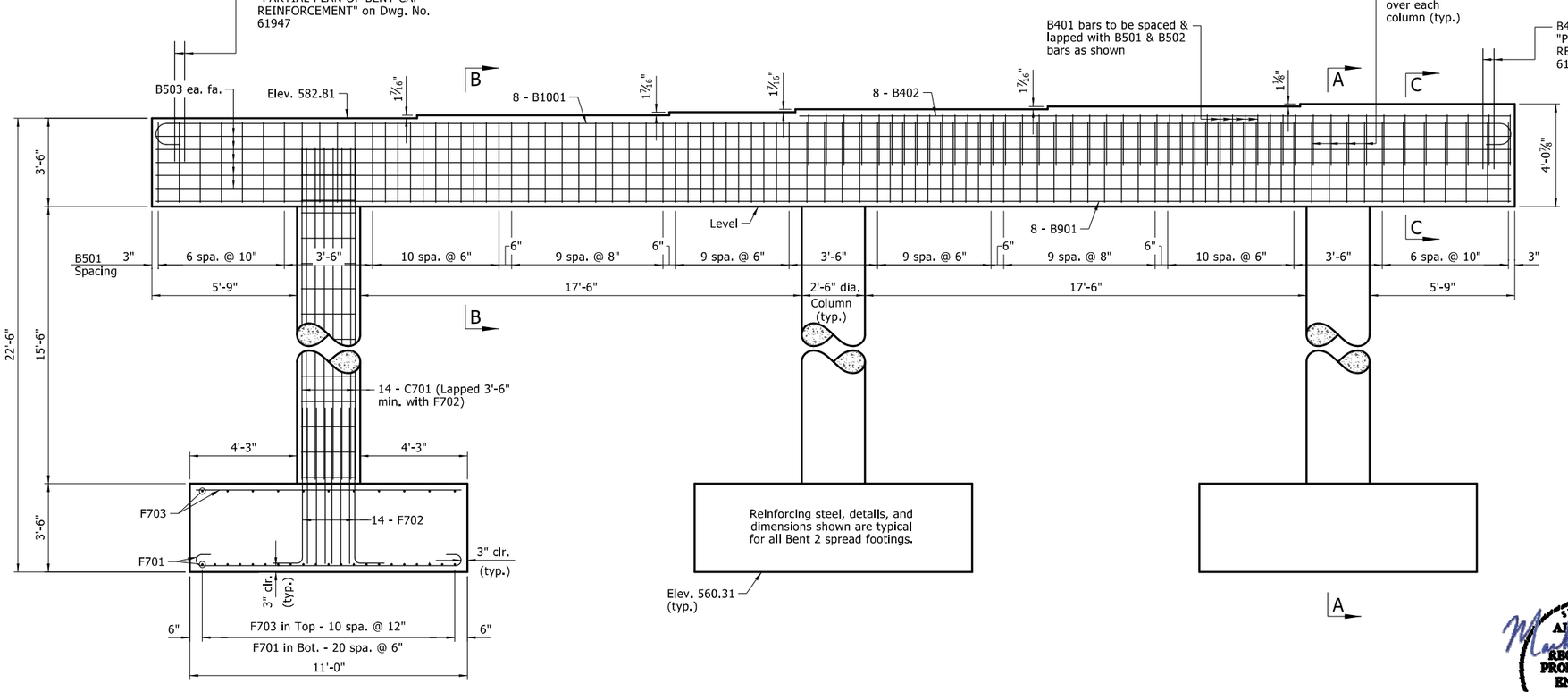

ELEVATION

Looking Ahead

GENERAL NOTES

Unless otherwise noted, concrete in caps shall be Class S with a minimum 28 day compressive strength f'c = 3,500 and shall be poured in the dry.

All exposed corners shall be chamfered ¾" unless otherwise noted.

All reinforcing steel shall be Grade 60 (yield strength = 60,000 psi) conforming to AASHTO M 31 or M 322, Type A, with mill test reports.

See Dwg. No. 61947 for "SECTION A-A", "SECTION B-B", and "SECTION C-C".

For additional information, see Layout.

STATE OF ARKANSAS REGISTERED PROFESSIONAL ENGINEER No. 8940 MARK ASHER

12/12/2023

BRIDGE ENGINEER
PRINT DATE: $$DATE$$

SHEET 1 OF 2
DETAILS OF INTERMEDIATE BENT 2
ROUTE SECTION
ARKANSAS STATE HIGHWAY COMMISSION
LITTLE ROCK, ARKANSAS

DRAWN BY:	JPC	DATE:	05/2020	FILENAME:	b040781_b21.dgn
CHECKED BY:	VKN	DATE:	06/2020		
DESIGNED BY:	JPC	DATE:	05/2020	SCALE:	⅜" = 1'-0"
BRIDGE NO.	07501			DRAWING NO.	61946

Notes:
Cap reinforcement omitted in 'SECTION A-A" for clarity.

See Dwg. No. 61946 for "GENERAL NOTES" and "BAR LIST"

DATE REVISED	DATE FILMED	DATE REVISED	DATE FILMED	FED.RD. DIST.NO.	STATE	FED.AID PROJ.NO.	SHEET NO.	TOTAL SHEETS
				6	ARK.			
				JOB NO.		040781	68	115
				07501	- INTERMEDIATE BENT 2 -			61947

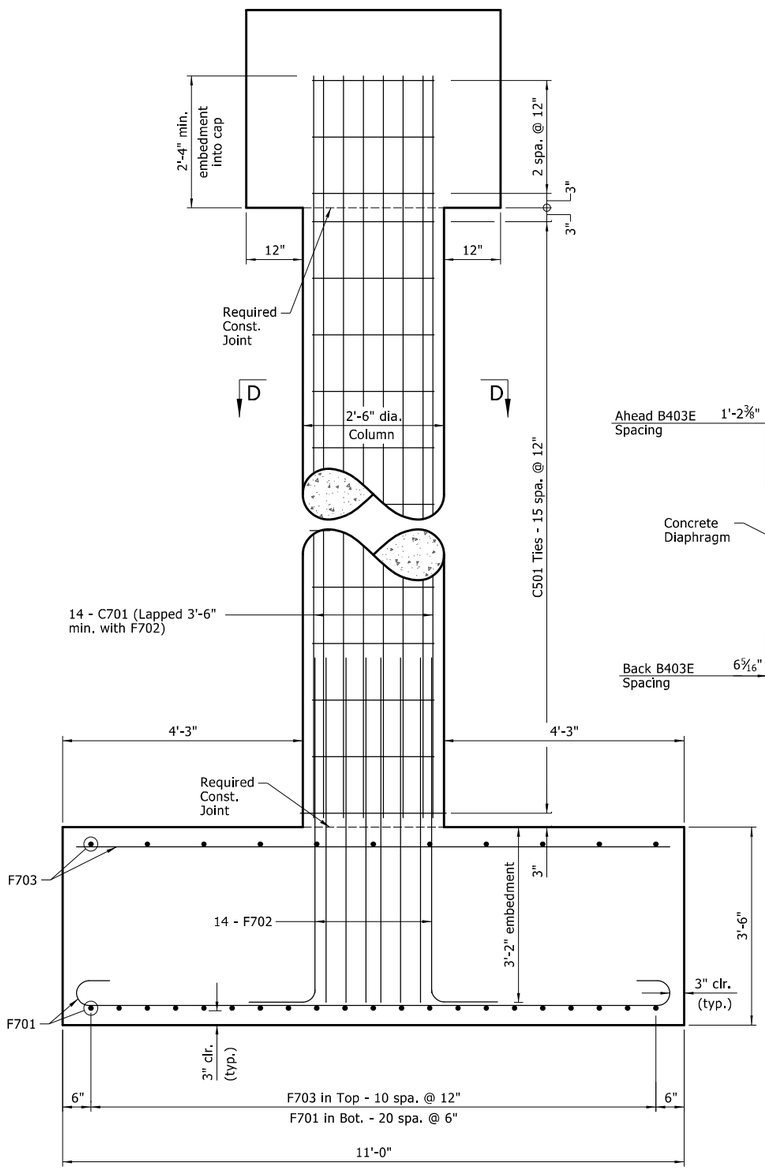

SECTION A-A
¾" = 1'-0"

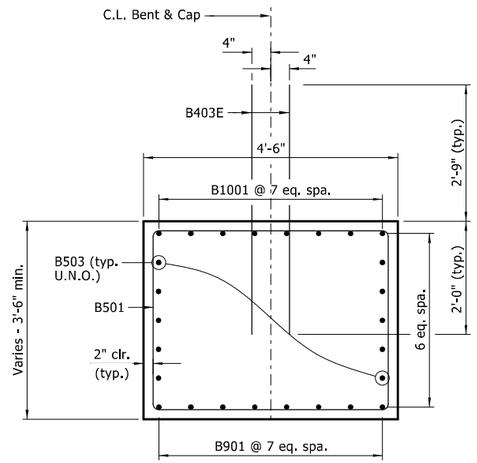

SECTION B-B
¾" = 1'-0"

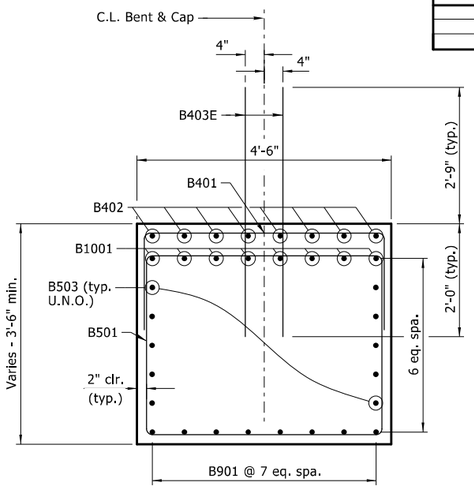

SECTION C-C
¾" = 1'-0"

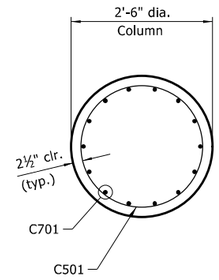

SECTION D-D
¾" = 1'-0"

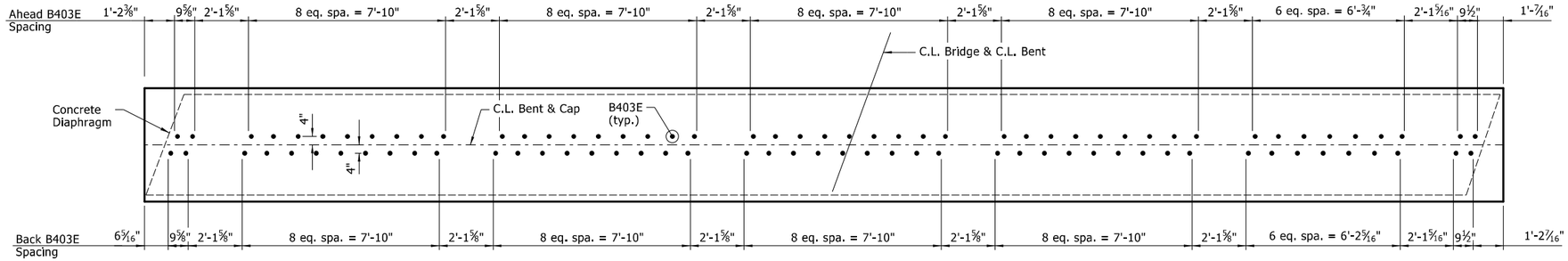

Note:
B403E dowels are spaced to match D416E spacing in Diaphragm. See Dwg. No. 61952 for additional details.

PARTIAL PLAN OF BENT CAP REINFORCING
⅜" = 1'-0"

STATE OF ARKANSAS
REGISTERED PROFESSIONAL ENGINEER
No. 8940
MARK ASHER

12/12/2023

BRIDGE ENGINEER
PRINT DATE: $$DATE$$

SHEET 2 OF 2
DETAILS OF INTERMEDIATE BENT 2
ROUTE SECTION
ARKANSAS STATE HIGHWAY COMMISSION
LITTLE ROCK, ARKANSAS

DRAWN BY:	JPC	DATE:	05/2020	FILENAME:	b040781_b22.dgn
CHECKED BY:	VKN	DATE:	06/2020		
DESIGNED BY:	JPC	DATE:	05/2020	SCALE:	As Shown
BRIDGE NO.	07501			DRAWING NO.	61947

DATE REVISED	DATE FILMED	DATE REVISED	DATE FILMED	FED.RD. DIST.NO.	STATE	FED.AID PROJ.NO.	SHEET NO.	TOTAL SHEETS
				6	ARK.			
				JOB NO.		040781	69	115

(1) 07501 - INTERMEDIATE BENT 3 - 61948

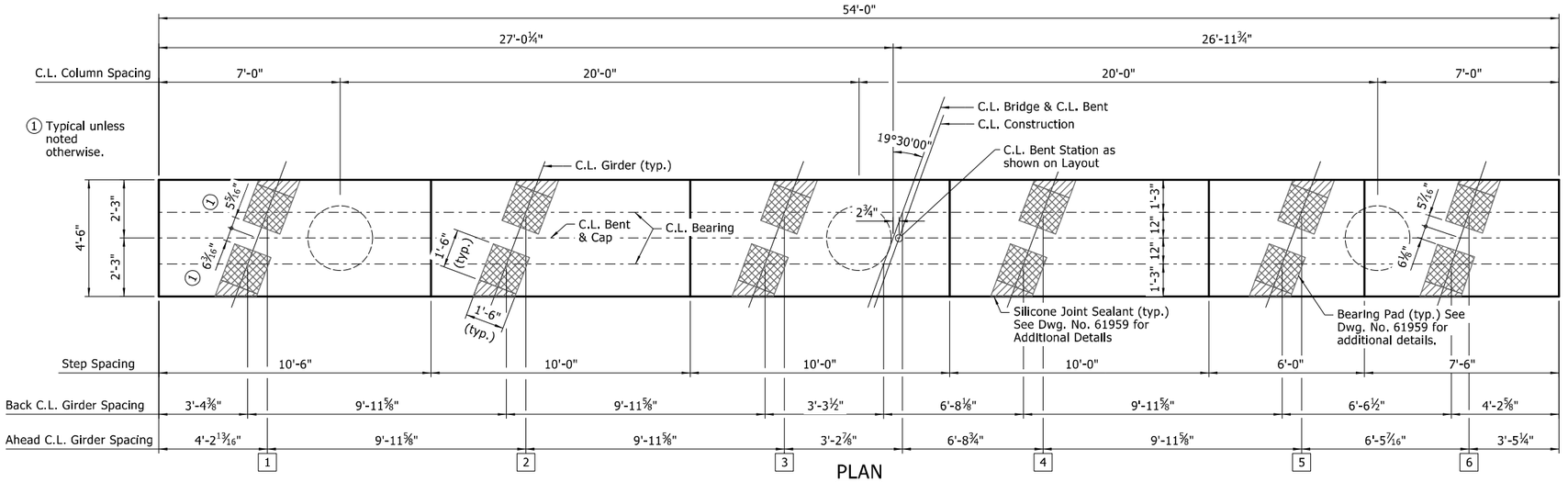

PLAN

BAR LIST

MARK	NO. REQ'D	LENGTH	PIN. DIA.
B401	38	8'-0"	2"
B402	8	23'-4"	Str.
B403E	92	4'-9"	Str.
B501	76	15'-2"	2½"
B502	12	10'-4"	2½"
B503	10	53'-8"	Str.
B901	8	53'-8"	Str.
B1001	8	56'-6"	10"
C501	57	8'-0"	3¾"
C701	42	16'-8"	Str.
F701	126	12'-2"	5¼"
F702	42	7'-2"	5¼"
F703	66	10'-6"	Str.

BENDING DIAGRAMS

Notes:
Dimensions of bars are out-to-out.
All bars designated with an "E" suffix are to be epoxy coated.

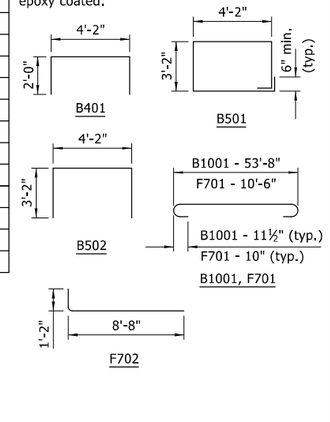

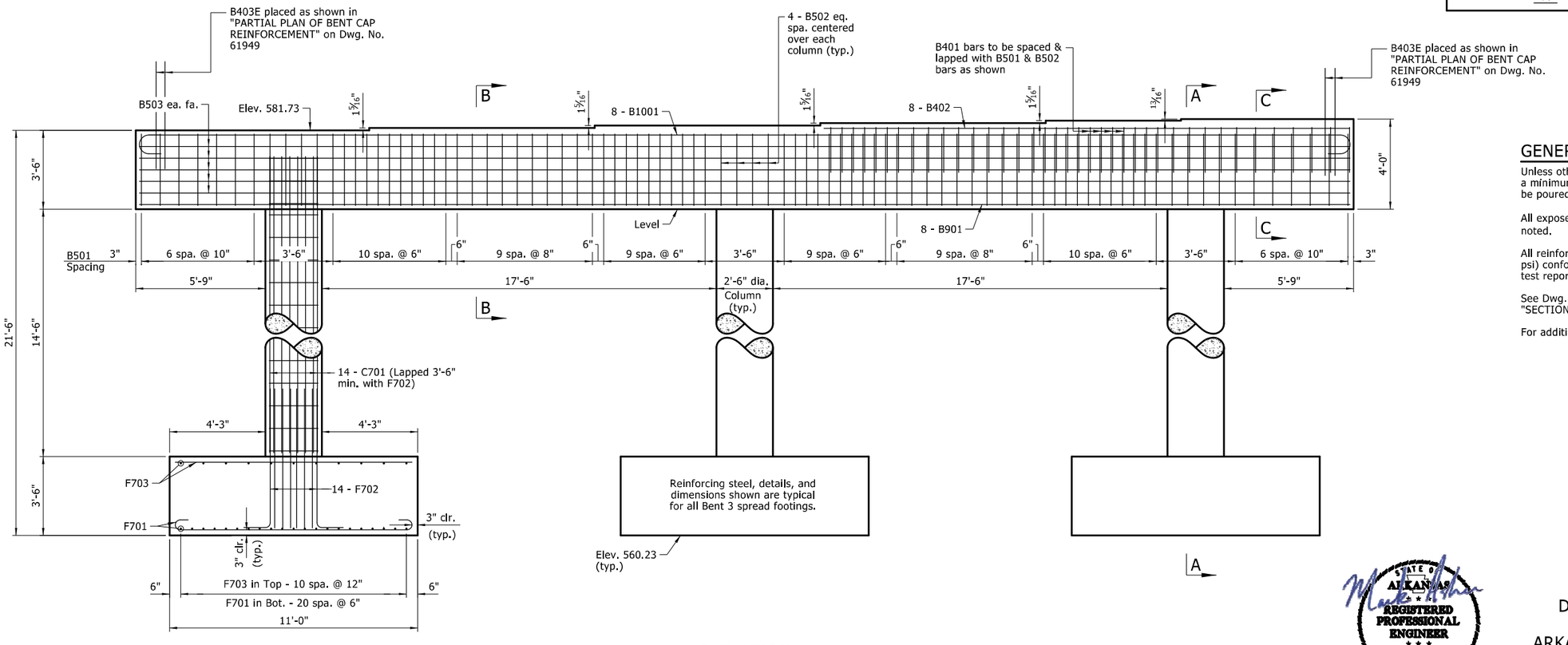

ELEVATION
Looking Ahead

GENERAL NOTES

Unless otherwise noted, concrete in caps shall be Class S with a minimum 28 day compressive strength f'c = 3,500 and shall be poured in the dry.

All exposed corners shall be chamfered ¾" unless otherwise noted.

All reinforcing steel shall be Grade 60 (yield strength = 60,000 psi) conforming to AASHTO M 31 or M 322, Type A, with mill test reports.

See Dwg. No. 61949 for "SECTION A-A", "SECTION B-B", and "SECTION C-C".

For additional information, see Layout.

STATE OF ARKANSAS
REGISTERED PROFESSIONAL ENGINEER
No. 8940
MARK ASHER

12/12/2023

BRIDGE ENGINEER
PRINT DATE: $$DATE$$

SHEET 1 OF 2
DETAILS OF INTERMEDIATE BENT 3
ROUTE SECTION
ARKANSAS STATE HIGHWAY COMMISSION
LITTLE ROCK, ARKANSAS

DRAWN BY:	JPC	DATE:	05/2020	FILENAME:	b040781_b31.dgn
CHECKED BY:	VKN	DATE:	06/2020		
DESIGNED BY:	JPC	DATE:	05/2020	SCALE:	⅜" = 1'-0"
BRIDGE NO.	07501			DRAWING NO.	61948

Notes:
Cap reinforcement omitted in 'SECTION A-A" for clarity.

See Dwg. No. 61948 for "GENERAL NOTES" and "BAR LIST"

DATE REVISED	DATE FILMED	DATE REVISED	DATE FILMED	FED.RD. DIST.NO.	STATE	FED.AID PROJ.NO.	SHEET NO.	TOTAL SHEETS
				6	ARK.			
				JOB NO.		040781	70	115

(1) 07501 - INTERMEDIATE BENT 3 - 61949

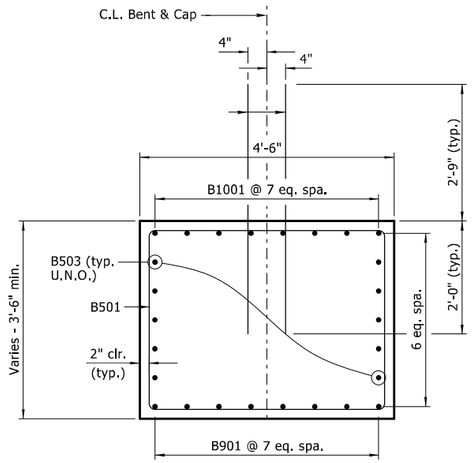

SECTION B-B
¾" = 1'-0"

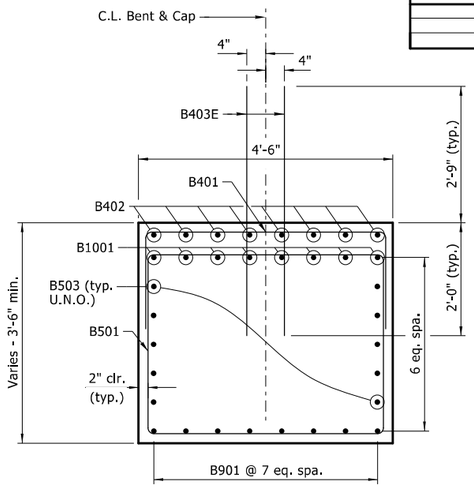

SECTION C-C
¾" = 1'-0"

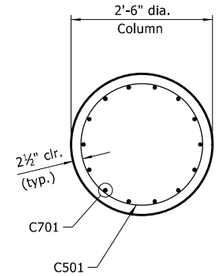

SECTION D-D
¾" = 1'-0"

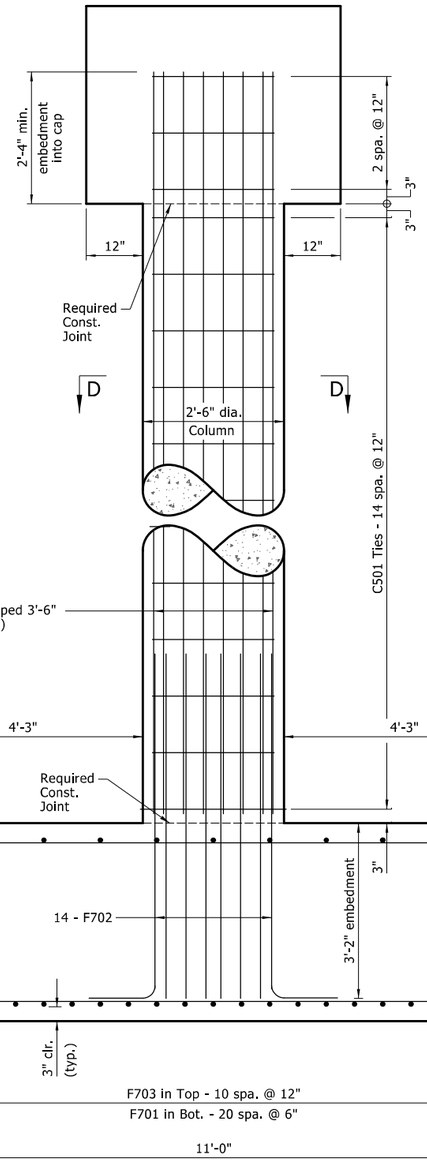

SECTION A-A
¾" = 1'-0"

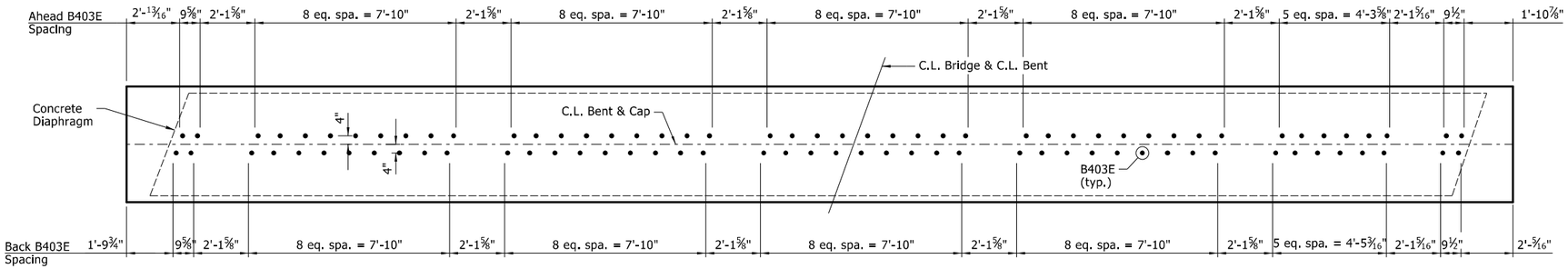

Note:
B403E dowels are spaced to match D416E spacing in Diaphragm. See Dwg. No. 61952 for additional details.

PARTIAL PLAN OF BENT CAP REINFORCING
⅜" = 1'-0"

STATE OF ARKANSAS REGISTERED PROFESSIONAL ENGINEER No. 8940 MARK ASHER

12/12/2023

BRIDGE ENGINEER
PRINT DATE: $$DATE$$

SHEET 2 OF 2
DETAILS OF INTERMEDIATE BENT 3
ROUTE SECTION
ARKANSAS STATE HIGHWAY COMMISSION
LITTLE ROCK, ARKANSAS

DRAWN BY:	JPC	DATE:	05/2020	FILENAME:	b040781_b32.dgn
CHECKED BY:	VKN	DATE:	06/2020		
DESIGNED BY:	JPC	DATE:	05/2020	SCALE:	As Shown
BRIDGE NO.	07501			DRAWING NO.	61949

DATE REVISED	DATE FILMED	DATE REVISED	DATE FILMED	FED.RD. DIST.NO.	STATE	FED.AID PROJ.NO.	SHEET NO.	TOTAL SHEETS
				6	ARK.			
				JOB NO.		040781	71	115
				1 07501		- END BENT 4 -		61950

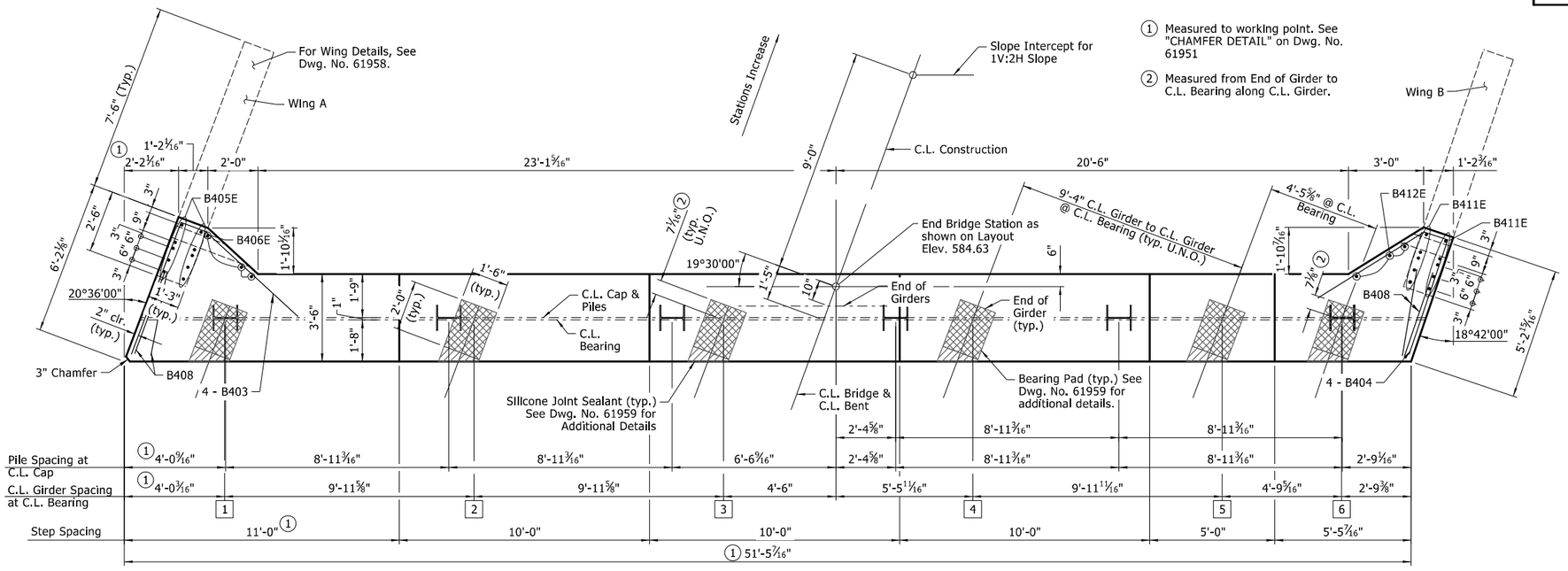

PLAN

⅜" = 1'-0"

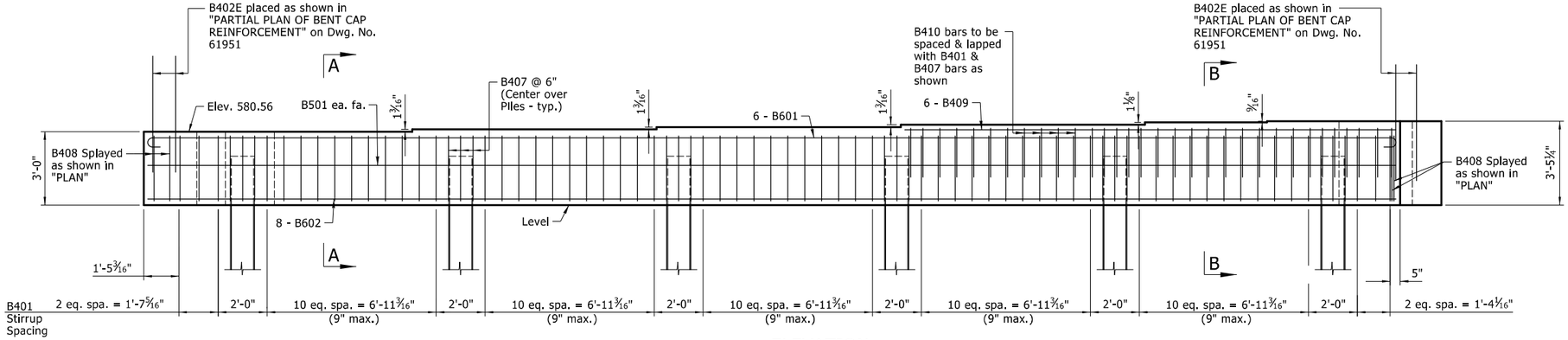

ELEVATION

⅜" = 1'-0"
Looking Ahead

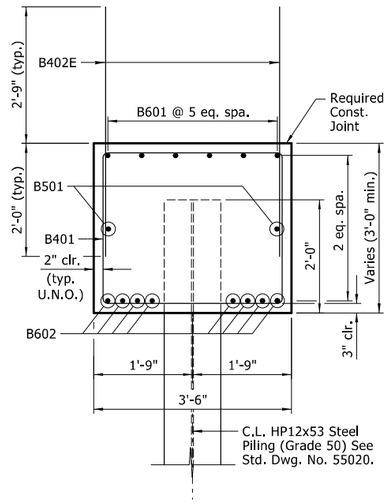

SECTION A-A

¾" = 1'-0"

Notes:
B402E bars shall have a 2'-0" embedment into the end bent cap. B405E, B406E, B411E, & B412E bars shall have a 2'-9" embedment into the end bent cap.

See Dwg. No. 61951 for "SECTION B-B".

GENERAL NOTES

CONCRETE:
Unless otherwise noted, concrete in caps shall be Class S with a minimum 28 day compressive strength f'c = 3,500 and shall be poured in the dry.

All exposed corners shall be chamfered ¾" unless otherwise noted.

REINFORCING STEEL:
All reinforcing steel shall be Grade 60 (yield strength = 60,000 psi) conforming to AASHTO M 31 or M 322, Type A, with mill test reports.

Granular Backfill and Pipe Underdrain required behind Bent; See Dwg. No. 61959.

STATE OF ARKANSAS REGISTERED PROFESSIONAL ENGINEER No. 8940 MARK ASHER

12/12/2023

BRIDGE ENGINEER
PRINT DATE: $$DATE$$

SHEET 1 OF 2
DETAILS OF END BENT 4
ROUTE SECTION
ARKANSAS STATE HIGHWAY COMMISSION
LITTLE ROCK, ARKANSAS

DRAWN BY: JPC DATE: 05/2020 FILENAME: b040781_b41.dgn
CHECKED BY: CJF DATE: 06/2020
DESIGNED BY: JPC DATE: 05/2020 SCALE: As Shown
BRIDGE NO. 07501 DRAWING NO. 61950

DATE REVISED	DATE FILMED	DATE REVISED	DATE FILMED	FED.RD. DIST.NO.	STATE	FED.AID PROJ.NO.	SHEET NO.	TOTAL SHEETS
				6	ARK.			
				JOB NO.		040781	72	115
				07501		- END BENT 4 -		61951

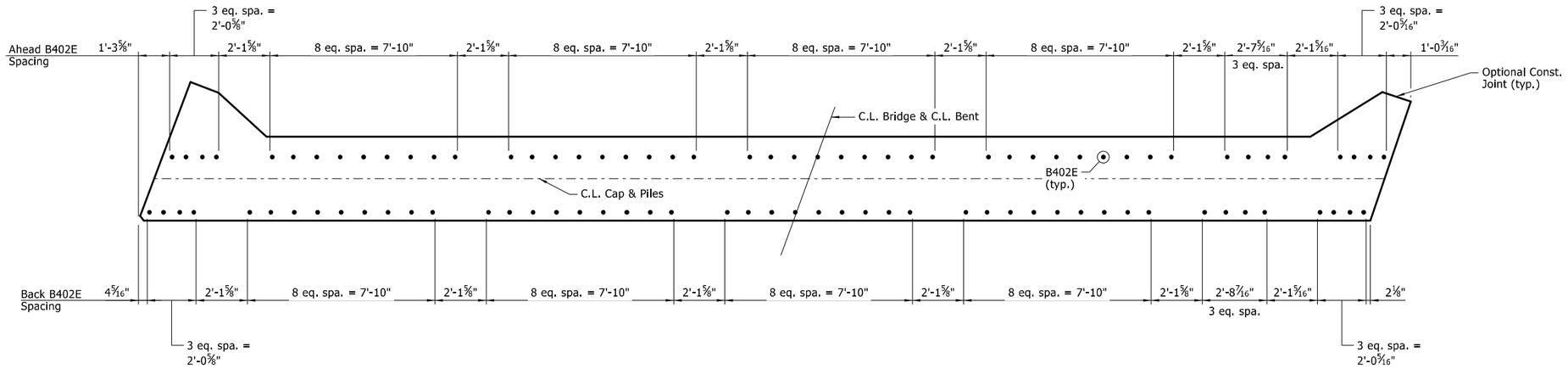

PARTIAL PLAN OF BENT CAP REINFORCING

⅜" = 1'-0"

BAR LIST

MARK	NO. REQ'D	LENGTH	PIN. DIA.
B401	61	11'-10"	2"
B402E	96	4'-9"	Str.
B403	4	11'-6"	3"
B404	4	10'-9"	3"
B405E	10	6'-8"	Str.
B406E	3	5'-6"	Str.
B407	18	8'-2"	2"
B408	4	12'-6"	2"
B409	6	20'-2"	Str.
B410	32	7'-0"	2"
B411E	10	7'-1"	Str.
B412E	3	5'-11"	Str.
B501	2	51'-1"	Str.
B601	6	52'-5"	4½"
B602	8	51'-1"	Str.

BENDING DIAGRAMS

Note:
Dimensions of bars are out-to-out.
All bars designated with an "E" suffix are to be epoxy coated.

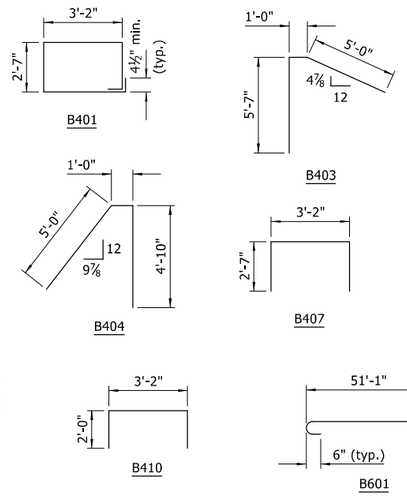

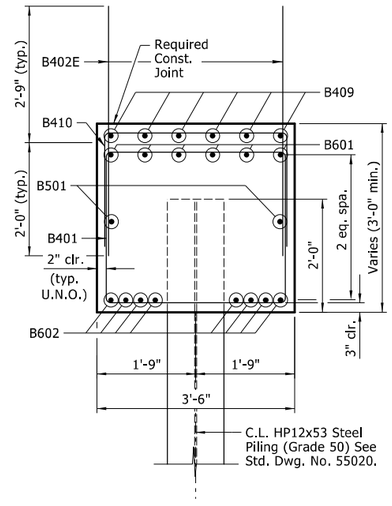

SECTION B-B

¾" = 1'-0"

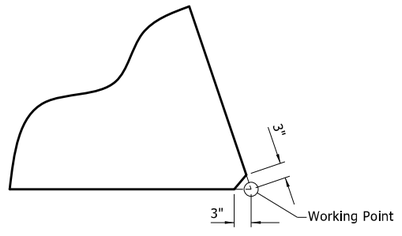

CHAMFER DETAIL

1" = 1'-0"

STATE OF ARKANSAS
REGISTERED PROFESSIONAL ENGINEER
No. 8940
MARK ASHER

12/12/2023

BRIDGE ENGINEER
PRINT DATE: $$DATE$$

DRAWN BY: JPC DATE: 05/2020
CHECKED BY: CJF DATE: 06/2020
DESIGNED BY: JPC DATE: 05/2020
BRIDGE NO. 07501
FILENAME: b040781_b42.dgn
SCALE: As Shown
DRAWING NO. 61951

SHEET 2 OF 2
DETAILS OF END BENT 4
ROUTE SECTION
ARKANSAS STATE HIGHWAY COMMISSION
LITTLE ROCK, ARKANSAS

DATE REVISED	DATE FILMED	DATE REVISED	DATE FILMED	FED.RD. DIST.NO.	STATE	FED.AID PROJ.NO.	SHEET NO.	TOTAL SHEETS
				6	ARK.			
				JOB NO.		040781	73	115
				(1) 07501		- 147'-10⅜" UNIT -		61952

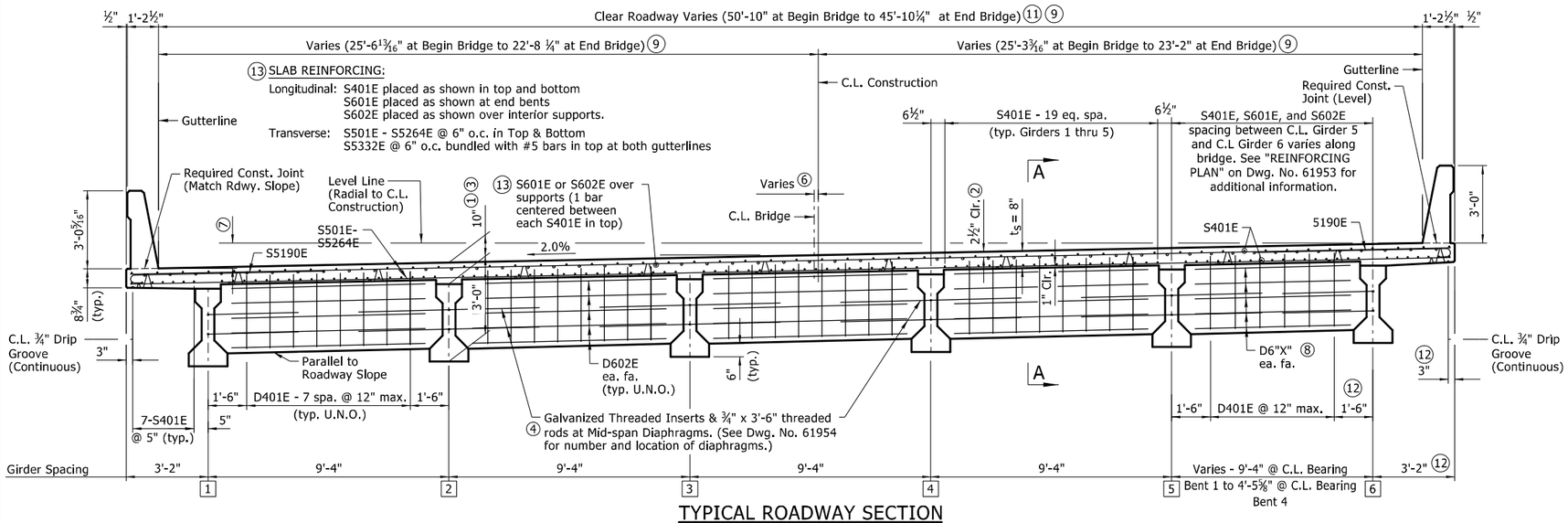

TYPICAL ROADWAY SECTION

Looking Ahead
⅜" = 1'-0"

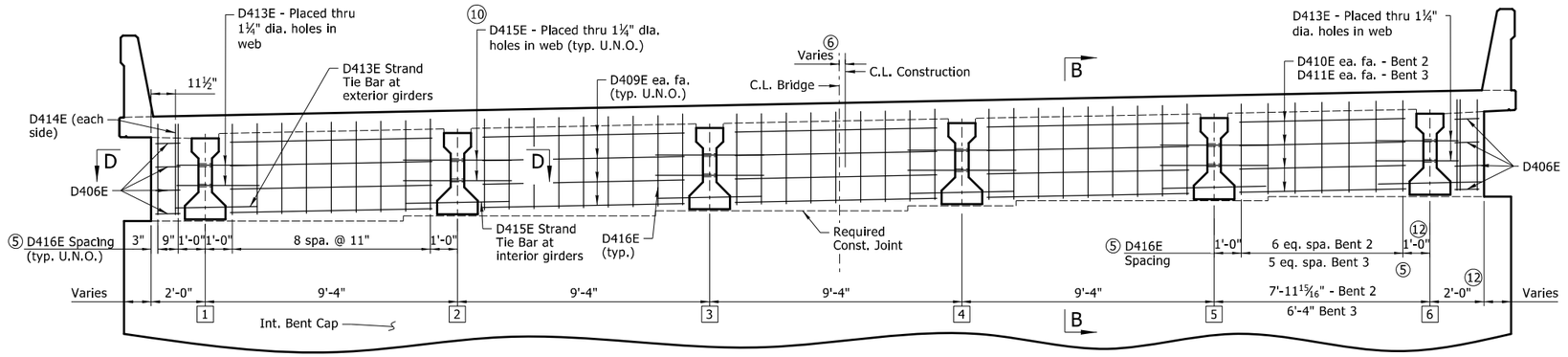

TYPICAL ROADWAY SECTION AT INTERMEDIATE BENTS

Looking Ahead
(Shown at Bent 2, similar at Bent 3)
⅜" = 1'-0"

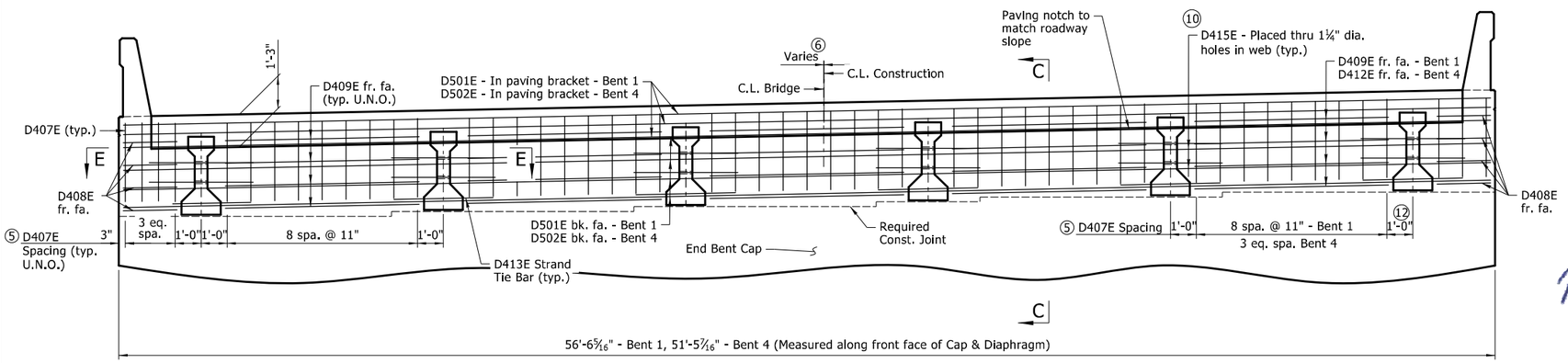

TYPICAL ROADWAY SECTION AT ENDS OF UNIT

Looking Ahead
(Shown at C.L. Bearing Bent 1, similar at Bent 4)
⅜" = 1'-0"

Notes:
Horizontal dimensions are measured perpendicular to Left Edge of Bridge unless noted otherwise.

Bar positions or clearances from the forms shall be maintained by means of stays, ties, hangers or other approved devices per Subsection 804.06. Placement of slab bolsters or hi-chairs with full length lower runners directly on removable deck forms will not be allowed.

Class 2 Protective Surface Treatment shall be applied to the Roadway Surface and the Face and Top of Concrete Parapet Rail.

The superstructure details shown are for use when removable deck forming is used and are the basis for measurement of Class S(AE) Concrete.

(1) See "ADJUSTMENT FOR SLAB THICKNESS TOLERANCE", Dwg. No. 61959.

(2) Tolerance: Minus = ¼"; Plus equal the amount of slab thickening used to meet slab thickness tolerance. See "ADJUSTMENT FOR SLAB THICKNESS TOLERANCE", Dwg. No. 61959.

(3) This dimension taken at C.L. Bearing & C.L. Girder.

(4) Galvanized Threaded Inserts shall be Dayton-Richmond F-42 Loop Ferule Inserts or approved equal. ¾" ϕ Galvanized Threaded Rods shall be ASTM A709, Grade 36 or AASHTO M 31 or M 322 Type A, Grade 60. Galvanizing shall be in accordance with AASHTO M 232 Class C. These items will not be paid for directly, but shall be considered subsidiary to the Item "Prestressed Concrete Girders (Type II)."

(5) Space with B402E and B403E bars as shown in "PARTIAL PLAN OF BENT CAP REINFORCING" on Dwg. Nos. 61945, 61947, 61949, and 61951.

(6) Varies from 0" at Begin Bridge to 2 15/16" at Sta. 115+40.23 to 0" at End Bridge.

(7) Varies from 12¼" at Begin Bridge to 11" at End Bridge.

(8) Diaphragm Length varies along bridge between C.L. Girder 5 and C.L. Girder 6. See "FRAMING PLAN" and "TABLE OF MID-SPAN CONCRETE DIAPHRAGM VARIABLES" on Dwg. No. 61954 for bar designations and Diaphragm Lengths.

(9) Measured radial to C.L. Construction.

(10) Bars shall be centered about the girders.

(11) Turn lane varies from 12'-0" at Sta. 114+15.00 to 0'-0" at Sta. 117+75.00.

(12) Measured perpendicular to Right Edge of Bridge

For "SECTION A-A", see Dwg. No. 61954.
For "SECTION B-B", "SECTION C-C", "SECTION D-D", and "SECTION E-E", see Dwg. No. 61959.

See "PARTIAL PLAN OF CONCRETE DIAPHRAGM REINFORCING" on Dwg. Nos. 61960 and 61961 for additional information.

(13) See "REINFORCING PLAN" on Dwg. No. 61953 for additional information.

STATE OF ARKANSAS
REGISTERED PROFESSIONAL ENGINEER
No. 8940
MARK ASHER

12/12/2023

BRIDGE ENGINEER
PRINT DATE: $$DATE$$

SHEET 1 OF 10
DETAILS OF 147'-10⅜" INTEGRAL PRESTRESSED CONCRETE GIRDER UNIT

ROUTE SECTION

ARKANSAS STATE HIGHWAY COMMISSION
LITTLE ROCK, ARKANSAS

DRAWN BY:	JPC	DATE:	05/2020	FILENAME:	b040781_s1.dgn
CHECKED BY:	RDR	DATE:	06/2020		
DESIGNED BY:	JPC	DATE:	05/2020	SCALE:	As Shown
BRIDGE NO.	07501			DRAWING NO.	61952

DATE REVISED	DATE FILMED	DATE REVISED	DATE FILMED	FED.RD. DIST.NO.	STATE	FED.AID PROJ.NO.	SHEET NO.	TOTAL SHEETS
				6	ARK.			
				JOB NO.		040781	74	115
				(1) 07501		- 147'-10⅜" UNIT -		61953

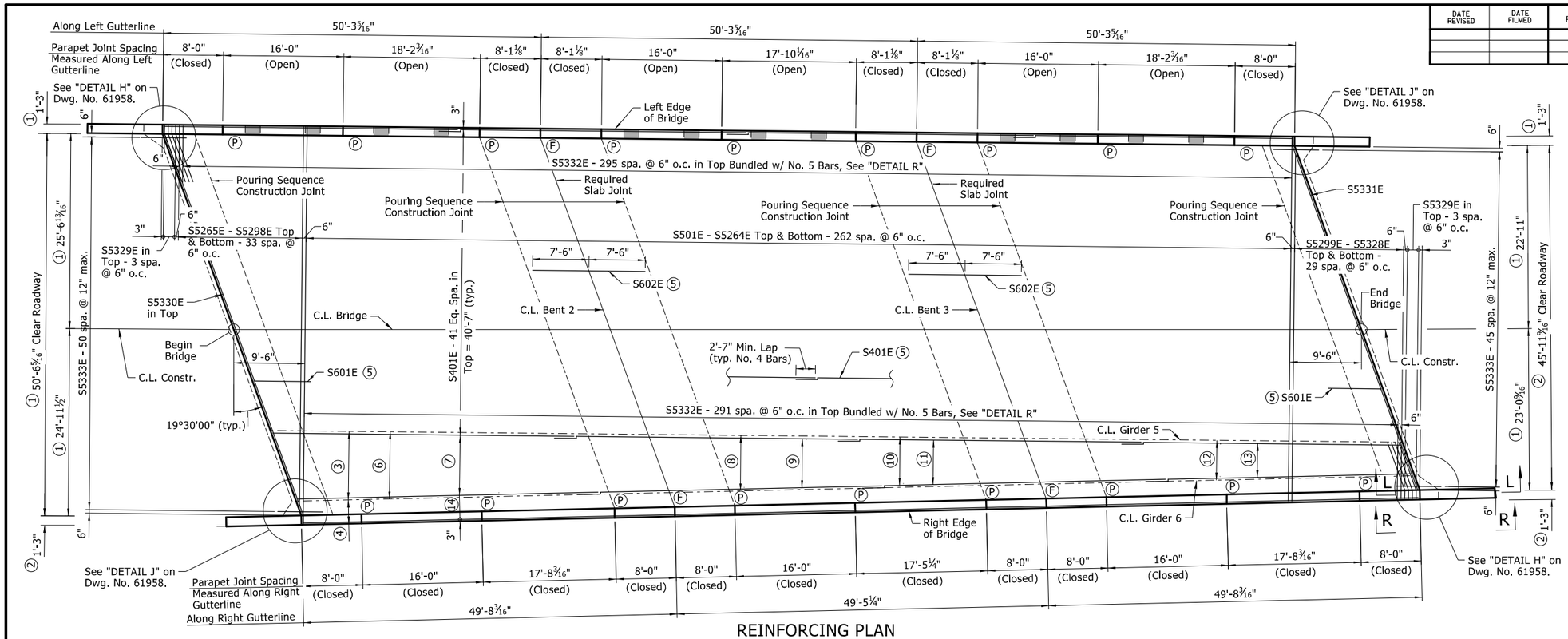

REINFORCING PLAN

⅛" = 1'-0"

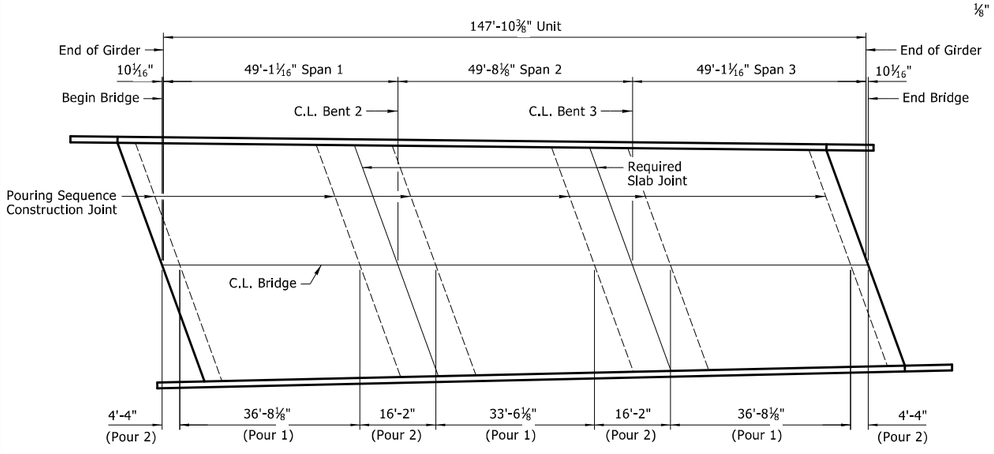

SLAB POURING SEQUENCE

Dimensions measured along C.L. Bridge
No Scale

Slab Pouring Sequence Notes:
Pours with the same number may be be placed simultaneously or separately. All Pours (1) must be placed before Pours (2) can be placed. 48 hours shall elapse between the end of a pour and the start of the next pour. 72 hours shall elapse between adjacent pours. No deviations from the pouring sequence shown will be allowed.

Concrete in bridge superstructure shall be placed, consolidated and screeded off for the entire pour before any concrete has taken its initial set. This may require the use of a retarding agent.

The concrete diaphragms shall not be poured prior to 90 days after release of strands for the girders.

Concrete diaphragms at end bents and intermediate bents shall be poured monolithically with the deck above the diaphragm. Concrete diaphragms at mid-span shall be placed no less than 48 hours prior to the deck slab pour.

A minimum of 72 hours shall elapse between completion of the slab and the pouring of the bridge railing.

Any railing pours made before the entire slab unit has been placed must be approved by the Engineer.

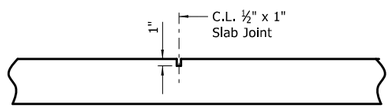

Use ½" x 1" Type 3 or 4 Joint Sealer. See Subsections 501.02 (h) and 501.05 (j). Backer rod shall not be installed. Joint Sealer shall be measured and paid for as Class S(AE) Concrete-Bridge. Slab joints shall extend to the outside edge of the deck slab and shall align with open joints at the front face of parapet, unless noted otherwise. Slab joints shall be installed before the parapet railing is poured. If slab joints are to be sawed, they shall be sawed as soon as the concrete has sufficiently set to allow sawing of the joint without damage to the slab. Slab joints shall be placed at all pouring sequence construction joints and required slab joint locations.

SLAB JOINT DETAIL

No Scale

Notes:
All transverse reinforcement shall be placed perpendicular to Left Edge of Bridge.

Longitudinal Bars shall be placed parallel to the Left Edge of Bridge unless noted otherwise.

(F) Full-Depth parapet Joint at this Location

(P) Partial-Depth parapet Joint at this Location

(1) Measured normal to left gutterline.

(2) Measured normal to right gutterline.

(3) Longitudinal bars in this bay shall be placed varying from parallel to Left Edge of Bridge at C.L. Girder 5 to parallel to Right Edge of Bridge at C.L. Girder 6. Bar spaces shall be measured along lines approximately perpendicular to C.L. Girders.

(4) Longitudinal Bars in the right overhang shall be placed parallel to the Right Edge of Bridge.

(5) Placed as shown in "TYPICAL ROADWAY SECTION" unless noted otherwise on this sheet, see Dwg. No. 61952.

(6) S401E - 19 Eq. Spa. in Bottom of Slab between girder flanges

(7) S401E - 8 Eq. Spa. in Top of Slab.

(8) S401E - 16 Eq. Spa. in Bottom of Slab between girder flanges

(9) S401E - 7 Eq. Spa. in Top of Slab.

(10) S401E - 13 Eq. Spa. in Bottom of Slab between girder flanges

(11) S401E - 6 Eq. Spa. in Top of Slab.

(12) S401E - 11 Eq. Spa. in Bottom of Slab between girder flanges

(13) S401E - 5 Eq. Spa. In Top of Slab.

(14) S401E - 3 Eq. Spa. in Top = 3'-0" (typ.)

Rails and wings are included in span construction and included in span quantities.

Required slab joints and pouring sequence joints shall align with parapet open joints at the gutterline, unless noted otherwise.

For "VIEW R-R" and "SECTION L-L", see Dwg. No. 61958.

For bar list, see Dwg. No. 61957.

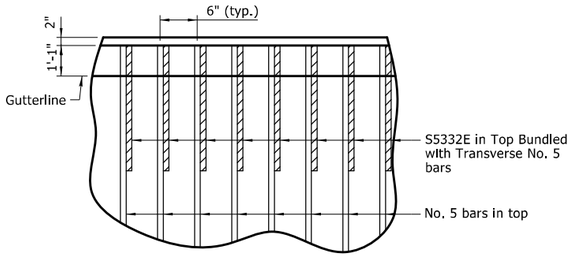

DETAIL R

No Scale

STATE OF ARKANSAS
REGISTERED PROFESSIONAL ENGINEER
No. 8940
MARK ASHER

12/12/2023

BRIDGE ENGINEER
PRINT DATE: $$DATE$$

DRAWN BY: JPC DATE: 05/2020
CHECKED BY: RDR DATE: 06/2020
DESIGNED BY: JPC DATE: 05/2020
BRIDGE NO. 07501
FILENAME: b040781_s2.dgn
SCALE: As Shown
DRAWING NO. 61953

SHEET 2 OF 10
DETAILS OF 147'-10⅜" INTEGRAL PRESTRESSED CONCRETE GIRDER UNIT

ROUTE SECTION

ARKANSAS STATE HIGHWAY COMMISSION
LITTLE ROCK, ARKANSAS

DATE REVISED	DATE FILMED	DATE REVISED	DATE FILMED

FED.RD. DIST.NO.	STATE	FED.AID PROJ.NO.	SHEET NO.	TOTAL SHEETS
6	ARK.			
JOB NO.		040781	75	115
(1) 07501		- 147'-10⅜" UNIT -		61954

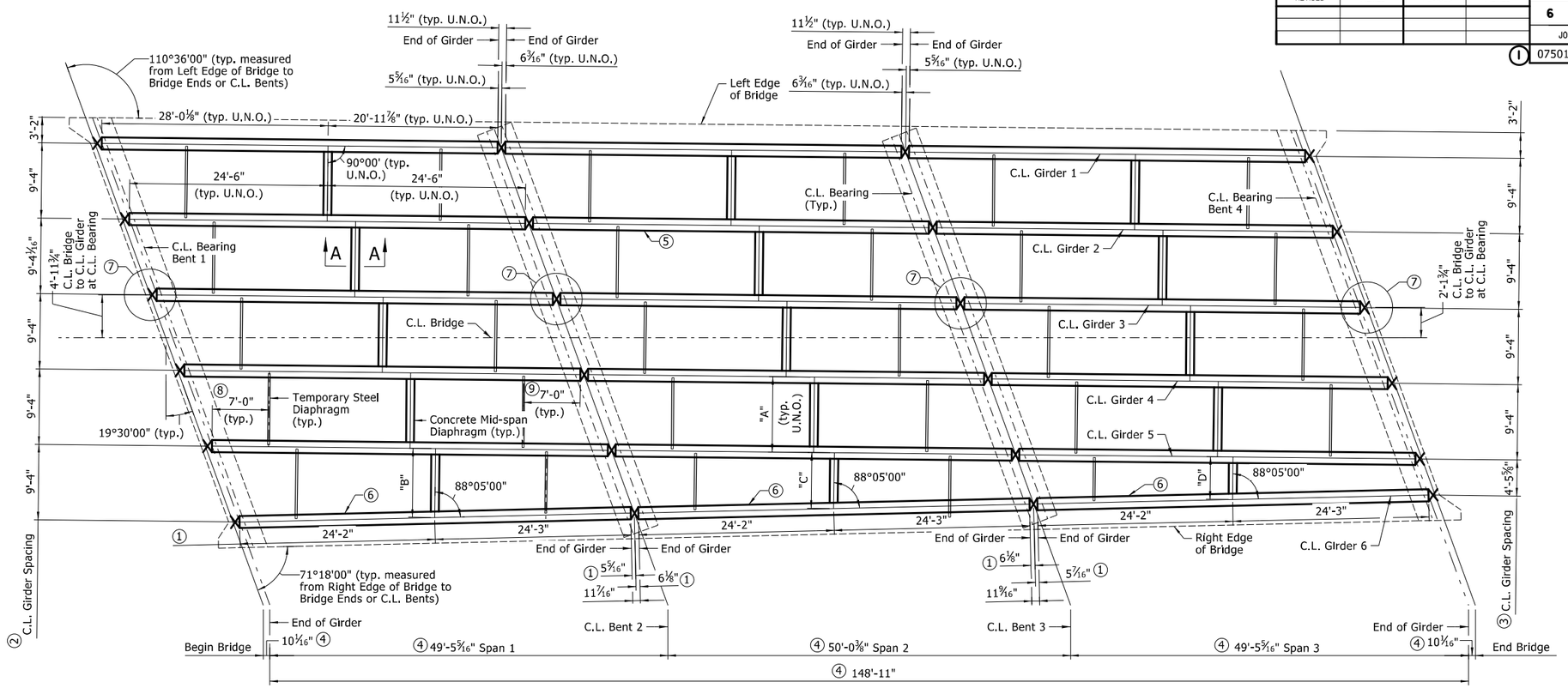

FRAMING PLAN

⅛" = 1'-0"

Notes:
Dimensions are measured parallel to Left Edge of Bridge Unless Noted Otherise.

(1) Measured parallel to Right Edge of Bridge.

(2) Girder Spacing Measured perpendicular to Left Edge of Bridge at C.L. Bearing Bent 1.

(3) Girder Spacing Measured perpendicular to Left Edge of Bridge at C.L. Bearing Bent 4.

(4) Measured along C.L. Girders 1 thru 5.

(5) 49'-0" Type II AASHTO Girder parallel to Left Edge of Bridge (typ. unless noted otherwise).

(6) 48'-5" Type II AASHTO Girder parallel to Right Edge of Bridge.

(7) After erection, the ends of girders at all bents shall be blocked using temporary blocking to maintain proper location on bent caps until all diaphragms are poured or connected.

(8) Measured Along Girder right of Temporary Steel Diaphragm.

(9) Measured Along Girder left of Temporary Steel Diaphragm.

See "STAKING DIAGRAM" for additional information, Dwg. No. 61943.

U.N.O. = Unless Noted Otherwise

TABLE OF MID-SPAN CONCRETE DIAPHRAGM VARIABLES

(10) Diaphragm Length		"X"	D401E Spa.
"A"	9'-4"	02E	7
"B"	8'-6⅜16"	03E	6
"C"	6'-10¹³⁄16"	04E	4
"D"	5'-3⅜16"	05E	3

(10) Measured from C.L. Girder to C.L. Girder perpendicular to Left Edge of Bridge

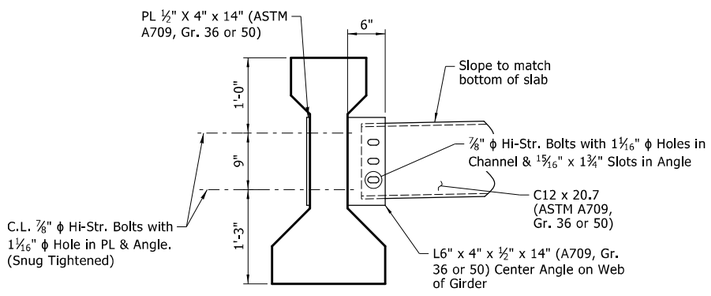

Notes:
Steel diaphragms shall be used at locations noted as "Temporary Steel Diaphragm". Temporary Steel Diaphragms shall be removed upon completion of concrete set in the end bent and intermediate bent diaphragms. After they are removed, holes in webs shall be filled with a QPL approved non-shrink grout and the diaphragms and all connecting components shall remain the property of the Contractor. Temporary Diaphragm considered subsidiary to the item "Prestressed Concrete Girders (Type II)".

A standard washer shall be supplied under both the nut and the head of the ⅞" ϕ Hi-Str. Bolts. An additional plate washer shall cover the angle slots.

Permanent Steel Diaphragms may be used in lieu of a Concrete Diaphragm at midspan. Payment for permanent steel diaphragm and components will be based on concrete diaphragms.

All components of Permanent Steel Diaphragms shall be galvanized in accordance with Section 807.

DETAILS OF STEEL DIAPHRAGM

No Scale

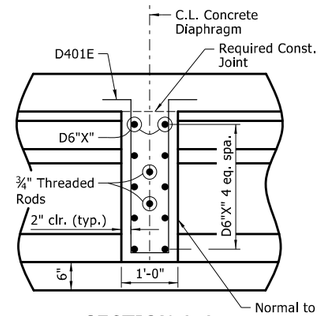

SECTION A-A

Mid-span Diaphragms
No Scale

STATE OF ARKANSAS
REGISTERED PROFESSIONAL ENGINEER
No. 8940
MARK ASHER

12/12/2023

BRIDGE ENGINEER
PRINT DATE: $$DATE$$

SHEET 3 OF 10
DETAILS OF 147'-10⅜" INTEGRAL PRESTRESSED CONCRETE GIRDER UNIT

ROUTE SECTION

ARKANSAS STATE HIGHWAY COMMISSION
LITTLE ROCK, ARKANSAS

DRAWN BY:	JPC	DATE:	04/2020	FILENAME:	b040781_s3.dgn
CHECKED BY:	MJM	DATE:	06/2020		
DESIGNED BY:	JPC	DATE:	04/2020	SCALE:	As Shown
BRIDGE NO.	07501			DRAWING NO.	61954

DATE REVISED	DATE FILMED	DATE REVISED	DATE FILMED	FED.RD. DIST.NO.	STATE	FED.AID PROJ.NO.	SHEET NO.	TOTAL SHEETS
				6	ARK.			
				JOB NO.		040781	76	115
				1 07501		- 147'-10⅜" UNIT -		61955

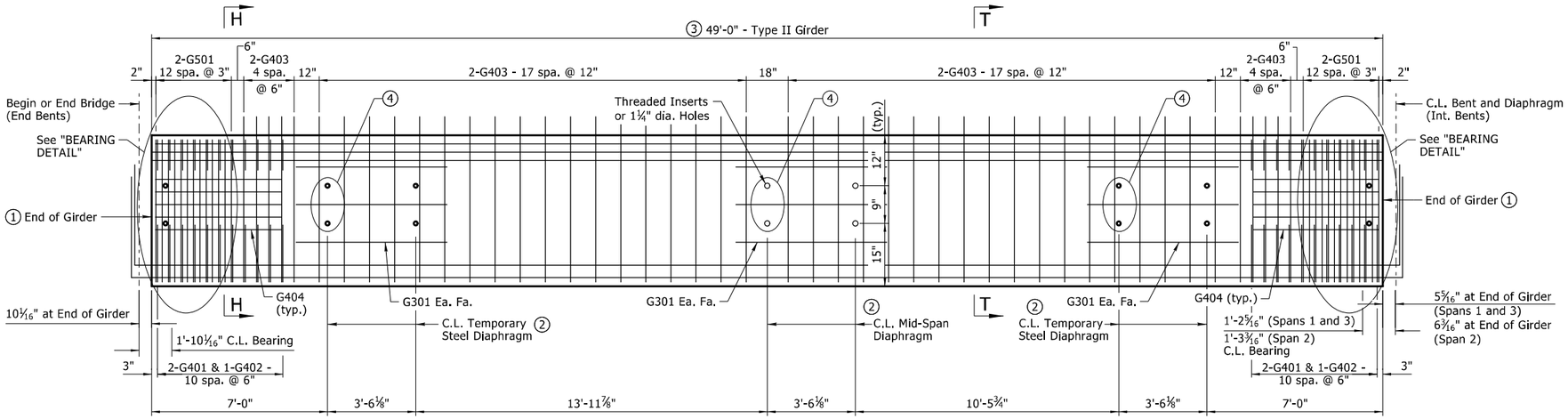

TYPICAL GIRDER ELEVATION (AASHTO TYPE II) - 49'-0"

Dimensions are measured along girders.

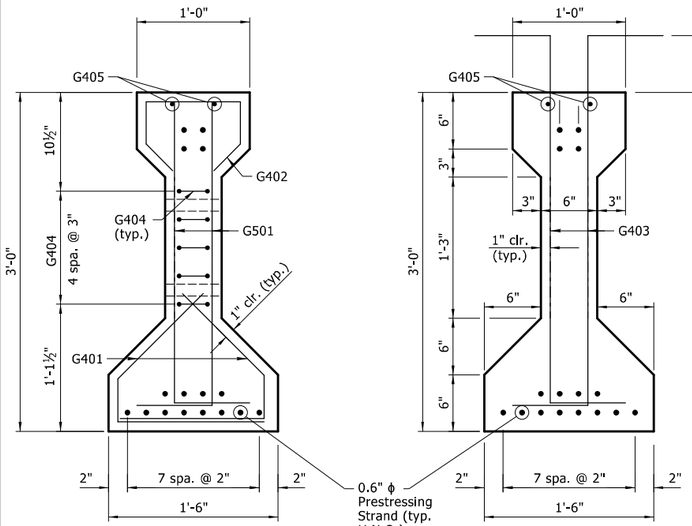

SECTION H-H

SECTION T-T

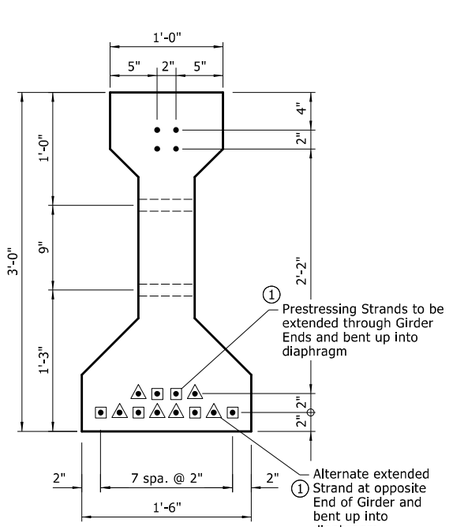

STRAND ARRANGEMENTS

Notes:
Dimensions are measured parallel to C.L. Girders.

Prestressing strands will not be paid for directly, but will be considered subsidiary to the item "Prestressed Concrete Girders (Type II)".

Prestressing strands shall be bonded along the entire length of the girder.

1 Saw and shop bend 6 bottom prestressing strands from each end of the girder into diaphragms as shown. Saw any remaining strands flush with the end of girder. See "Strand Arrangements" detail for alternating patterns.

At the Contractor's option, the location for bent up strands may be varied. The total number of bent - up strands shall not be changed.

2 Holes and Inserts shown are for diaphragms. See Dwg. No. 61954 for additional details.

3 This dimension shall be increased for effects of vertical profile on girder length to maintain 11½" between ends of girders.

4 Threaded Inserts or Holes at these locations shall not be included with girders along C.L. Girder 1. See "FRAMING PLAN" on Dwg. No. 61954 for C.L. Girder 1 Location.

See "FRAMING PLAN" on Dwg. No. 61954 for additional information.

BAR LIST - PER GIRDER

MARK	NO. REQ'D	LENGTH	PIN. DIA.	BENDING DIAGRAMS
G301	18	6'-0"	Str.	Note: Dimensions of bars are out-to-out.
G401	44	2'-7"	2"	
G402	22	2'-0"	2"	
G403	92	4'-5"	3"	
G404	10	10'-1"	2"	
G405	2	48'-8"	Str.	
G501	52	3'-3"	2½"	

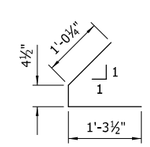

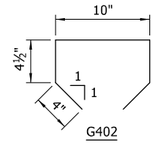

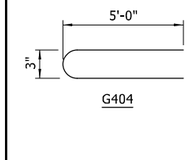

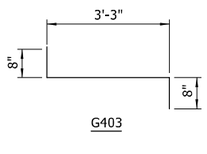

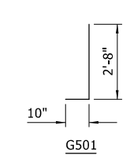

Note:
All bars in BAR LIST shall be subsidiary to the item "Prestressed Concrete Girders (Type II)". See span drawings for bar list of span reinforcing.

At the Contractor's option, the two G401 bars may be furnished as one bar at no additional cost to the department.

CAMBER NOTES

The camber and dead load deflection values shown are estimated based on the required minimum concrete strength for the prestressed concrete girders. The Contractor shall provide the Engineer with the following information:

A. Actual 28-day concrete strength of prestressed concrete girders.
B. Estimated age of prestressed concrete girders at time of erection.
C. Profile of each girder under self weight.
D. Number of days since release of strands of each girder.

Following receipt of the above data, the Engineer will provide an updated camber and deflection diagram to the Contractor, if required.

Span Pt.	Inches	
	W_A	X_A
0.00	0.000	0.000
0.10	0.424	0.352
0.20	0.740	0.708
0.30	0.957	0.989
0.40	1.082	1.170
0.50	1.123	1.232
0.60	1.082	1.170
0.70	0.957	0.987
0.80	0.740	0.705
0.90	0.424	0.349
1.00	0.000	0.000

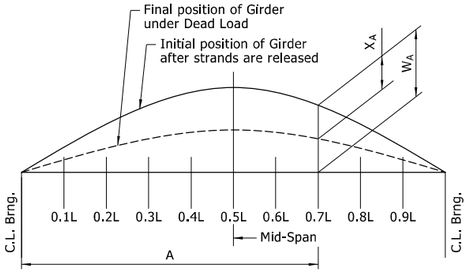

'W_A' is camber of Girder (Prestress + Dead Load of Girder @ 60 days after release)

'X_A' is Dead Load Deflection of Slab + Diaphragms + Composite Dead Load

Note:
'W_A' & 'X_A' are based on the required minimum concrete strength and may vary from the dimension shown. 'W_A' & 'X_A' shall be measured along bottom of girders unless otherwise approved by the Engineer. See "ADJUSTMENT FOR SLAB THICKNESS TOLERANCE" on Dwg. No. 61959 for limitations of the girder final position under dead load. The Contractor is responsible for any adjustment necessary to meet slab thickness tolerance and to achieve an acceptable finished grade. No payment shall be made for any additional concrete in the haunches when camber is less than shown.

CAMBER & DEFLECTIONS (INCHES)

4 10 1/16" at Begin and End Bridge
5 5/16" at End Span 1 and Begin Span 3
6 3/16" at Begin and End Span 2

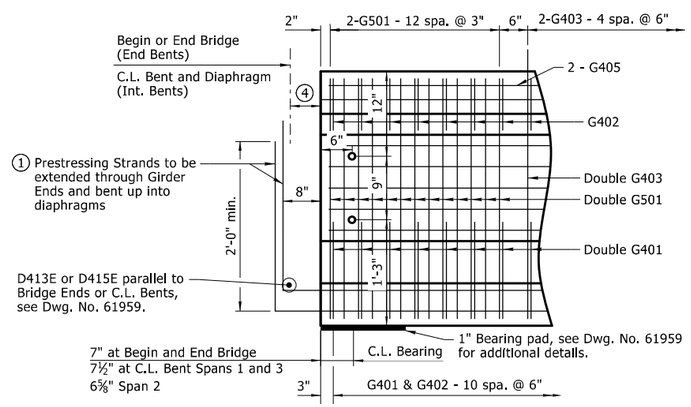

BEARING DETAIL

STATE OF ARKANSAS
REGISTERED PROFESSIONAL ENGINEER
No. 8940
MARK ASHER

12/12/2023

BRIDGE ENGINEER
PRINT DATE: $$DATE$$

SHEET 4 OF 10
DETAILS OF 147'-10⅜" INTEGRAL PRESTRESSED CONCRETE GIRDER UNIT

ROUTE SECTION

ARKANSAS STATE HIGHWAY COMMISSION
LITTLE ROCK, ARKANSAS

DRAWN BY:	JPC	DATE:	05/2020	FILENAME:	b040781_s4.dgn
CHECKED BY:	MJM	DATE:	06/2020		
DESIGNED BY:	JPC	DATE:	05/2020	SCALE:	No Scale
BRIDGE NO.	07501			DRAWING NO.	61955

DATE REVISED	DATE FILMED	DATE REVISED	DATE FILMED	FED.RD. DIST.NO.	STATE	FED.AID PROJ.NO.	SHEET NO.	TOTAL SHEETS
				6	ARK.			
				JOB NO.		040781	77	115
				1 07501		- 147'-10⅜" UNIT -		61956

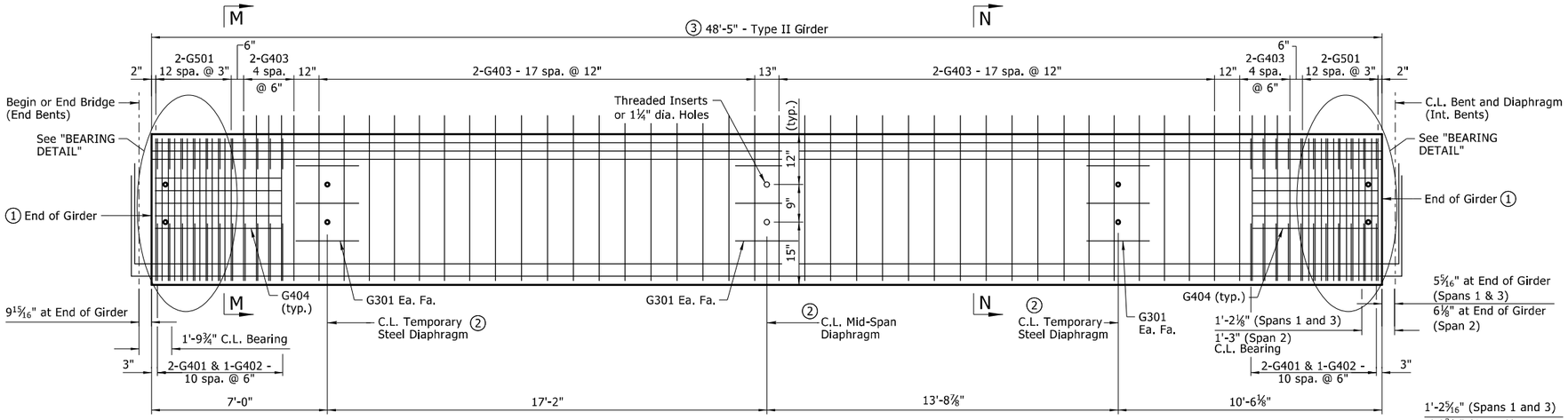

TYPICAL GIRDER ELEVATION (AASHTO TYPE II) - 48'-5"

Dimensions are measured along girders.

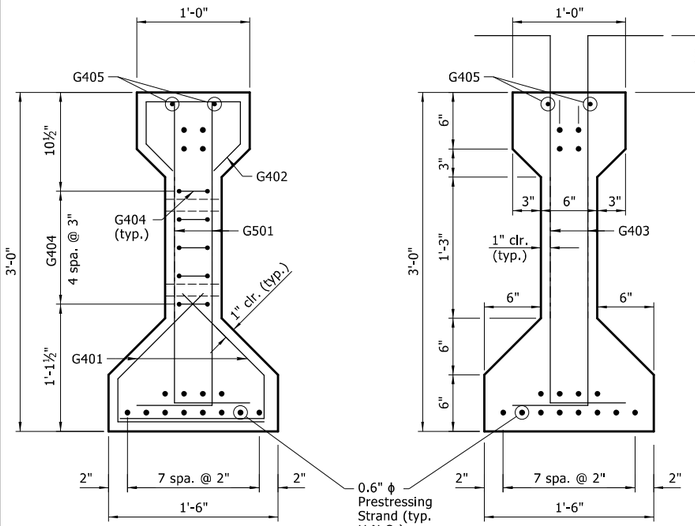

SECTION M-M

SECTION N-N

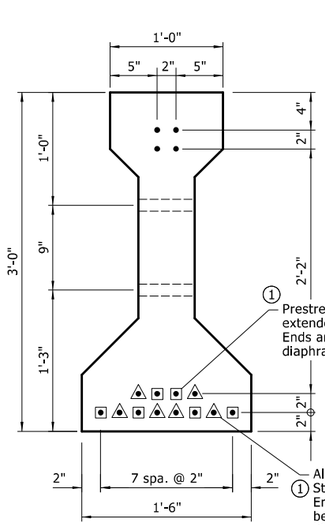

STRAND ARRANGEMENTS

Notes:
Dimensions are measured parallel to C.L. Girders.

Prestressing strands will not be paid for directly, but will be considered subsidiary to the item "Prestressed Concrete Girders (Type II)".

Prestressing strands shall be bonded along the entire length of the girder.

1 Saw and shop bend 6 bottom prestressing strands from each end of the girder into diaphragms as shown. Saw any remaining strands flush with the end of girder. See "Strand Arrangements" detail for alternating patterns.

At the Contractor's option, the location for bent up strands may be varied. The total number of bent - up strands shall not be changed.

2 Holes and Inserts shown are for diaphragms. See Dwg. No. 61954 for additional details.

3 This dimension shall be increased for effects of vertical profile on girder length to maintain 11⁷⁄₁₆" between ends of girders at Bent 2 and 11⁹⁄₁₆" between ends of girders at Bent 3.

See "FRAMING PLAN" on Dwg. No. 61954 for additional information.

BAR LIST - PER GIRDER

MARK	NO. REQ'D	LENGTH	PIN. DIA.	BENDING DIAGRAMS
G301	18	6'-0"	Str.	Note: Dimensions of bars are out-to-out.
G401	44	2'-7"	2"	
G402	22	2'-0"	2"	
G403	92	4'-5"	3"	
G404	10	10'-1"	2"	
G405	2	48'-1"	Str.	
G501	52	3'-3"	2½"	

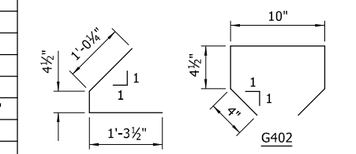

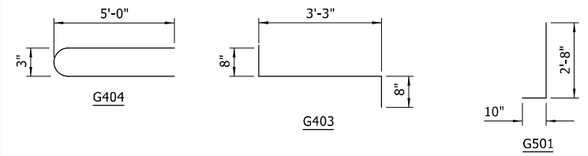

Notes:
All bars in BAR LIST shall be subsidiary to the item "Prestressed Concrete Girders (Type II)". See span drawings for bar list of span reinforcing.

At the Contractor's option, the two G401 bars may be furnished as one bar at no additional cost to the department.

CAMBER NOTES

The camber and dead load deflection values shown are estimated based on the required minimum concrete strength for the prestressed concrete girders. The Contractor shall provide the Engineer with the following information:

A. Actual 28-day concrete strength of prestressed concrete girders.
B. Estimated age of prestressed concrete girders at time of erection.
C. Profile of each girder under self weight.
D. Number of days since release of strands of each girder.

Following receipt of the above data, the Engineer will provide an updated camber and deflection diagram to the Contractor, if required.

Span Pt.	Inches	
	W_A	X_A
0.00	0.000	0.000
0.10	0.417	0.214
0.20	0.729	0.429
0.30	0.943	0.598
0.40	1.068	0.707
0.50	1.109	0.744
0.60	1.068	0.706
0.70	0.943	0.596
0.80	0.729	0.427
0.90	0.417	0.213
1.00	0.000	0.000

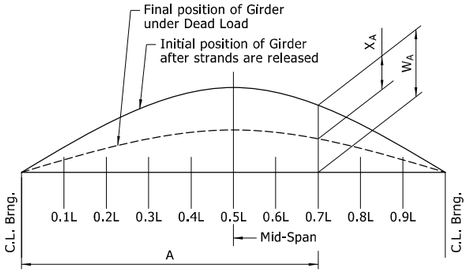

'W_A' is camber of Girder (Prestress + Dead Load of Girder @ 60 days after release)

'X_A' is Dead Load Deflection of Slab + Diaphragms + Composite Dead Load

Note:
'W_A' & 'X_A' are based on the required minimum concrete strength and may vary from the dimension shown. 'W_A' & 'X_A' shall be measured along bottom of girders unless otherwise approved by the Engineer. See "ADJUSTMENT FOR SLAB THICKNESS TOLERANCE" on Dwg. No. 61959 for limitations of the girder final position under dead load. The Contractor is responsible for any adjustment necessary to meet slab thickness tolerance and to achieve an acceptable finished grade. No payment shall be made for any additional concrete in the haunches when camber is less than shown.

CAMBER & DEFLECTIONS (INCHES)

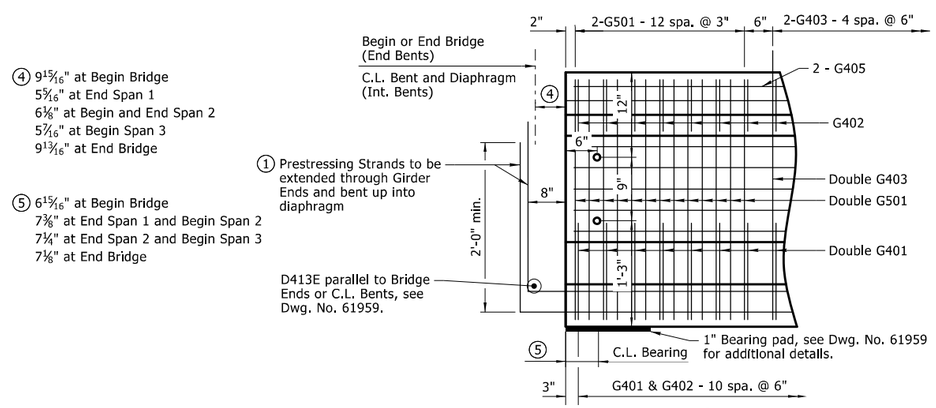

BEARING DETAIL

STATE OF ARKANSAS
REGISTERED PROFESSIONAL ENGINEER
No. 8940
MARK ASHER
12/12/2023

BRIDGE ENGINEER
PRINT DATE: $$DATE$$

SHEET 5 OF 10
DETAILS OF 147'-10⅜" INTEGRAL PRESTRESSED CONCRETE GIRDER UNIT
ROUTE SECTION

ARKANSAS STATE HIGHWAY COMMISSION
LITTLE ROCK, ARKANSAS

DRAWN BY:	JPC	DATE:	05/2020	FILENAME:	b040781_s5.dgn
CHECKED BY:	MJM	DATE:	06/2020		
DESIGNED BY:	JPC	DATE:	05/2020	SCALE:	No Scale
BRIDGE NO.	07501			DRAWING NO.	61956

DATE REVISED	DATE FILMED	DATE REVISED	DATE FILMED	FED.RD. DIST.NO.	STATE	FED.AID PROJ.NO.	SHEET NO.	TOTAL SHEETS
				6	ARK.			
				JOB NO.		040781	78	115
				(1) 07501		- 147'-10⅜" UNIT -		61957

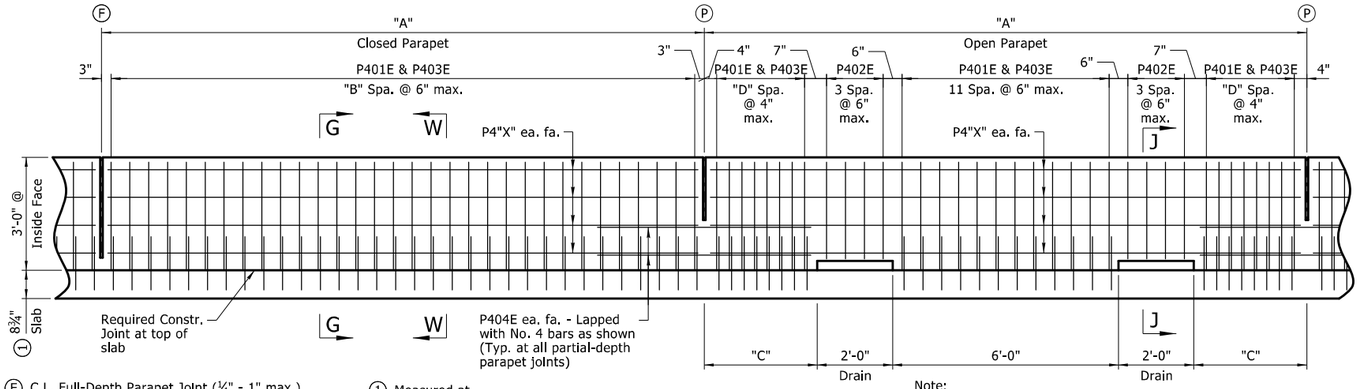

(F) C.L. Full-Depth Parapet Joint (¼" - 1" max.) Stop 6" from Top of Slab.

(P) C.L. Partial-Depth Parapet Joint (¼" - 1" max.) Stop 1'-4" from Top of Slab.

(1) Measured at edge of deck.

(2) 1" Chamfer (typ.)

DETAILS OF PARAPET RAIL

½" = 1'-0"

Note:
For locations of full-depth and partial depth parapet joints and locations of open and closed parapet panels, see "REINFORCING PLAN" on Dwg. No. 61953.

TABLE OF PARAPET RAIL VARIABLES

Panel Length		Closed Panel	Open Panel	
"A"	"X"	"B"	"C"	"D"
8'-0"	05E	15	-	-
8'-1⅛"	06E	16	-	-
16'-0"	07E	30	3'-0"	7
17'-5¼"	08E	34	-	-
17'-8⅜16"	09E	35	-	-
17'-10⅛16"	10E	-	3'-11⅛16"	10
18'-2⅜16"	11E	-	4'-1⅛"	11

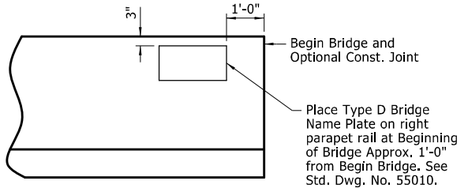

NAME PLATE DETAIL

(Showing Inside Face of Parapet)
No Scale

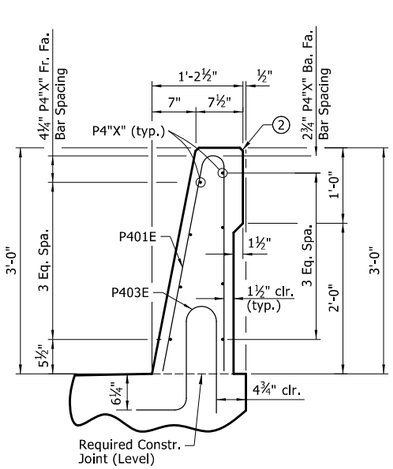

SECTION W-W

Note: Closed rail Right of C.L. Bridge.
1" = 1'-0"

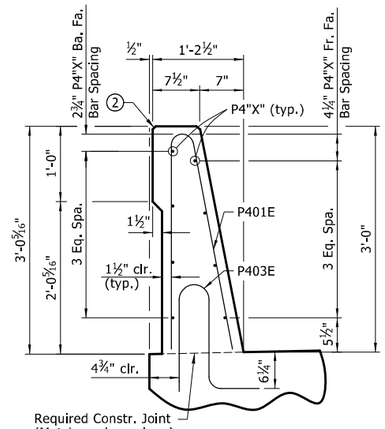

SECTION G-G

Note: Closed rail Left of C.L. Bridge.
1" = 1'-0"

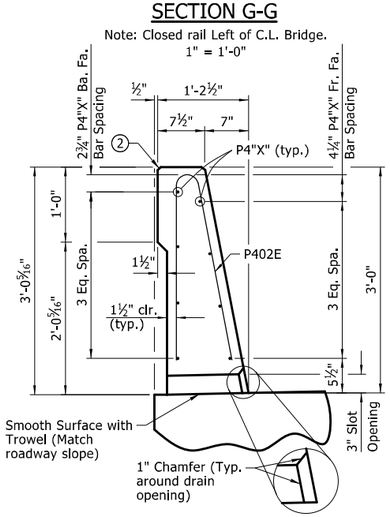

SECTION J-J

1" = 1'-0"

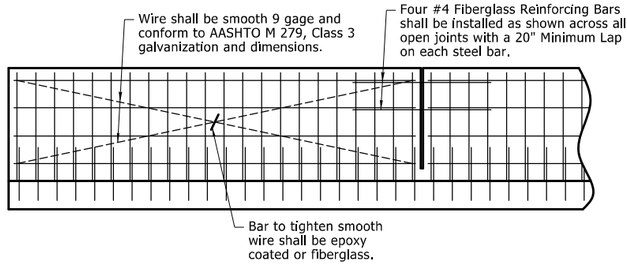

Note:
All panels shall be braced as shown to prevent racking. All open joints shall be sawed as soon as practical to a minimum width of ¼". To control cracking before sawing, all joints must be grooved before the concrete is set. Sawing of the joints must be controlled so it will follow the grooved joint.

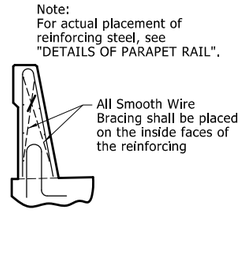

Note:
The extruded parapet shall conform to the horizontal and vertical lines shown on the plans or as directed by the Engineer and shall present a smooth, uniform appearance and texture. Exposed surfaces may be given a light brush finish or a Class 3, Textured Coating Finish, in place of the Class 2, Rubbed Finish.

DETAILS OF OPTIONAL SLIPFORMING OF CONCRETE PARAPET RAIL

No Scale

BAR LIST

MARK	NO. REQ'D	LENGTH	PIN. DIA.
S401E	649	40'-0"	Str.
S501E - S5264E	2 ea.	52'-8" - 48'-4"	Str.
S5265E - S5298E	2 ea.	6'-5" - 50'-5"	Str.
S5299E - S5328E	2 ea.	46'-1" - 7'-1"	Str.
S5329E	8	7'-10"	3¾"
S5330E	1	55'-1"	3¾"
S5331E	1	49'-9"	3¾"
S5332E	588	8'-1"	3¾"
S5333E	97	4'-0"	Str.
S601E	103	9'-4"	4½"
S602E	103	15'-0"	Str.
S603E	4	7'-10"	4½"
S604E	4	9'-8"	4½"
S605E	4	7'-10"	4½"
S606E	4	9'-7"	4½"
P401E	550	5'-11"	2½"
P402E	72	5'-2"	2½"
P403E	550	3'-7"	3"
P404E	144	5'-8"	Str.
P405E	64	7'-8"	Str.
P406E	32	7'-9"	Str.
P407E	48	15'-8"	Str.
P408E	8	17'-1"	Str.
P409E	16	17'-4"	Str.
P410E	8	17'-6"	Str.
P411E	16	18'-10"	Str.
R401E	56	5'-11"	3¾"
R402E	20	5'-10"	3¾"
R403E	4	5'-2"	2"
R404E	8	9'-3"	Str.
R405E	24	9'-8"	Str.
R406E	16	4'-0"	Str.
R407E	4	3'-11"	2"
R408E	32	4'-6"	Str.
W401E - W415E	4 ea.	3'-7" - 3'-11"	Str.
W416E - W430E	4 ea.	3'-9" - 3'-3"	Str.
W431E	72	3'-11"	3¾"
W901E	12	13'-3"	Str.
W902E	24	12'-4"	Str.
W903E	12	13'-4"	Str.
D401E	112	7'-4"	2"
D402E	120	7'-6"	Str.
D403E	12	6'-9"	Str.
D404E	12	5'-1"	Str.
D405E	12	3'-6"	Str.
D406E	16	5'-7"	Str.
D407E	101	8'-4"	2"
D408E	16	2'-2"	Str.
D409E	100	8'-0"	Str.
D410E	8	5'-0"	Str.
D411E	8	4'-7"	Str.
D412E	8	2'-10"	Str.
D413E	16	4'-6"	3"
D414E	4	6'-3"	2"
D415E	44	4'-0"	Str.
D416E	93	8'-3"	2"
D501E	7	56'-3"	Str.
D502E	7	50'-11"	Str.

BENDING DIAGRAMS

Notes:
Dimensions of bars are out-to-out.
All bars designated with an "E" suffix are to be epoxy coated.

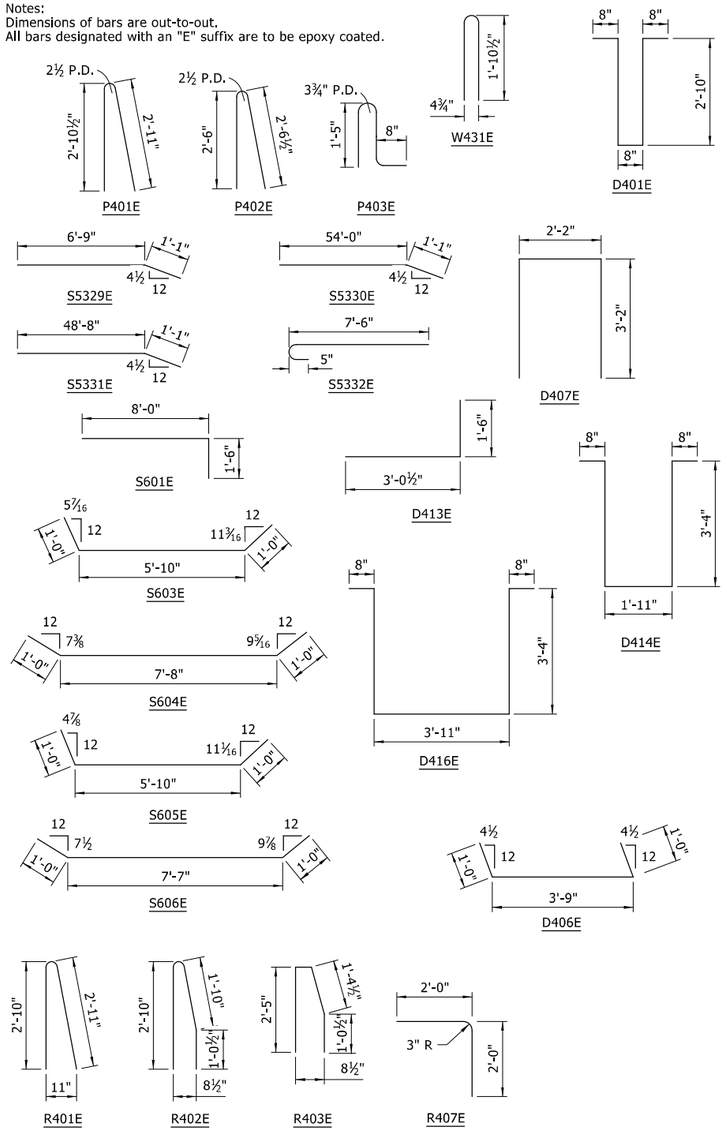

STATE OF ARKANSAS
REGISTERED PROFESSIONAL ENGINEER
No. 8940
MARK ASHER

12/12/2023

BRIDGE ENGINEER
PRINT DATE: $$DATE$$

SHEET 6 OF 10
DETAILS OF 147'-10⅜" INTEGRAL PRESTRESSED CONCRETE GIRDER UNIT

ROUTE SECTION

ARKANSAS STATE HIGHWAY COMMISSION
LITTLE ROCK, ARKANSAS

DRAWN BY:	JPC	DATE:	05/2020	FILENAME:	b040781_s6.dgn
CHECKED BY:	MJM	DATE:	06/2020		
DESIGNED BY:	JPC	DATE:	05/2020	SCALE:	As Shown
BRIDGE NO.	07501			DRAWING NO.	61957

DATE REVISED	DATE FILMED	DATE REVISED	DATE FILMED	FED.RD. DIST.NO.	STATE	FED.AID PROJ.NO.	SHEET NO.	TOTAL SHEETS
				6	ARK.			
				JOB NO.		040781	79	115

(1) 07501 - 147'-10⅜" UNIT - 61958

Modify the wing rail and connection detail above the gutterline as required by the manufacturer of the bridge end terminal. Reinforcing bars that are relocated or bent to fit the modified bridge rail should have minimum concrete cover.

(3) Connector Plate not required at location of bridge end terminal, unless required by manufacturer of the bridge end terminal.

See Dwg. No. 61941 for location of bridge end terminal.

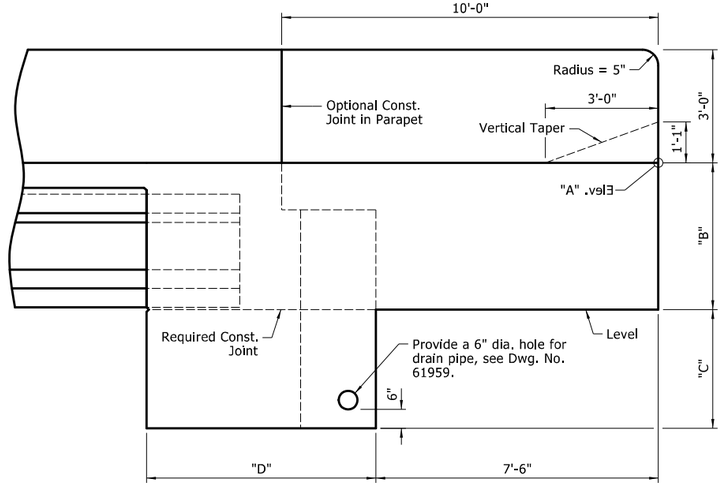

VIEW R-R
½" = 1'-0"

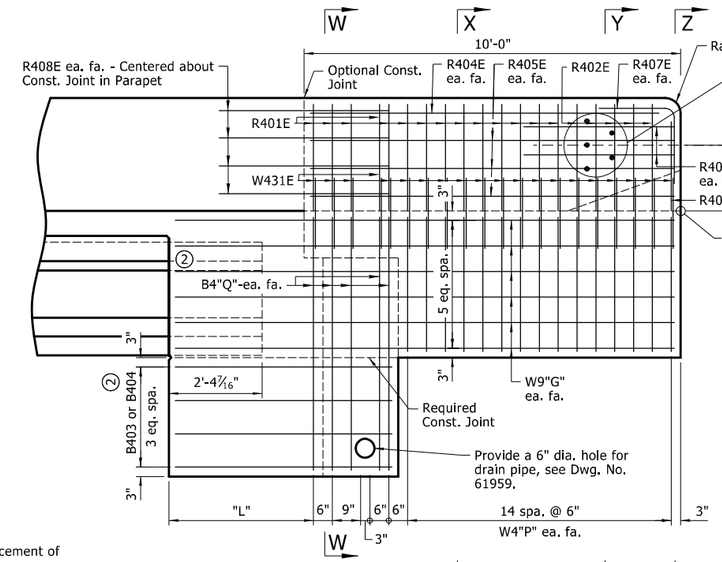

SECTION L-L
½" = 1'-0"

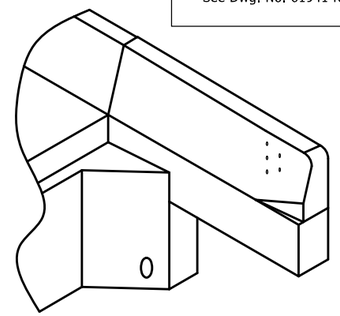

THREE DIMENSIONAL VIEW OF WING AND RAIL AT INTEGRAL END BENT
No Scale

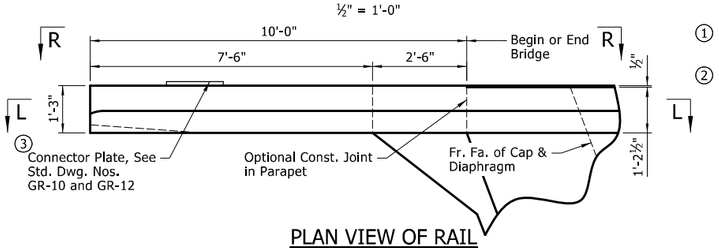

PLAN VIEW OF RAIL
½" = 1'-0"

(1) See "DETAIL A" for placement of bars W431E.

(2) See End Bent Details on Dwg. No. 61944 and 61950 for reinforcing steel and additional details.

TABLE OF VARIABLES

Bent	Wing	Elev. "A"	"B"	"C"	"D"	"G"	"L"	"M"	"N"	"P"	"Q"	"R"
1	A	588.50	4'-1⅜16"	3'-7⅞16"	6'-1¼16"	01E	3'-10⅛16"	03E	1'-10⅞16"	01E - 15E	11E	12E
	B	587.79	4'-1¼16"	3'-0"	5'-2⅛16"	02E	2'-11⅜16"	04E	1'-10⅛16"	01E - 15E	05E	06E
4	A	584.11	3'-6⅛16"	3'-0"	6'-2⅛"	03E	3'-11⅜"	05E	1'-10⅛16"	16E - 30E	05E	06E
	B	584.56	3'-7⅛"	3'-5⅛16"	5'-2⅜16"	02E	2'-11⅜16"	06E	1'-10⅞16"	16E - 30E	11E	12E

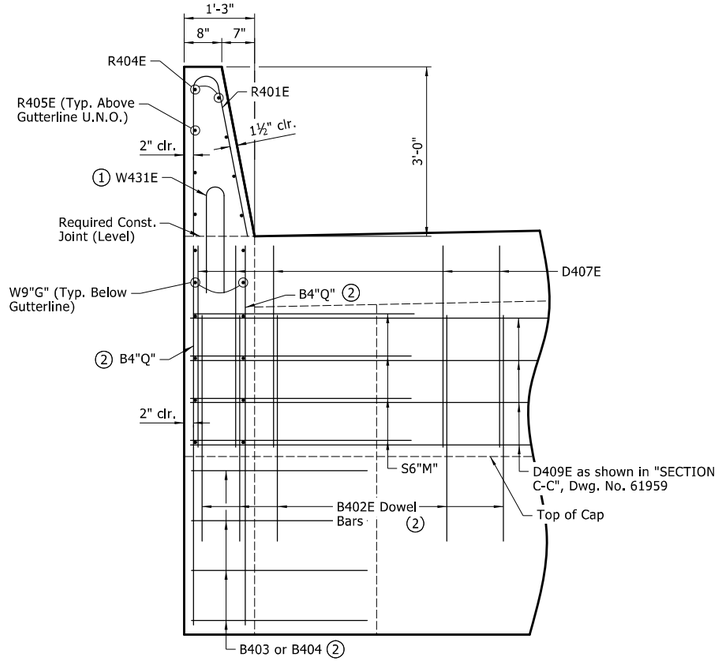

SECTION W-W
¾" = 1'-0"

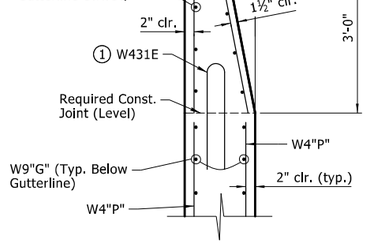

SECTION X-X
¾" = 1'-0"

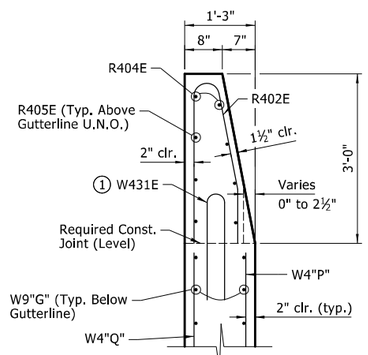

SECTION Y-Y
¾" = 1'-0"

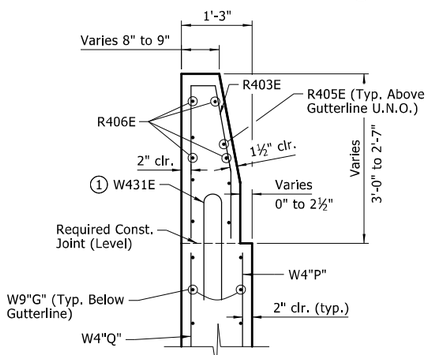

SECTION Z-Z
¾" = 1'-0"

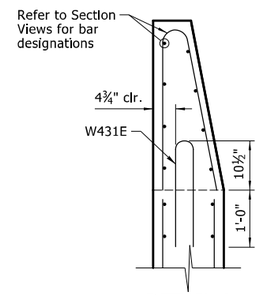

DETAIL A
¾" = 1'-0"

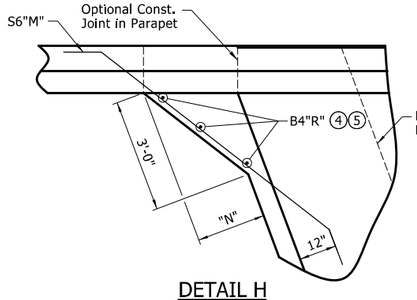

DETAIL H
(4) Shown at Bent 1 - Wing B, similar for Bent 4 - Wing B
½" = 1'-0"

(5) Space bars to avoid interference with 6" dia. hole for drain pipe. (Hole not shown)

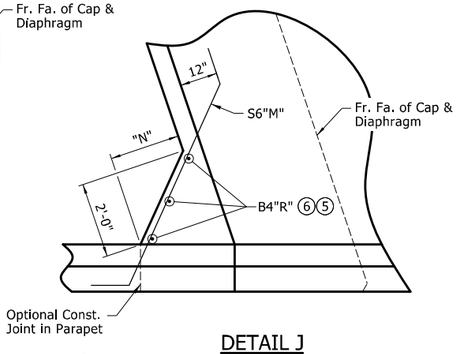

DETAIL J
(6) Shown at Bent 1 - Wing A, similar for Bent 4 - Wing A
½" = 1'-0"

STATE OF ARKANSAS REGISTERED PROFESSIONAL ENGINEER No. 8940 MARK ASHER

12/12/2023

BRIDGE ENGINEER
PRINT DATE: $$DATE$$

SHEET 7 OF 10
DETAILS OF 147'-10⅜" INTEGRAL PRESTRESSED CONCRETE GIRDER UNIT
ROUTE SECTION
ARKANSAS STATE HIGHWAY COMMISSION
LITTLE ROCK, ARKANSAS

DRAWN BY:	JPC	DATE:	05/2020	FILENAME:	b040781_s7.dgn
CHECKED BY:	CJF	DATE:	06/2020		
DESIGNED BY:	JPC	DATE:	05/2020	SCALE:	As Shown
BRIDGE NO.	07501		DRAWING NO.		61958

GENERAL NOTES

CONCRETE:
All concrete, except for prestressed girders, shall be Class S(AE) with a minimum 28 day compressive strength f'c = 4,000 psi. Concrete shall be poured in the dry and all exposed corners shall be chamfered ¾" unless otherwise noted.

The superstructure details shown are for use when removable deck forming is used and are the basis for measurement of Class S(AE) Concrete. See Standard Drawing No. 55005 for allowable modifications and for tolerances when Permanent Steel Bridge Deck Forms are used.

Concrete in the bridge superstructure shall be placed, consolidated and screeded off for the entire pour before any concrete has taken its initial set. This may require the use of a retarding agent.

The concrete deck (roadway surface) shall be given a tine finish in accordance with Subsection 802.19 for Class 5 Tined Bridge Roadway Surface Finish. Movement of the finishing machine across new concrete shall be on planks placed on the surface and shall be prohibited for 72 hours after finishing the pour. Sufficient concrete must be placed ahead of the strike-off to fully load the girder. When permitted, the use of a longitudinal strike-off will require that a vertical camber adjustment be made in the strike-off to account for the future dead load deflection due to any railings.

REINFORCING STEEL:
All reinforcing steel shall be Grade 60 conforming to AASHTO M 31 or M 322, Type A, with mill test reports and shall be epoxy coated. The reinforcing steel is to be accurately located in the forms and firmly held in place by steel wire supports, sufficient number and size to prevent displacement during the course of construction. The wire supports will not be paid for directly, but will be considered subsidiary to the item "Epoxy Coated Reinforcing Steel (Grade 60)".

STRUCTURAL STEEL:
Structural steel shall be ASTM A709 as specified in the plans. Structural steel completely embedded in concrete may be ASTM A709, Gr. 36, or Gr. 50 unless otherwise noted.

Drawings show general features for design only. Shop drawings shall be made in accordance with the specifications, submitted and approval secured before fabrication is begun.

Requests for subsitution of structural steel shapes shown with shapes of greater size must be submitted by the Contractor to the Engineer for approval. Steels of equal or greater strengths will be accepted only when shown on the approved shop drawings.

All welding that is to be done during fabrication of structural steel, including temporary welds, shall be detailed on the shop drawings and submitted for approval. If additional welds are required, whether permanent or temporary, a formal request with detailed drawings shall be submitted to the Engineer for approval. All welding shall conform to Subsection 807.26.

PRESTRESSED GIRDER:
Prestressing stell shall be 0.6" ϕ Low Relaxation strands with a minimum ultimate strength of 270 ksi, and shall conform to AASHTO M 203.

Distances from the forms and spacing of the Prestressing Steel shall be maintained by stays, ties, hangers, spacers, or other approved supports which shall be shown on the Shop Drawings.

All girders shall be Type II as noted on the details and shall be the standard prestressed sections adopted by the Joint Committee of AASHTO and the Prestressed Concrete Institute. All girders shall be cast in concrete floored pallets and in metal forms. All work and materials shall be as specified in Subsection 802.22.

Concrete shall be Class S and shall have a minimum 28 day compressive strength, f'c = 8,000 psi. The initial tensile force applied to each 0.6" ϕ strand shall be 43,940 lbs. except as noted. Transfer of this tensioning load to the girder shall not be done until the compressive strength of the concrete is 6,000 psi.

Dimensions shown are to the center of the strands.

The Contractor shall submit the method and sequence for release of strands to the Engineer for approval prior to casting of the girders.

The tops of the girder shall be roughened to an amplitude of ¼" and shall be scrubbed transversely with a coarse wire brush to remove all laitance to produce an adequate surface for bonding to the slab.

Extreme care shall be exercised in handling and moving precast prestressed concrete girders. Girders must be maintained in an upright position at all times and must be picked up from points near the girder ends. Disregard of this requirement may lead to collapse of the girder. The Contractor's proposed lifting details shall be submitted on shop drawings to the Engineer for approval. The use of holes for lifting purposes will not be permitted.

The points of support and directions of the reactions with respect to the member shall be approximately the same during transportation and storage as when the member is in its final position.

Girder lengths shown on the design plans are net lengths measured horizontally along the girder centerlines. The girder manufacturer shall make the necessary allowances for grade and shortening due to elastic shortening, creep, and shrinkage.

After detensioning, saw cut, grind, or bend up strands as designated by the plans. Heat-cuting or bending methods shall not be used within 6" of the girder.

The Contractor may submit alternate strand patterns with design calculations for review and approval.

Drawings show general features of design only. Shop drawings shall be made in accordance with the specifications, submitted, and approval secured before fabrication is begun.

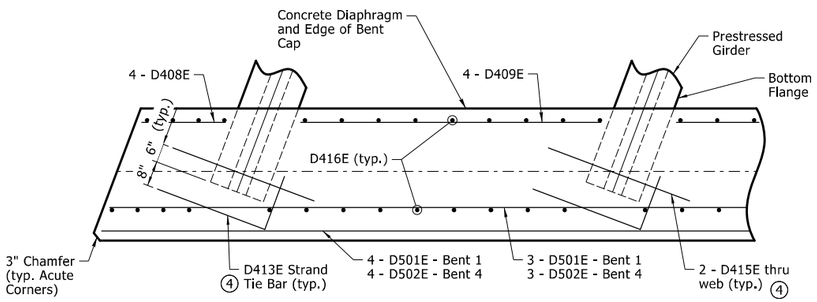

SECTION E-E

End Bent Diaphragms
(Shown at Left Edge of Bridge Bent 1, similar for other End Bent Locations see Dwg. Nos. 61952, 61960 and 61961 for additional information)
½" = 1'-0"

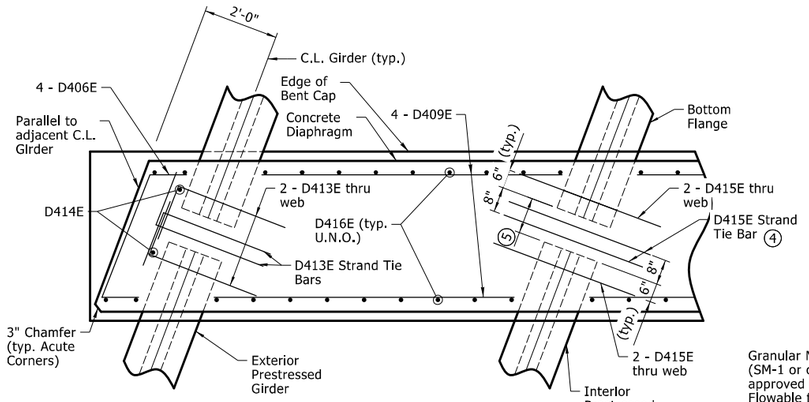

SECTION D-D

Intermediate Bent Diaphragms
(Shown at Left Edge of Bridge, similar for Right Edge of Bridge, see Dwg. Nos. 61952, 61960 and 61961 for additional information)
½" = 1'-0"

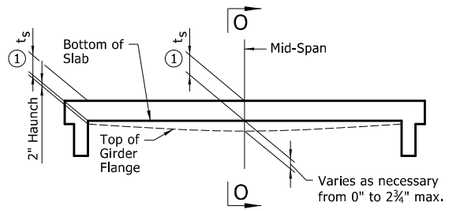

GIRDER ELEVATION

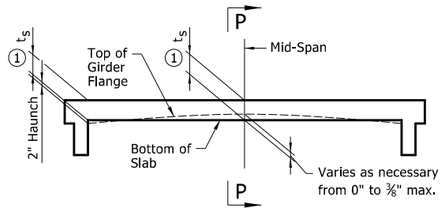

GIRDER ELEVATION

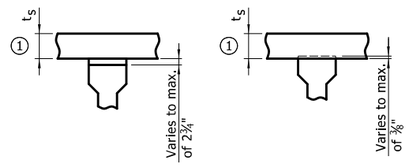

SECTION O-O SECTION P-P

Notes:
t_S = slab thickness as shown on superstructure details - See "TYPICAL ROADWAY SECTION", Dwg. No. 61952.

① Tolerance when removable deck forming is used +½", -¼". Haunch forming is required and shall be adjusted to maintain slab thickness tolerance. See Std. Dwg. No. 55005 for tolerances when permanent steel deck forms are used.

"GIRDER ELEVATION" sketches show the range of acceptability of the top of the Girder relative to bottom of slab after the placement of the slab. When the top of the Girder projects more than ⅜" into the slab, a raise in grade will be necessary. Girders shall be set in a sufficient number of spans over suitable increments so the revised grade line will produce a smooth riding surface. Variation of haunch height will be at the Contractor's expense.

ADJUSTMENT FOR SLAB THICKNESS TOLERANCE

No Scale

Notes:
② For additional details, see End Bent Details, Dwg. No. 61944 & 61950.

③ Unreinforced bearing pads shall meet the requirements of Section 808 with the exception that hardness shall be 50 durometer. Unreinforced bearing pads shall not be paid for directly but shall be considered subsidiary to the item "Class S Concrete-Bridge". Estimated pad deflection under load is 1/4"

④ Placed perpendicular to C.L. Girders.

⑤ Varies - See "FRAMING PLAN", Dwg. No. 61954 for additional information.

⑥ Horizontal Dimensions are measured perpendicular to Begin Bridge, End Bridge and C.L. Bents except as noted.

⑦ Completely fill void in Diaphragm under girder with Silicone Joint Sealant conforming to ASTM D5893, Type NS. Silicone Joint Sealant will not be paid for directly, but shall be considered subsidiary to the Item "Class S(AE) Concrete - Bridge".

1" Polystyrene Foam Board, Filter Fabric and Granular Material shall not be paid for directly, but shall be considered subsidiary to the various bid items.

Limits of the concrete End Bent Diaphragms shall match plan dimensions of the End Bent Cap.

For additional details of pipe underdrain see Std. Dwg. PU-1 and Section 611. Pipe underdrains, outlet protectors, granular materials, drain pipe, filter fabric and polystyrene foam board will not be measured or paid for separately, but will be considered subsidiary to various bid items.

⑧ External Load Plates shall conform to ASTM A709, Gr. 50W. External load plates shall be completely fabricated and shall be cleaned before vulcanizing to the elastomeric bearing. The surface in contact with the elastomeric bearing shall be cleaned in accordance with Subsection 808.03. External Load Plates shall not be paid for directly but shall be considered subsidiary to the item "Class S Concrete-Bridge".

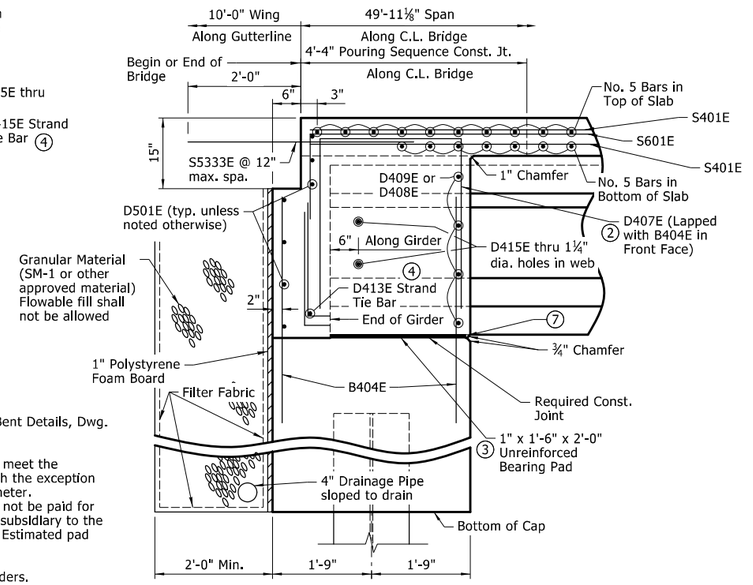

SECTION C-C ⑥

End Bent Diaphragms
¾" = 1'-0"

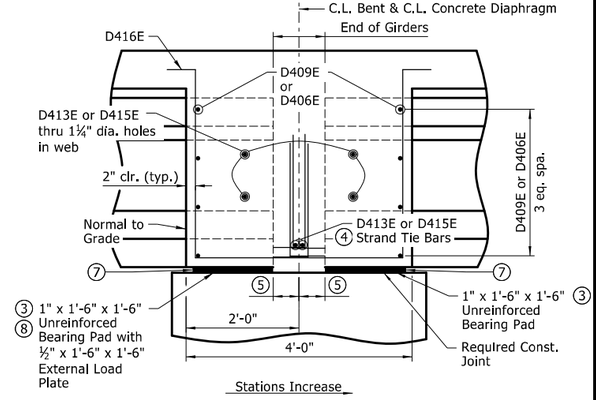

SECTION B-B ⑥

Intermediate Bent Diaphragms
¾" = 1'-0"

DATE REVISED	DATE FILMED	DATE REVISED	DATE FILMED	FED.RD. DIST.NO.	STATE	FED.AID PROJ.NO.	SHEET NO.	TOTAL SHEETS
				6	ARK.			
				JOB NO.		040781	80	115
				① 07501		- 147'-10⅜" UNIT -		61959

STATE OF ARKANSAS
REGISTERED PROFESSIONAL ENGINEER
No. 8940
MARK ASHER
12/12/2023

BRIDGE ENGINEER
PRINT DATE: $$DATE$$

DRAWN BY: JPC DATE: 05/2020
CHECKED BY: CJF DATE: 06/2020
DESIGNED BY: JPC DATE: 05/2020
BRIDGE NO. 07501
FILENAME: b040781_s8.dgn
SCALE: As Shown
DRAWING NO. 61959

SHEET 8 OF 10
DETAILS OF 147'-10⅜" INTEGRAL PRESTRESSED CONCRETE GIRDER UNIT
ROUTE SECTION
ARKANSAS STATE HIGHWAY COMMISSION
LITTLE ROCK, ARKANSAS

DATE REVISED	DATE FILMED	DATE REVISED	DATE FILMED	FED.RD. DIST.NO.	STATE	FED.AID PROJ.NO.	SHEET NO.	TOTAL SHEETS
				6	ARK.			
				JOB NO.		040781	81	115
				① 07501		- 147'-10⅜" UNIT -		61960

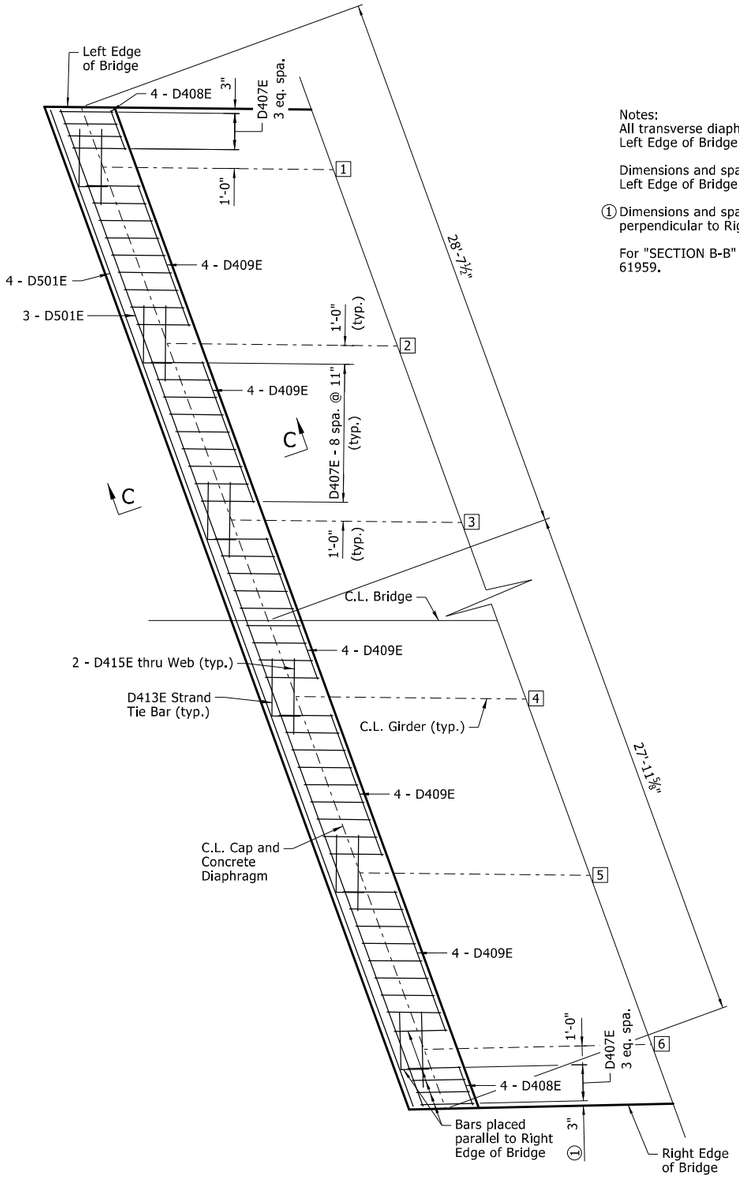

PARTIAL PLAN OF CONCRETE DIAPHRAGM REINFORCING - BENT 1

Notes:
All transverse diaphragm reinforcement placed parallel to Left Edge of Bridge Unless Noted Otherwise.

Dimensions and spaces are measured perpendicular to Left Edge of Bridge unless noted otherwise.

① Dimensions and spaces along this line are measured perpendicular to Right Edge of Bridge.

For "SECTION B-B" and "SECTION C-C", see Dwg. No. 61959.

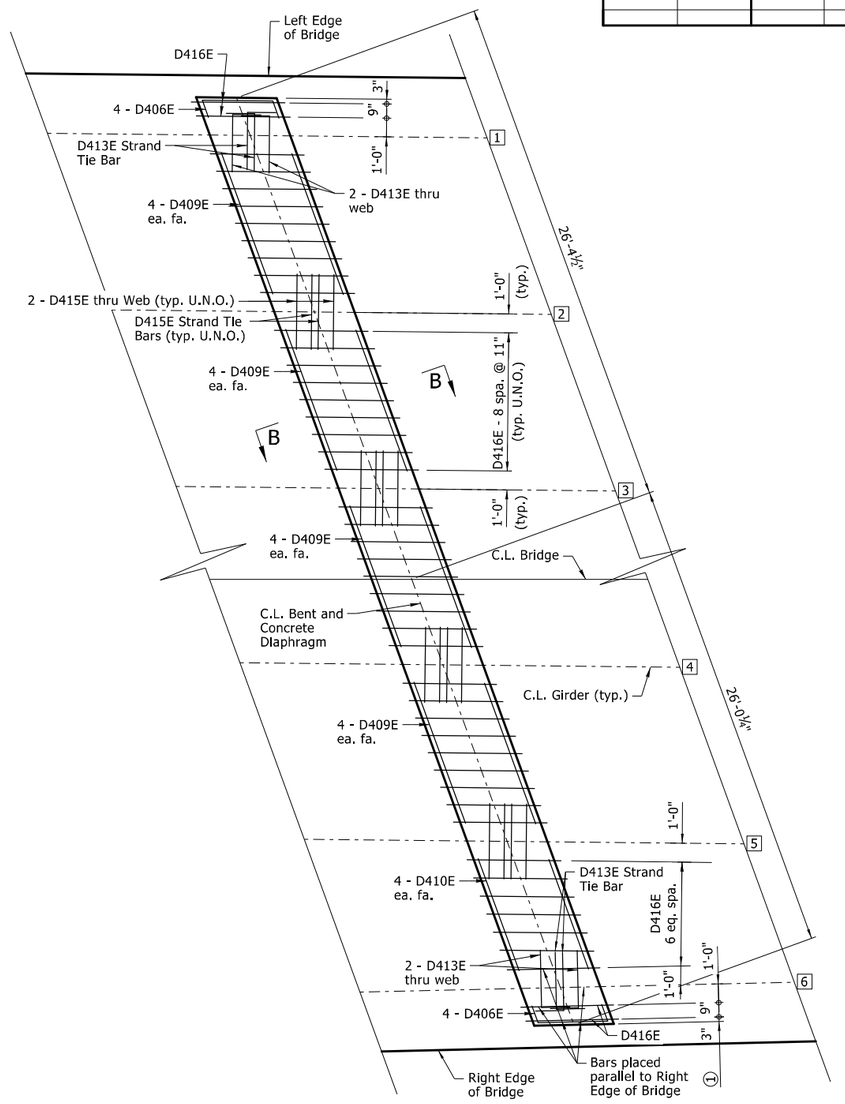

PARTIAL PLAN OF CONCRETE DIAPHRAGM REINFORCING - BENT 2

STATE OF ARKANSAS
REGISTERED PROFESSIONAL ENGINEER
No. 8940
MARK ASHER
12/12/2023

BRIDGE ENGINEER
PRINT DATE: $$DATE$$

SHEET 9 OF 10
DETAILS OF 147'-10⅜" INTEGRAL PRESTRESSED CONCRETE GIRDER UNIT
ROUTE SECTION
ARKANSAS STATE HIGHWAY COMMISSION
LITTLE ROCK, ARKANSAS

DRAWN BY:	JPC	DATE:	05/2020	FILENAME:	b040781_s9.dgn
CHECKED BY:	RDR	DATE:	06/2020		
DESIGNED BY:	JPC	DATE:	05/2020	SCALE:	¼" = 1'-0"
BRIDGE NO.	07501			DRAWING NO.	61960

DATE REVISED	DATE FILMED	DATE REVISED	DATE FILMED	FED.RD. DIST.NO.	STATE	FED.AID PROJ.NO.	SHEET NO.	TOTAL SHEETS
				6	ARK.			
				JOB NO.		040781	82	115
				(1) 07501		- 147'-10⅜" UNIT -		61961

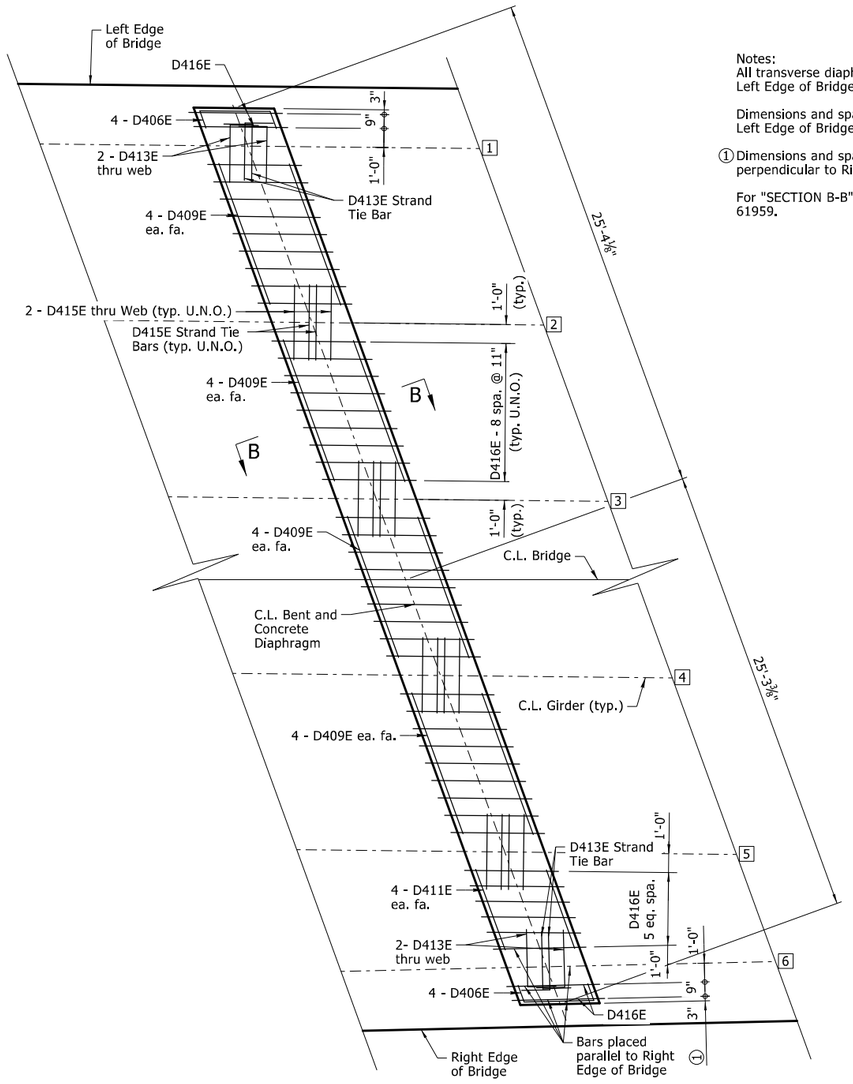

PARTIAL PLAN OF CONCRETE DIAPHRAGM REINFORCING - BENT 3

Notes:
All transverse diaphragm reinforcement placed parallel to Left Edge of Bridge Unless Noted Otherwise.

Dimensions and spaces are measured perpendicular to Left Edge of Bridge unless noted otherwise.

(1) Dimensions and spaces along this line are measured perpendicular to Right Edge of Bridge.

For "SECTION B-B" and "SECTION C-C", see Dwg. No. 61959.

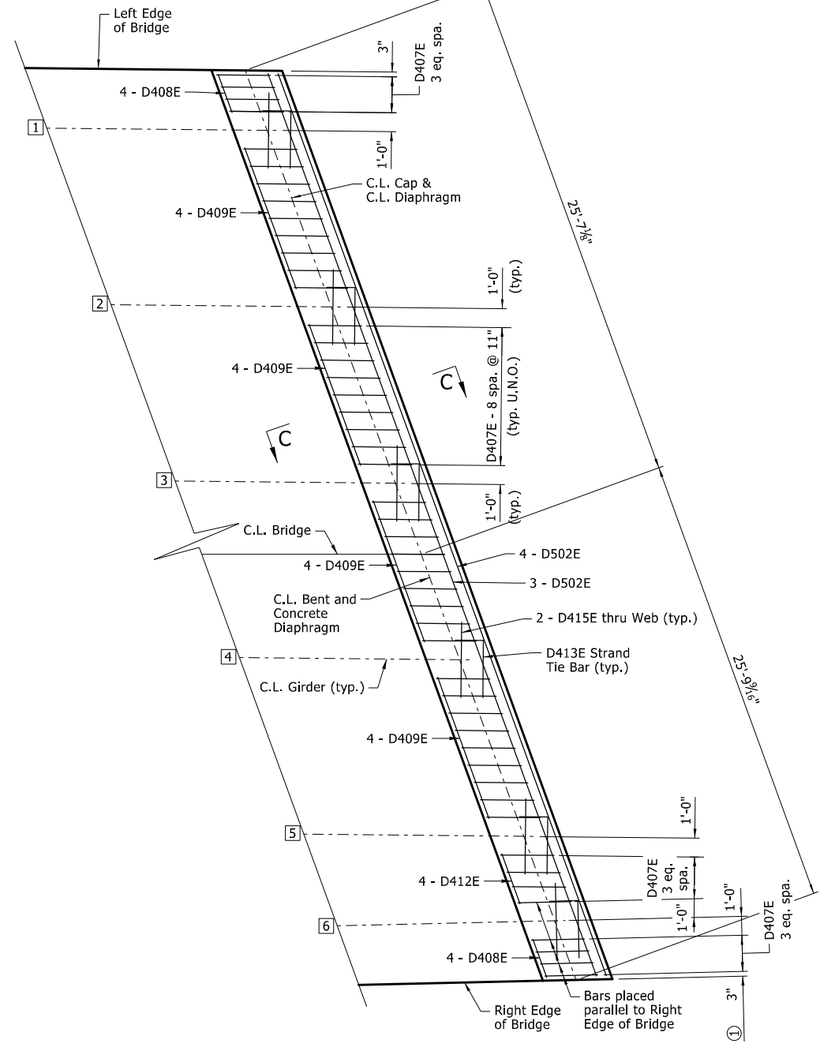

PARTIAL PLAN OF CONCRETE DIAPHRAGM REINFORCING - BENT 4

STATE OF ARKANSAS
REGISTERED PROFESSIONAL ENGINEER
No. 8940
MARK ASHER

12/12/2023

BRIDGE ENGINEER
PRINT DATE: $$DATE$$

SHEET 10 OF 10
DETAILS OF 147'-10⅜" INTEGRAL PRESTRESSED CONCRETE GIRDER UNIT
ROUTE SECTION
ARKANSAS STATE HIGHWAY COMMISSION
LITTLE ROCK, ARKANSAS

DRAWN BY:	JPC	DATE:	05/2020	FILENAME:	b040781_s10.dgn
CHECKED BY:	RDR	DATE:	06/2020		
DESIGNED BY:	JPC	DATE:	05/2020	SCALE:	¼" = 1'-0"
BRIDGE NO.	07501			DRAWING NO.	61961

DATE REVISED	DATE FILMED	DATE REVISED	DATE FILMED	FED.RD. DIST.NO.	STATE	FED.AID PROJ.NO.	SHEET NO.	TOTAL SHEETS
				6	ARK.			
				JOB NO.		040781	83	115

① 07501 - APPR. GUTTERS 1 & 2 - 61962

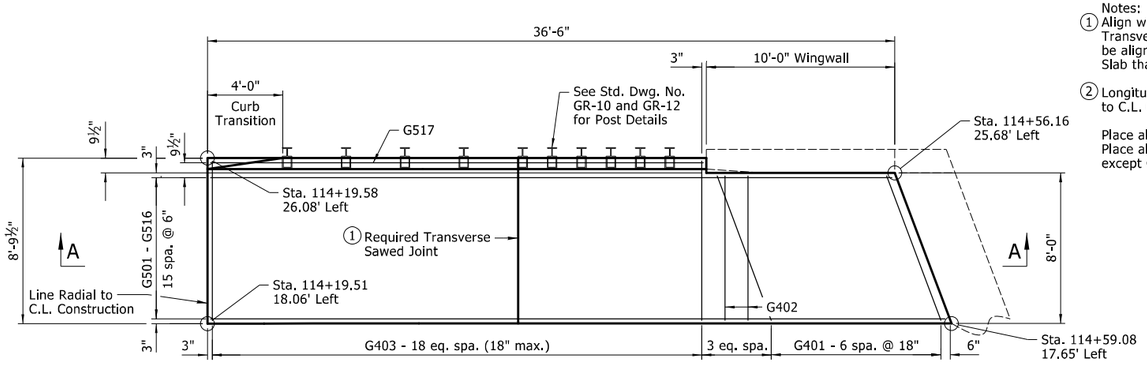

PLAN - TYPE 1 SPECIAL APPROACH GUTTERS ②

¼" = 1'-0"

Notes:

① Align with Transverse Sawed Joint in Approach Slab. Only 1 Transverse Joint shall be sawed per Gutter and the joint shall be aligned with Transverse Sawed Joint in adjacent Approach Slab that is closest to the center of of the Gutter.

② Longitudinal Lines before Sta. 114+30.00 shall be concentric to C.L. Construction.

Place all longitudinal steel parallel to adjacent lane taper. Place all transverse steel perpendicular to adjacent lane taper except G401 and G404 bars shall be placed as shown.

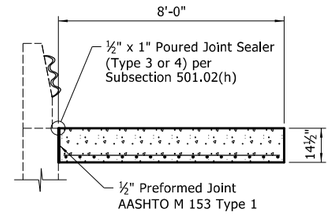

SECTION B-B

⅜" = 1'-0"

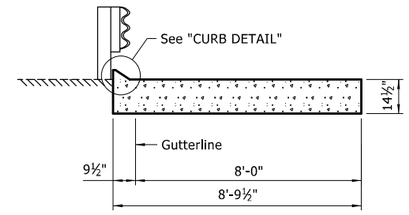

SECTION C-C

⅜" = 1'-0"

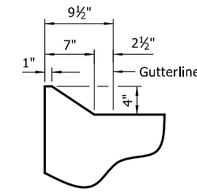

CURB DETAIL

No Scale

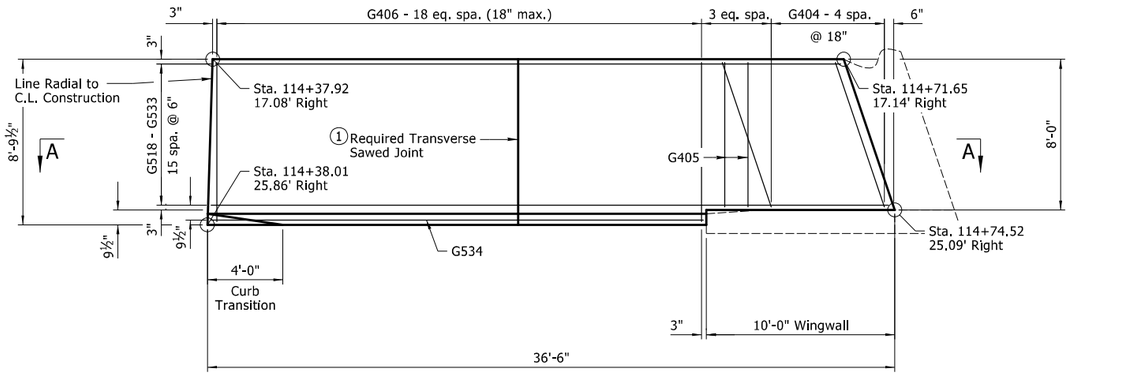

③ PLAN - TYPE 2 SPECIAL APPROACH GUTTERS

¼" = 1'-0"

BAR LIST FOR TYPE 1 SPECIAL APPROACH GUTTER

MARK	NO. REQ'D	LENGTH	PIN. DIA.
G401	7	8'-2"	Str.
G402	2	7'-8"	Str.
G403	19	8'-5"	Str.
G501 - G516	1 ea.	39'-0" - 36'-2"	Str.
G517	1	26'-2"	Str.

BAR LIST FOR TYPE 2 SPECIAL APPROACH GUTTER

MARK	NO. REQ'D	LENGTH	PIN. DIA.
G404	5	8'-1"	Str.
G405	2	7'-8"	Str.
G406	19	8'-5"	Str.
G518 - G533	1 ea.	35'-11" - 33'-2"	Str.
G534	1	26'-2"	Str.

QUANTITIES FOR ONE TYPE 1 SPECIAL APPROACH GUTTER

Reinforcing Steel (lbs.)	Concrete (Cu. Yds.)
810	14.75

QUANTITIES FOR ONE TYPE 2 SPECIAL APPROACH GUTTER

Reinforcing Steel (lbs.)	Concrete (Cu. Yds.)
748	13.67

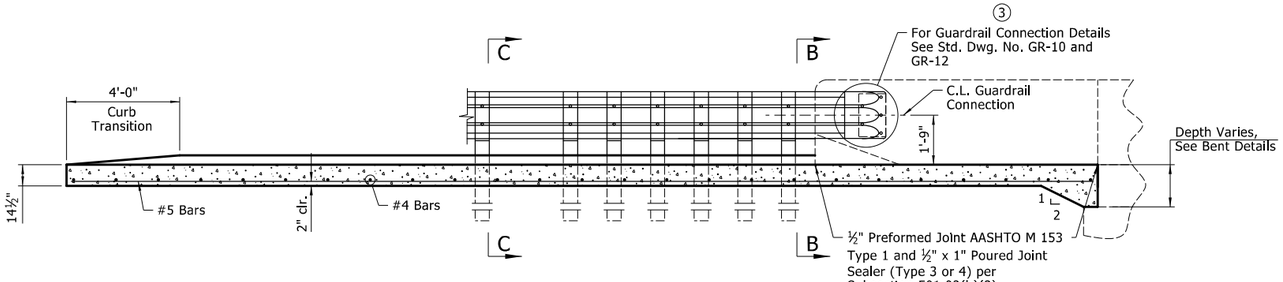

SECTION A-A

⅜" = 1'-0"

③ Modify the wing rail and connection detail above the gutterline as required by the manufacturer of the bridge end terminal. Reinforcing bars that are relocated or bent to fit the modified bridge rail should have minimum concrete cover.

Connector Plate not required at location of bridge end terminal, unless required by manufacturer of the bridge end terminal.

See Dwg. No. 61941 for location of bridge end terminal.

GENERAL NOTES

All concrete shall be Class S(AE) (f'c = 4,000 psi) and shall be poured in the dry.

Reinforcement Steel shall conform to AASHTO M 31 or M 322, Type A with Mill Test Reports, Gr. 60 (fy = 60,000 psi).

Approach Gutters will be measured and paid for in accordance with Section 504 of the Standard Specifications.

Surface finish for Approach Gutters to match that used on the bridge deck.

STATE OF ARKANSAS REGISTERED PROFESSIONAL ENGINEER No. 8940 MARK ASHER

12/12/2023

BRIDGE ENGINEER

PRINT DATE: $$DATE$$

DETAILS OF TYPE 1 & 2 SPECIAL APPROACH GUTTERS

ROUTE SECTION

ARKANSAS STATE HIGHWAY COMMISSION

LITTLE ROCK, ARKANSAS

DRAWN BY:	JPC	DATE:	05/2020	FILENAME:	b040781_ag1.dgn
CHECKED BY:	JRS	DATE:	06/2020		
DESIGNED BY:	JPC	DATE:	05/2020	SCALE:	As Shown
BRIDGE NO.	07501			DRAWING NO.	61962

DATE REVISED	DATE FILMED	DATE REVISED	DATE FILMED	FED.RD. DIST.NO.	STATE	FED.AID PROJ.NO.	SHEET NO.	TOTAL SHEETS
				6	ARK.			
				JOB NO.		040781	84	115
				1 07501		- APPR. GUTTERS 3 & 4 -		61963

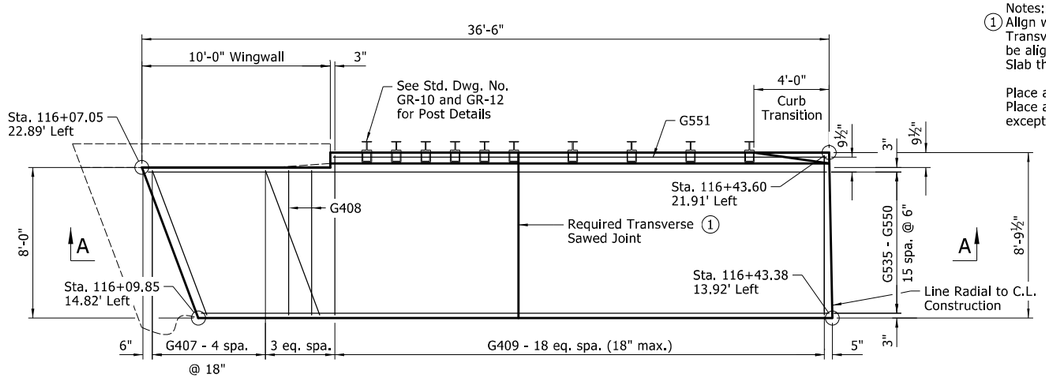

PLAN - TYPE 3 SPECIAL APPROACH GUTTERS

¼" = 1'-0"

Notes:
(1) Allgn wlth Transverse Sawed Joint In Approach Slab. Only 1 Transverse Joint shall be sawed per Gutter and the joint shall be aligned with Transverse Sawed Joint in adjacent Approach Slab that is closest to the center of of the Gutter.

Place all longitudinal steel parallel to adjacent lane taper. Place all transverse steel perpendicular to adjacent lane taper except G407 and G410 bars shall be placed as shown.

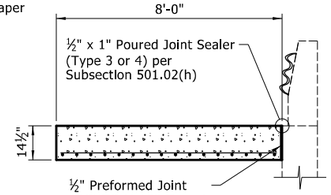

SECTION B-B

⅜" = 1'-0"

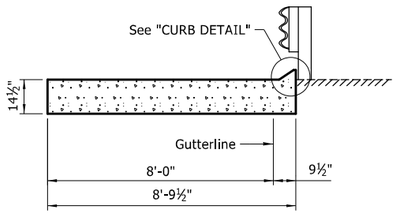

SECTION C-C

⅜" = 1'-0"

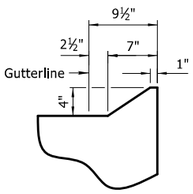

CURB DETAIL

No Scale

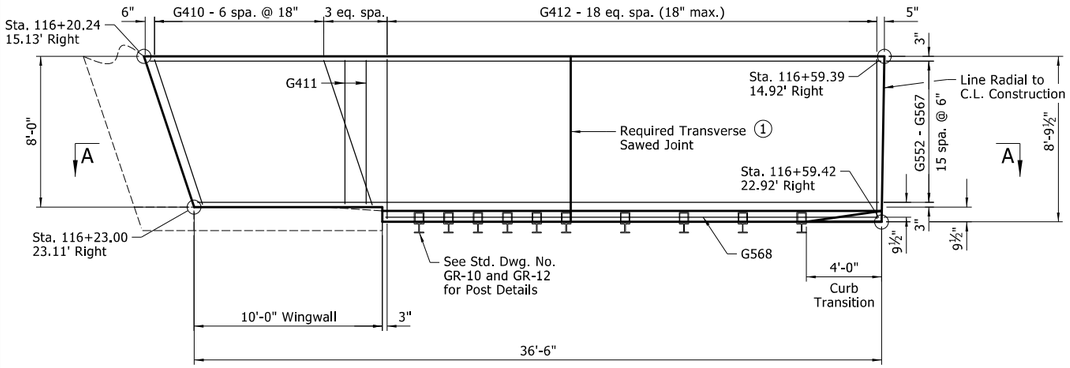

PLAN - TYPE 4 SPECIAL APPROACH GUTTERS

¼" = 1'-0"

BAR LIST FOR TYPE 3 SPECIAL APPROACH GUTTER

MARK	NO. REQ'D	LENGTH	PIN. DIA.
G407	5	8'-2"	Str.
G408	2	7'-8"	Str.
G409	19	8'-5"	Str.
G535 - G550	1 ea.	33'-4" - 36'-0"	Str.
G551	1	26'-2"	Str.

BAR LIST FOR TYPE 4 SPECIAL APPROACH GUTTER

MARK	NO. REQ'D	LENGTH	PIN. DIA.
G410	7	8'-1"	Str.
G411	2	7'-8"	Str.
G412	19	8'-5"	Str.
G552 - G567	1 ea.	36'-2" - 38'-10"	Str.
G568	1	26'-2"	Str.

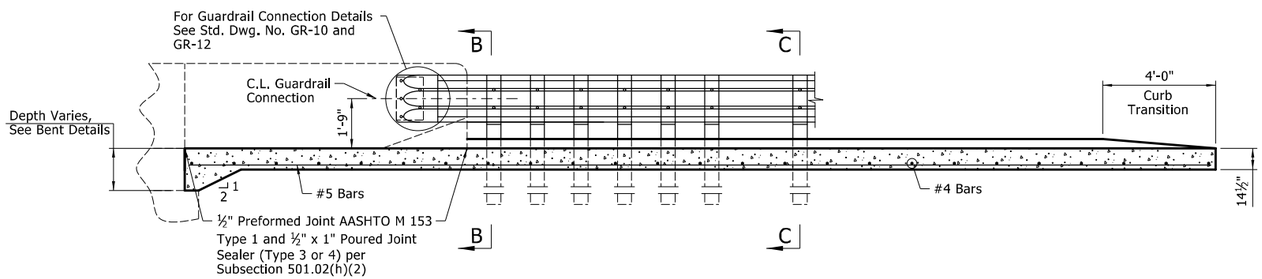

SECTION A-A

⅜" = 1'-0"

QUANTITIES FOR ONE TYPE 3 SPECIAL APPROACH GUTTER

Reinforcing Steel (lbs.)	Concrete (Cu. Yds.)
750	13.71

QUANTITIES FOR ONE TYPE 4 SPECIAL APPROACH GUTTER

Reinforcing Steel (lbs.)	Concrete (Cu. Yds.)
808	14.80

GENERAL NOTES

All concrete shall be Class S(AE) (f'c = 4,000 psi) and shall be poured in the dry.

Reinforcement Steel shall conform to AASHTO M 31 or M 322, Type A with Mill Test Reports, Gr. 60 (fy = 60,000 psi).

Approach Gutters will be measured and paid for in accordance with Section 504 of the Standard Specifications.

Surface finish for Approach Gutters to match that used on the bridge deck.

STATE OF ARKANSAS
REGISTERED PROFESSIONAL ENGINEER
No. 8940
MARK ASHER

12/12/2023

BRIDGE ENGINEER
PRINT DATE: $$DATE$$

DETAILS OF TYPE 3 & 4 SPECIAL APPROACH GUTTERS

ROUTE SECTION

ARKANSAS STATE HIGHWAY COMMISSION

LITTLE ROCK, ARKANSAS

DRAWN BY:	JPC	DATE:	05/2020	FILENAME:	b040781_ag2.dgn
CHECKED BY:	JRS	DATE:	06/2020		
DESIGNED BY:	JPC	DATE:	05/2020	SCALE:	As Shown
BRIDGE NO.	07501		DRAWING NO.		61963

DATE REVISED	DATE FILMED	DATE REVISED	DATE FILMED	FED.RD. DIST.NO.	STATE	FED.AID PROJ.NO.	SHEET NO.	TOTAL SHEETS
				6	ARK.			
				JOB NO.		040781	85	115
				(1) 07501		- APPROACH SLAB 1 -		61964

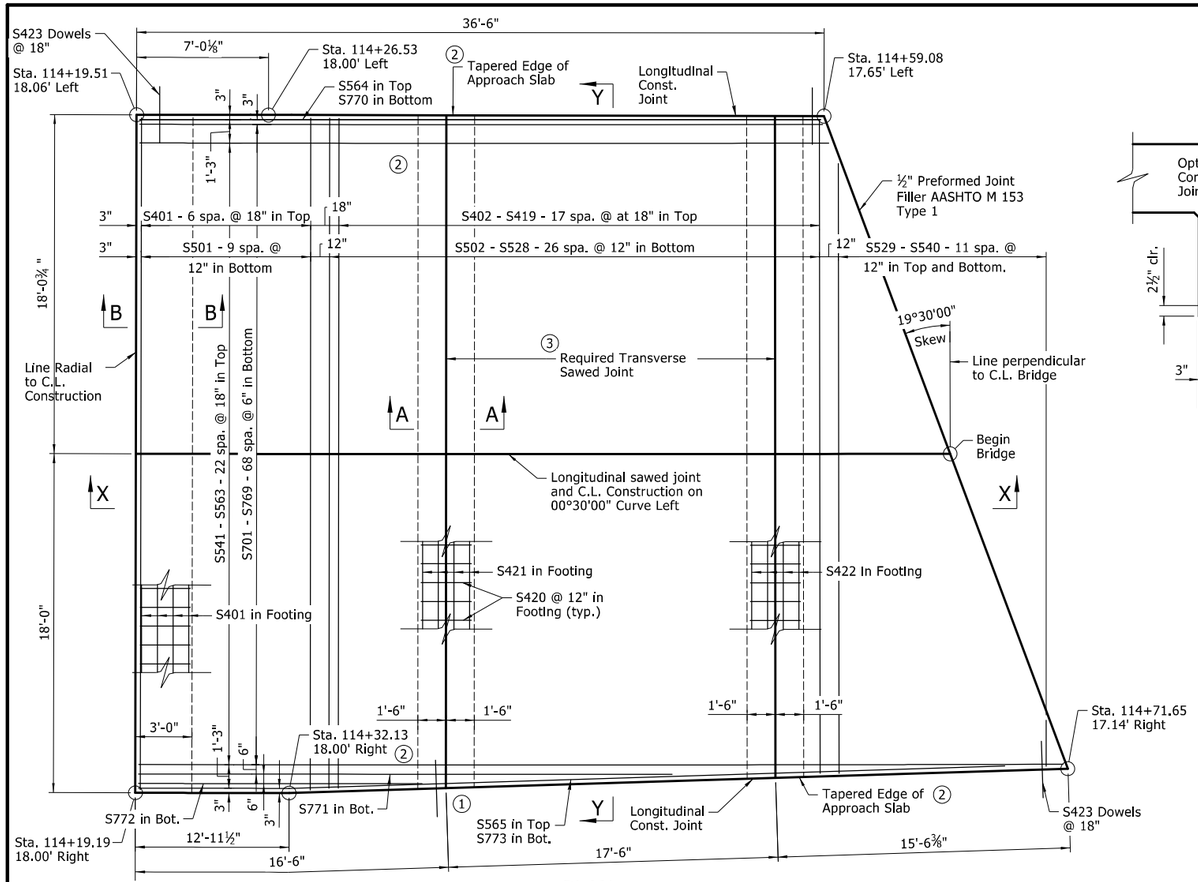

PLAN

¼" = 1'-0"

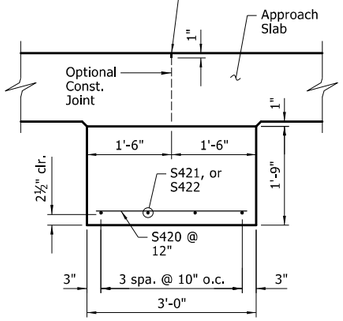

SECTION A-A

¾" = 1'-0"

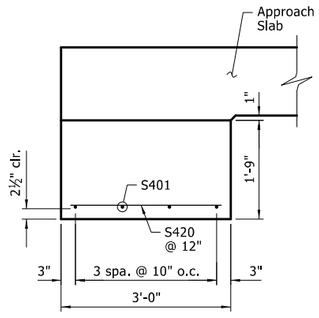

SECTION B-B

¾" = 1'-0"

Notes:
(1) Place longitudinal bars on arcs concentric to C.L. Construction except for bars S565 and S773 which shall be placed as shown. Place transverse bars radial to C.L. Construction.

(2) Turn lane varies from 12'-0" at Sta. 114+30.00 to 0'-0" at Sta. 117+90.00. Longitudinal lines before Sta. 114+30.00 shall be concentric to C.L. Constuction.

(3) Radial to C.L. Construction.

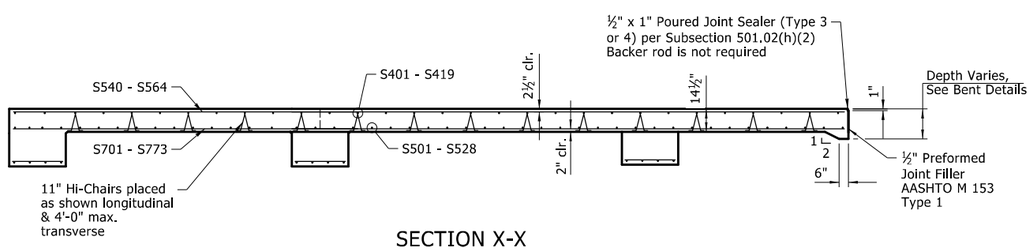

SECTION X-X

¼" = 1'-0"

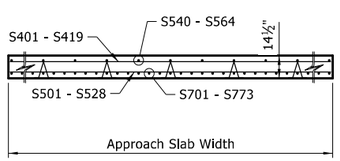

SECTION Y-Y

No Scale

GENERAL NOTES

All concrete shall be Class S(AE) (f'c = 4,000 psi) and shall be poured in the dry.

Reinforcement Steel shall conform to AASHTO M 31 or M 322, Type A with Mill Test Reports, Gr. 60 (fy = 60,000 psi).

Approach Slabs will be measured and paid for in accordance with Section 504 of the Standard Specifications.

Surface finish for Approach Slabs to match that used on the bridge deck.

BAR LIST FOR TYPE 1 SPECIAL APPROACH SLAB

MARK	NO. REQ'D	LENGTH	PIN. DIA.
S401	11	35'-8"	Str.
S402 - S419	1 ea.	35'-7" - 34'-8"	Str.
S420	107	2'-8"	Str.
S421	4	35'-4"	Str.
S422	4	34'-10"	Str.
S423	46	3'-0"	Str.
S501	10	35'-8"	Str.
S502 - S528	1 ea.	35'-7" - 34'-8"	Str.
S529 - S540	1 ea.	32'-4" - 2'-5"	Str.
S541 - S563	1 ea.	49'-1" - 36'-7"	Str.
S564	1	36'-2"	Str.
S565	1	46'-0"	Str.
S701 - S769	1 ea.	49'-1" - 36'-3"	Str.
S770	1	36'-2"	Str.
S771	1	28'-4"	Str.
S772	1	15'-1"	Str.
S773	1	46'-0"	Str.

QUANTITIES FOR ONE TYPE 1 SPECIAL APPROACH SLAB

Slab Width	Reinforcing Steel (lbs.)	Concrete (Cu. Yds.)
Varies - 36'-0" to 34'-9 15/16"	9891	90.65

STATE OF ARKANSAS
REGISTERED PROFESSIONAL ENGINEER
No. 8940
MARK ASHER

12/12/2023

BRIDGE ENGINEER
PRINT DATE: $$DATE$$

DETAILS OF TYPE 1 SPECIAL APPROACH SLAB

ROUTE SECTION

ARKANSAS STATE HIGHWAY COMMISSION

LITTLE ROCK, ARKANSAS

DRAWN BY: JPC DATE: 05/2020 FILENAME: b040781_as1.dgn
CHECKED BY: JRS DATE: 06/2020
DESIGNED BY: JPC DATE: 05/2020 SCALE: As Shown
BRIDGE NO. 07501 DRAWING NO. 61964

DATE REVISED	DATE FILMED	DATE REVISED	DATE FILMED	FED.RD. DIST.NO.	STATE	FED.AID PROJ.NO.	SHEET NO.	TOTAL SHEETS
				6	ARK.			
				JOB NO.		040781	86	115
				(1) 07501		- APPROACH SLAB 2 -		61965

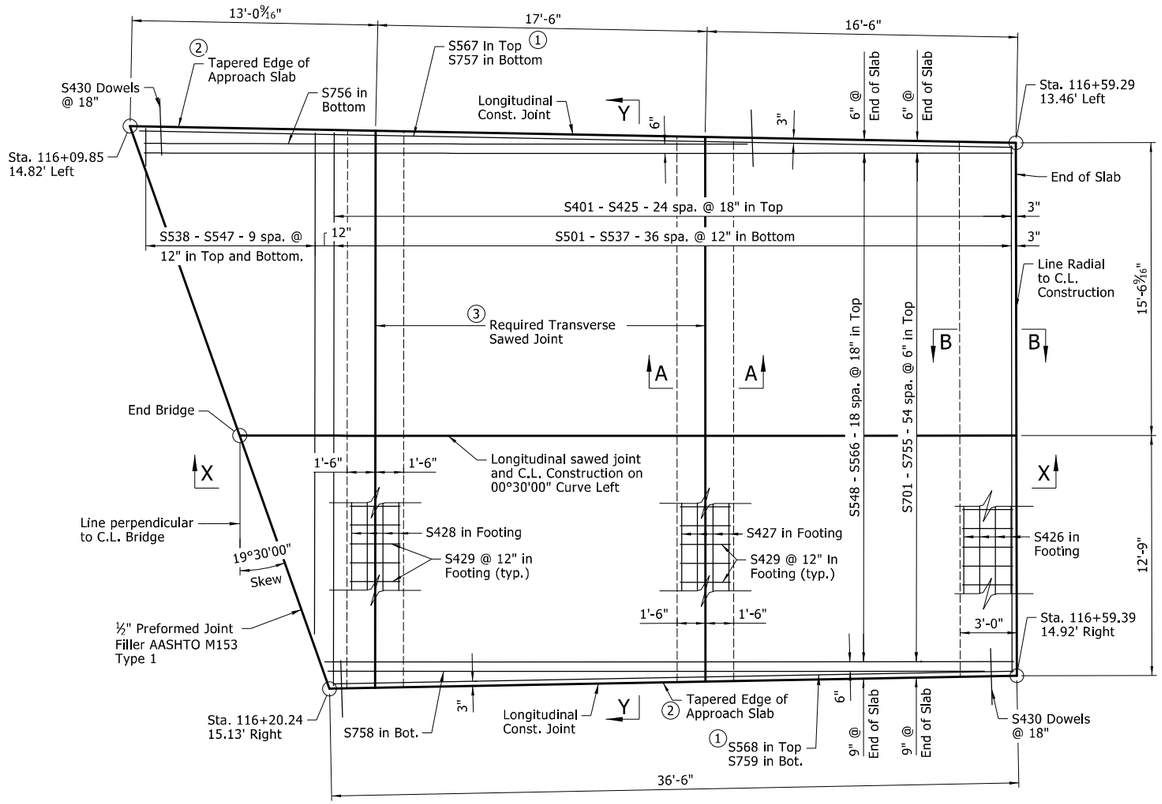

PLAN

¼" = 1'-0"

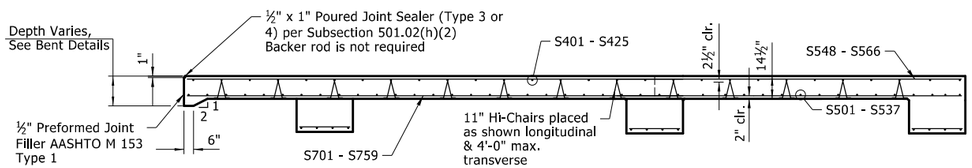

SECTION X-X

¼" = 1'-0"

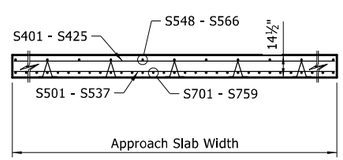

SECTION Y-Y

No Scale

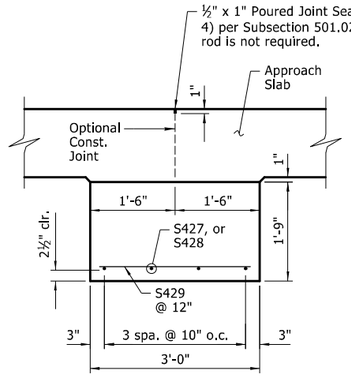

SECTION A-A

¾" = 1'-0"

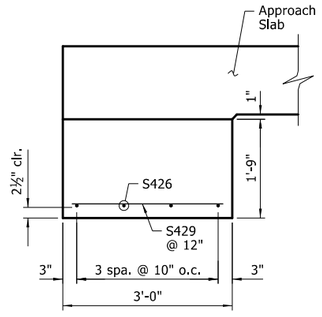

SECTION B-B

¾" = 1'-0"

GENERAL NOTES

All concrete shall be Class S(AE) (f'c = 4,000 psi) and shall be poured in the dry.

Reinforcement Steel shall conform to AASHTO M 31 or M 322, Type A with Mill Test Reports, Gr. 60 (fy = 60,000 psi).

Approach Slabs will be measured and paid for in accordance with Section 504 of the Standard Specifications.

Surface finish for Approach Slabs to match that used on the bridge deck.

Notes:

(1) Place longitudinal bars on arcs concentric to C.L. Construction except for bars S567, S757, S568, and S759 which shall be placed as shown. Place transverse bars radial to C.L. Construction.

(2) Turn lane varies from 12'-0" at Sta. 114+30.00 to 0'-0" at Sta. 117+90.00.

(3) Radial to C.L. Construction.

QUANTITIES FOR ONE TYPE 2 SPECIAL APPROACH SLAB

Slab Width	Reinforcing Steel (lbs.)	Concrete (Cu. Yds.)
Varies - 29'-10 5/16" to 28'-3 3/16"	8223	72.45

BAR LIST FOR TYPE 2 SPECIAL APPROACH SLAB

MARK	NO. REQ'D	LENGTH	PIN. DIA.
S401 - S425	1 ea.	29'-4" - 27'-11"	Str.
S426	4	28'-1"	Str.
S427	4	28'-7"	Str.
S428	4	29'-3"	Str.
S429	88	2'-8"	Str.
S430	46	3'-0"	Str.
S501 - S537	1 ea.	29'-4" - 27'-11"	Str.
S538 - S547	2 ea.	26'-8" - 2'-0"	Str.
S548 - S566	1 ea.	36'-7" - 46'-2"	Str.
S567	1	46'-4"	Str.
S568	1	36'-1"	Str.
S701 - S755	1 ea.	36'-7" - 46'-2"	Str.
S756	1	32'-0"	Str.
S757	1	46'-4"	Str.
S758	1	34'-10"	Str.
S759	1	36'-1"	Str.

STATE OF ARKANSAS
REGISTERED PROFESSIONAL ENGINEER
No. 8940
MARK ASHER

12/12/2023

BRIDGE ENGINEER
PRINT DATE: $$DATE$$

DETAILS OF TYPE 2 SPECIAL APPROACH SLAB

ROUTE SECTION

ARKANSAS STATE HIGHWAY COMMISSION

LITTLE ROCK, ARKANSAS

DRAWN BY: JPC DATE: 05/2020 FILENAME: b040781_as2.dgn
CHECKED BY: JRS DATE: 06/2020
DESIGNED BY: JPC DATE: 05/2020 SCALE: As Shown
BRIDGE NO. 07501 DRAWING NO. 61965

DATE REVISED	DATE REVISED	FED.RD. DIST.NO.	STATE	JOB NO.	SHEET NO.	TOTAL SHEETS
		6	ARK.	040781	87	115
		CROSS SECTIONS				

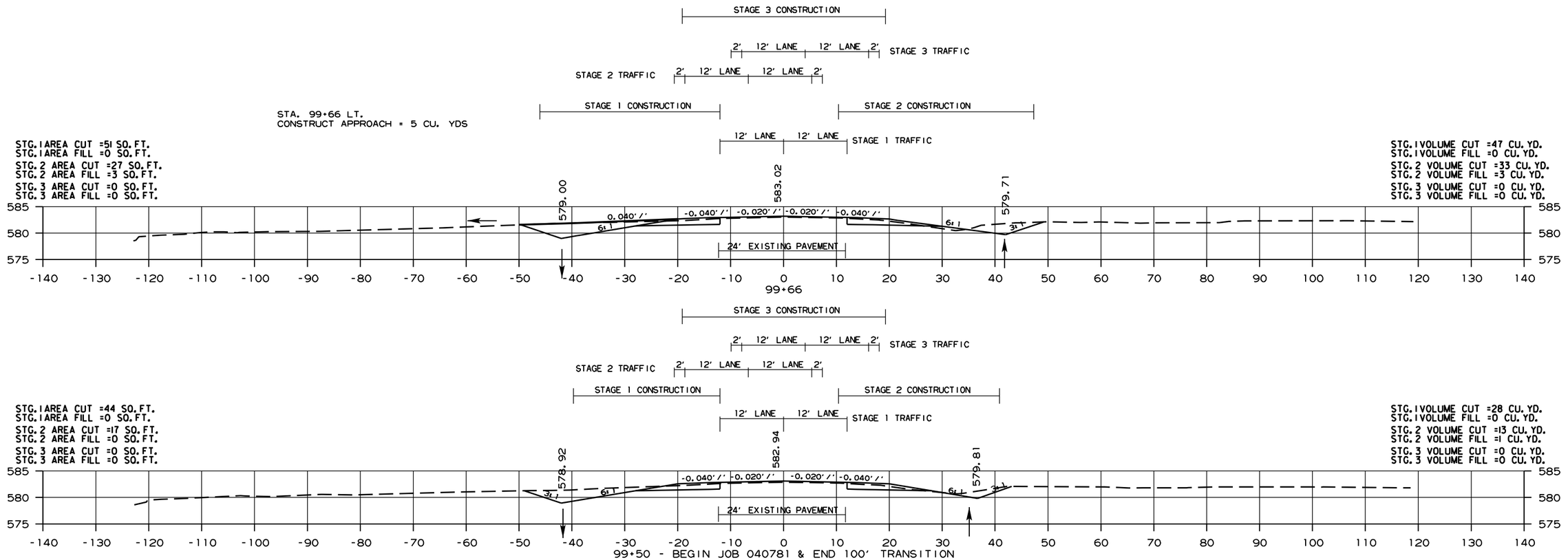

HWY. 71

CROSS SECTION STA. 98+50 TO STA. 99+66

T:\Job\D3337300 ArDot TO 144 Job 040781\TOO CADD Files\770 Roadway Files\References\MOT-YSECTIONSwithnewsurface.dgn
...\MOT-YSECTIONSwithnewsurface.dgn
12/12/2023 12:39:53 PM

DATE REVISED	DATE REVISED	FED.RD. DIST.NO.	STATE	JOB NO.	SHEET NO.	TOTAL SHEETS
		6	ARK.	040781	88	115
		CROSS SECTIONS				

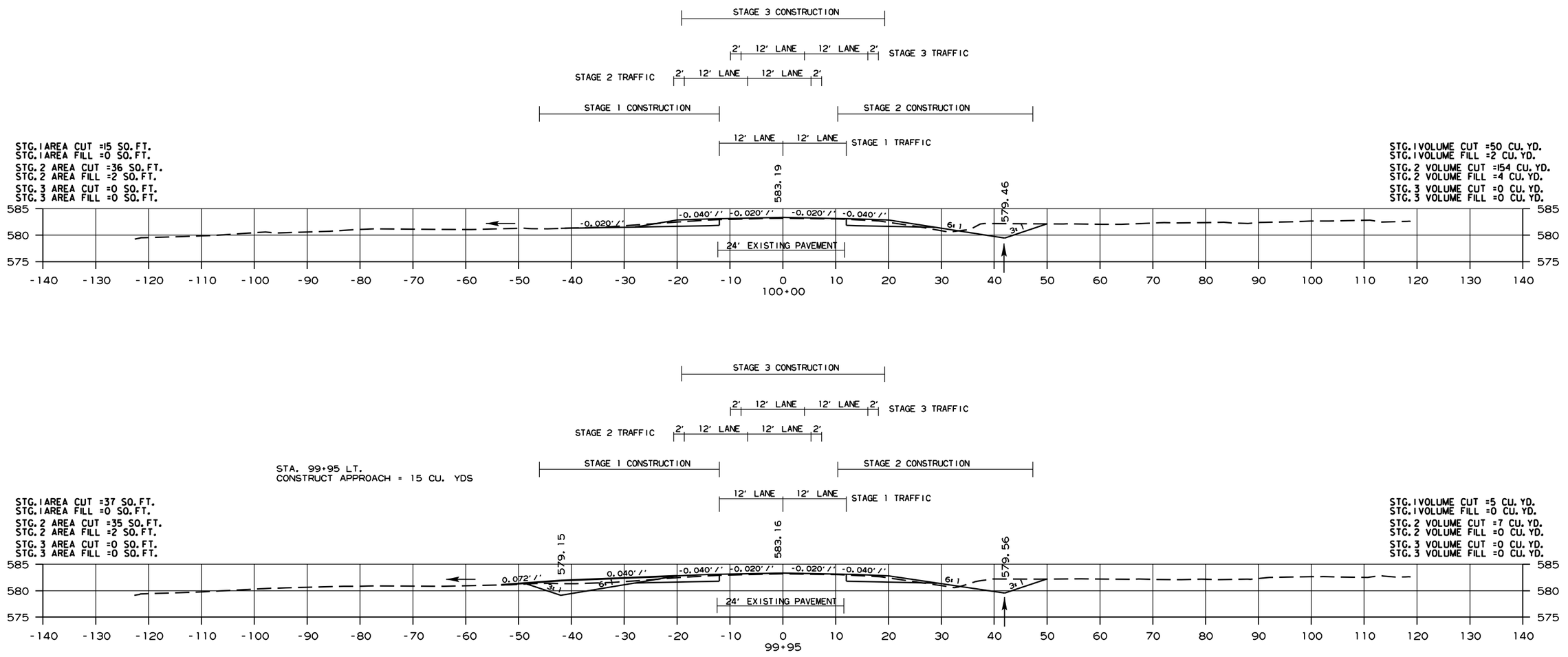

HWY. 71

CROSS SECTION STA. 99+95 TO STA. 100+00

T:\Job\03337300 ardot TO 144 Job 040781\700 CADD Files\770 Roadway Files\References\MOT-XSECTIONSwithnewsurface.dgn
...\MOT-XSECTIONSwithnewsurface.dgn
12/12/2023 12:39:53 PM

DATE REVISED	DATE REVISED	FED.RD. DIST.NO.	STATE	JOB NO.	SHEET NO.	TOTAL SHEETS
		6	ARK.	040781	89	115
		CROSS SECTIONS				

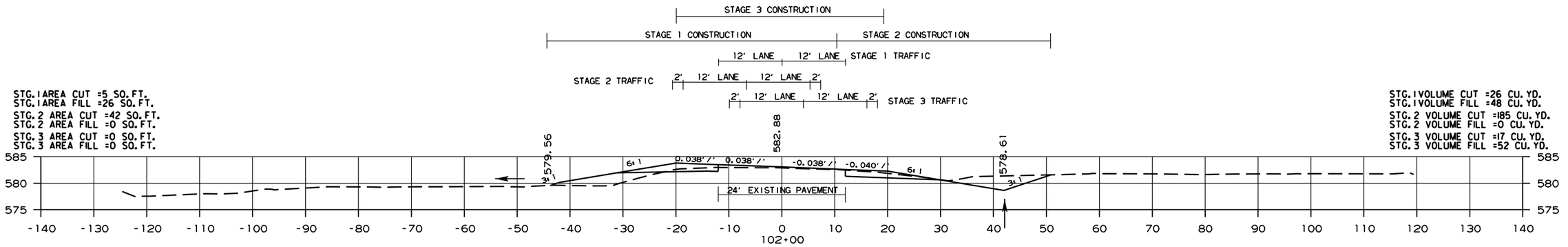

STG. 1 AREA CUT =5 SQ. FT.
STG. 1 AREA FILL =26 SQ. FT.
STG. 2 AREA CUT =42 SQ. FT.
STG. 2 AREA FILL =0 SQ. FT.
STG. 3 AREA CUT =0 SQ. FT.
STG. 3 AREA FILL =0 SQ. FT.

STG. 1 VOLUME CUT =26 CU. YD.
STG. 1 VOLUME FILL =48 CU. YD.
STG. 2 VOLUME CUT =185 CU. YD.
STG. 2 VOLUME FILL =0 CU. YD.
STG. 3 VOLUME CUT =17 CU. YD.
STG. 3 VOLUME FILL =52 CU. YD.

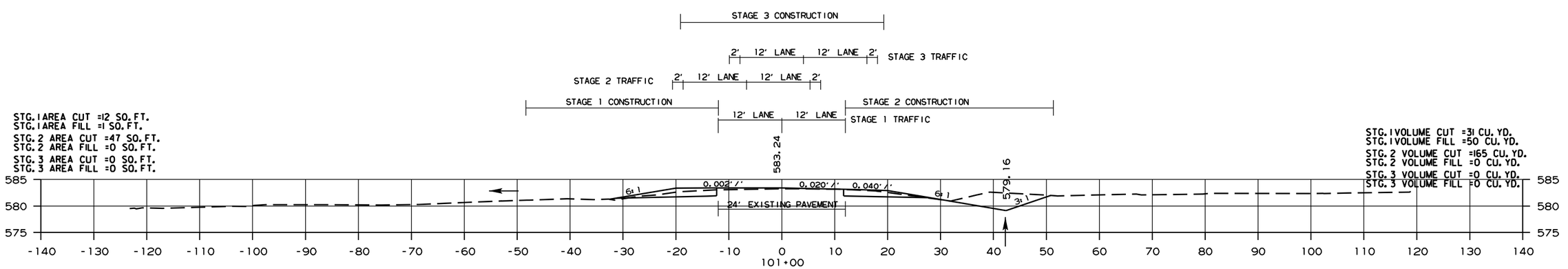

STG. 1 AREA CUT =12 SQ. FT.
STG. 1 AREA FILL =1 SQ. FT.
STG. 2 AREA CUT =47 SQ. FT.
STG. 2 AREA FILL =0 SQ. FT.
STG. 3 AREA CUT =0 SQ. FT.
STG. 3 AREA FILL =0 SQ. FT.

STG. 1 VOLUME CUT =31 CU. YD.
STG. 1 VOLUME FILL =50 CU. YD.
STG. 2 VOLUME CUT =165 CU. YD.
STG. 2 VOLUME FILL =0 CU. YD.
STG. 3 VOLUME CUT =0 CU. YD.
STG. 3 VOLUME FILL =0 CU. YD.

HWY. 71
CROSS SECTION STA. 101+50 TO STA. 102+00

T:\Job\03337300 ArDot TO 144 Job 040781\700 CADD Files\770 Roadway Files\References\MOT-XSECTIONSwithnewsurface.dgn
12/12/2023 12:59:53 PM ...\MOT-XSECTIONSwithnewsurface.dgn

DATE REVISED	DATE REVISED	FED.RD. DIST.NO.	STATE	JOB NO.	SHEET NO.	TOTAL SHEETS
		6	ARK.	040781	90	115
		CROSS SECTIONS				

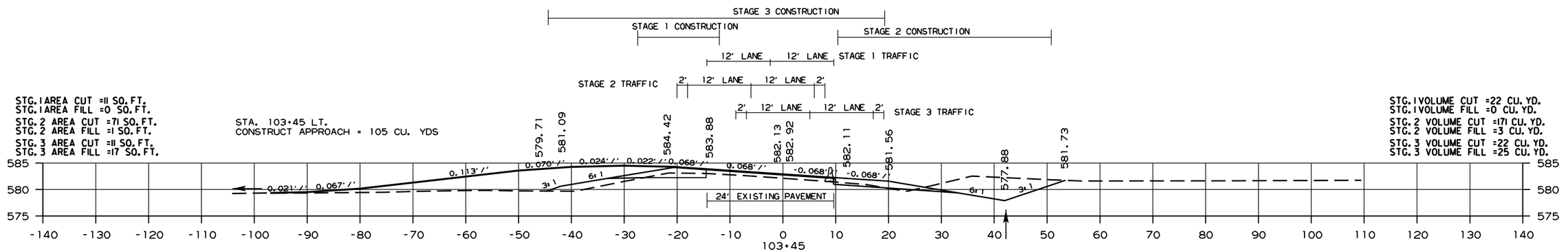

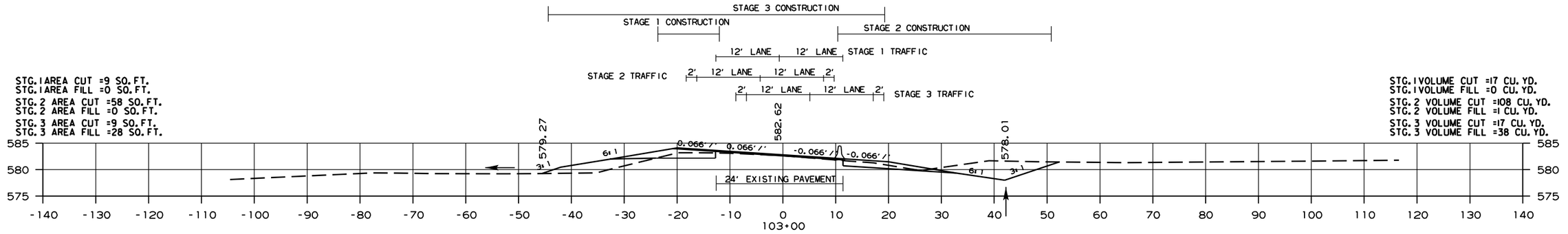

HWY. 71

CROSS SECTION STA. 103+00 TO STA. 103+45

T:\Job\03337300 ardot 10 I44 Job 040781\700 CADD Files\770 Roadway Files\References\MOT-XSECTIONSwithmeansurface.dgn
...\MOT-XSECTIONSwithmeansurface.dgn
12/12/2023 12:39:54 PM

DATE REVISED	DATE REVISED	FED.RD. DIST.NO.	STATE	JOB NO.	SHEET NO.	TOTAL SHEETS
		6	ARK.	040781	91	115
		CROSS SECTIONS				

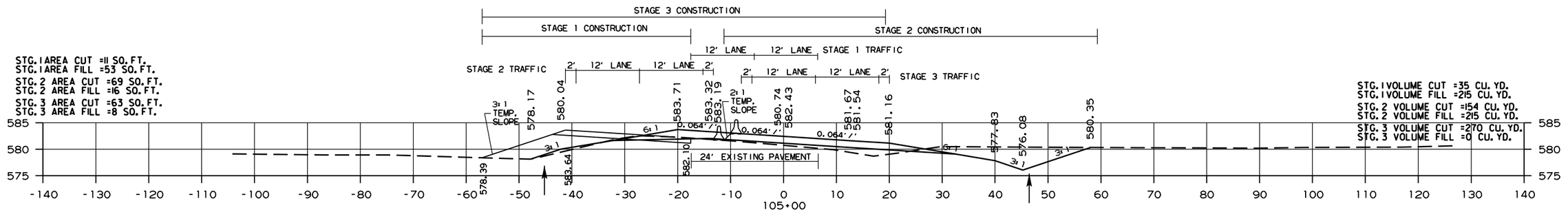

STA. 104+50 RT.
BEGIN DITCH -0.22%
ELEV. 576.19

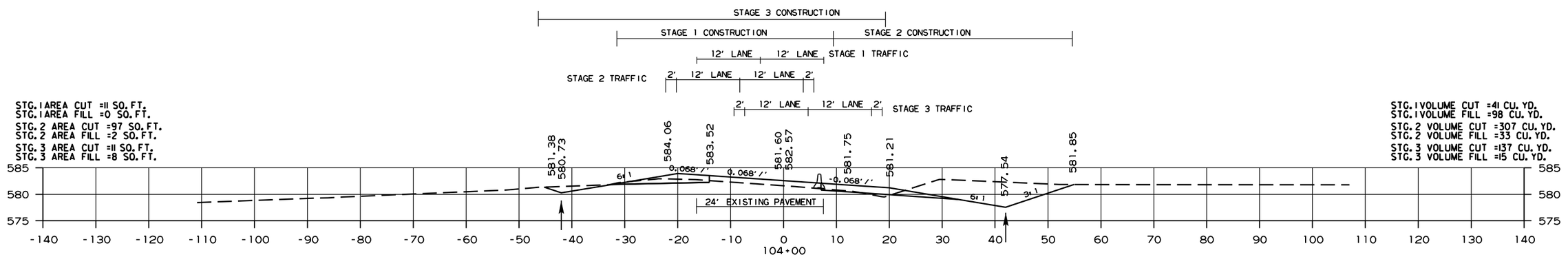

HWY. 71
CROSS SECTION STA. 104+00 TO STA. 105+00

T:\Job\03337300 ArDot T0 144 Job 040781\T00 CADD Files\T70 Roadway Files\References\W01-YSECTIONSwithnewsurface.dgn
02/02/2023 12:39:54 PM ...\W01-YSECTIONSwithnewsurface.dgn

DATE REVISED	DATE REVISED	FED.RD. DIST.NO.	STATE	JOB NO.	SHEET NO.	TOTAL SHEETS
		6	ARK.	040781	92	115
		CROSS SECTIONS				

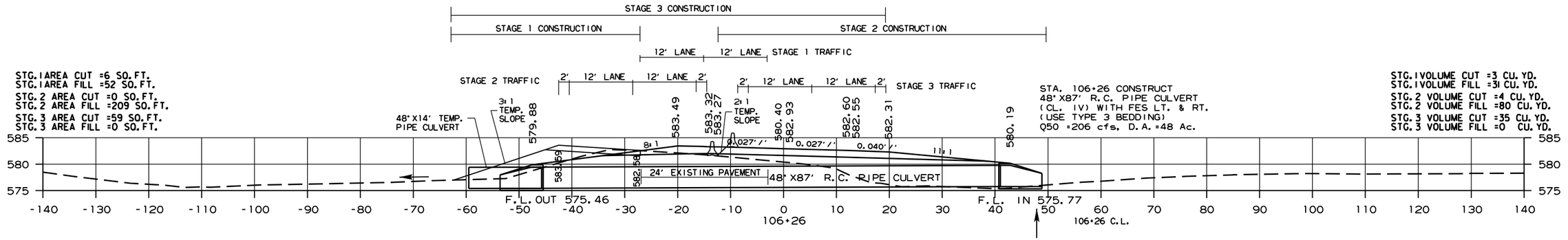

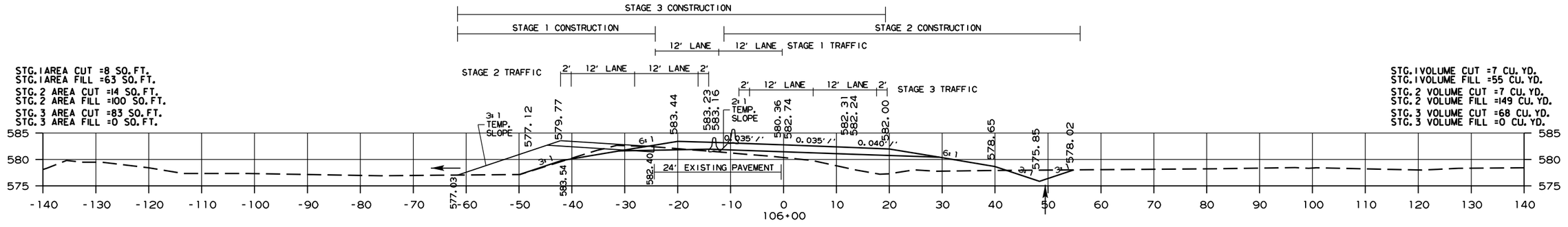

HWY. 71

CROSS SECTION STA. 106+00 TO STA. 106+26

T:\Job\03337300 ArDot 10 144 Job 040781\700 CADD Files\770 Roadway Files\References\MOT-YSECTIONSwithmeasurface.dgn
12/12/2023 12:39:55 PM ...\MOT-YSECTIONSwithmeasurface.dgn

DATE REVISED	DATE REVISED	FED.RD. DIST.NO.	STATE	JOB NO.	SHEET NO.	TOTAL SHEETS
		6	ARK.	040781	93	115
		CROSS SECTIONS				

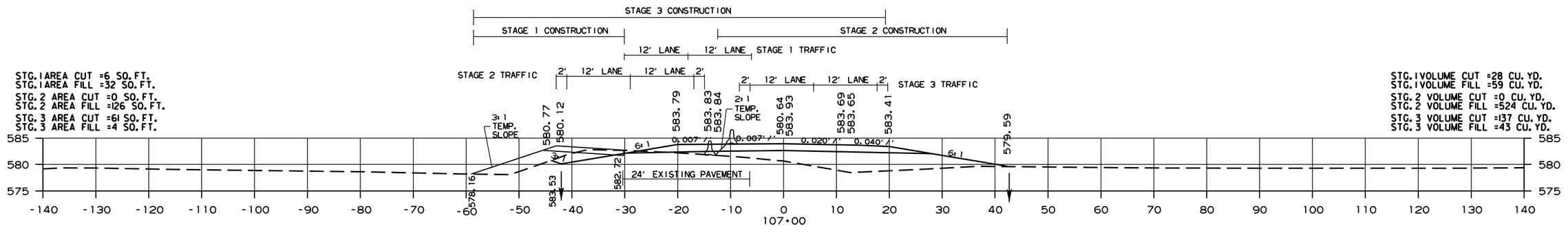

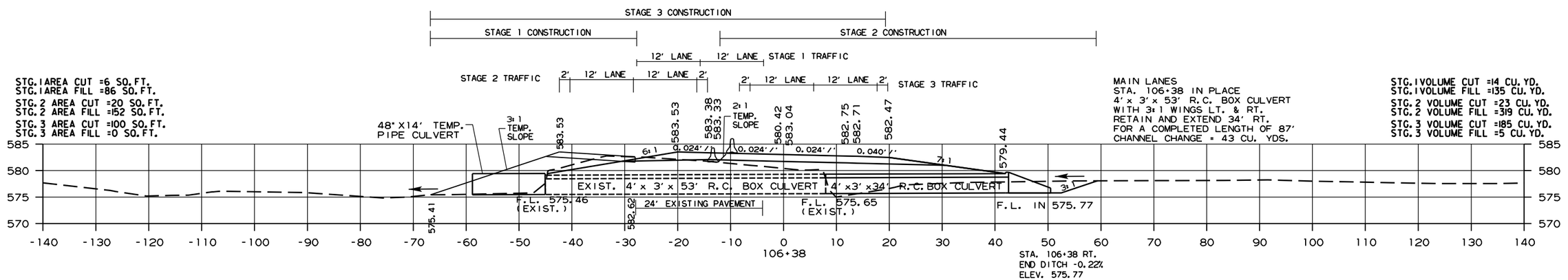

HWY. 71
CROSS SECTION STA. 106+38 TO STA. 107+00.00

T:\Job\D3337300 ArDot 10 I44 Job 040781\700 CADD Files\770 Roadway Files\References\WDT-YSECTIONSwithnewsurface.dgn
02/02/2023 12:39:55 PM ...\WDT-YSECTIONSwithnewsurface.dgn

DATE REVISED	DATE REVISED	FED.RD. DIST.NO.	STATE	JOB NO.	SHEET NO.	TOTAL SHEETS
		6	ARK.	040781	94	115
		CROSS SECTIONS				

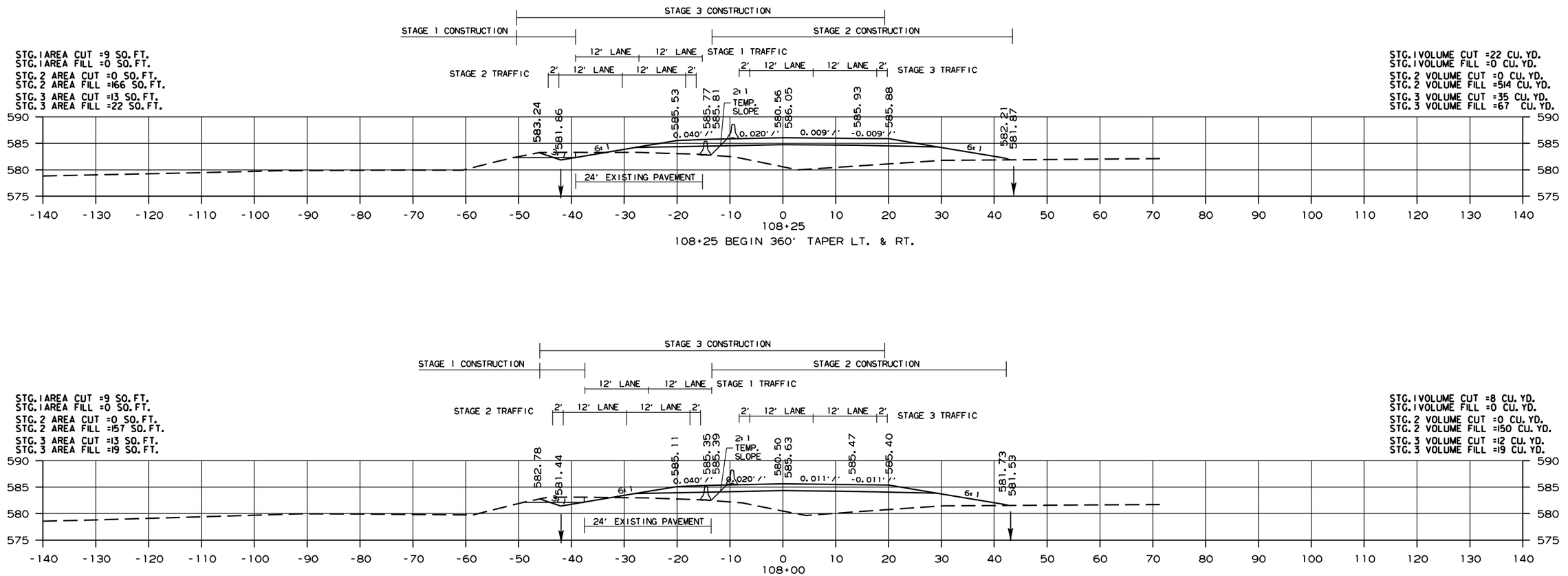

HWY. 71

CROSS SECTION STA. 108+00 TO STA. 108+25

T:\Job\D3337300 ArDot TO 144 Job 040781\700 CADD Files\700 Roadway Files\References\MOT-YSECTIONSwithnewsurface.dgn
02/02/2023 12:39:55 PM ...\MOT-YSECTIONSwithnewsurface.dgn

DATE REVISED	DATE REVISED	FED.RD. DIST.NO.	STATE	JOB NO.	SHEET NO.	TOTAL SHEETS
		6	ARK.	040781	95	115
		CROSS SECTIONS				

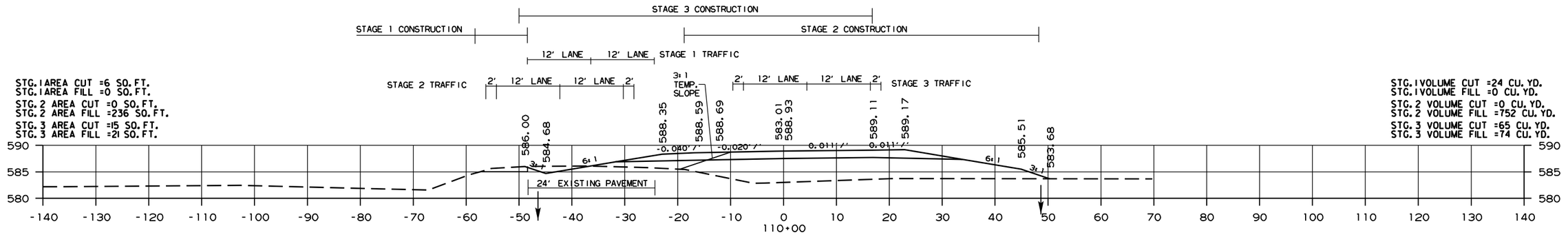

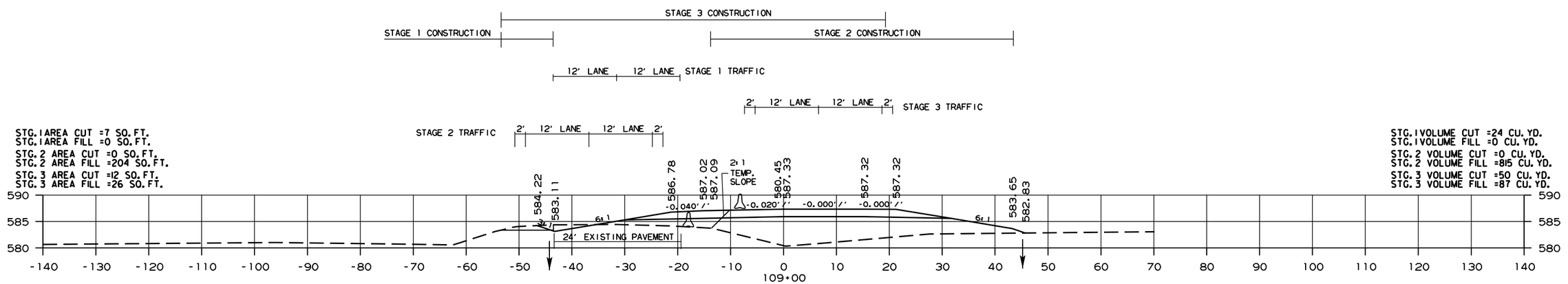

HWY. 71
CROSS SECTION STA. 109+00 TO STA. 110+00

T:\Job\D3337300 ArDot TO 144 Job 040781\700 CADD Files\770 Roadway Files\References\WDT-XSECTIONSwithnewsurface.dgn
02/02/2023 12:39:56 PM ...\WDT-XSECTIONSwithnewsurface.dgn

DATE REVISED	DATE REVISED	FED.RD. DIST.NO.	STATE	JOB NO.	SHEET NO.	TOTAL SHEETS
		6	ARK.	040781	96	115
		CROSS SECTIONS				

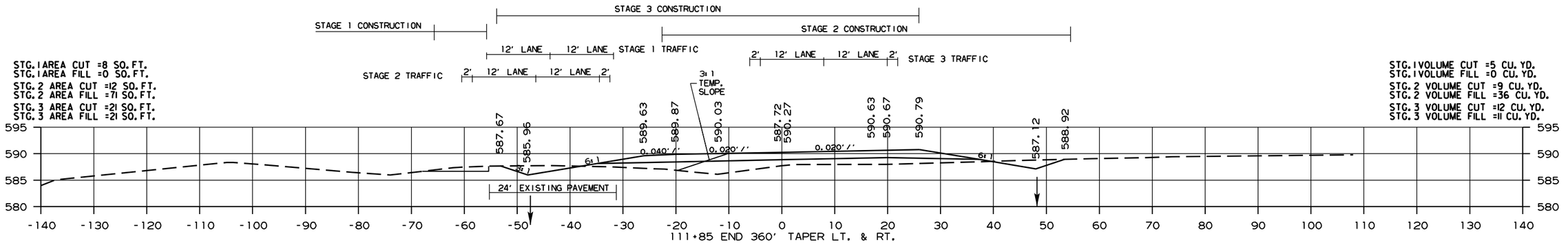

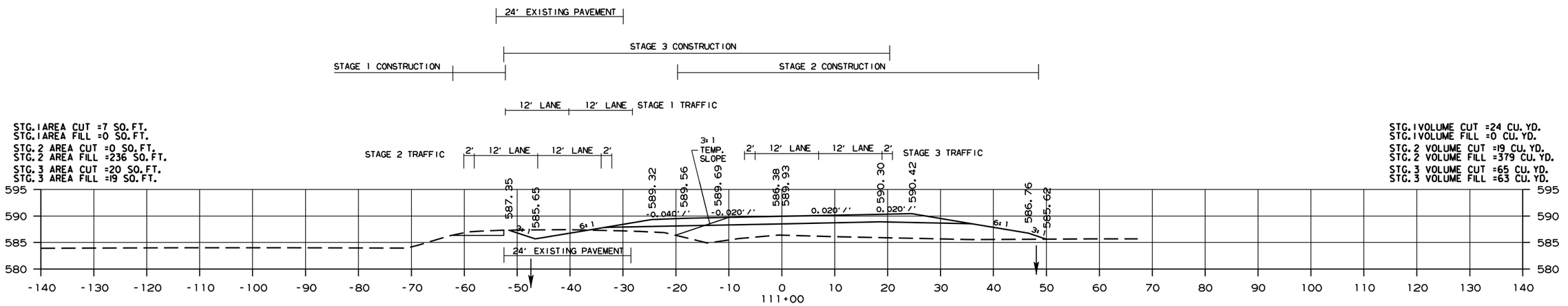

HWY. 71
CROSS SECTION STA. 111+00 TO STA. 111+85

T:\Job\03337300 ArDot TO 144 Job 040781\T00 CADD Files\T70 Roadway Files\References\W01-XSECTIONSwithnewsurface.dgn
...\W01-XSECTIONSwithnewsurface.dgn
12/12/2023 12:39:57 PM

DATE REVISED	DATE REVISED	FED.RD. DIST.NO.	STATE	JOB NO.	SHEET NO.	TOTAL SHEETS
		6	ARK.	040781	97	115
		CROSS SECTIONS				

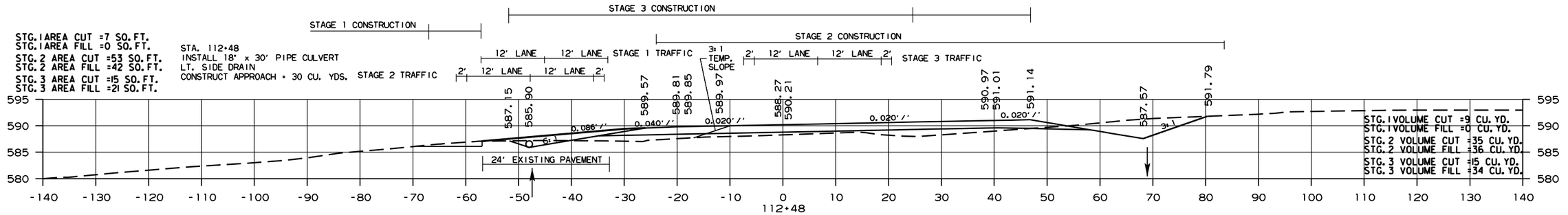

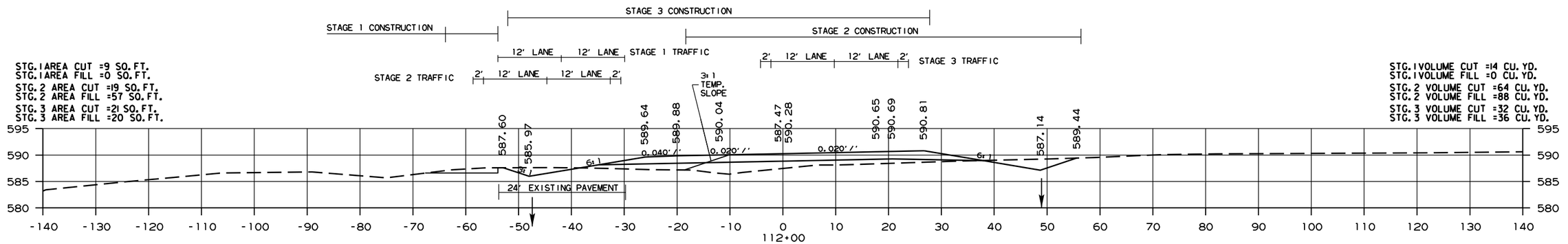

HWY. 71
CROSS SECTION STA. 112+00 TO STA. 112+48

T:\Job\D3337300 ArDot TO 144 Job 040781\700 CADD Files\770 Roadway Files\References\WDT-YSECTIONSwithnewsurface.dgn
...\WDT-YSECTIONSwithnewsurface.dgn
12/12/2023 12:39:57 PM

DATE REVISED	DATE REVISED	FED.RD. DIST.NO.	STATE	JOB NO.	SHEET NO.	TOTAL SHEETS
		6	ARK.	040781	98	115
		CROSS SECTIONS				

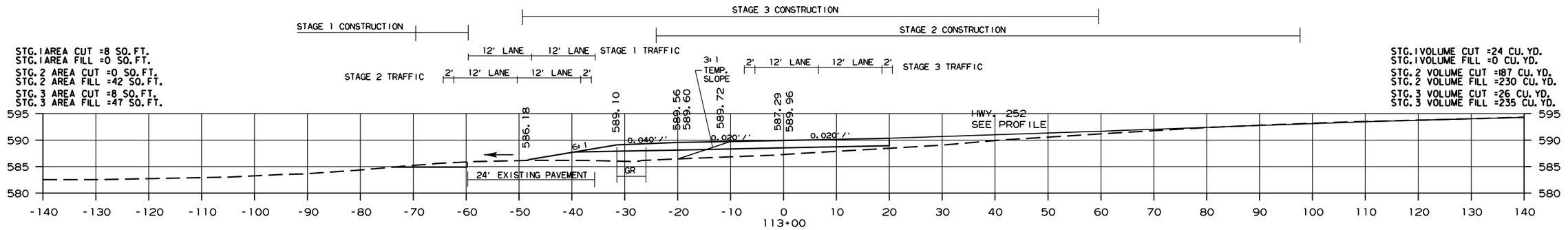

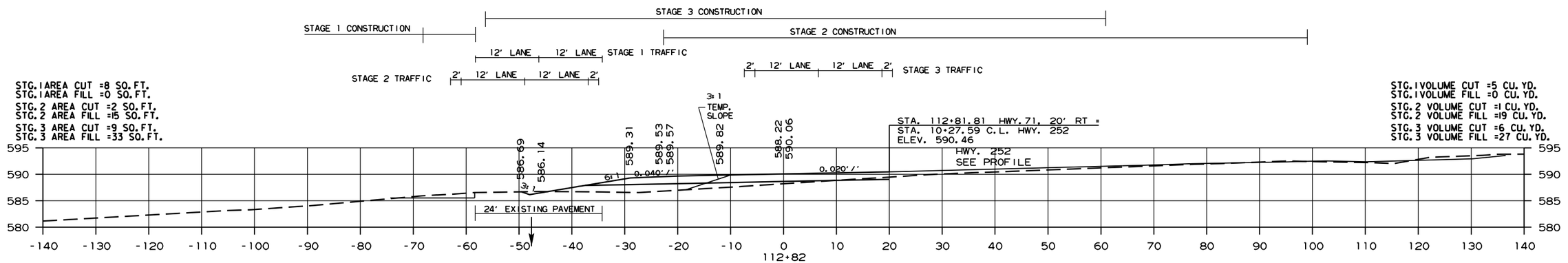

HWY. 71
CROSS SECTION STA. 112+82 TO STA. 113+00

T:\Job\D3337300 ArDot TO 144 Job 040781\700 CADD Files\770 Roadway Files\References\WDT-XSECTIONSwithnewsurface.dgn
12/12/2023 12:39:57 PM ...\WDT-XSECTIONSwithnewsurface.dgn

DATE REVISED	DATE REVISED	FED.RD. DIST.NO.	STATE	JOB NO.	SHEET NO.	TOTAL SHEETS
		6	ARK.	040781	99	115
		CROSS SECTIONS				

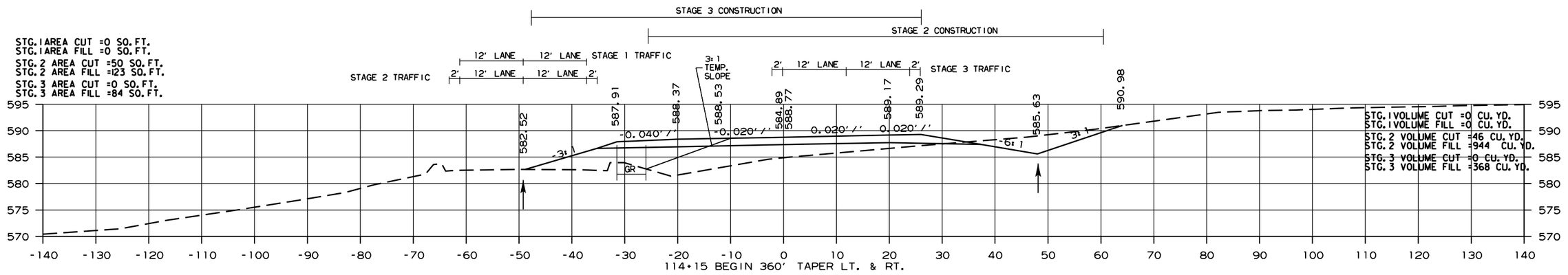

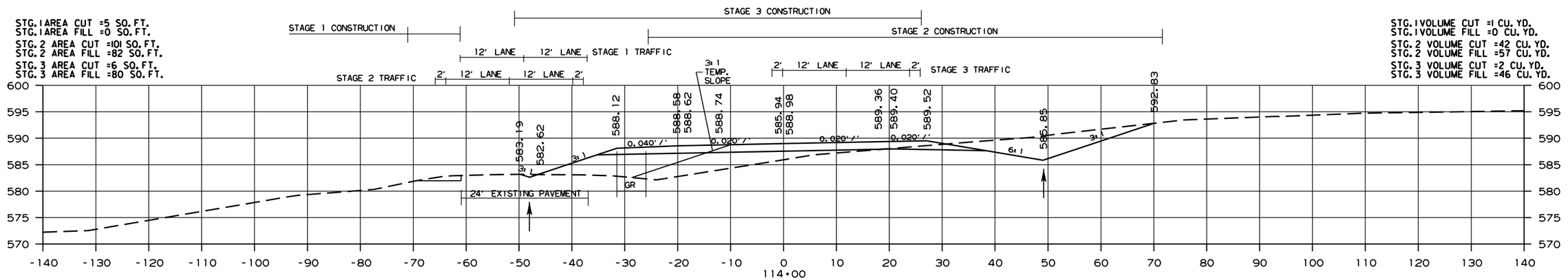

HWY. 71
CROSS SECTION STA. 114+00 TO STA. 114+15

T:\Job\D3337300 ArDot T0 144 Job 040781\T00 CADD Files\T70 Roadway Files\References\W01-YSECTIONSwithnewsurface.dgn
2/2/2023 12:39:58 PM ...\W01-YSECTIONSwithnewsurface.dgn

DATE REVISED	DATE REVISED	FED.RD. DIST.NO.	STATE	JOB NO.	SHEET NO.	TOTAL SHEETS
		6	ARK.	040781	100	115
		CROSS SECTIONS				

STA. 114+65.47 BRIDGE END
BRIDGE NO. 07501
148'-4" INTEGRAL PRESTRESSED CONC.
GIRDER UNIT TYPE II (49'-3", 49'-10", 49'-3")
149'-6 3/8" X VAR. WIDTH CLEAR ROADWAY
19°30' RT. FORWARD SKEW
149'-6 3/8" BRIDGE LENGTH (49'-3", 49'-10", 49'-3")
STA. 116+15.00 BRIDGE END

STG.1 AREA CUT =0 SQ.FT.
STG.1 AREA FILL =0 SQ.FT.
STG.2 AREA CUT =0 SQ.FT.
STG.2 AREA FILL =0 SQ.FT.
STG.3 AREA CUT =0 SQ.FT.
STG.3 AREA FILL =0 SQ.FT.

STG.1 VOLUME CUT =0 CU.YD.
STG.1 VOLUME FILL =0 CU.YD.
STG.2 VOLUME CUT =0 CU.YD.
STG.2 VOLUME FILL =0 CU.YD.
STG.3 VOLUME CUT =0 CU.YD.
STG.3 VOLUME FILL =0 CU.YD.

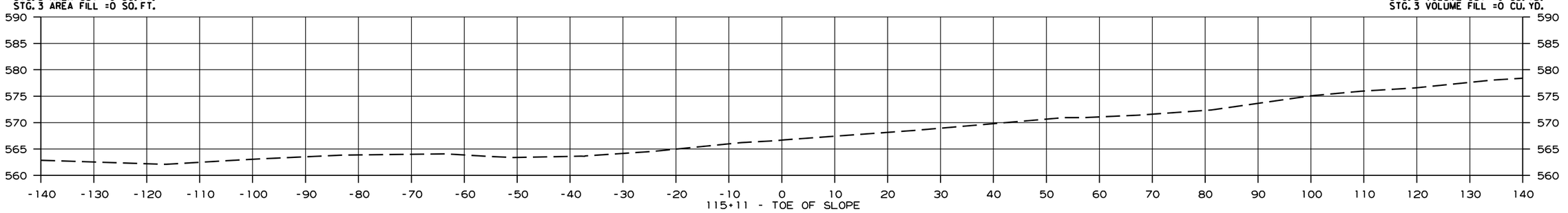

STAGE 3 CONSTRUCTION
STAGE 2 CONSTRUCTION
STAGE 2 TRAFFIC: 2' 12' LANE 12' LANE 2'
12' LANE 12' LANE STAGE 1 TRAFFIC
2' 12' LANE 12' LANE 2' STAGE 3 TRAFFIC

STG.1 AREA CUT =0 SQ.FT.
STG.1 AREA FILL =0 SQ.FT.
STG.2 AREA CUT =0 SQ.FT.
STG.2 AREA FILL =897 SQ.FT.
STG.3 AREA CUT =0 SQ.FT.
STG.3 AREA FILL =313 SQ.FT.

STG.1 VOLUME CUT =0 CU.YD.
STG.1 VOLUME FILL =0 CU.YD.
STG.2 VOLUME CUT =0 CU.YD.
STG.2 VOLUME FILL =764 CU.YD.
STG.3 VOLUME CUT =0 CU.YD.
STG.3 VOLUME FILL =267 CU.YD.

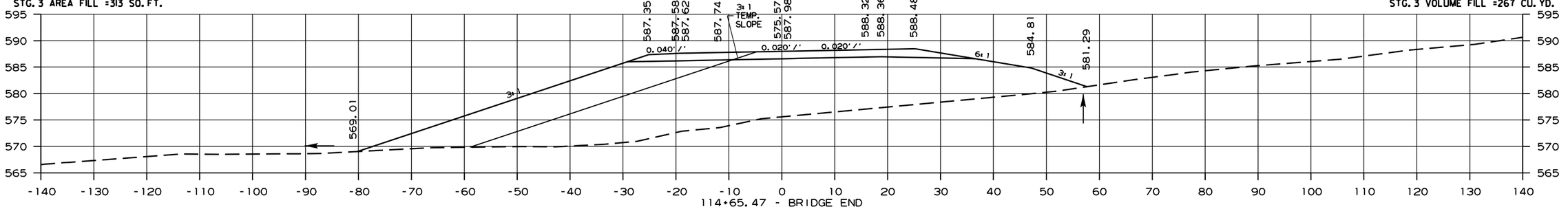

HWY. 71
CROSS SECTION STA. 114+65 TO STA. 115+11

T:\Job\03337300 ArDot TO 144 Job 040781\700 CADD Files\770 Roadway Files\References\WDT-XSECTIONSwithnewsurface.dgn
02/02/2023 12:39:58 PM ...\WDT-XSECTIONSwithnewsurface.dgn

DATE REVISED	DATE REVISED	FED.RD. DIST.NO.	STATE	JOB NO.	SHEET NO.	TOTAL SHEETS
		6	ARK.	040781	101	115
		CROSS SECTIONS				

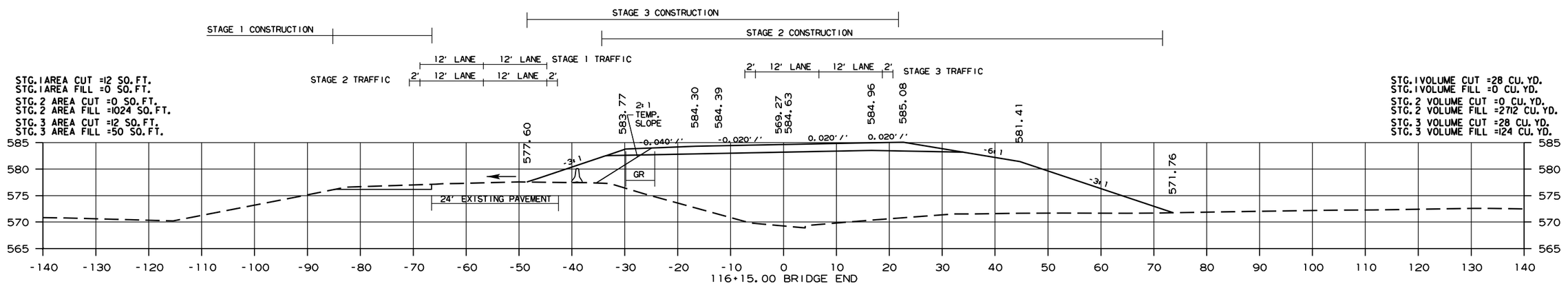

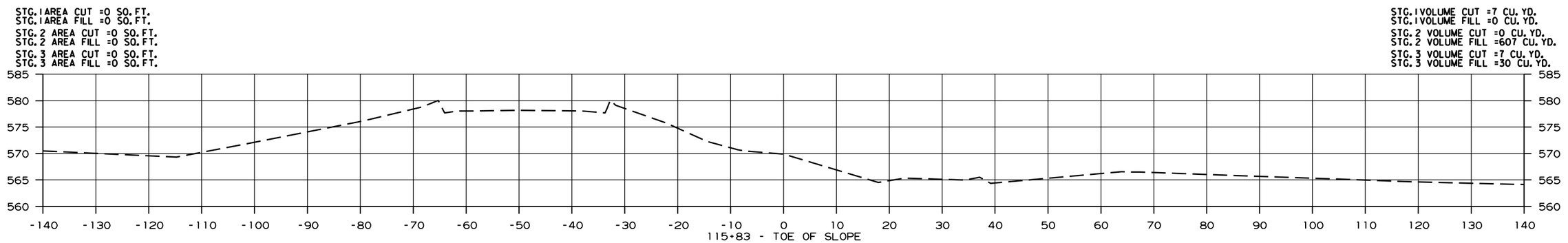

HWY. 71
CROSS SECTION STA. 115+83 TO STA. 116+15

T:\Job\03337300 ArDot TO 144 Job 040781\700 CADD Files\770 Roadway Files\References\MOT-XSECTIONSwithnewsurface.dgn
12/12/2023 12:39:58 PM ...\MOT-XSECTIONSwithnewsurface.dgn

DATE REVISED	DATE REVISED	FED.RD. DIST.NO.	STATE	JOB NO.	SHEET NO.	TOTAL SHEETS
		6	ARK.	040781	102	115
		CROSS SECTIONS				

STG. 1 AREA CUT =6 SQ. FT.
STG. 1 AREA FILL =0 SQ. FT.
STG. 2 AREA CUT =0 SQ. FT.
STG. 2 AREA FILL =699 SQ. FT.
STG. 3 AREA CUT =6 SQ. FT.
STG. 3 AREA FILL =29 SQ. FT.

STG. 1 VOLUME CUT =17 CU. YD.
STG. 1 VOLUME FILL =0 CU. YD.
STG. 2 VOLUME CUT =0 CU. YD.
STG. 2 VOLUME FILL =1744 CU. YD.
STG. 3 VOLUME CUT =17 CU. YD.
STG. 3 VOLUME FILL =68 CU. YD.

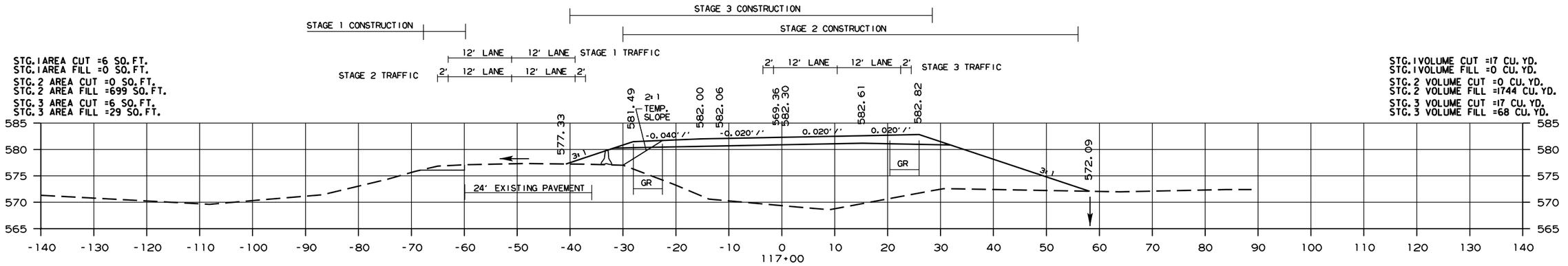

HWY. 71
CROSS SECTION STA. 117+00

T:\Job\03337300 ArDot TO 144 Job 040781\700 CADD Files\700 CADD Files\References\MOT-XSECTIONSwithmesurface.dgn
12/12/2023 12:39:59 PM ...\MOT-XSECTIONSwithmesurface.dgn

DATE REVISED	DATE REVISED	FED.RD. DIST.NO.	STATE	JOB NO.	SHEET NO.	TOTAL SHEETS
		6	ARK.	040781	103	115
		CROSS SECTIONS				

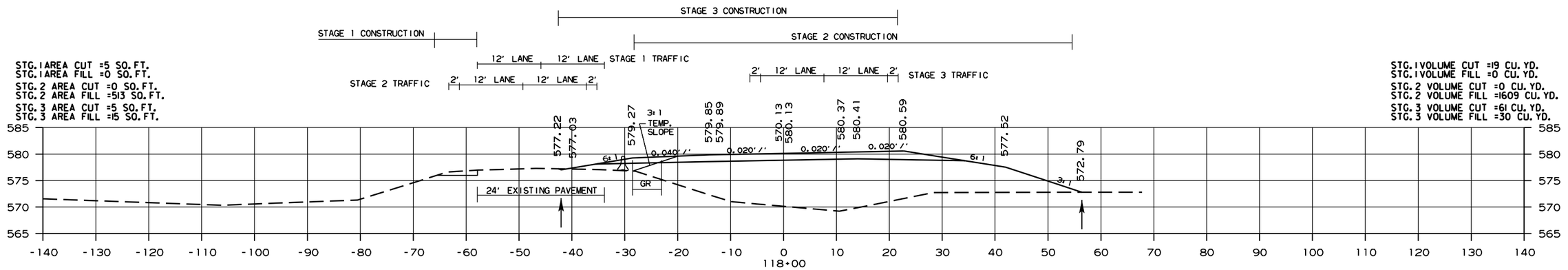

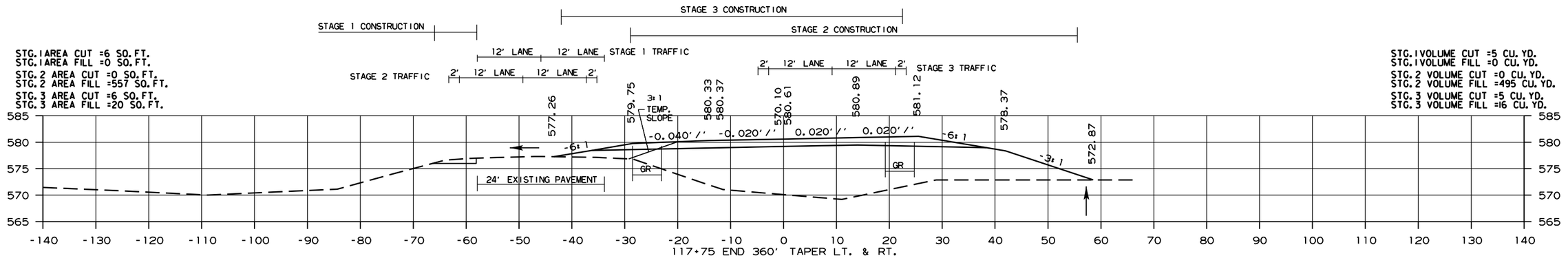

HWY. 71

CROSS SECTION STA. 117+75 TO STA. 118+00

T:\Job\03337300 ArDot TO 144 Job 040781\700 CADD Files\770 Roadway Files\References\MOT-XSECTIONSwithnewsurface.dgn
12/12/2023 12:39:59 PM ...\MOT-XSECTIONSwithnewsurface.dgn

DATE REVISED	DATE REVISED	FED.RD. DIST.NO.	STATE	JOB NO.	SHEET NO.	TOTAL SHEETS
		6	ARK.	040781	104	115
		CROSS SECTIONS				

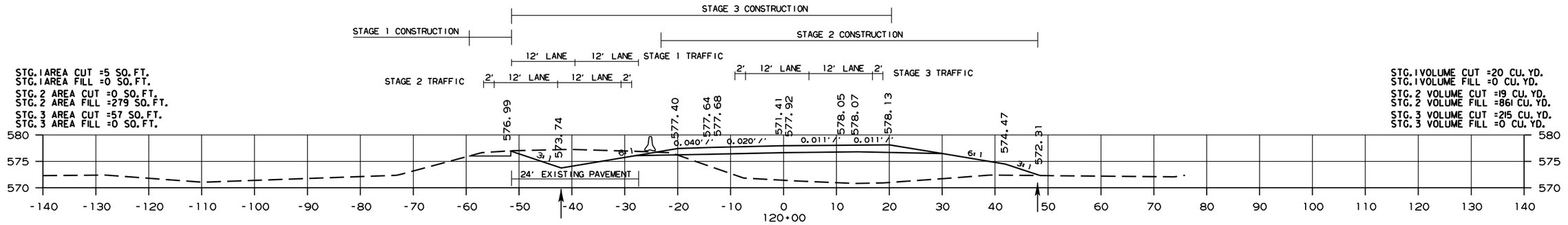

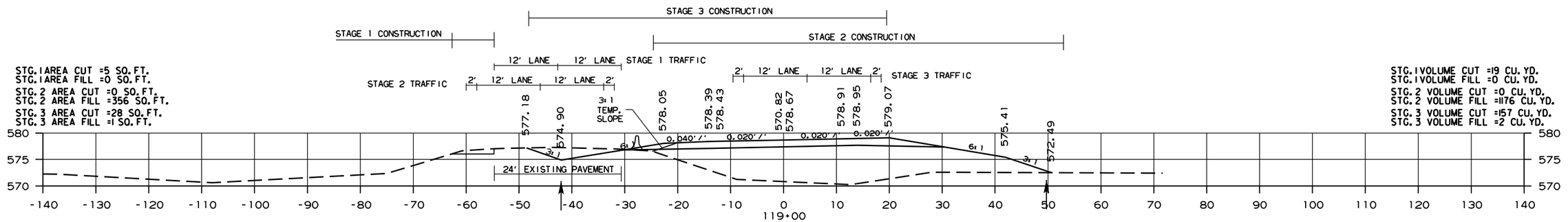

HWY. 71
CROSS SECTION STA. 119+00 TO STA. 120+00

T:\Job\D3337300 ArDot TO 144 Job 040781\TOO CADD Files\770 Roadway Files\References\MOT-YSECTIONSwithnewsurface.dgn
12/12/2023 12:40:00 PM ...\MOT-YSECTIONSwithnewsurface.dgn

DATE REVISED	DATE REVISED	FED.RD. DIST.NO.	STATE	JOB NO.	SHEET NO.	TOTAL SHEETS
		6	ARK.	040781	105	115
		CROSS SECTIONS				

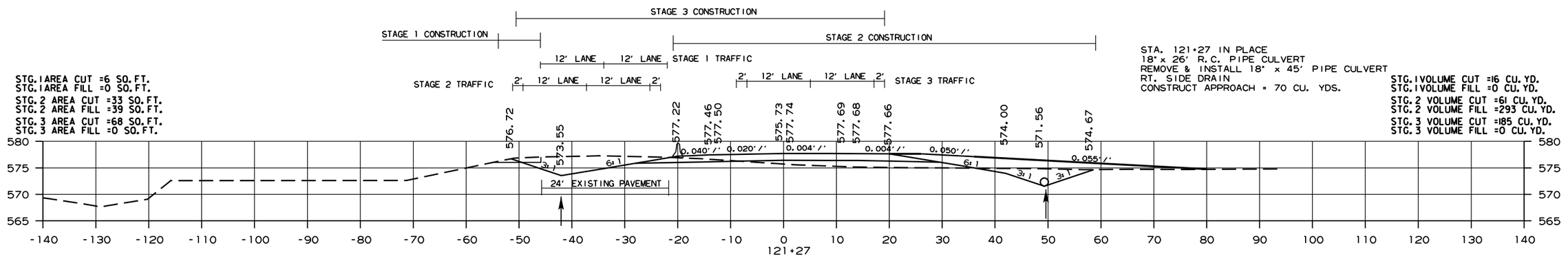

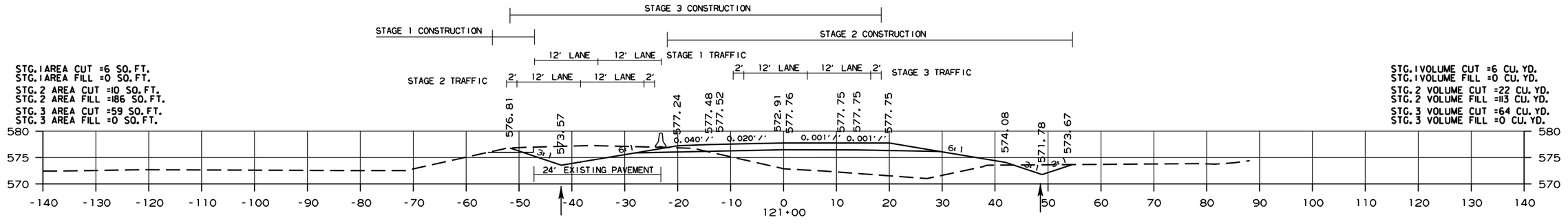

STA. 120+50 RT.
BEGIN DITCH -0.83%
ELEV. 572.20

HWY. 71
CROSS SECTION STA. 121+00 TO STA. 121+27

T:\Job\03337300 ArDot TO 144 Job 040781\700 CADD Files\770 Roadway Files\References\MOT-XSECTIONSwithnewsurface.dgn
12/12/2023 12:40:00 PM ...\MOT-XSECTIONSwithnewsurface.dgn

DATE REVISED	DATE REVISED	FED.RD. DIST.NO.	STATE	JOB NO.	SHEET NO.	TOTAL SHEETS
		6	ARK.	040781	106	115
		CROSS SECTIONS				

STA. 123+50 LT.
END DITCH -4.00%
ELEV. 569.43

STA. 123+50 RT.
END DITCH -0.83%
BEGIN DITCH -2.13%
ELEV. 569.70

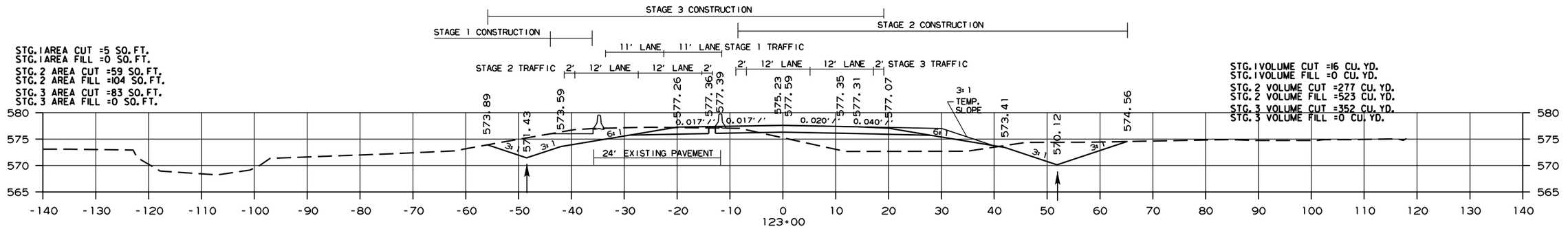

STG.1 AREA CUT =5 SQ.FT.
STG.1 AREA FILL =0 SQ.FT.
STG.2 AREA CUT =59 SQ.FT.
STG.2 AREA FILL =104 SQ.FT.
STG.3 AREA CUT =83 SQ.FT.
STG.3 AREA FILL =0 SQ.FT.

STG.1 VOLUME CUT =16 CU.YD.
STG.1 VOLUME FILL =0 CU.YD.
STG.2 VOLUME CUT =277 CU.YD.
STG.2 VOLUME FILL =523 CU.YD.
STG.3 VOLUME CUT =352 CU.YD.
STG.3 VOLUME FILL =0 CU.YD.

STA. 122+50 LT.
BEGIN DITCH -4.00%
ELEV. 573.43

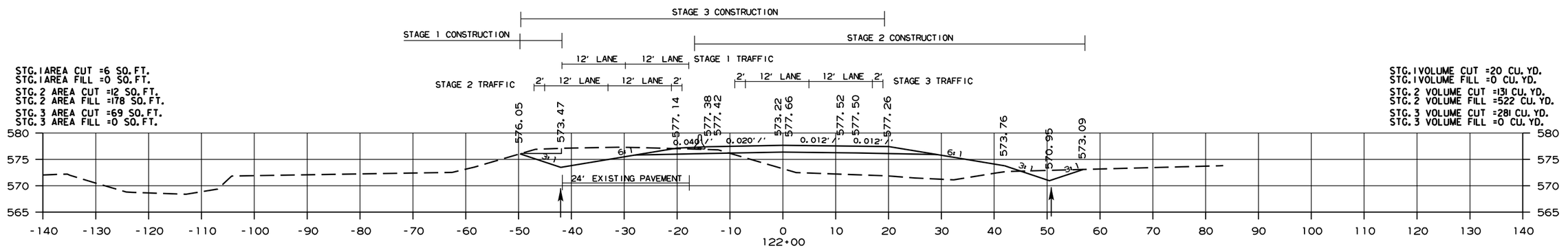

STG.1 AREA CUT =6 SQ.FT.
STG.1 AREA FILL =0 SQ.FT.
STG.2 AREA CUT =12 SQ.FT.
STG.2 AREA FILL =178 SQ.FT.
STG.3 AREA CUT =69 SQ.FT.
STG.3 AREA FILL =0 SQ.FT.

STG.1 VOLUME CUT =20 CU.YD.
STG.1 VOLUME FILL =0 CU.YD.
STG.2 VOLUME CUT =131 CU.YD.
STG.2 VOLUME FILL =522 CU.YD.
STG.3 VOLUME CUT =281 CU.YD.
STG.3 VOLUME FILL =0 CU.YD.

HWY. 71
CROSS SECTION STA. 122+00 TO STA. 123+00

T:\Job\D3337300 ArDot TO 144 Job 040781\700 CADD Files\770 Roadway Files\References\WDT-YSECTIONSwithnewsurface.dgn
12/12/2023 12:40:00 PM ...\WDT-YSECTIONSwithnewsurface.dgn

DATE REVISED	DATE REVISED	FED.RD. DIST.NO.	STATE	JOB NO.	SHEET NO.	TOTAL SHEETS
		6	ARK.	040781	107	115
		CROSS SECTIONS				

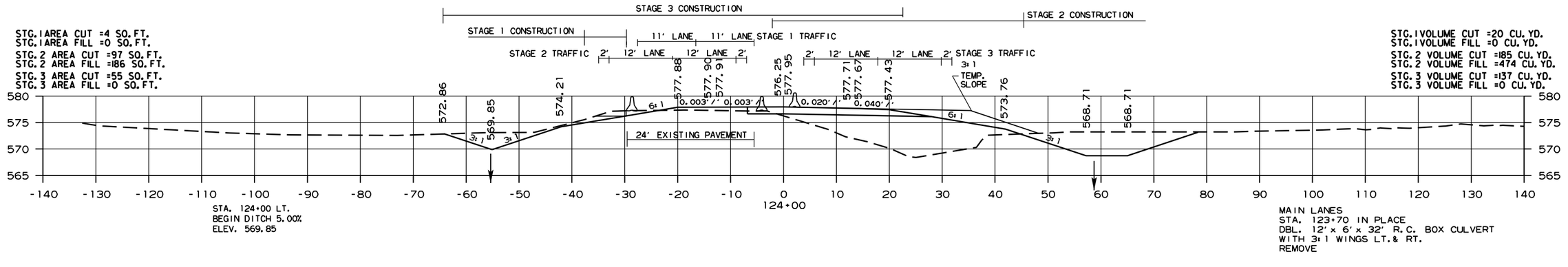

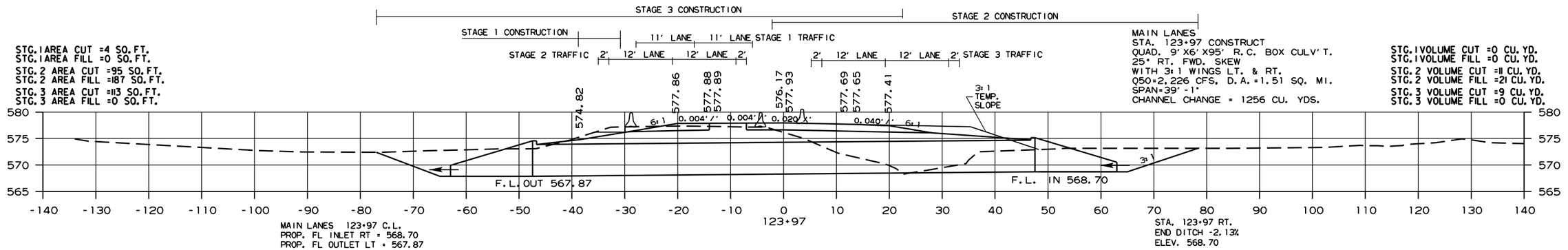

HWY. 71

CROSS SECTION STA. 123+97 TO STA. 124+00

T:\Job\D3337300 ArDot TO 144 Job 040781\T00 CADD Files\T70 Roadway Files\References\MGT-XSECTIONSwithnewsurface.dgn
...\MGT-XSECTIONSwithnewsurface.dgn
12/12/2023 12:40:01 PM

DATE REVISED	DATE REVISED	FED.RD. DIST.NO.	STATE	JOB NO.	SHEET NO.	TOTAL SHEETS
		6	ARK.	040781	108	115
		CROSS SECTIONS				

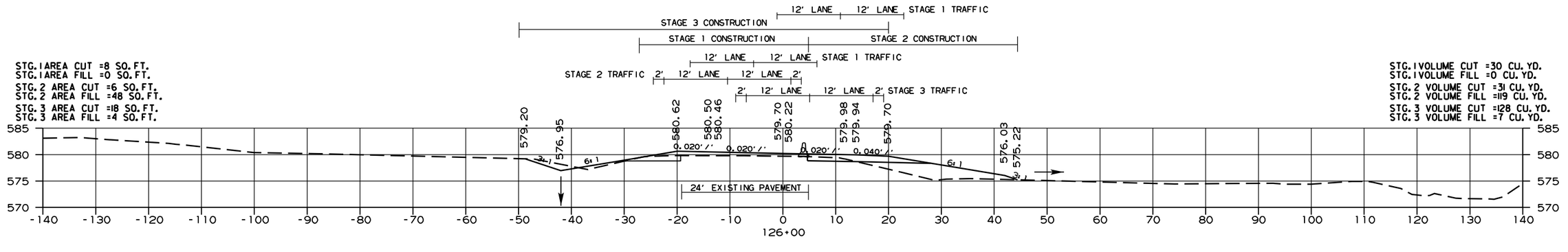

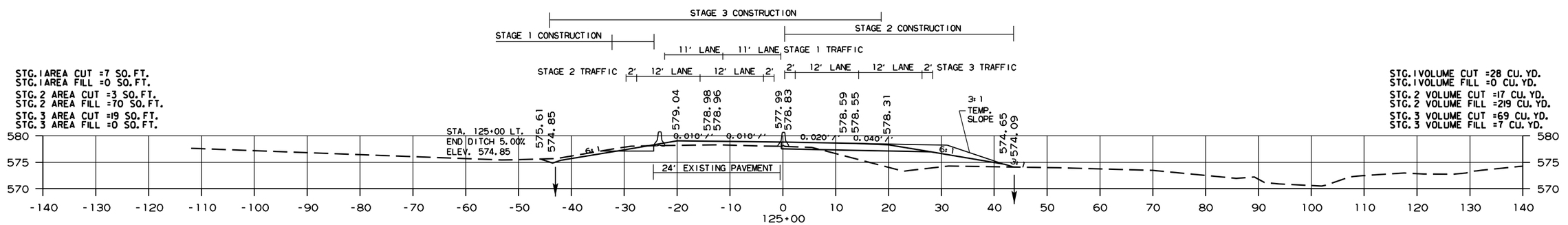

HWY. 71
CROSS SECTION STA. 125+00 TO STA. 126+00

T:\Job\D3337300 ArDot TO 144 Job 040781\700 CADD Files\770 Roadway Files\References\MOT-XSECTIONSwithnewsurface.dgn
02/02/2023 12:40:02 PM ...\MOT-XSECTIONSwithnewsurface.dgn

DATE REVISED	DATE REVISED	FED.RD. DIST.NO.	STATE	JOB NO.	SHEET NO.	TOTAL SHEETS
		6	ARK.	040781	109	115
		CROSS SECTIONS				

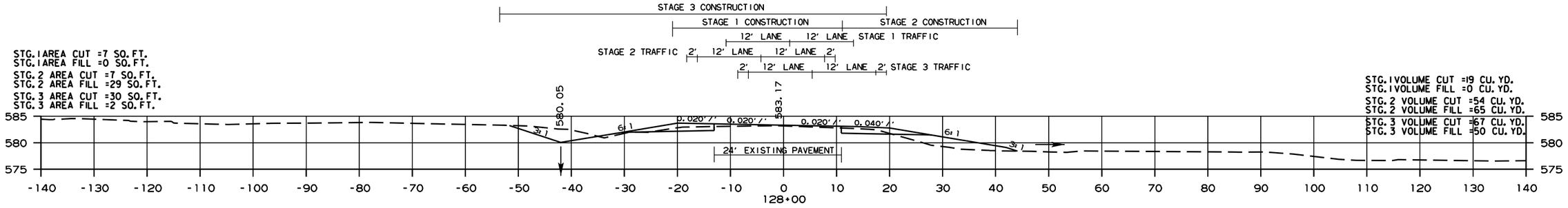

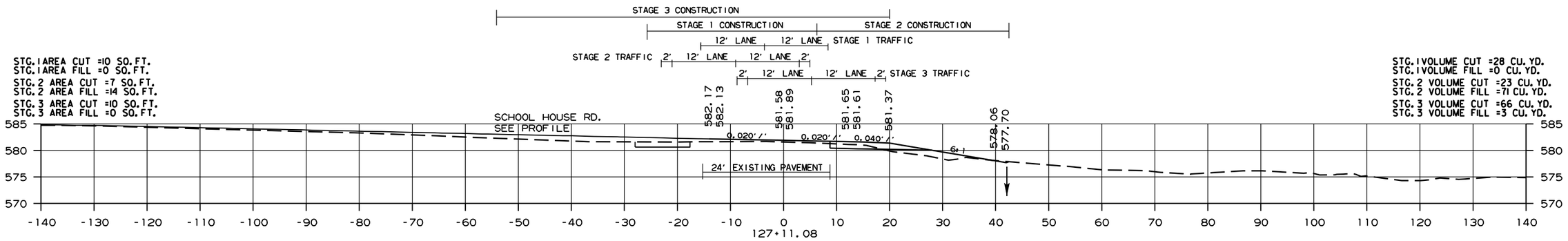

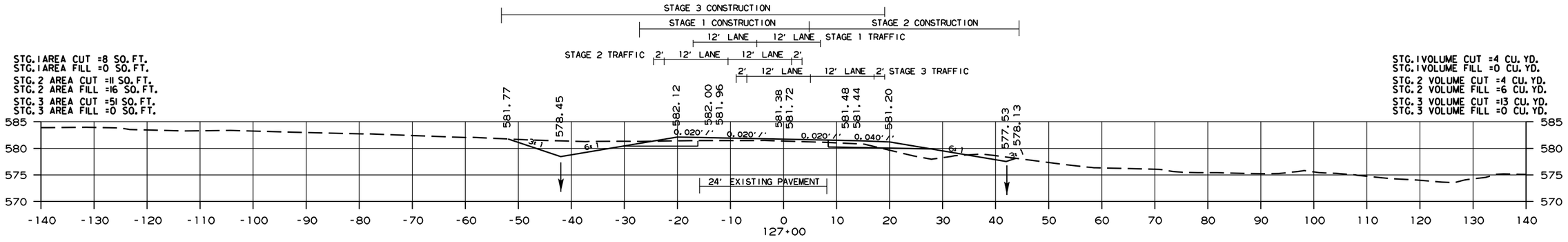

HWY. 71
CROSS SECTION STA. 127+00 TO STA. 128+00

T:\Job\03331300 ardot TO M4 Job 040781\700 CADD Files\770 Roadway Files\References\MOT-XSECTIONSwithnewsurface.dgn
12/12/2023 12:40:02 PM ...\MOT-XSECTIONSwithnewsurface.dgn

DATE REVISED	DATE REVISED	FED.RD. DIST.NO.	STATE	JOB NO.	SHEET NO.	TOTAL SHEETS
		6	ARK.	040781	110	115
		CROSS SECTIONS				

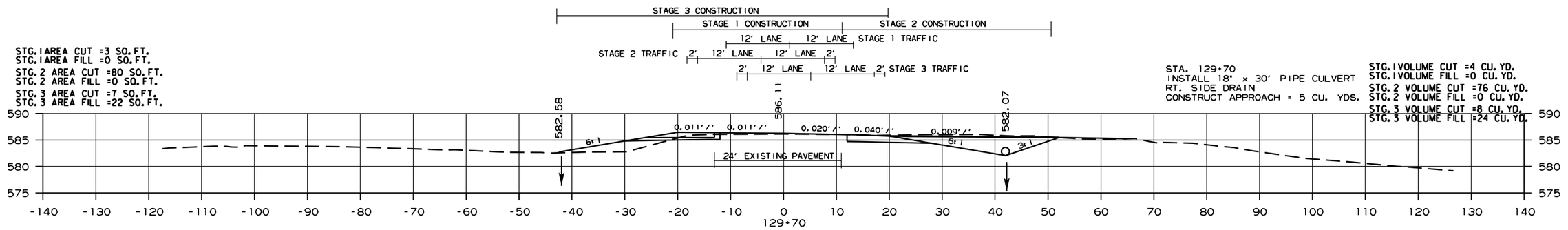

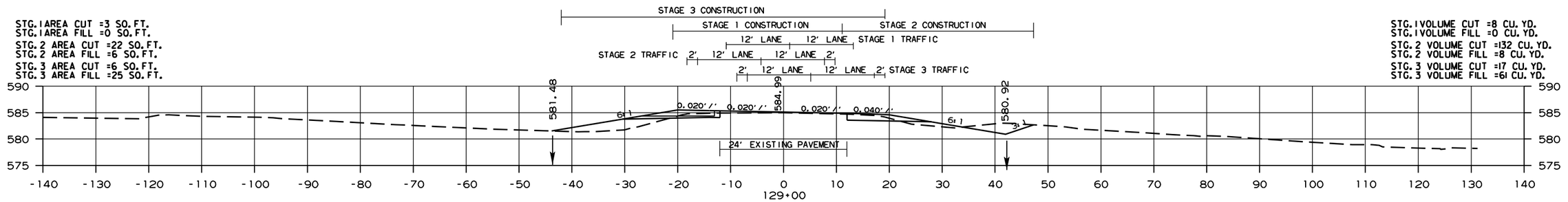

HWY. 71

CROSS SECTION STA. 129+00 TO STA. 129+70

T:\Job\D3337300 ArDot TO 144 Job 040781\700 CADD Files\770 Roadway Files\References\MOT-YSECTIONSwithnewsurface.dgn
12/12/2023 12:40:02 PM ...\MOT-YSECTIONSwithnewsurface.dgn

DATE REVISED	DATE REVISED	FED.RD. DIST.NO.	STATE	JOB NO.	SHEET NO.	TOTAL SHEETS
		6	ARK.	040781	111	115
		CROSS SECTIONS				

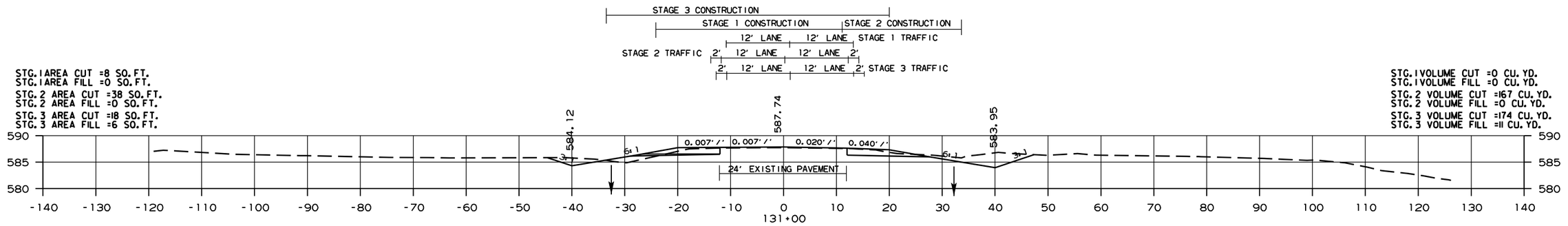

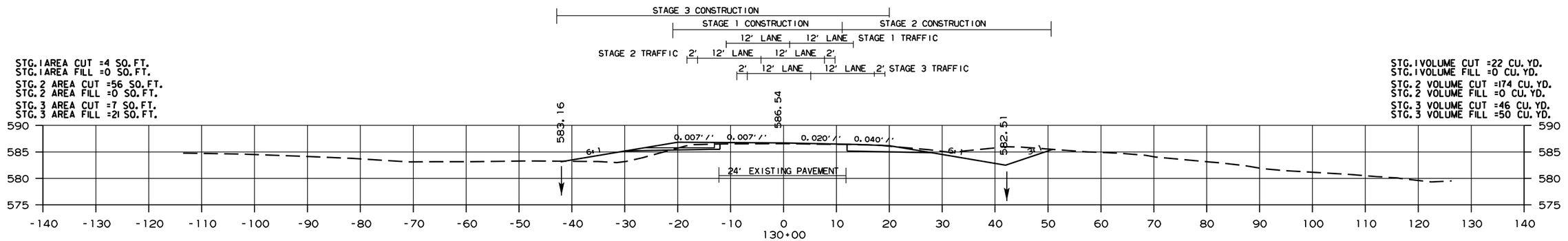

HWY. 71
CROSS SECTION STA. 130+00 TO STA. 131+00

T:\Job\D3337300 ArDot T0 144 Job 040781\T00 CADD Files\T70 Roadway Files\References\W01-YSECTIONSwithnewsurface.dgn
12/12/2023 12:40:03 PM ...\W01-YSECTIONSwithnewsurface.dgn

DATE REVISED	DATE REVISED	FED.RD. DIST.NO.	STATE	JOB NO.	SHEET NO.	TOTAL SHEETS
		6	ARK.	040781	112	115
		CROSS SECTIONS				

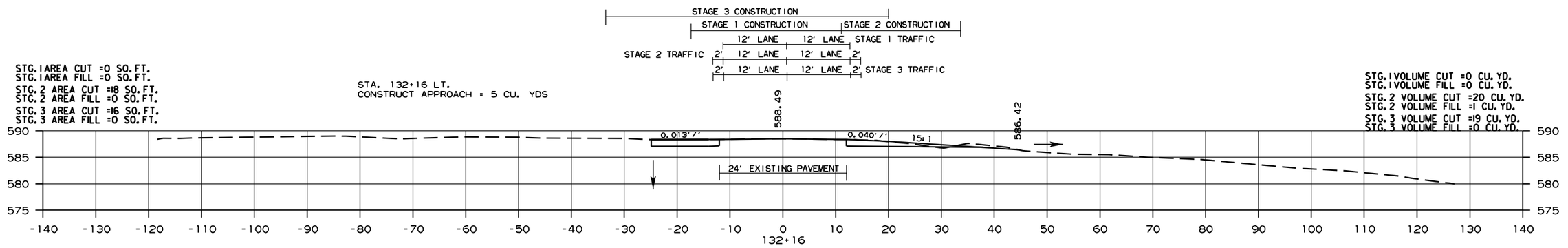

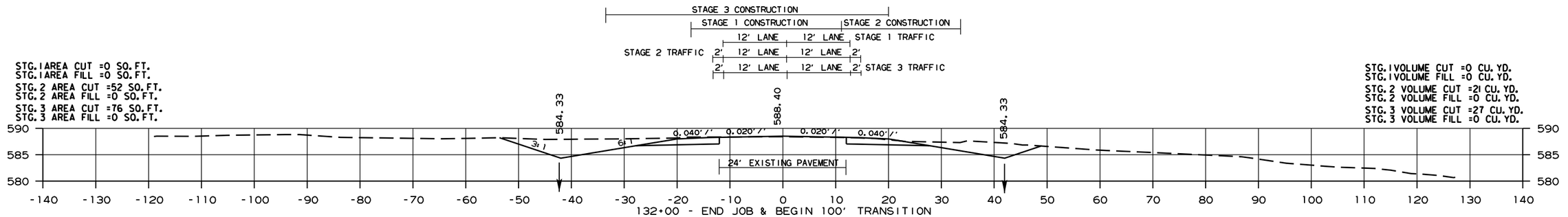

HWY. 71
CROSS SECTION STA. 132+00.00 TO STA. 132+16

T:\Job\D3337300 ArDot I-40 Job 040781\700 CADD Files\770 Roadway Files\References\W01-YSECTIONSwithnewsurface.dgn
2/2/2023 12:40:03 PM ...\W01-YSECTIONSwithnewsurface.dgn

DATE REVISED	DATE REVISED	FED.RD. DIST.NO.	STATE	JOB NO.	SHEET NO.	TOTAL SHEETS
		6	ARK.	040781	113	115
		CROSS SECTIONS				

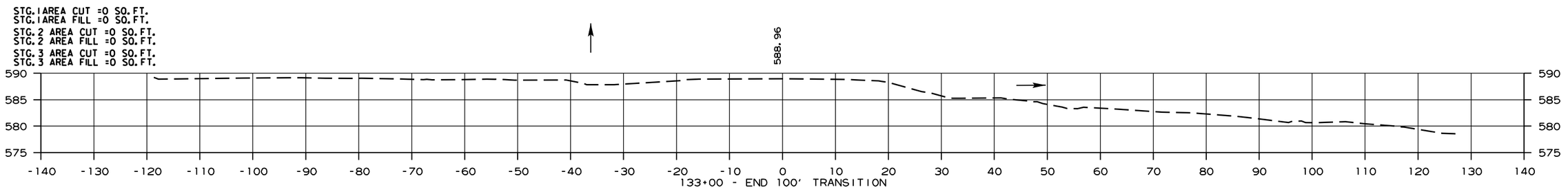

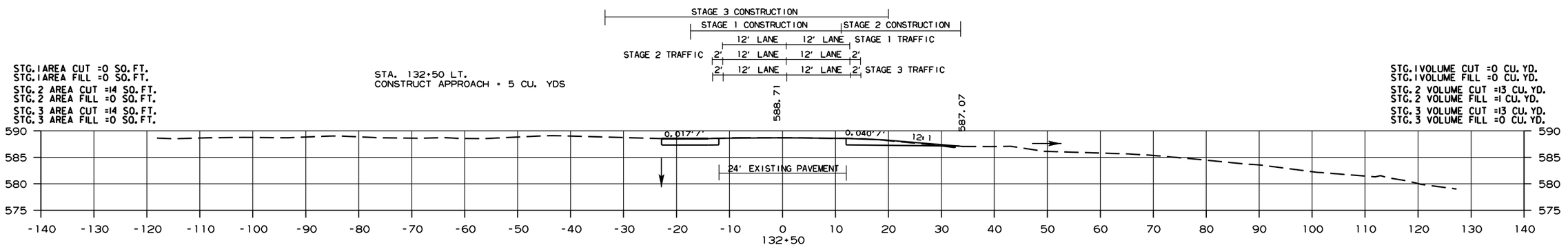

HWY. 71
CROSS SECTION STA. 132+50.00 TO STA. 133+00.00

T:\Job\D3337300 ArDot 10 I44 Job 040781\700 CADD Files\770 Roadway Files\References\MOT-YSECTIONSwithnewsurface.dgn
...\MOT-YSECTIONSwithnewsurface.dgn
12/12/2023 12:40:03 PM

DATE REVISED	DATE REVISED	FED.RD. DIST.NO.	STATE	JOB NO.	SHEET NO.	TOTAL SHEETS
		6	ARK.	040781	114	115
		CROSS SECTIONS				

AREA CUT =10 SQ.FT.
AREA FILL =0 SQ.FT.

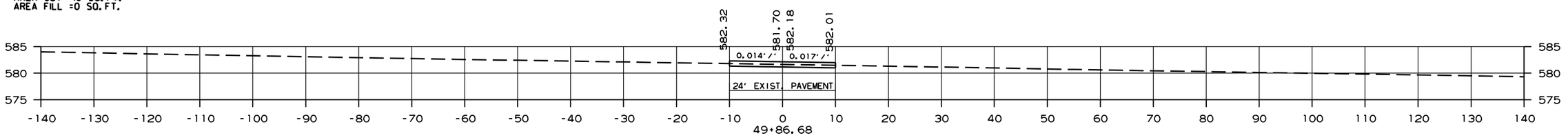

AREA CUT =74 SQ.FT.
AREA FILL =0 SQ.FT.

STA. 127+11 (HWY. 71) - LT.
INSTALL 24" X 46' PIPE CULVERT
Q25 =13 cfs, D.A.=3.7 Ac.

VOLUME CUT =45 CU.YD.
VOLUME FILL =0 CU.YD.

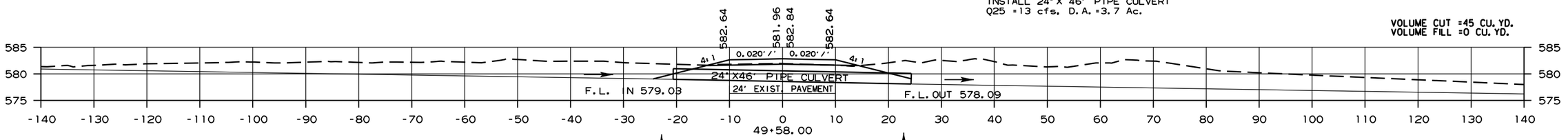

AREA CUT =87 SQ.FT.
AREA FILL =0 SQ.FT.

VOLUME CUT =24 CU.YD.
VOLUME FILL =0 CU.YD.

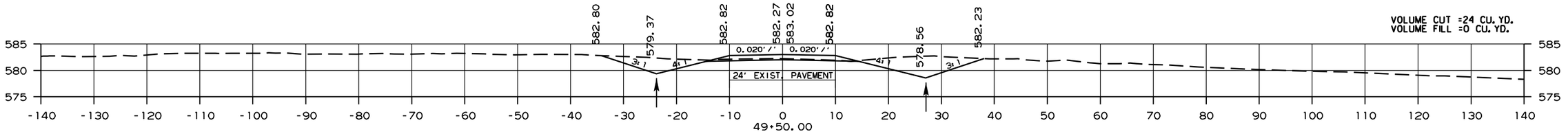

AREA CUT =49 SQ.FT.
AREA FILL =0 SQ.FT.

VOLUME CUT =126 CU.YD.
VOLUME FILL =0 CU.YD.

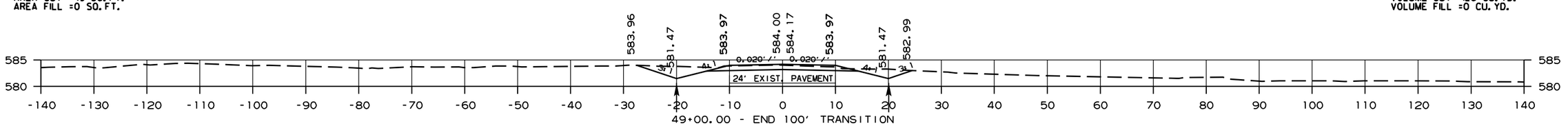

VOLUME CUT =91 CU.YD.
VOLUME FILL =0 CU.YD.

AREA CUT =0 SQ.FT.
AREA FILL =0 SQ.FT.

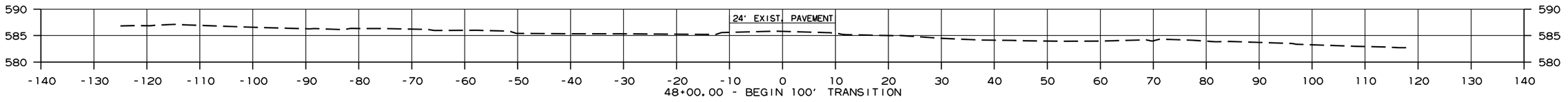

SCHOOL HOUSE DRIVE
CROSS SECTION STA. 48+00 TO STA. 49+86.68

T:\Job\03337300 ardot TO I44 Job 040781\700 CADD Files\770 Roadway Files\References\MOT-XSECTIONSwithmeasurface.dgn
12/12/2023 12:40:04 PM ...\MOT-XSECTIONSwithmeasurface.dgn

DATE REVISED	DATE REVISED	FED.RD. DIST.NO.	STATE	JOB NO.	SHEET NO.	TOTAL SHEETS
		6	ARK.	040781	115	115
		CROSS SECTIONS				

AREA CUT =0 SQ. FT.
AREA FILL =1 SQ. FT.

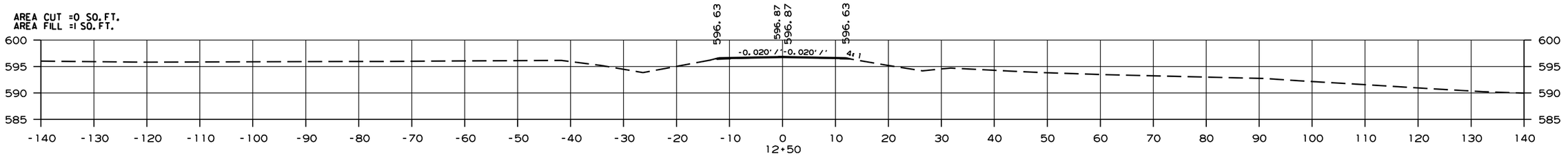

AREA CUT =0 SQ. FT.
AREA FILL =4 SQ. FT.

VOLUME CUT =0 CU. YD.
VOLUME FILL =5 CU. YD.

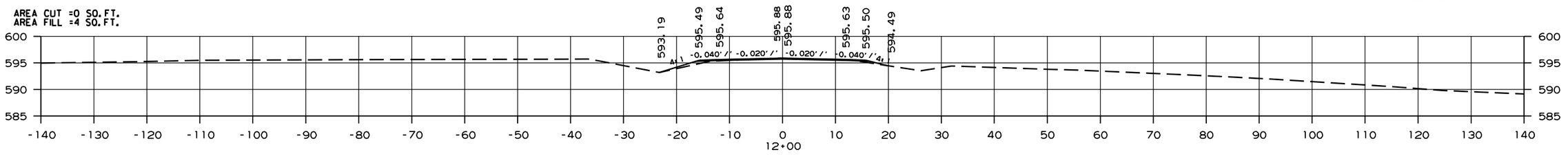

AREA CUT =170 SQ. FT.
AREA FILL =3 SQ. FT.

VOLUME CUT =315 CU. YD.
VOLUME FILL =13 CU. YD.

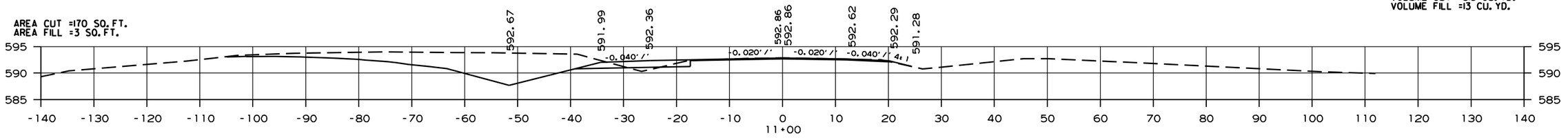

AREA CUT =5 SQ. FT.
AREA FILL =1 SQ. FT.

VOLUME CUT =235 CU. YD.
VOLUME FILL =5 CU. YD.

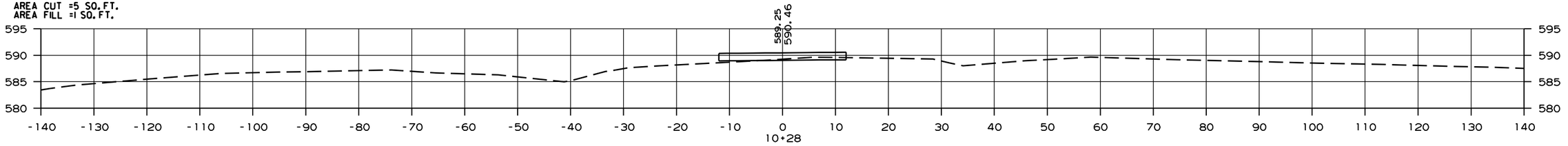

HWY. 252
CROSS SECTION STA. 10+27.59 TO STA. 12+50.00

T:\Job\03337300 Ardot TO 144 Job 040781\TOO CADD Files\TTO Roadway Files\References\MOT-XSECTIONSwithnewsurface.dgn
12/12/2023 12:40:04 PM ...\MOT-XSECTIONSwithnewsurface.dgn

DATE REVISED	DATE FILMED	DATE REVISED	DATE FILMED	FED. ROAD DIST. NO.	STATE	FED. AID PROJ. NO.	SHEET NO.	TOTAL SHEETS
				6	ARK.			
				JOB NO.				

1 EMBANKMENT & BACKFILL 55000

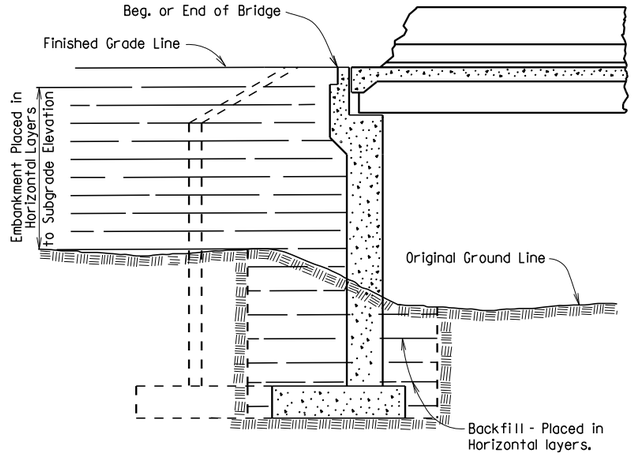

EMBANKMENT CONSTRUCTION AND FOOTING BACKFILL AT VERTICAL WALL ABUTMENTS

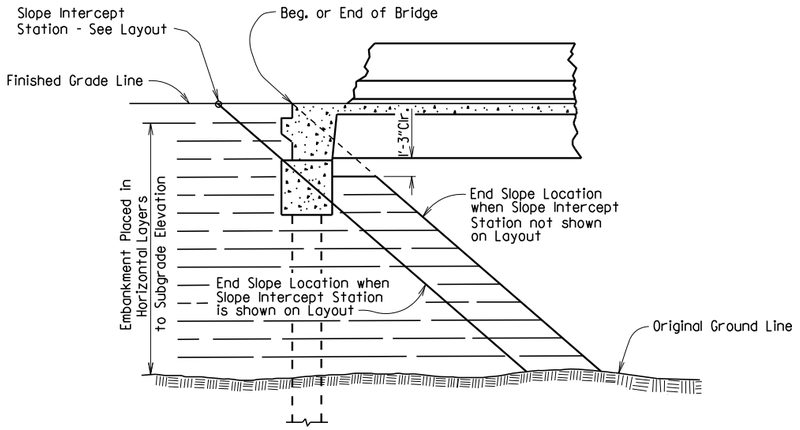

EMBANKMENT CONSTRUCTION AT SPILL-THROUGH PILE END BENTS

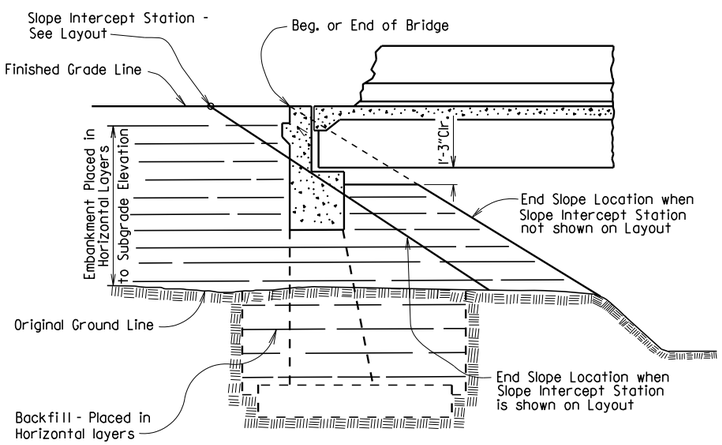

EMBANKMENT CONSTRUCTION AND FOOTING BACKFILL AT SPILL-THROUGH END BENTS

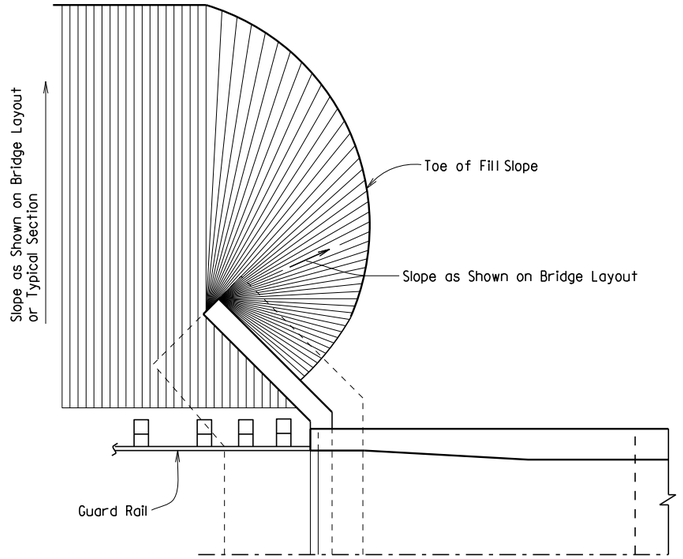

VERTICAL WALL ABUTMENTS

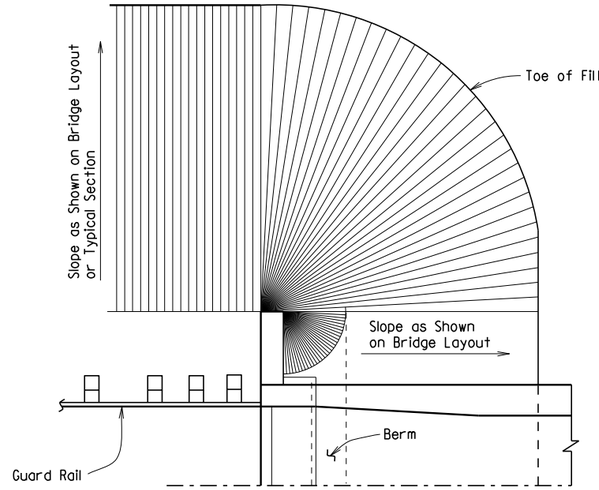

SPILL-THROUGH END BENTS WITH STUB WING

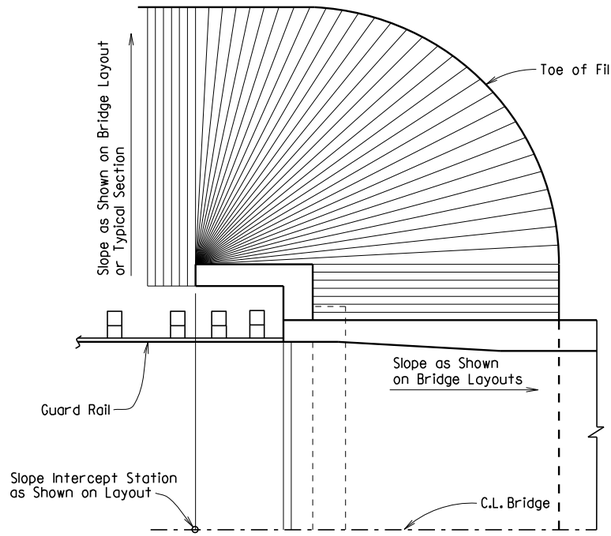

SPILL-THROUGH END BENTS WITH TURNBACK WING

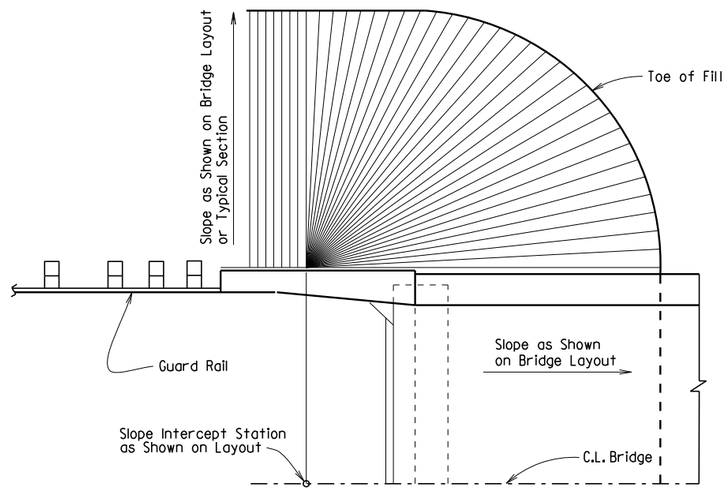

SPILL-THROUGH END BENTS WITH TRANSITION WING

METHOD OF DETERMINING FILL SLOPE LOCATION AT BRIDGE ENDS

GENERAL NOTES

The Bridge End Embankment shall be defined as a section of embankment, not less than 20 feet long adjacent to the bridge end, together with the side slopes and slopes under the bridge end including around the end of wingwalls. Embankment adjacent to structures shall be constructed in 6 inch horizontal layers (loose measure) and compacted by the use of mechanical equipment to the satisfaction of the Engineer. Refer to Subsections 210.09, 210.10 and 801.08 for construction requirements.

STANDARD DETAILS FOR EMBANKMENT CONSTRUCTION AND BACKFILL AT BRIDGE ENDS

ARKANSAS STATE HIGHWAY COMMISSION

LITTLE ROCK, ARK.

DRAWN BY: KDH DATE: 2-27-2014 FILENAME: b55000.dgn

CHECKED BY: BEF DATE: 2-27-2014 SCALE: NO SCALE

DESIGNED BY: STD. DATE: -

DRAWING NO. 55000

DATE REVISED	DATE FILMED	DATE REVISED	DATE FILMED	FED. ROAD DIST. NO.	STATE	FED. AID PROJ. NO.	SHEET NO.	TOTAL SHEETS
				6	ARK.			
				JOB NO.				

(1) RIPRAP & EXCAV. 55001

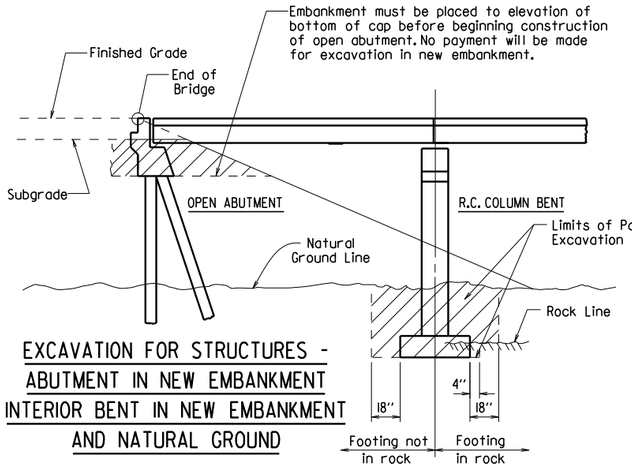

EXCAVATION FOR STRUCTURES - ABUTMENT IN NEW EMBANKMENT INTERIOR BENT IN NEW EMBANKMENT AND NATURAL GROUND

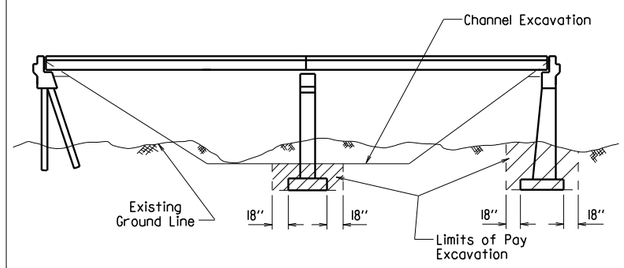

EXCAVATION FOR STRUCTURES - BRIDGE LOCATION WITH DESIGNATED CHANNEL CHANGE

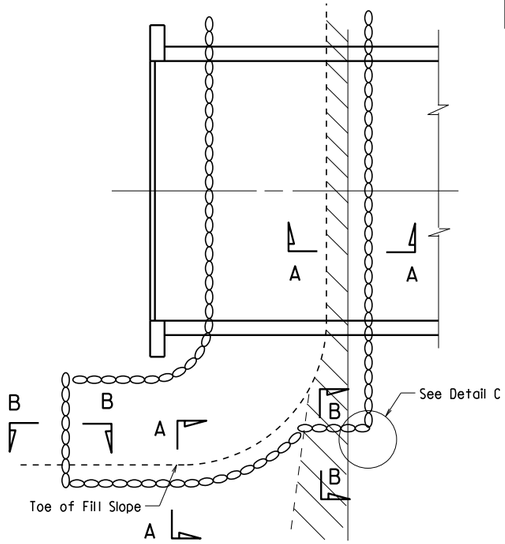

PLAN OF DUMPED RIPRAP

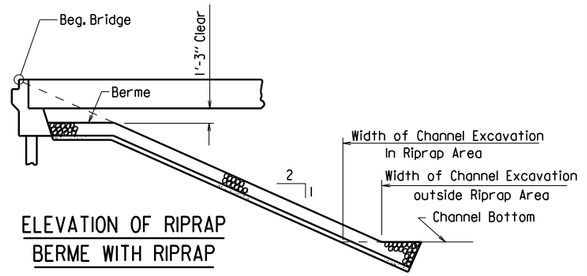

ELEVATION OF RIPRAP BERME WITH RIPRAP

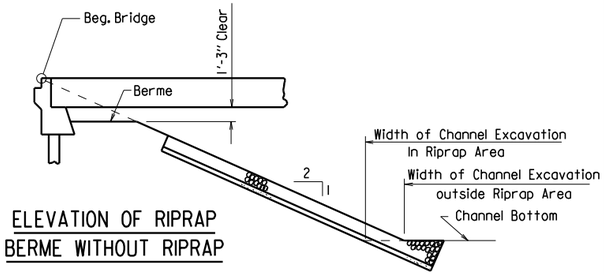

ELEVATION OF RIPRAP BERME WITHOUT RIPRAP

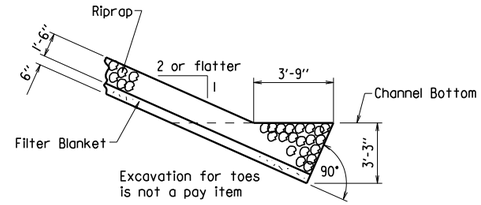

SECTION A-A

(Toe Excavation in Soil)

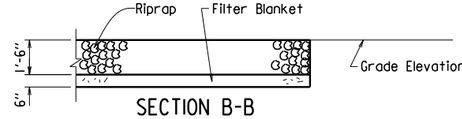

SECTION B-B

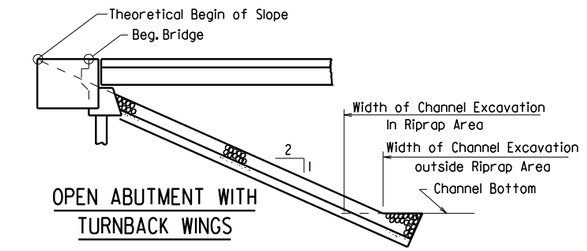

OPEN ABUTMENT WITH TURNBACK WINGS

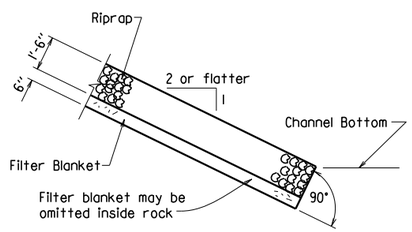

SECTION A-A

(Toe Excavation in Rock)

Note : Use this type of toe when rock is encountered which is in a stable condition.

Note : In lieu of an aggregate filter blanket, a synthetic fiber geotextile fabric complying with the requirements of Subsection 816.02(e) may be used.

Note : Details for computing excavation for structures are included for information as to how plan quantities were calculated and for use when adjusting quantities when changing footing elevation.

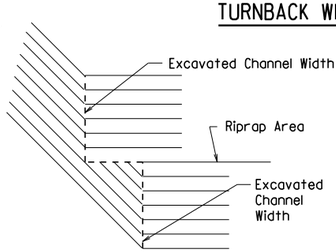

DETAIL C

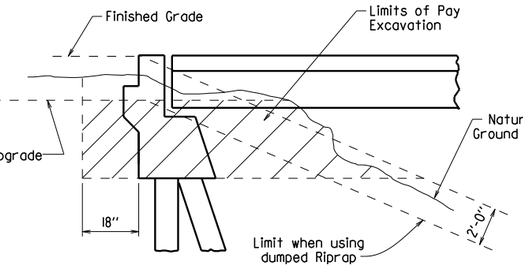

EXCAVATION FOR STRUCTURES - ABUTMENT IN NATURAL GROUND

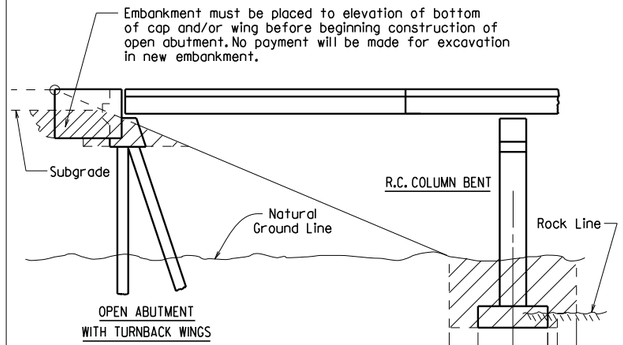

EXCAVATION FOR STRUCTURES - ABUTMENT IN NEW EMBANKMENT INTERIOR BENT IN NATURAL GROUND

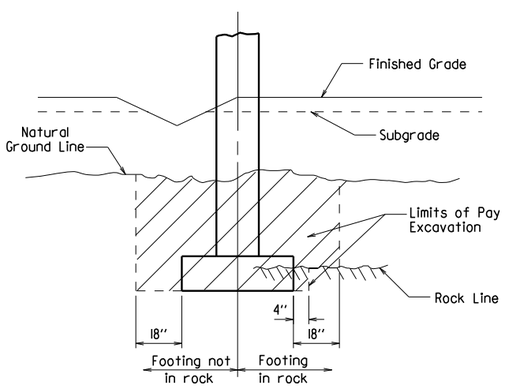

EXCAVATION FOR STRUCTURES - BENT IN ROADWAY FILL SECTION AND NATURAL GROUND

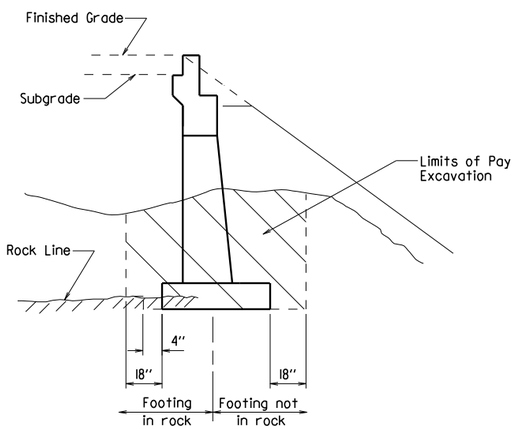

EXCAVATION FOR STRUCTURES - ABUTMENT IN NATURAL GROUND AND NEW EMBANKMENT

STANDARD DETAILS FOR DUMPED RIPRAP AND FILTER BLANKET AND COMPUTING EXCAVATION FOR STRUCTURES

ARKANSAS STATE HIGHWAY COMMISSION

LITTLE ROCK, ARK.

DRAWN BY: KDH DATE: 2-27-2014 FILENAME: b55001.dgn

CHECKED BY: BEF DATE: 2-27-2014 SCALE: NO SCALE

DESIGNED BY: STD. DATE:

DRAWING NO. 55001

DATE REVISED	DATE FILMED	DATE REVISED	DATE FILMED	FED. ROAD DIST. NO.	STATE	FED. AID PROJ. NO.	SHEET NO.	TOTAL SHEETS
3/24/16				6	ARK.			
				JOB NO.				

(1) BRIDGE DECK FORMS 55005

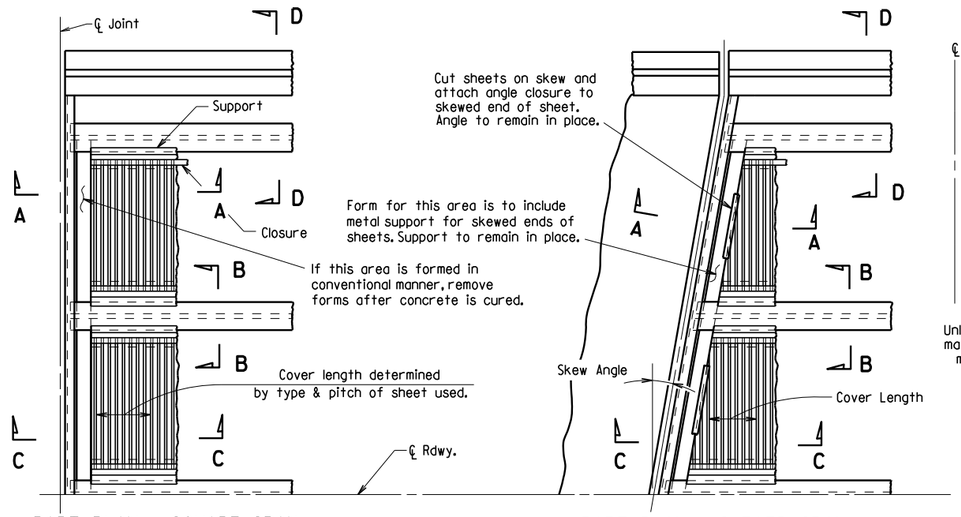

PART PLAN - SQUARE SPAN

3/8" = 1'-0"

PART PLAN - SKEWED SPAN

3/8" = 1'-0"

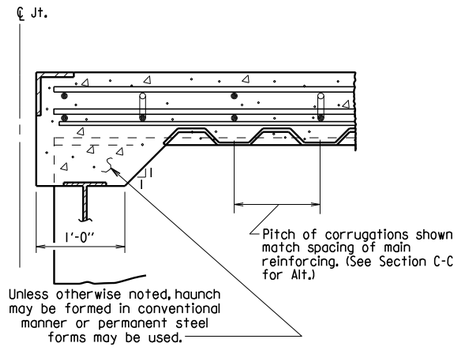

SECTION A-A

N.T.S.

(Angle at end of span)

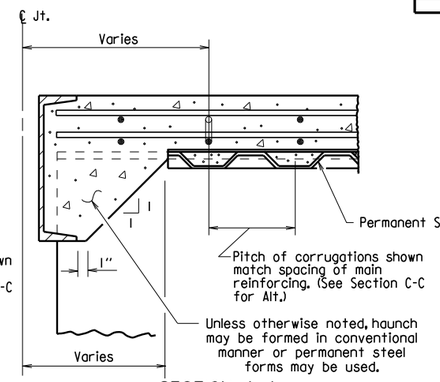

SECTION A-A

N.T.S.

(Channel at end of span)

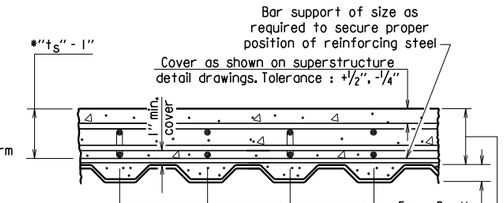

SECTION C-C

1" = 1'-0"

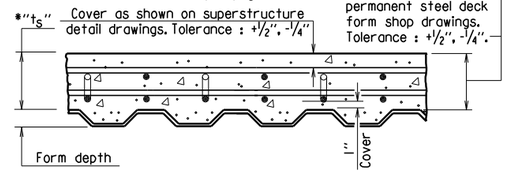

SECTION C-C - ALTERNATE

1" = 1'-0"

(Applicable when corrugations do not match spacing of main reinforcement)

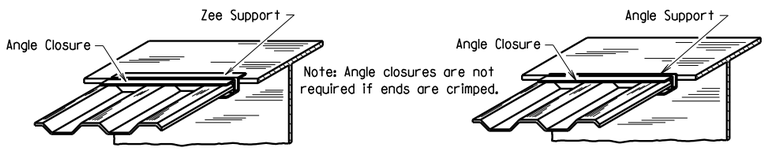

SKETCH OF PERMISSIBLE SUPPORTS

N.T.S.

*t_s = slab thickness as shown on superstructure detail drawings.

GENERAL NOTES

Permanent steel deck forms may be used at the Contractor's option and shall be at no additional cost to the Department. Such use may result in changes to the dead load deflection of the girder. Any cost for adjustments due to a change in the dead load deflection will be borne by the Contractor. Payment for deck concrete and structural steel will not be increased due to use of permanent steel deck forms.

Permanent steel deck forms shall conform to Subsection 802.14(b). Detailed plans, including detailed calculations and manufacturer's technical brochure, shall be submitted to and approved by the Engineer before work of forming the bridge deck is started.

Welding of form supports to the tension flange of steel girders will be permitted only in areas where shear connectors are used. When welding is not allowed, the method of fastening Z or ∠ supports to the flange must be approved by the Engineer.

Form sheets shall be fastened to supporting members and to each other with galvanized metal screws sufficient in size and number to provide a secure attachment. Alternate methods of attachment must be approved by the Engineer.

When the pitch of form corrugations match the reinforcing spacing, transversely align form sheets across the bridge to maintain the correct orientation of continuous reinforcing bars in the corrugations.

Bar support rods, when used, shall be sized and spaced to adequately support the bottom reinforcing mat at the required position.

High chairs shall be sized to support the top mat of reinforcing at the proper position. High chairs shall be placed at locations shown on the detail drawings.

Specifications: Arkansas State Highway and Transportation Department Standard Specifications for Highway Construction (2014 Edition), with applicable Supplemental Specifications and Special Provisions.

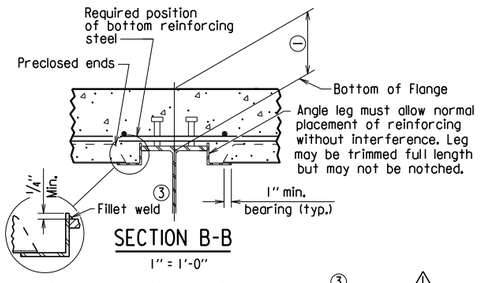

SECTION B-B

1" = 1'-0"

(Showing permissible support for tension flange where shear connectors are used, and for all compression flanges)

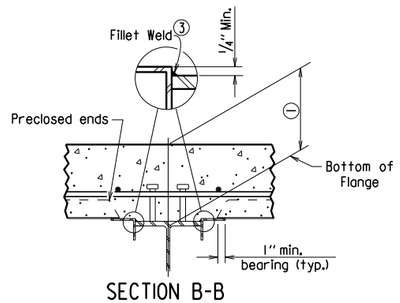

SECTION B-B

1" = 1'-0"

(Showing permissible support for tension flange where shear connectors are used and for all compression flanges)

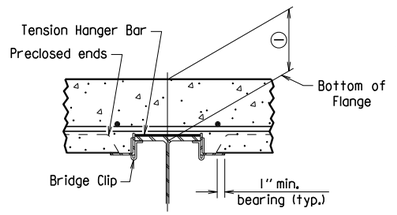

SECTION B-B

1" = 1'-0"

(Showing permissible support for tension flange where shear connectors are not used)

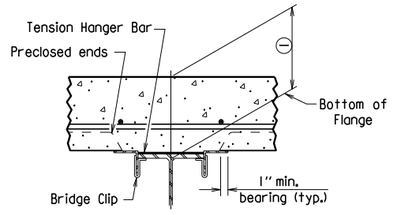

SECTION B-B

1" = 1'-0"

(Showing permissible support for tension flange where shear connectors are not used)

(3) Minimum weld: 1/8" x 1" @ 18". More weld may be required; maximum length per weld = 1 1/2" (typ.)

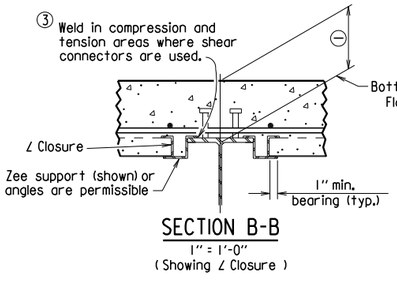

SECTION B-B

1" = 1'-0"

(Showing ∠ Closure)

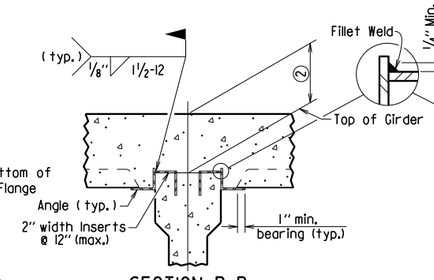

SECTION B-B

(FOR CONCRETE GIRDERS)

1" = 1'-0"

(Showing support by Insert cast in girder)

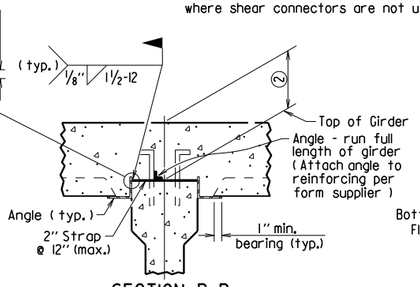

SECTION B-B

(FOR CONCRETE GIRDERS)

1" = 1'-0"

(Showing support by Strap)

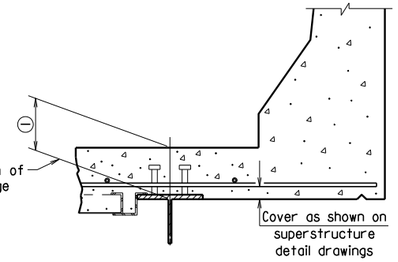

SECTION D-D

1" = 1'-0"

Note: Only Bottom Reinforcing is shown.

(1) Distance from top of slab to bottom of top flange as measured at centerline girder and as shown on superstructure detail drawings. This dimension may vary within the following limits to maintain the grade and slab thickness tolerances : Minimum - occurs when either the top flange or the support angle leg contacts the bottom reinforcing steel; Maximum = t_S + 1 3/4" + flange thickness. See Section C-C for slab thickness tolerance between adjacent girder flanges.

(2) Distance from top of slab to top of girder as measured at centerline girder and as shown on superstructure detail drawings. This dimension may vary within the following limits to maintain the grade and slab thickness tolerances : Minimum - occurs when either the top of girder or the support angle leg contacts the bottom reinforcing steel; Maximum - value shown on the superstructure detail drawings when removable forms are used. See Section C-C for slab thickness tolerance between adjacent girder flanges.

⚠ Revised weld dimension by KWY, Ck'd. by BEF, 3/24/16.

STANDARD DETAILS FOR PERMANENT STEEL BRIDGE DECK FORMS FOR STEEL & CONCRETE GIRDER SPANS

ARKANSAS STATE HIGHWAY COMMISSION

LITTLE ROCK, ARK.

DRAWN BY: KDH DATE: 2-27-2014 FILENAME: b55005.dgn

CHECKED BY: BEF DATE: 2-27-2014 SCALE: NONE

DESIGNED BY: STD. DATE: —

DRAWING NO. 55005

DATE REVISED	DATE FILMED	DATE REVISED	DATE FILMED	FED. ROAD DIST. NO.	STATE	FED. AID PROJ. NO.	SHEET NO.	TOTAL SHEETS
3/24/16				6	ARK.			
				JOB NO.				
				①		STEEL H-PILES		55020

GENERAL NOTES FOR STEEL H-PILES:

Steel H-Piles shall conform to AASHTO M 270, Grade 36 or greater.

See Bridge Layout and Bent Details for pile size, estimated length, spacing, pile anchorage (if required) and for driving information.

Steel H-Piles that extend above the ground and are not protected by pile encasement shall be painted in accordance with Subsection 805.02.

Brackets, lugs, cap plates, pile tips, driving points, pile painting, splicing and welding shall not be paid for directly, but shall be considered subsidiary to the item "Steel Piling".

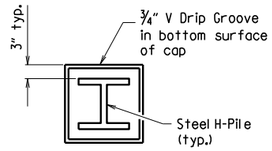

VIEW X-X

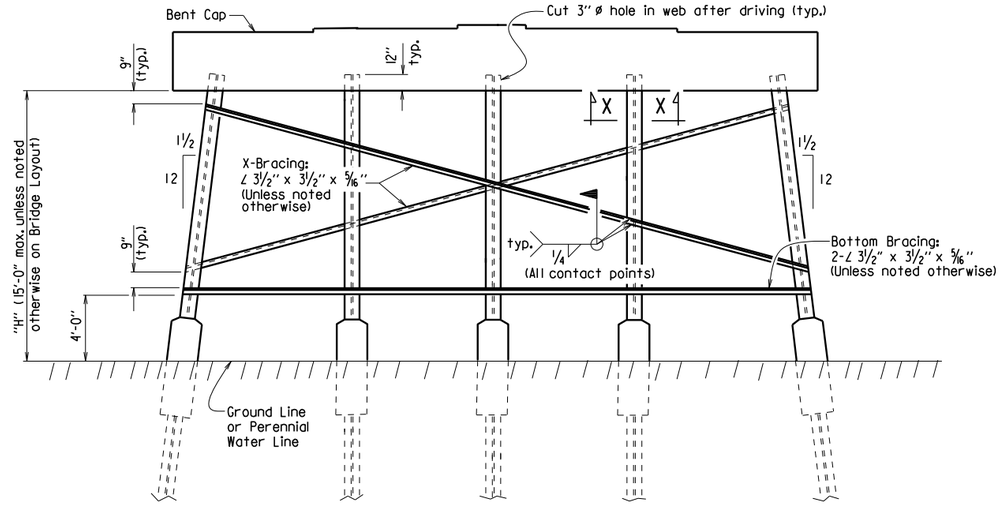

Notes:
All bracing shall be cut and welded in the field. Each brace shall be furnished in one piece. Payment shall be made under Item 807.

Unless noted otherwise, omit X-Bracing when "H" is less than 8 feet.

Omit X-Bracing and Bottom Bracing when "H" is 5 feet or less.

When required on the Bridge Layout sheet, pile encasements shall be constructed. See Notes and Details for H-Pile Encasements.

Omit all bracing (and V-groove in cap) when pile encasement is extended to bottom of bent cap.

TYPICAL DETAILS OF H-PILE TRESTLE INTERMEDIATE BENT

(Shown with Partial Height Encasement)

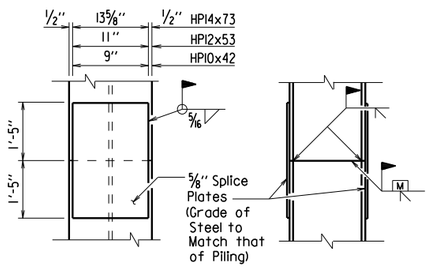

The Contractor may for his own convenience and at his own expense provide as many as three splices per pile. Minimum spacing between splices shall be 5 feet.

TYPICAL SPLICE DETAILS

⚠ H-pile splicers manufactured by Associated Pile and Fitting Corporation, LB Foster Piling, Skyline Steel or equivalent may be used in lieu of the "Typical Splice Details" shown. H-pile splicers shall match the same grade of steel specified for the piling and shall be welded to the pile with a 5/16" fillet weld around the entire perimeter of the splice. Flanges shall be welded with a complete penetration groove weld complying with AASHTO/AWS Joint Designation B-U4a or B-U4b. All welding shall conform to Subsection 807.26 of the AHTD Standard Specifcations for Highway Construction (2014 Edition).

Notes:
Steel pile tip reinforcing not required when approved H-Pile driving points are used.

Steel pile tip reinforcing shall not be paid for directly, but shall be considered subsidiary to the item "Steel Piling".

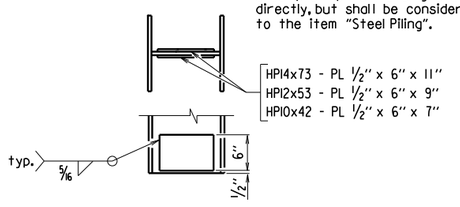

REINFORCING DETAIL FOR STEEL H-PILE TIP

GENERAL NOTES FOR H-PILE ENCASEMENTS:

⚠ See Bridge Layout for additional notes, any pile encasement restrictions and required location of pile encasements.

All concrete shall be Class S with a minimum 28-day compressive strength, f'c = 3,500 psi. If concrete cannot be placed in the dry, Seal Concrete may be used from top to bottom of encasement.

Reinforcing steel shall be Grade 60 conforming to AASHTO M 31 or M 322, Type A.

Welded Wire Fabric shall conform to AASHTO M 55 or M 221. Galvanized Corrugated Steel Pipe shall conform to AASHTO M 36 and M 218.

Concrete, welded wire fabric or reinforcing steel and galvanized pipe shall not be paid for directly, but shall be considered subsidiary to the item "Pile Encasement".

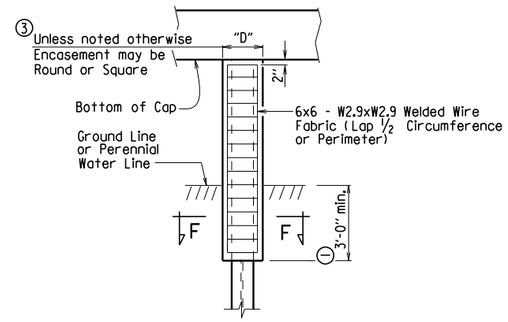

PILE ENCASEMENT DETAIL FOR STEEL H-PILES

④ (Shown with Encasement to Bottom of Cap)

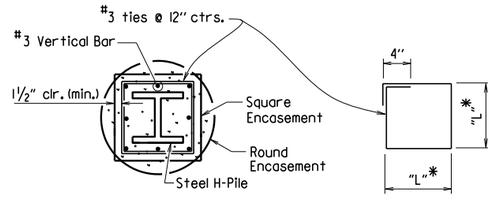

SECTION F-F

*Measured out-to-out of bar.

TABLE OF VARIABLES FOR PILE ENCASEMENT

Pile Size	"D" Square Encsmt.	"D" Round Encsmt.	"L"*
HPI0x42	1'-7"	2'-0"	1'-4"
HPI2x53	1'-8"	2'-2"	1'-5"
HPI4x73	1'-11"	2'-6"	1'-8"

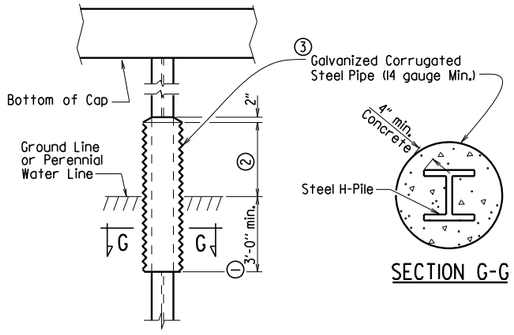

SECTION G-G

① Unless otherwise noted on Bridge Layout.

② 3'-0" minimum or as shown on Bridge Layout.

③ Encasement dimensions shall be sized to maintain a minimum concrete cover of 4" from the H-Pile. Reinforcement shall be sized to provide a minimum concrete cover of 1½" and a minimum clearance of 1¼" from the pile.

④ Alternate pile encasement, when not extended to bottom of cap, shall have 2" concrete taper for water runoff as shown in the Partial Height Encasement detail.

ALTERNATE PILE ENCASEMENT DETAIL FOR STEEL H-PILES

(Shown with Partial Height Encasement)

⚠ Added alternate method of splicing H-piles and revised pile encasement note.
3/24/2016 AMS

This document was originally issued and sealed by Charles R. Ellis, PE No. 9235, on March 24, 2016. This copy is not a signed and sealed document.

STATE OF ARKANSAS
REGISTERED PROFESSIONAL ENGINEER
No. 9235
CHARLES R. ELLIS

BRIDGE ENGINEER

STANDARD DETAILS FOR STEEL H-PILES AND PILE ENCASEMENTS

ARKANSAS STATE HIGHWAY COMMISSION

LITTLE ROCK, ARK.

DRAWN BY: A.M.S. DATE: 2/27/2014 FILENAME: b55020.dgn
CHECKED BY: B.E.F. DATE: 2/27/2014 SCALE: NO SCALE
DESIGNED BY: STD. DATE: —

DRAWING NO. 55020

DATE REVISED	DATE REVISED	FED. RD. DIST. NO.	STATE	JOB NO.	SHEET NO.	TOTAL SHEETS
01-11-23		6	ARK.			
		TYPE D NAME PLATE - 55010				

The name of the bridge as shown on the plans shall be placed on Lines 1-3 using ⅛" raised letters and numerals ⅜" high.

	Example 1	Example 2	Example 3	Example 4
Line 1	Red River	Southern	Saline	
Line 2	Relief	Railroad	River	Highway 5
Line 3		Overpass	Relief	

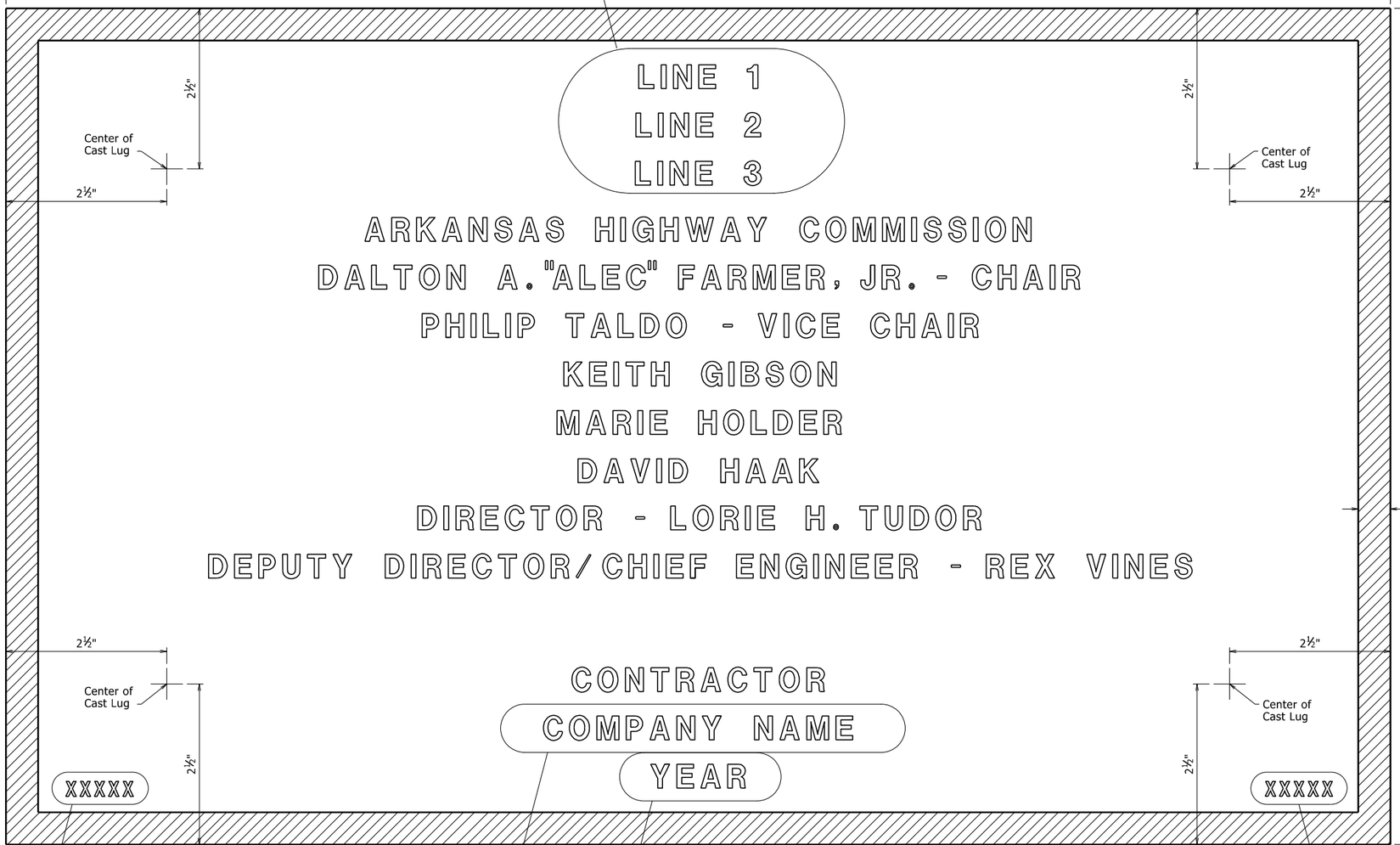

Place the design live loading here using ⅛" raised letters and numerals ¼" high. Examples: HS20, HL-93

Place the Year in which Contract was awarded here using ⅛" raised numerals ⅜" high. Example: 2001

Place the name of the company awarded the construction contract here using ⅛" raised letters and numerals ⅜" high. Example: ABCD CONSTRUCTION, INC.

Place the Bridge number here using ⅛" raised letters and numerals ¼" high. Examples: A1234, 05432

TYPICAL BRIDGE NAME PLATE

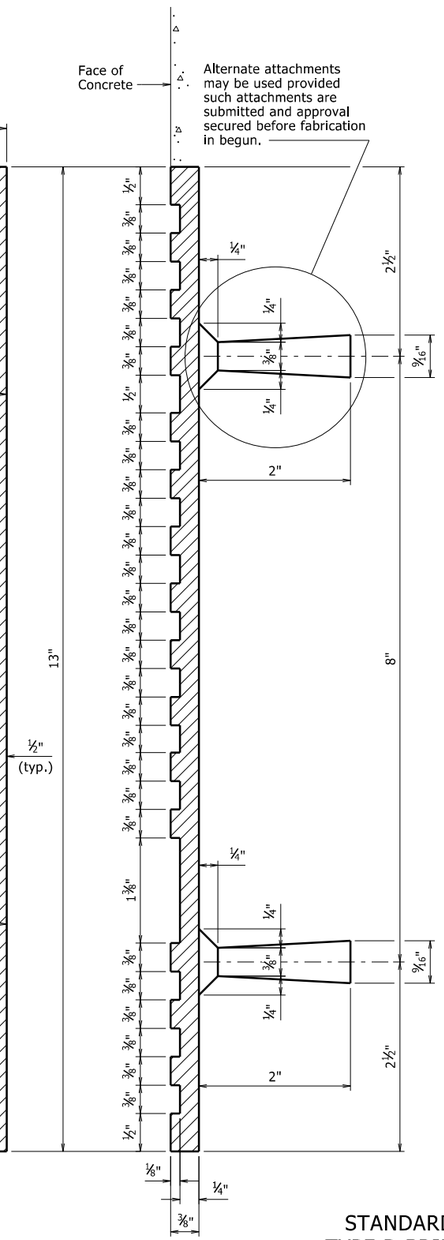

GENERAL NOTES

Specifications: Arkansas State Highway and Transportation Department Standard Specifications for Highway Construction, (2014 Edition) with applicable Supplemental Specifications and Special Provisions.

Name plates shall be cast bronze and shall meet the material requirements as specified in Section 812.

Body of plate shall be ¼" thick and shall include four tapering cone lugs ⅜" to 9⁄16" x 2" long. The border and all lettering shall be raised ⅛" above the face of plate and shall be polished.

All lettering shall be plain gothic, square cut and not tapered.

The number of plates required and the location and name on the plate for each bridge shall be as designated on the plans.

1 Revised and Redrawn
01-11-23 CGP Checked By: CRE

STANDARD DETAILS FOR
TYPE D BRIDGE NAME PLATE

ROUTE SEC.

ARKANSAS STATE HIGHWAY COMMISSION
LITTLE ROCK, ARK.

DRAWN BY: KDH DATE: 2-27-2014 FILENAME: b55010.dgn
CHECKED BY: BEF DATE: 2-27-2014 SCALE: NO SCALE
DESIGNED BY: STD. DATE:

DRAWING NO. 55010

PRINT DATE: 2/9/2023

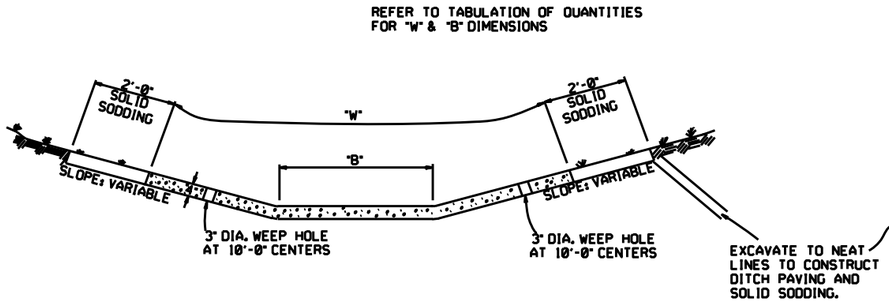

TYPE A

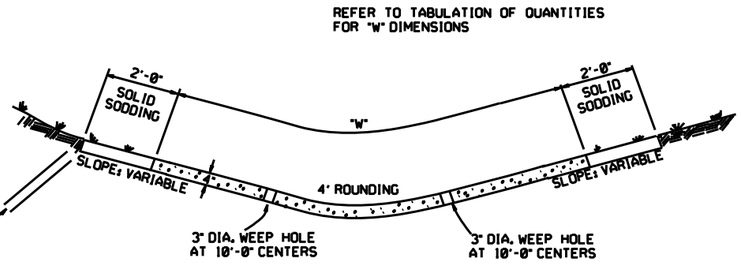

TYPE B

THE STEEL AND ADDITIONAL CONCRETE FOR THE WALLS SHALL NOT BE PAID FOR DIRECTLY, BUT SHALL BE CONSIDERED TO BE INCLUDED IN THE PRICE BID FOR "CONCRETE DITCH PAVING."

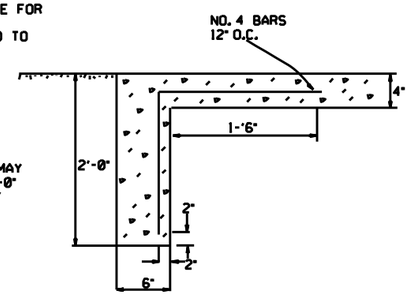

TOE WALL DETAIL FOR CONCRETE DITCH PAVING

TOE WALL DEPTH MAY BE ALTERED TO 1'-0" WHEN DIRECTED BY THE ENGINEER IN ROCK EXCAVATION

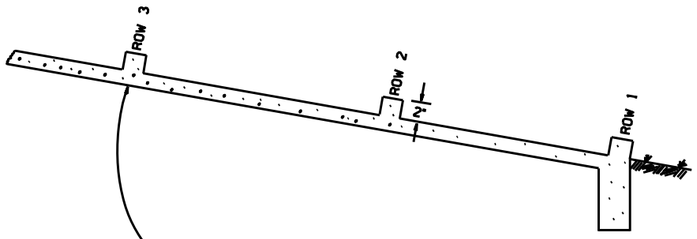

ENERGY DISSIPATORS
(NO SCALE)

ENERGY DISSIPATORS TO BE USED FOR THE ENTIRE LENGTH OF DITCH WHEN SLOPE OF DITCH PAVING EXCEEDS 7%. THE DISSIPATORS WILL NOT BE PAID FOR DIRECTLY, BUT SHALL BE CONSIDERED TO BE INCLUDED IN THE PRICE BID FOR CONCRETE DITCH PAVING.

GENERAL NOTES:

THE FULL WIDTH OF EACH SECTION SHALL BE POURED MONOLITHICALLY.

TOE WALLS TO BE CONSTRUCTED FULL WIDTH AT EACH END OF DITCH PAVING, AND POURED MONOLITHICALLY.

SOLID SOD ALONG DITCH PAVING TO BE PLACED WITHIN 14 DAYS OF DITCH PAVING CONSTRUCTION.

1" WIDE TRANSVERSE EXPANSION JOINTS SHALL BE PLACED IN CONCRETE DITCH PAVING AT 45' INTERVALS. THE SPACE SHALL BE FILLED WITH APPROVED JOINT FILLER COMPLYING WITH AASHTO M213.

DATE	REVISION	DATE FILM'D
12-8-16	CORRECTED ENERGY DISSIPATOR DRAWING AND NOTE	
11-17-10	ADDED GENERAL NOTE	
6-2-94	ADDED GENERAL NOTE ABOUT SOLID SODDING	
11-30-8	ELIMINATED MIN. ROWS OF ELEMENTS	111-30-89
7-15-88	REVISED DISSIPATOR NOTE	653-7-15-88
4-3-87	REVISED ENERGY DISSIPATOR	671-4-3-87
1-9-87	MODIFIED NOTE ON ENERGY DISS.	532-1-9-87
11-3-86	ADDED NOTE TO ENERGY DISS.	499-12-1-86
11-1-84	ENERGY DISSIPATOR DETAILS ADDED	508-11-1-84
11-1-84	EXCAVATION DETAILS ADDED TYPED A & B	
10-2-72	REVISED AND REDRAWN	508-10-2-72

ARKANSAS STATE HIGHWAY COMMISSION

CONCRETE DITCH PAVING

STANDARD DRAWING CDP-1

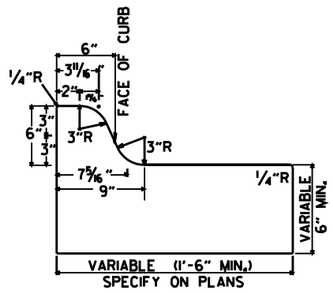

TYPE A

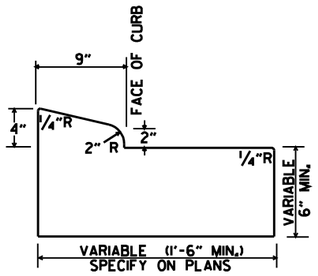

TYPE B-1

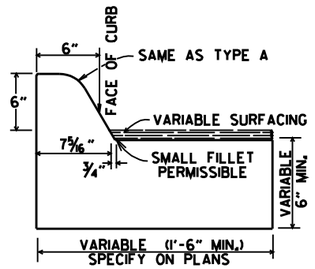

TYPE C

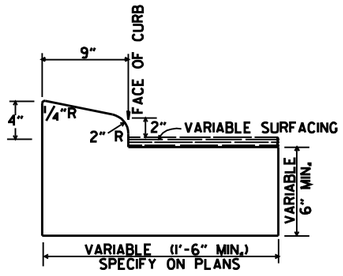

TYPE B-2

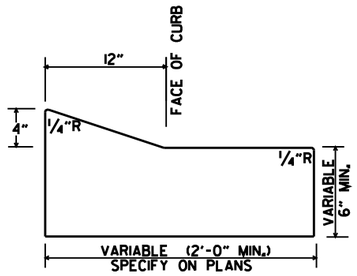

TYPE E-1

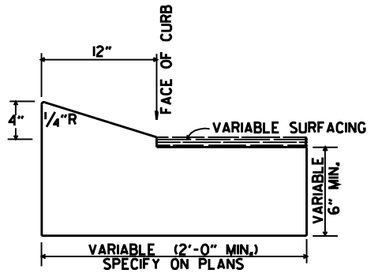

TYPE E-2

CONCRETE COMBINATION CURB AND GUTTER

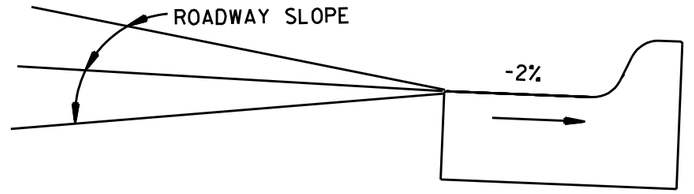

DETAIL OF GUTTER SLOPE

GUTTER SHALL BE CONSTRUCTED ON 2% SLOPE AWAY FROM ROADWAY, REGARDLESS OF ROADWAY SLOPE.

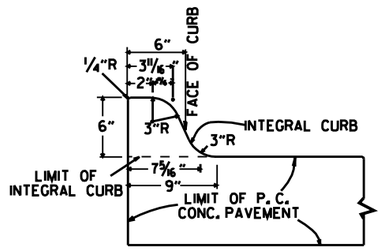

TYPE A

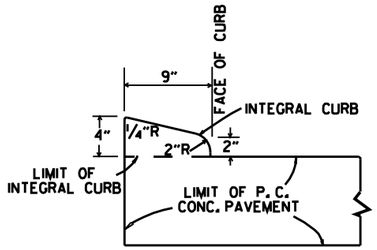

TYPE B

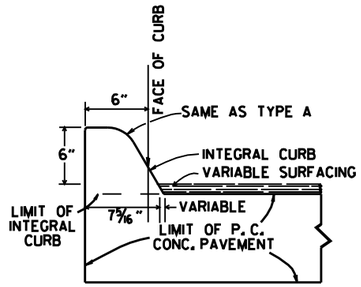

TYPE C

INTEGRAL CURB

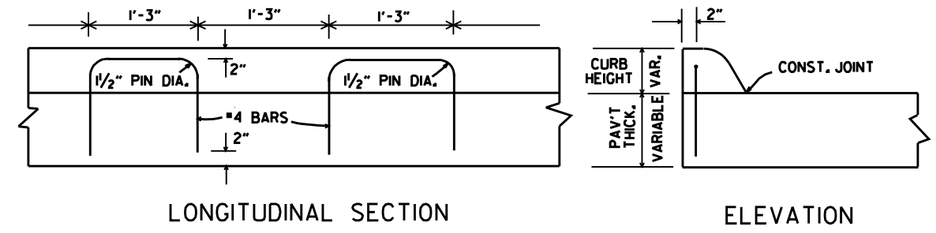

ALTERNATE CONSTRUCTION METHOD FOR INTEGRAL CURB

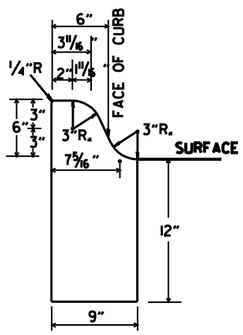

TYPE A

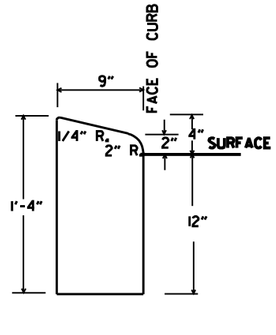

TYPE B

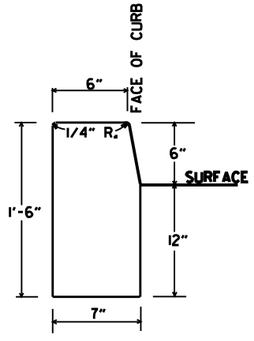

TYPE D

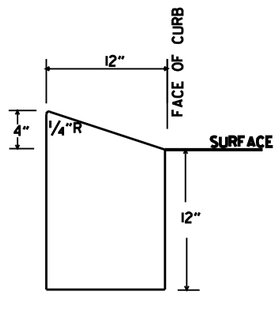

TYPE E

CONCRETE CURB

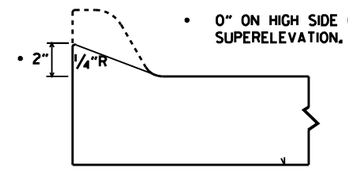

NOTE: USE MODIFIED CURB AS SPECIFIED ON STD. DR-1. COMPENSATION FOR MODIFIED CURB WILL BE CONSIDERED INCLUDED IN THE PRICE BID FOR THE TYPE OF CURB OR CURB AND GUTTER SPECIFIED.

DETAILS OF MODIFIED CURB

DATE	REVISION	DATE FILMED
11-29-07	REVISED GUTTER SLOPE & MODIFIED CURB DETAILS	
11-10-05	ADDED DETAILS OF TYPE E CURBS	
11-16-01	REVISED CONCRETE CURB TYPE B	
11-18-98	REVISED MODIFIED CURB	
6-2-94	ADDED NOTE TO SPECIAL MODIFIED CURB	
8-5-93	CORRECTED GUTTER SLOPE	8-5-93
10-1-92	ADDED DETAILS OF GUTTER SLOPE	10-1-92
5-24-90	ADDED DETAILS OF MODIFIED CURB	5-24-90
11-30-89	VARIBLE DEPTH TYPE A & B I	11-30-89
7-15-88	REVISED MODIFIED CURB	630-7-15-88
11-1-73	REVISED MODIFIED CURB	500-11-1-73
10-2-72	REVISED AND REDRAWN	52-10-2-72

ARKANSAS STATE HIGHWAY COMMISSION

CURBING DETAILS

STANDARD DRAWING CG-1

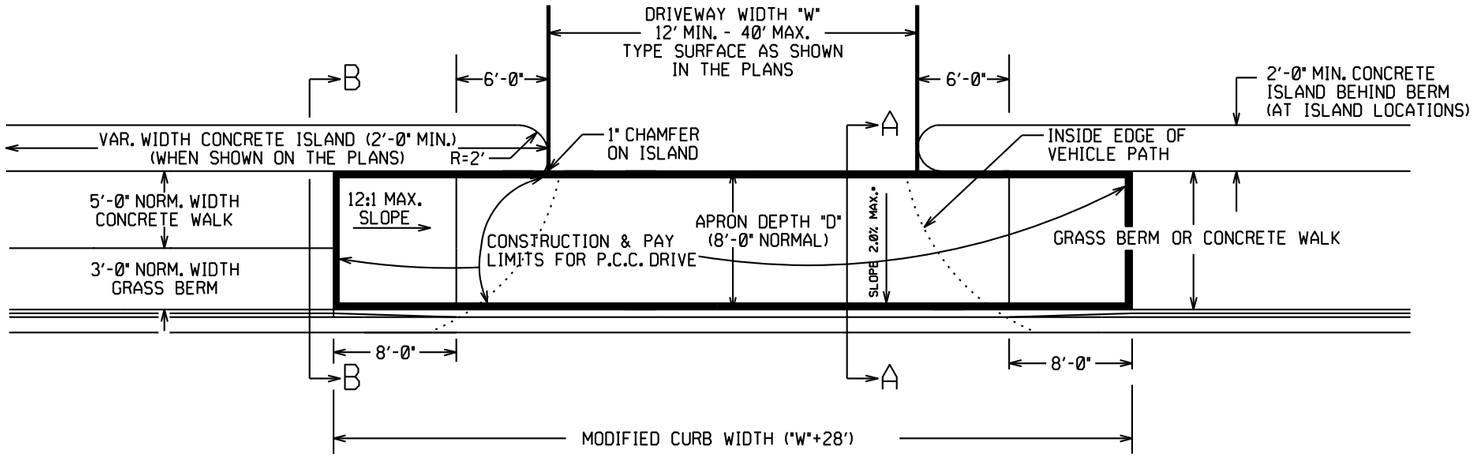

PLAN VIEW

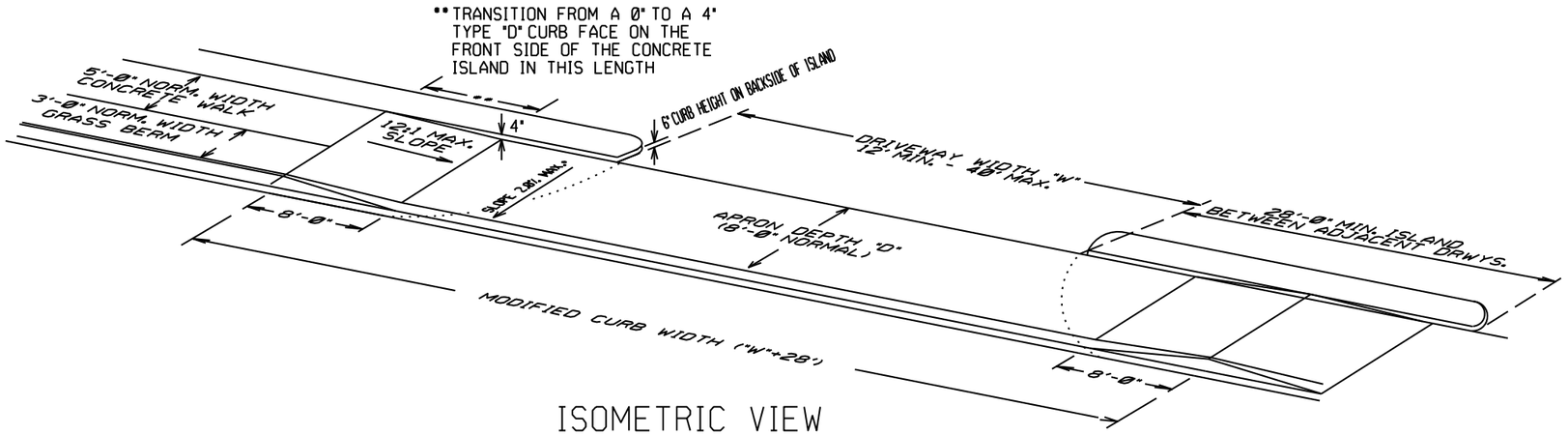

ISOMETRIC VIEW

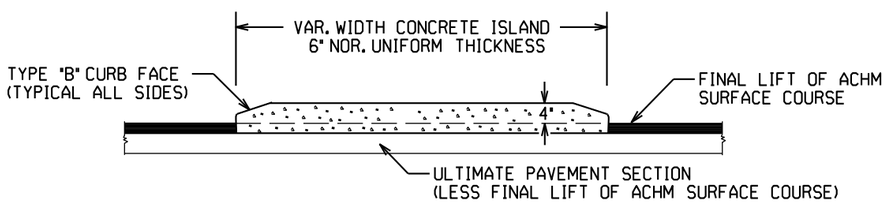

CURBED ISLANDS FOR CHANNELIZATION

CONCRETE ISLAND NOTES:

1. REFER TO PLANS FOR TYPE OF CURB FACE TO BE USED. NO DIRECT PAYMENT WILL BE MADE FOR THE CURB FACES SHOWN ON THE ISLAND DETAILS. PAYMENT FOR THE CURB FACE WILL BE INCLUDED IN THE UNIT PRICE BID FOR THE ITEM "CONCRETE ISLAND".

2. TRANSVERSE EXPANSION JOINTS, NOT LESS THAN 1/2" WIDE, SHALL BE PLACED AT MINIMUM INTERVAL OF 45'. TRANSVERSE JOINT SHALL BE CONSTRUCTED USING A JOINT FILLER COMPLYING WITH AASHTO M213.

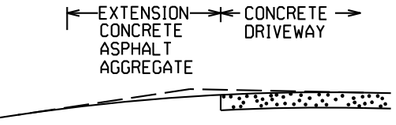

EXTENSION TYPICAL SECTIONS

1: CONCRETE - 6" P.C. CONCRETE DRIVEWAY

2: ASPHALT - 2" ACHM SURFACE COURSE (1/2")
4" ACHM BINDER COURSE (1") OR
4" ACHM BASE COURSE (1-1/2")

3: ASPHALT - 2" ACHM SURFACE COURSE (1/2")
7" AGGREGATE BASE COURSE

4: AGGREGATE - 6" AGGREGATE BASE COURSE

THE TYPE OF EXTENSION SHALL BE AS SHOWN IN THE PLANS. THE CONTRACTOR MAY, WITH THE APPROVAL OF THE ENGINEER, SUBSTITUTE A LOWER NUMBERED TYPE OF EXTENSION IN LIEU OF THE TYPE SPECIFIED IN THE PLANS, BUT AT NO ADDITIONAL COST TO THE DEPARTMENT.

DRIVEWAY EXTENSION DETAILS

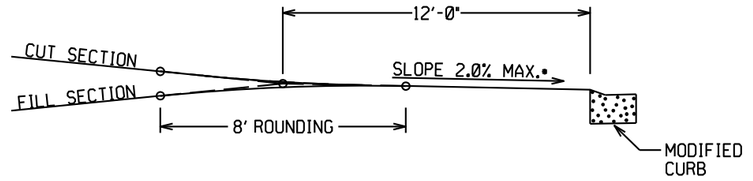

DRIVEWAY VERTICAL ALIGNMENT DETAILS

• NOTE: DRIVEWAYS MAY NOT BE SLOPED AWAY FROM THE ROADWAY UNLESS APPROVED BY THE ENGINEER.

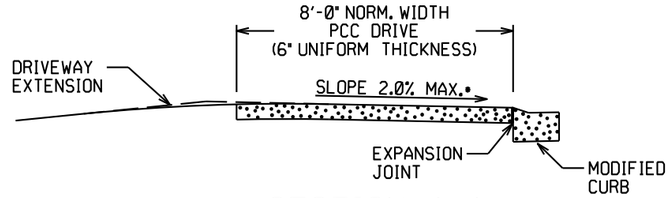

SECTION A-A

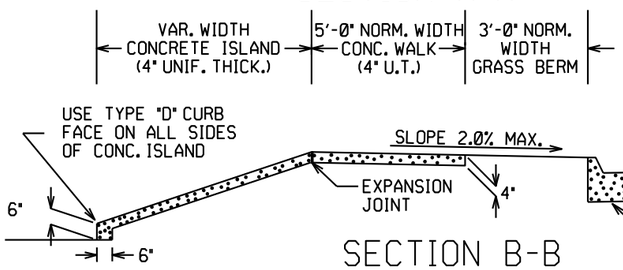

SECTION B-B
CURBED ISLAND BEHIND WALK

DATE REV	DATE FILMED	DESCRIPTION
5-19-22		REVISED ISLAND NOTES
11-07-19		REVISED WALK DETAILS
2-27-14		REVISED PLAN & ISOMETRIC VIEW
11-29-07		ADDED CHANNELIZATION ISLAND WITH TYPE C CURB FACE & REVISED DRIVEWAY SLOPE NOTE & VERTICAL ALIGNMENT DETAIL
11-10-05		REV. APRON SLOPE & DEPTH OF AGG. BASE.
8-22-02		ADDED ISLAND DETAILS & NOTES
3-30-00		REV. MOD. CURB WIDTH & TRANS. NOTE
11-19-98		REVISED NOTES
11-18-98		REDRAWN AND REISSUED

ARKANSAS STATE HIGHWAY COMMISSION

DETAILS OF DRIVEWAYS & ISLANDS

STANDARD DRAWING DR-1

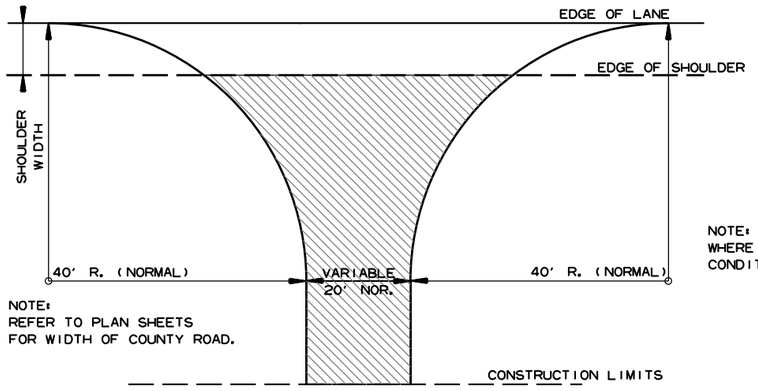

NOTE: TURNOUTS SHALL BE MODIFIED WHERE NECESSARY TO MEET LOCAL CONDITIONS AS DIRECTED BY THE ENGINEER.

ACHM SURFACE COURSE (1/2") (220 LBS. PER SQ. YD.) AND AGGREGATE BASE COURSE (CLASS 7) 7" COMP. DEPTH, UNLESS OTHERWISE SPECIFIED IN PLANS.

DETAIL FOR COUNTY ROAD TURNOUTS OPEN SHOULDER SECTION

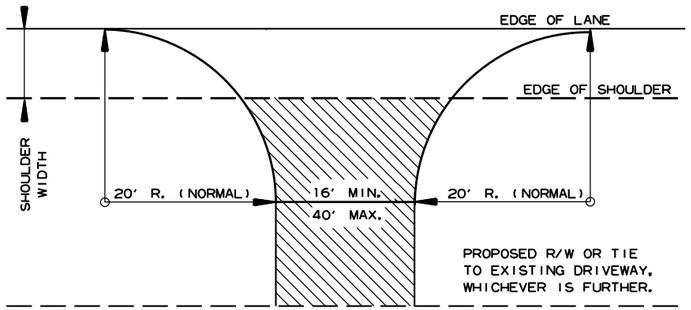

NOTE: TURNOUTS AND PRIVATE DRIVES SHALL BE MODIFIED WHERE NECESSARY TO MEET LOCAL CONDITIONS AS DIRECTED BY THE ENGINEER.

ACHM SURFACE COURSE (1/2") (220 LBS. PER SQ. YD.) AND AGGREGATE BASE COURSE (CLASS 7) 7" COMP. DEPTH IF ASPHALT OR GRAVEL DRIVE EXISTING; OR 6" CONCRETE IF CONCRETE DRIVE EXISTING.

DETAIL FOR DRIVEWAY TURNOUTS OPEN SHOULDER SECTION (ARTERIALS)

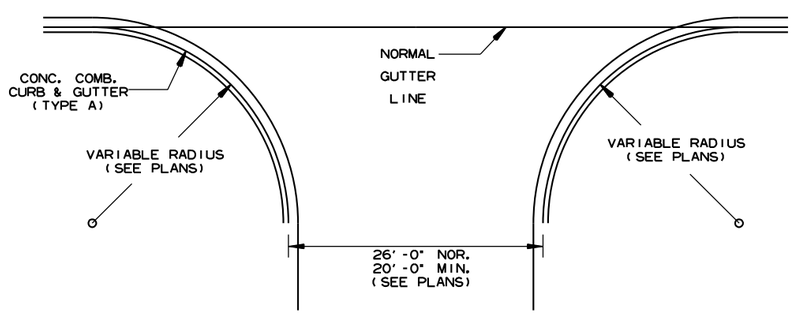

DETAIL OF TURNOUTS, ASPHALT STREETS, COUNTY ROADS & STATE HIGHWAYS CURB & GUTTER SECTION

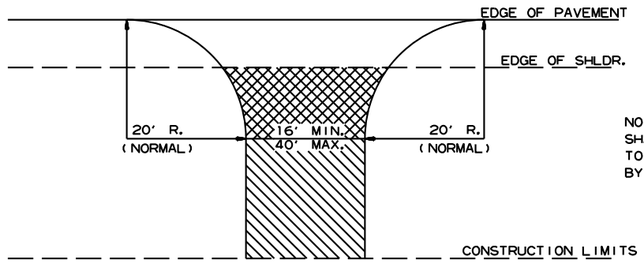

NOTE: TURNOUTS AND PRIVATE DRIVES SHALL BE MODIFIED WHERE NECESSARY TO MEET LOCAL CONDITIONS AS DIRECTED BY THE ENGINEER.

ASPHALT CONCRETE HOT MIX SURFACE COURSE (220 LBS. PER SQ. YD.) AGGREGATE BASE COURSE (CLASS 7) 7" COMP. DEPTH IF ASPHALT DRIVE EXIST OR 6" CONCRETE IF CONCRETE DRIVE EXIST.

AGGREGATE BASE COURSE (CLASS 7) 9" COMP. DEPTH OR CONFORM TO EXISTING DRIVEWAY

DETAIL FOR DRIVEWAY TURNOUTS (COLLECTORS)

DATE REV	DATE FILMED	DESCRIPTION
5-19-22		ISSUED

ARKANSAS STATE HIGHWAY COMMISSION

DETAILS OF DRIVEWAYS & STREET TURNOUTS

STANDARD DRAWING DR-2

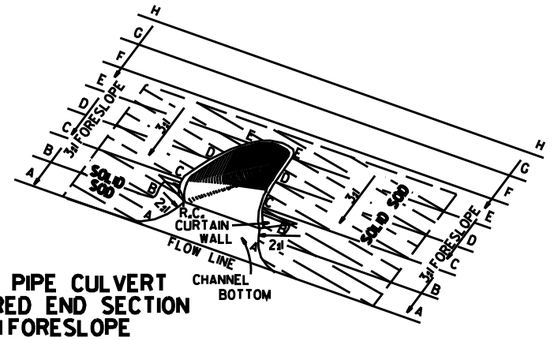

TYPICAL PIPE CULVERT
WITH FLARED END SECTION
& 3:1 FORESLOPE

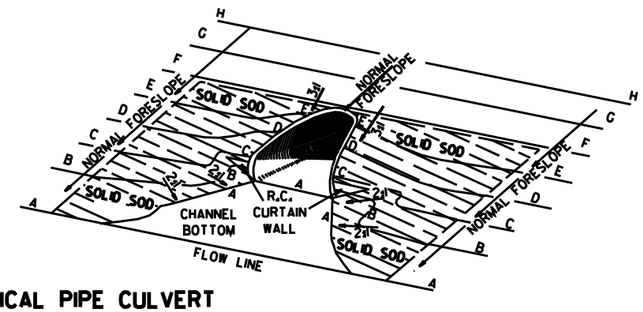

TYPICAL PIPE CULVERT
WITH FLARED END SECTION
& FLATTENED ADJACENT SLOPES

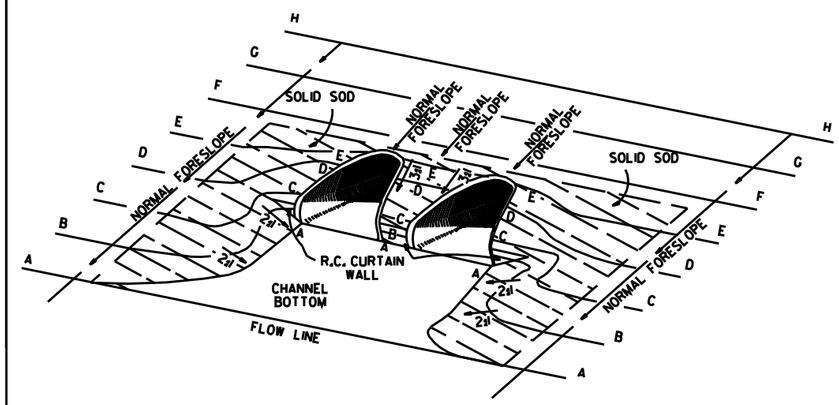

TYPICAL MULTIPLE PIPE CULVERT
WITH FLARED END SECTIONS
& FLATTENED ADJACENT SLOPES

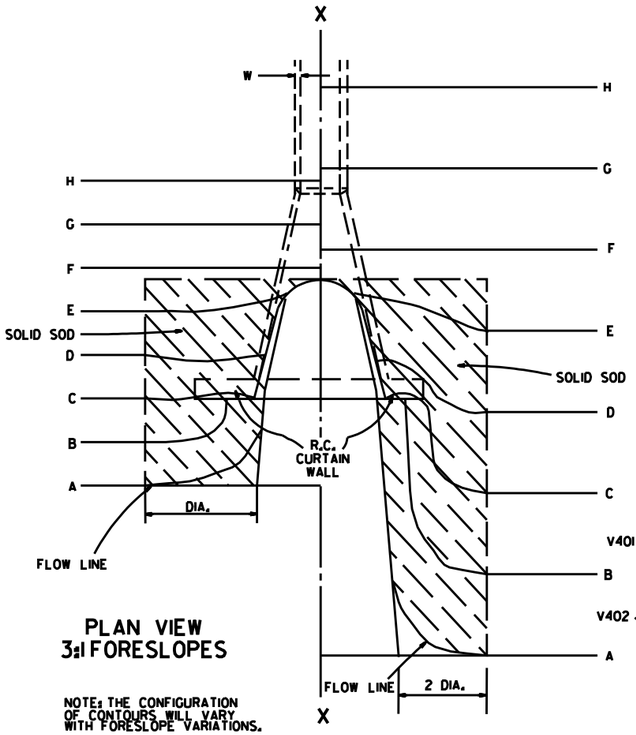

PLAN VIEW
3:1 FORESLOPES

NOTE: THE CONFIGURATION OF CONTOURS WILL VARY WITH FORESLOPE VARIATIONS.

PLAN VIEW
FLATTENED FORESLOPES

R.C. CURTAIN WALL
DIMENSIONS & QUANTITIES

PIPE DIA.	H_1	L_1	L	L (DBL.)/2	SINGLE R.C.P.C.		DOUBLE R.C.P.C.	
					CONC.	REINF. STEEL	CONC.	REINF. STEEL
					CU. YDS.	LBS.	CU. YDS.	LBS.
18"	11½"	3'-5"	8'-0"	6'-3"	0.31	27.7	0.45	39.5
24"	1'-0½"	4'-6"	9'-6"	7'-6"	0.37	33.4	0.53	48.0
30"	1'-3½"	5'-7"	11'-0"	9'-0"	0.45	39.0	0.67	59.0
36"	1'-7"	6'-8"	13'-0"	10'-6"	0.58	52.6	0.83	73.9
42"	2'-1½"	7'-3"	15'-6"	12'-0"	0.82	77.1	1.10	100.7
48"	2'-5"	7'-10"	17'-0"	13'-0"	0.98	94.9	1.27	120.4
54"	2'-9½"	8'-5"	18'-6"	14'-0"	1.16	115.8	1.47	143.7
60"	3'-4"	9'-0"	20'-6"	15'-6"	1.47	149.7	1.84	180.3
72"	4'-5"	10'-2"	25'-6"	18'-6"	2.31	232.6	2.73	271.0

NOTE: QUANTITIES SHOWN ARE FOR ONE (1) CURTAIN WALL.

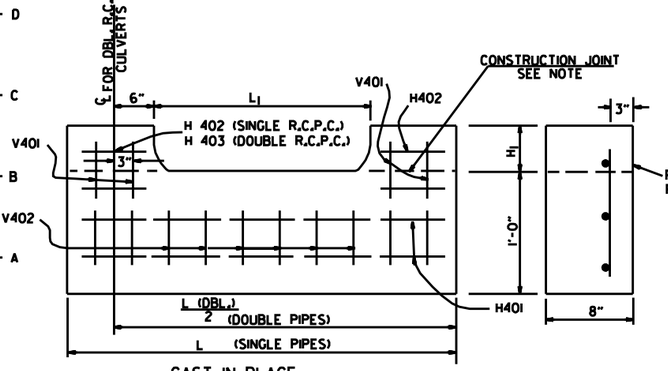

CAST-IN-PLACE

NOTE: THE PORTION OF THE R.C. CURTAIN WALL BENEATH THE FLARED END SECTION (LOWER 1'-0") SHALL BE PLACED MONOLITHICALLY. THE FLARED END SECTION SHALL THEN BE SET IN PLACE & THE REMAINING PORTIONS OF THE R.C. CURTAIN WALL PLACED.

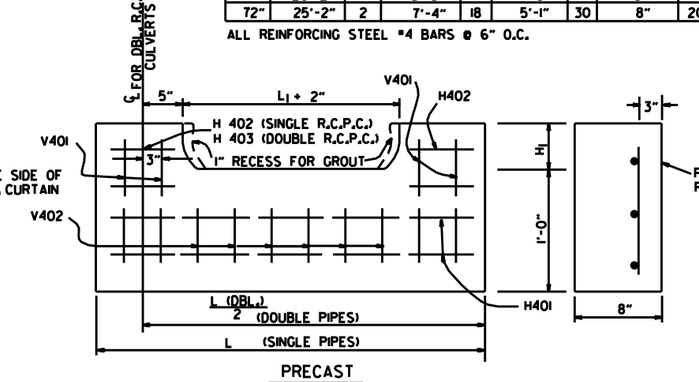

PRECAST

NOTE: THE PRECAST CURTAIN WALL WILL BE SET AND BACKFILLED WITH COMPACTED MATERIAL. THE FLARED END SECTION SHALL THEN BE SET IN PLACE AND THE 1" RECESS FILLED WITH GROUT. WHERE "L" EXCEEDS 11' THE CURTAIN WALL MAY BE CAST IN TWO (2) OR MORE SECTIONS. THE METHOD OF JOINING THE SECTIONS FOR INSTALLATION SHALL BE APPROVED BY THE ENGINEER.

R.C. CURTAIN WALL DETAILS

REINFORCING STEEL SCHEDULE

PIPE DIA.	SINGLE R.C. PIPE CULVERT								DOUBLE R.C. PIPE CULVERT									
	H401		H402		V401		V402		H401		H402		H403		V401		V402	
	L	NO.	L	NO.	L	NO.	L	NO.	L	NO.	L	NO.	L	NO.	L	NO.	L	NO.
18"	7'-8"	2	1'-11½"	4	1'-7½"	8	8"	8	12'-2"	2	1'-11½"	4	8"	2	1'-7½"	10	8"	14
24"	9'-2"	2	2'-2"	4	1'-8½"	10	8"	9	14'-8"	2	2'-2"	4	8"	2	1'-8½"	12	8"	18
30"	10'-8"	2	2'-4½"	4	1'-11½"	10	8"	12	17'-8"	2	2'-4½"	4	8"	2	1'-11½"	14	8"	22
36"	12'-8"	2	2'-10"	6	2'-3"	12	8"	14	20'-8"	2	2'-10"	6	8"	3	2'-3"	14	8"	28
42"	15'-2"	2	3'-9½"	8	2'-9½"	16	8"	15	23'-8"	2	3'-9½"	8	8"	4	2'-9½"	18	8"	30
48"	16'-8"	2	4'-3"	10	3'-1"	18	8"	16	25'-8"	2	4'-3"	10	8"	5	3'-1"	20	8"	32
54"	18'-2"	2	4'-8½"	12	3'-5½"	20	8"	17	27'-8"	2	4'-9"	12	8"	6	3'-5½"	22	8"	34
60"	20'-2"	2	5'-5"	14	4'-0"	24	8"	18	30'-8"	2	5'-5"	14	8"	7	4'-0"	26	8"	36
72"	25'-2"	2	7'-4"	18	5'-1"	30	8"	20	36'-8"	2	7'-4"	18	8"	9	5'-1"	33	8"	40

ALL REINFORCING STEEL #4 BARS @ 6" O.C.

SOLID SODDING

PIPE DIA.	SINGLE R.C.P.C.			DOUBLE R.C.P.C.		
	3:1	4:1	6:1	3:1	4:1	6:1
	SQ. YDS.			SQ. YDS.		
18"	5	7	12	6	8	13
24"	8	12	19	9	13	20
30"	13	18	29	14	19	30
36"	17	26	41	18	28	43
42"	23	35	55	25	37	57
48"	29	46	68	31	48	70
54"	35	57	85	37	59	87
60"	45	62	104	48	65	107
72"	64	92	156	67	95	159

NOTE: QUANTITIES SHOWN ABOVE ARE FOR ONE (1) END OF F.E.S.

GENERAL NOTES

1. A CAST-IN-PLACE OR PRECAST CURTAIN WALL MAY BE USED. PAYMENT FOR THE CURTAIN WALL SHALL BE CONSIDERED TO BE INCLUDED IN THE UNIT PRICE BID EACH FOR FLARED END SECTIONS OF THE SEVERAL SIZES, WHICH PRICE SHALL BE FULL COMPENSATION FOR FURNISHING ALL MATERIALS INCLUDING REINFORCING STEEL AND CONCRETE; FOR FORMS, MIXING AND PLACING; FOR EXCAVATION AND BACKFILL, AND FOR ALL LABOR, TOOLS, EQUIPMENT AND INCIDENTALS NECESSARY TO COMPLETE THE WORK.
2. ALL EXPOSED EDGES SHALL BE CHAMFERED ¾".
3. CONCRETE FOR CURTAIN WALL SHALL MEET THE REQUIREMENTS FOR CLASS A OR S CONCRETE AS PROVIDED IN SECTION 802 OF THE STANDARD SPECIFICATIONS OR FOR PAVING CONCRETE AS PROVIDED IN SECTION 501 OF THE STANDARD SPECIFICATIONS.
4. WELDED WIRE MESH 3 x 3 W10 x W10 MAY BE USED IN LIEU OF REINFORCING BARS.

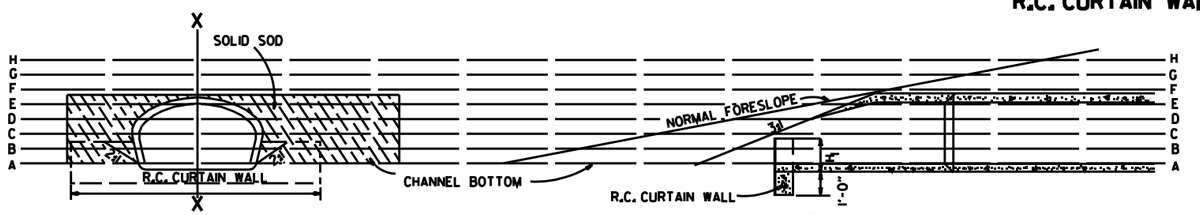

END VIEW

SECTIONAL VIEW "X-X"

DATE	REVISION	FILMED
10-18-96	ADDED NOTE TO SOLID SODDING	
10-12-95	CORRECTED SPELLING	
11- 3-94	ADDED GENERAL NOTE NO. 4	
8-15-91	REV. CURTAIN WALL QUANT. STEEL SCH. & SOLID SOD QUANT.	
3-2-81	ALLOW PRECAST IN 2 OR MORE PIECES CHAMFER EDGES	
5-15-80	ADDED PRECAST WALL & GENERAL NOTES	
10-2-72	REVISED AND REDRAWN	

ARKANSAS STATE HIGHWAY COMMISSION

FLARED END SECTION

STANDARD DRAWING FES-1

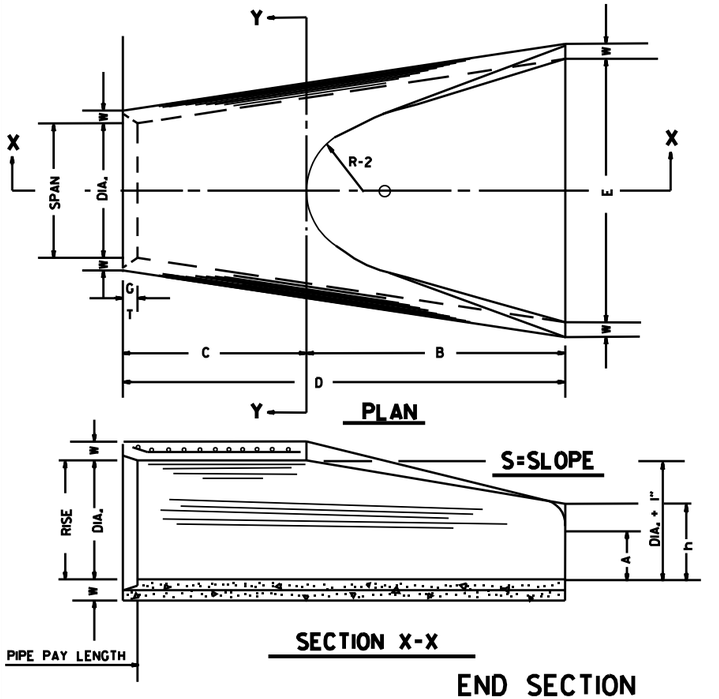

END SECTION
FOR REINFORCED CONCRETE PIPE CULVERTS

TABLE OF DIMENSIONS

DIA.	WALL	A	B	C	D	E	S	DIA. + 1"	P	R-1	R-2	G-T	WT.	h
18"	2½"	9"	2'-3"	3'-10"	6'-1"	3'-0"	3st	19"	29"	15½"	12"	2"	1000	1'-0½"
24"	3"	9½"	3'-7½"	2'-6"	6'-1½"	4'-0"	3st	25"	33 3/16"	16 1/16"	14"	2½"	1600	1'-1½"
30"	3½"	1'-0"	4'-6"	1'-7¾"	6'-1¾"	5'-0"	3st	31"	37"	18½"	15"	3¼"	1940	1'-4 5/16"
36"	4"	1'-3"	5'-3"	2'-10¾"	8'-1¾"	6'-0"	3st	37"	47 1/16"	24 5/16"	20"	3½"	4100	1'-8"
42"	4½"	1'-9"	5'-3"	2'-11"	8'-2"	6'-6"	3st	43"	53 1/16"	27½"	22"	3½"	5380	2'-2½"
48"	5"	2'-0"	6'-0"	2'-2"	8'-2"	7'-0"	3st	49"	56½"	28½"	22"	3½"	6550	2'-6"
54"	5½"	2'-4"	6'-6"	1'-10"	8'-4"	7'-6"	3st	55"	65½"	33 1/16"	24"	4"	8750	2'-10½"
60"	6"	2'-10"	6'-6"	1'-10"	8'-4"	8'-0"	3st	61"	72½"	36 11/16"	24"	4"	9270	3'-5"
72"	7"	3'-10"	6'-6"	1'-10"	8'-4"	9'-0"	3st	73"	77 1/16"	38 5/16"	24"	5"	13250	4'-6"

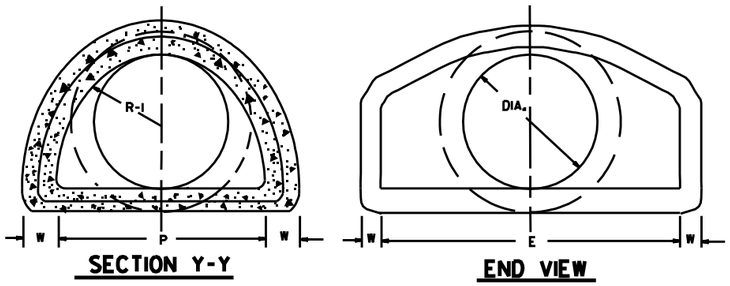

NOTE: TONGUE END ON UPSTREAM SECTION
GROOVE END ON DOWNSTREAM SECTION

ARCH PIPE

EQUIV. DIA.	• SPAN AASHTO M 206	• SPAN AHD NOMINAL	• RISE AASHTO M 206	• RISE AHD NOMINAL	W	A	B	C	D	E	P	R2	G-T	S
	INCHES													
15	18	18	11	11	2"	4"	2'-0"	4'-0"	6'-0"	3'-0"	29"	12"	1½"	2½st
18	22	22	13½	14	2½"	5"	2'-0"	4'-1"	6'-1"	3'-6"	32⅛"	13"	2½"	2½st
21	26	26	15½	16	2¾"	7"	2'-3"	3'-10"	6'-1"	4'-0"	34⅛"	14"	2½"	2½st
24	28½	29	18	18	3"	9"	2'-3"	3'-10"	6'-1"	5'-0"	36 5/16"	15"	2½"	2½st
30	36¼	36	22½	23	3½"	10"	3'-1"	3'-0½"	6'-1½"	6'-0"	47 1/16"	20"	3"	2½st
36	43¾	44	26⅝	27	4"	10½"	4'-0"	2'-1½"	6'-1½"	6'-6"	54 5/16"	22"	3½"	2½st
42	51⅛	51	31⅝	31	4½"	11½"	4'-7"	1-10¼"	6'-5¼"	7'-2"	59½"	23"	3¾"	2½st
48	58½	59	36	36	5"	1'-3"	5'-3"	2'-10¾"	8'-1¾"	7'-10"	70 3/16"	24"	4¼"	2½st
54	65	65	40	40	5½"	1'-7"	5'-3"	2'-11"	8'-2"	8'-6"	72 1/16"	24"	4¾"	2½st
60	73	73	45	45	6"	1'-10"	5'-6"	2'-8"	8'-2"	9'-0"	77 1/16"	24"	5"	2½st

• THE MEASURED SPAN AND RISE SHALL NOT VARY MORE THAN ± 2 PER CENT FROM THE VALUES SPECIFIED BY AASHTO M 206.

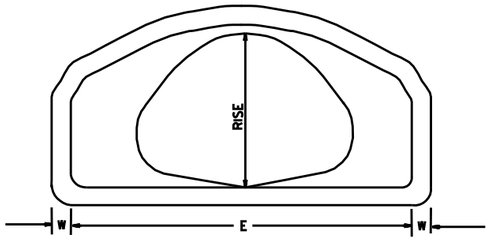

END VIEW
CONCRETE ARCH PIPE

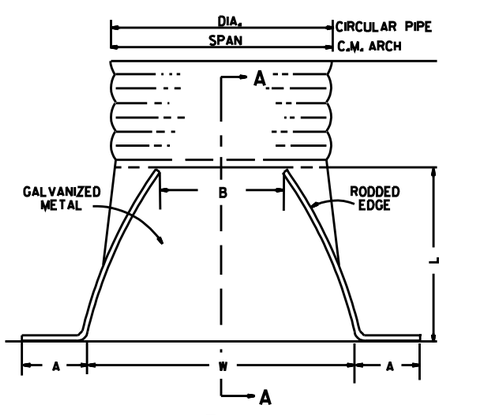

NOTE: ALTERNATE CONNECTIONS TO THE PIPE CULVERTS, IN ACCORDANCE WITH MANUFACTURER'S STANDARD PRACTICES, MAY BE MADE SUBJECT TO THE APPROVAL OF THE ENGINEER.

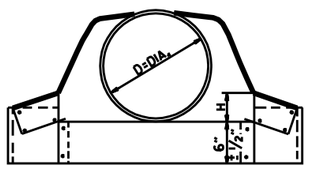

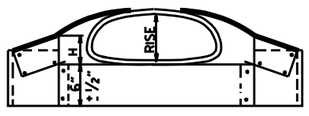

CIRCULAR PIPE

D. DIA.	GAUGE	A 1" ±	B. MAX.	H 1" ±	L 1½" ±	W 2" ±	S
		INCHES					
12	16	6	6	6	21	24	2½st
15	16	7	8	6	26	30	2½st
18	16	8	10	6	31	36	2½st
21	16	9	12	6	36	42	2½st
24	16	10	13	6	41	48	2½st
30	14	12	16	8	51	60	2½st
36	14	14	19	9	60	72	2½st
42	12	16	22	11	69	84	2½st
48	12	18	27	12	78	90	2½st
54	12	18	30	12	84	102	2st
60	12	18	33	12	87	114	1½st
66	12	18	36	12	87	120	1½st
72	12	18	39	12	87	126	1 1/3st

C.M. ARCH PIPE

EQUIV. DIA.	SPAN	RISE	A 1" ±	B MAX.	H 1" ±	L 1½" ±	W 2" ±	S	GAUGE
	INCHES								
15"	17	13	7	9	6	19	30	2½st	16
18"	21	15	7	10	6	23	36	2½st	16
21"	24	18	8	12	6	28	42	2½st	16
24"	28	20	9	14	6	32	48	2½st	16
30"	35	24	10	16	6	39	60	2½st	14
36"	42	29	12	18	8	46	75	2½st	14
42"	49	33	13	21	9	53	85	2½st	12
48"	57	38	18	26	12	63	90	2½st	12
54"	64	43	18	30	12	70	102	2½st	12
60"	71	47	18	33	12	77	114	2½st	12

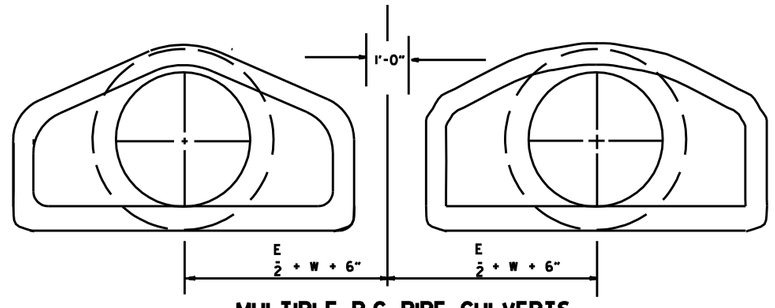

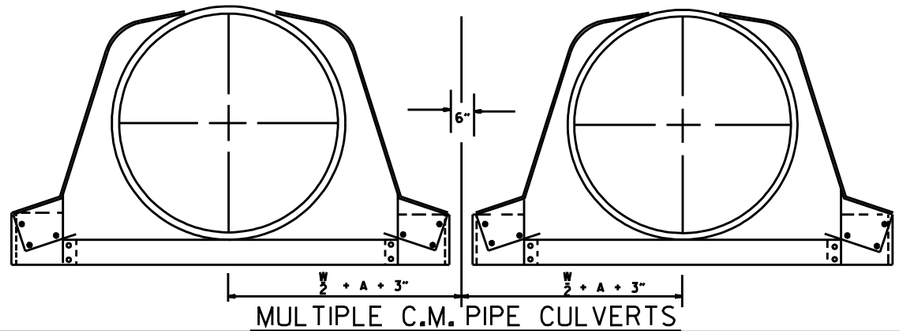

DATE	REVISION	FILMED
10-18-96	REVISED ASTM REF. TO AASHTO	
5-15-80	REVISED DISTANCE BETWEEN MULTIPLE R.C.P. F.E.S.	664-5-15-80
7-14-78	C.M. ARCH SIZES TO CONFORM WITH AASHTO SIZES	752-7-14-78
8-22-75	ADDED MULTIPLE PIPE CULVERTS	517-8-22-75
12-5-74	REMOVED NOTE RE REINF. FOR R.C. F.E.S.	500-12-5-74
5-24-73	CMP END SECTION, SHOW PIPE PAY LENGTH	627-5-24-73
10-2-72	REVISED AND REDRAWN	760-10-2-72

ARKANSAS STATE HIGHWAY COMMISSION

FLARED END SECTION

STANDARD DRAWING FES-2

END SECTIONS FOR CORRUGATED METAL PIPE CULVERTS

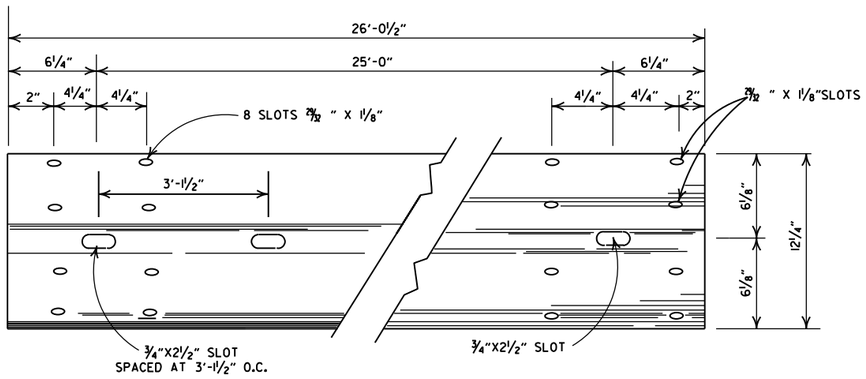

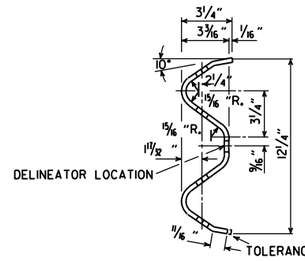

DETAILS OF W-BEAM GUARDRAIL

RAIL SECTION OF CLOSELY SIMILAR DIMENSIONS AND COMPARABLE STRENGTH MAY BE SUBSTITUTED IF APPROVED BY THE ENGINEER.

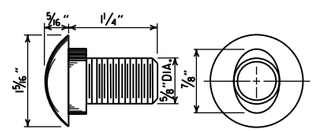

SPLICE BOLT
POST BOLT - SAME EXCEPT LENGTH

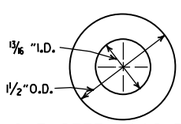

CUT STEEL WASHER

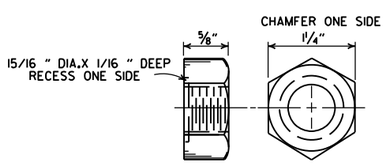

NUT

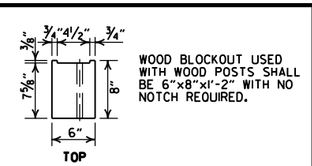

WOOD BLOCKOUT USED WITH WOOD POSTS SHALL BE 6"x8"x1'-2" WITH NO NOTCH REQUIRED.

WOOD BLOCKOUT (W-BEAM)

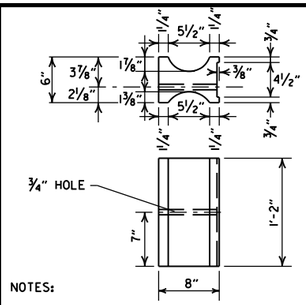

NOTES:

1. SIMILAR SHAPED PLASTIC BLOCKOUTS MAY BE USED AS LONG AS THEY MEET REQUIREMENTS FOR MANUAL FOR ASSESSING SAFETY HARDWARE (MASH).
2. DIMENSIONS ARE SUBJECT TO MANUFACTURERS TOLERANCES.

PLASTIC BLOCKOUT (W-BEAM)

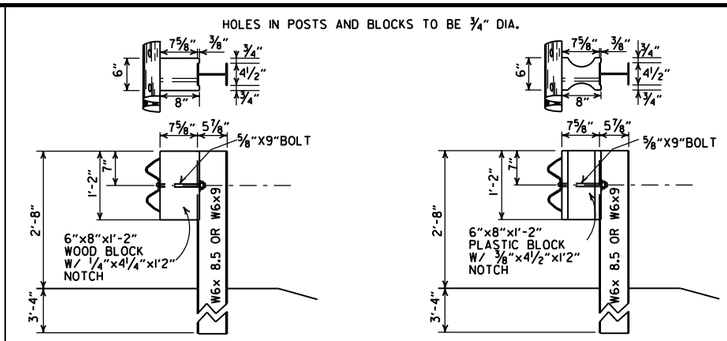

WOOD BLOCKOUT CONNECTIONS

PLASTIC BLOCKOUT CONNECTIONS

DETAILS OF STEEL LINE POST CONNECTIONS (W-BEAM)

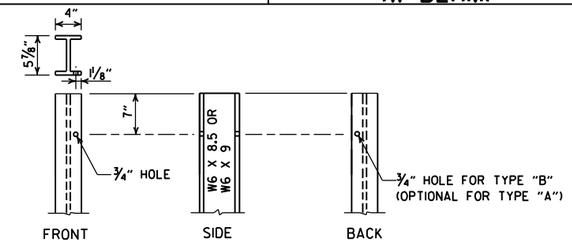

STEEL POST

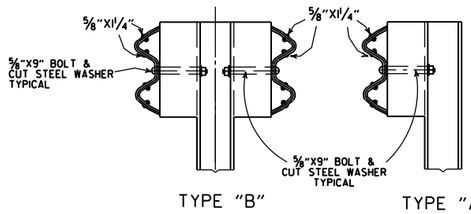

TYPE "B" TYPE "A"

DETAILS OF STEEL LINE POST CONNECTIONS (W-BEAM)

-GENERAL NOTES-

ALL BOLTS SHALL BE SUFFICIENT LENGTH TO EXTEND THROUGH THE FULL THICKNESS OF THE NUT AND NO MORE THAN ¾" BEYOND IT.

WHERE W-BEAM GUARDRAIL CONTINUES, THE INTERMEDIATE SECTIONS SHALL HAVE A POST SPACING OF 6'-3" UNLESS OTHERWISE NOTED.

W-BEAM GUARDRAIL REPRESENTING INTERMEDIATE SECTIONS WILL BE MEASURED ALONG THE ROADWAY FACE FROM CENTERLINE OF POST TO CENTERLINE OF POST.

USE W-BEAM GUARDRAIL COMPONENTS OF SAME MATERIAL FOR ENTIRE JOB. FOR EXTENSIONS OR MODIFICATION OF EXISTING GUARDRAIL, W-BEAM GUARDRAIL COMPONENTS OF THE SAME TYPE AS THOSE EXISTING SHALL BE USED.

ANY BACKFILLING UNDER OR AROUND POST SHALL BE DAMP SAND THOROUGHLY TAMPED IN PLACE.

WOOD POSTS & WOOD BLOCKS SHALL BE EITHER DENSE NO. 1 STRUCTURAL OR BETTER 9.7f (1400 f) OR NO. 1 1350 f SOUTHERN PINE.

CONTRACTOR SHALL HAVE THE OPTION OF USING WOOD BLOCKOUTS FOR W-BEAM GUARDRAIL OR PLASTIC BLOCKOUTS, AS LONG AS BLOCKOUT USED MEETS REQUIREMENTS FOR MANUAL FOR ASSESSING SAFETY HARDWARE (MASH) FOR W-BEAM GUARDRAIL.

DELINEATORS SHALL BE MOUNTED AT 37.5' SPACING ON THE FRONT FACE OF THE GUARDRAIL. SPACING MAY BE REDUCED IN CURVES, AS DIRECTED BY THE ENGINEER. COLOR SHALL BE IN ACCORDANCE WITH THE MANUAL ON UNIFORM TRAFFIC CONTROL DEVICES. PAYMENT FOR DELINEATORS SHALL BE CONSIDERED INCLUDED IN THE PRICE BID PER LIN. FT. FOR GUARDRAIL.



POSTS AND BLOCKS TO BE ROUGH SAWN 6"X8" WITH A TOLERANCE OF + OR - ¼".

WOOD BLOCKOUT CONNECTIONS

PLASTIC BLOCKOUT CONNECTIONS

DETAILS OF WOOD LINE POST CONNECTIONS (W-BEAM)

DATE	REVISION	FILMED
05-19-22	REVISED GENERAL NOTES, ADDED DELINEATOR LOCATION.	
11-07-19	RENUMBERED AND RENAMED	
11-16-17	REVISED GENERAL NOTES AND RAISED GUARDRAIL HEIGHT 3"	
07-14-10	RAISED HEIGHT OF GUARDRAIL 1"	
10-15-09	ADDED REFERENCE TO MASH	
04-10-03	REVISED GENERAL NOTES	
08-22-02	REVISED DIMENSION ON WOOD & PLASTIC BLOCKOUT CONNECTIONS & STEEL POST	
11-16-01	REVISED WOOD BLOCKOUT & DETAILS OF WOOD LINE POST CONNECTIONS	
03-30-00	REMOVED GUARDRAIL AT BRIDGE ENDS	
01-12-00	ADDED PLASTIC BLOCKOUT	
08-12-98	REV. BLOCKOUTS TO WOOD, DELETED CONC. POST & REV. GENERAL NOTE, DELETED DET. OF GUARDRAIL REPLACE. BEHIND CURB & DET. OF POST PLACE. IN SOLID ROCK, & ADDED DETAILS OF STEEL LINE POST CONN. REMOVED BACK-UP PLATE, REVISED HOLES IN STEEL POLES	
04-03-97	REMOVED "LAP IN DIRECTION OF TRAFFIC" NOTE & PLACED ARROWS ON WASHERS	
10-18-96	REVISED WOOD POST NOTE	
06-02-94	ADDED ALT. STEEL POST SIZE	
08-05-93	REVISED STEEL POST SIZE	8-5-93
10-01-92	REDRAWN & REVISED	10-1-92
08-15-91	REVISED WASHER NOTE	8-15-91
08-02-90	REV. GEN. NOTE & DEPTH OF ANC. POST IN ROCK	8-2-90
07-15-88	REVISED SECTION 3 & GENERAL NOTES	
03-04-88	REV. ANCHOR POST, ELEV. NOTES & POST IN ROCK	780-3-4-88
10-30-87	REVISED WOOD LINE POST DETAIL	546-10-30-87
10-09-87	REDRAWN & REVISED	802-10-9-87

ARKANSAS STATE HIGHWAY COMMISSION

GUARDRAIL DETAILS

STANDARD DRAWING GR-6

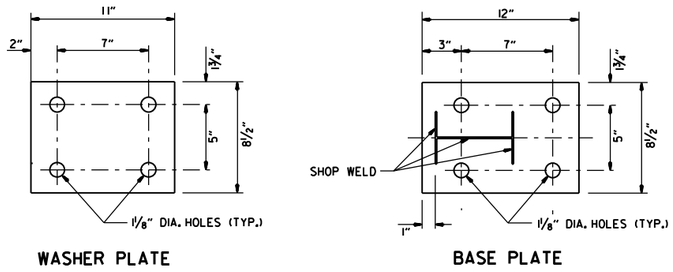

WASHER PLATE **BASE PLATE**

Note: Bolts, nuts, washers and plates shall be galvanized in accordance with Section 807 of the Standard Specifications.

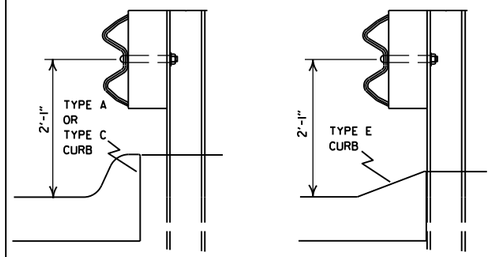

DETAIL OF GUARDRAIL PLACEMENT BEHIND CURB (W-BEAM)

FOR DESIGN SPEEDS OF 50 MPH OR LESS ALL CURB FACES, AS SHOWN ON STD. DRWG. CG-1, MAY BE USED. FOR DESIGN SPEEDS OF 55 MPH OR MORE TYPE "E" CURB FACE SHALL BE USED.

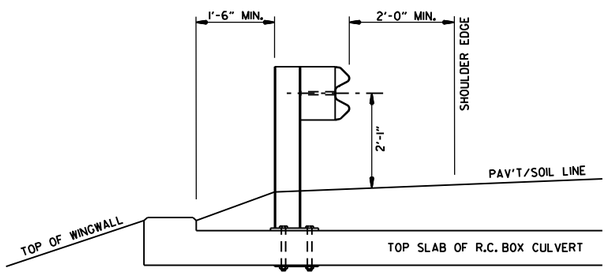

SECTION A-A

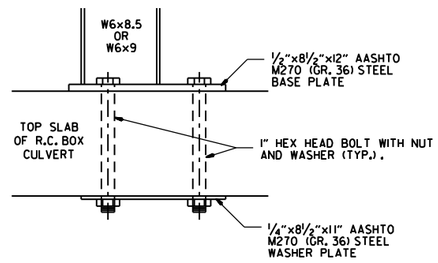

DETAIL OF CONNECTION

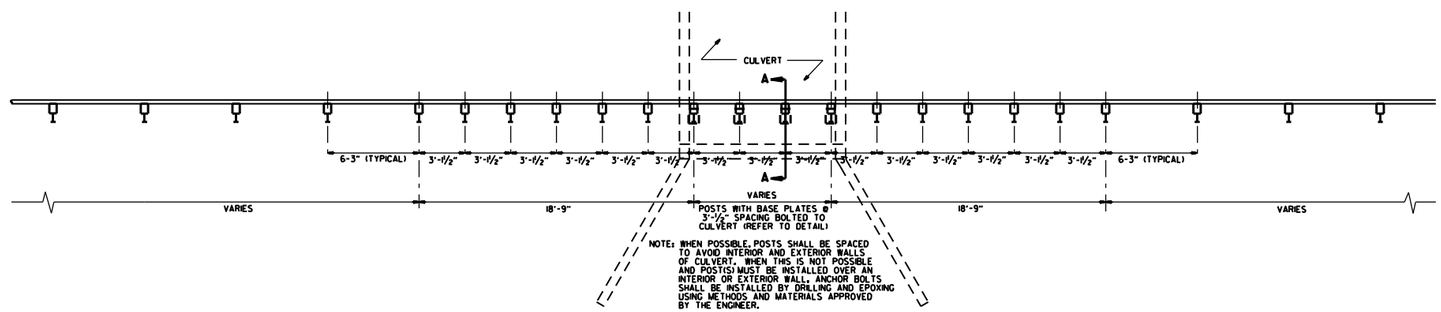

PLAN LAYOUT OF TYPE A GUARDRAIL AT LOW-FILL CULVERTS

NOTE: THIS DETAIL IS TO BE USED ONLY WHEN THE COVER OVER THE CULVERT DOES NOT PERMIT FULL EMBEDMENT OF GUARDRAIL POSTS AS SHOWN ON STD. DWG. GR-6.

Case 1

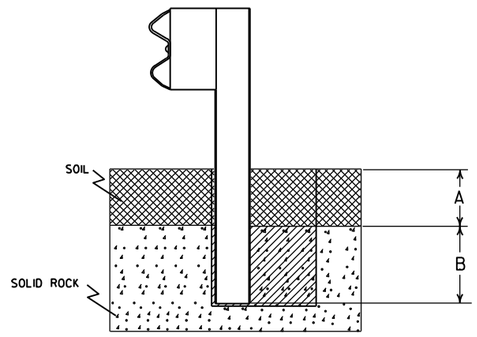

Case 2

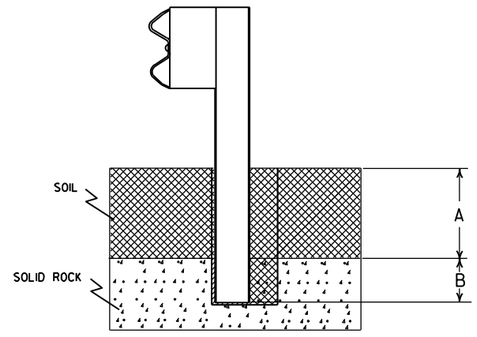

Plan View Steel Posts

Either hole configuration acceptable

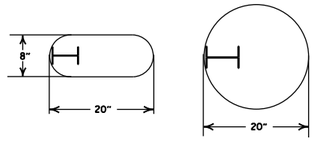

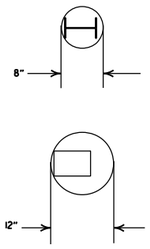

Plan View Wood Posts

Either hole configuration acceptable

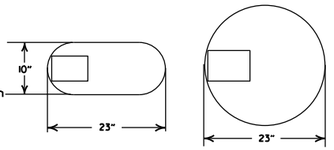

Notes: For overlying soil depths (A) ranging from 0 to 18", the depth of required drilling (B) is equal to 24".

Zone A:
Backfill according to Section 617.03(a).

Zone B:
Backfill hole in 6" lifts with material meeting the requirements of Section 802.02(c) - Alternate gradation. Compact to 95% maximum dry density per ASTM D-698.

Notes: For overlying soil depths (A) ranging from 18" to 44", the depth of required drilling (B) is equal to either 12" or 44" minus the depth of soil whichever is less.

Zone A & B:
Backfill according to Section 617.03(a).

DETAIL OF POST PLACEMENT IN SOLID ROCK (W-BEAM)

DATE	REVISION	FILMED
11-07-19	RENUMBERED, RENAMED, REVISED REFERENCE	
11-16-17	REVISED GUARDRAIL HEIGHT	
07-14-10	RAISED HEIGHT OF GUARDRAIL 1"	
04-12-07	REVISED DETAIL OF GUARDRAIL PLACEMENT BEHIND CURB	
11-10-05	ADDED GUARDRAIL PLACEMENT BEHIND CURB; REVISED DETAIL OF CONNECTION	
11-18-04	REVISED POST PLACEMENT IN ROCK & CULVERT CONNECTION DETAILS. ADDED DETAIL FOR GUARDRAIL PLACEMENT AT LOW-FILL CULVERTS	
03-30-00	REMOVED CONCRETE INSERT ANCHOR	
08-12-98	CHANGED STEEL SPACER BLOCK TO WOOD BLOCKOUT. ADDED DET. OF GUARDRAIL CONNECTION TO R.C. BOX CULV'T., DELETED DET. OF STEEL LINE POST CONN. & ADDED DET. OF GUARDRAIL PLACE. BEHIND CURB & DET. OF POSTPLACE. IN SOLID ROCK	
04-03-96	PLACED ARROWS AT CUT STEEL WASHERS	4-3-96
10-18-96	REV. ASTM REF. TO AASHTO	
11-22-95	ADDED OPTIONAL HOLES	
06-02-94	REVISED ALTERNATE POST SIZE	
08-05-93	REVISED STEEL POST SIZE	
10-01-92	REDRAWN & REVISED	10-1-92
08-02-90	DEL. WASHER ON ANCHOR ASSEMBLY	8-2-90
07-15-88	CONFORMED TO 1988 SPECS	
03-04-88	REVISED ANCHOR NOTE	
10-30-87	REVISED ANCHOR ASSEMBLY	712-10-30-87
10-30-87	REVISED PLACEMENT BEHIND CURB	547-10-30-87
10-09-87	REDRAWN & REVISED	803-10-9-87

ARKANSAS STATE HIGHWAY COMMISSION

GUARDRAIL DETAILS

STANDARD DRAWING GR-7

NOTE: GUARDRAIL WITH GUARDRAIL TERMINAL (TYPE I) TO BE INSTALLED ONLY AT LOCATIONS SHOWN ON PLANS.

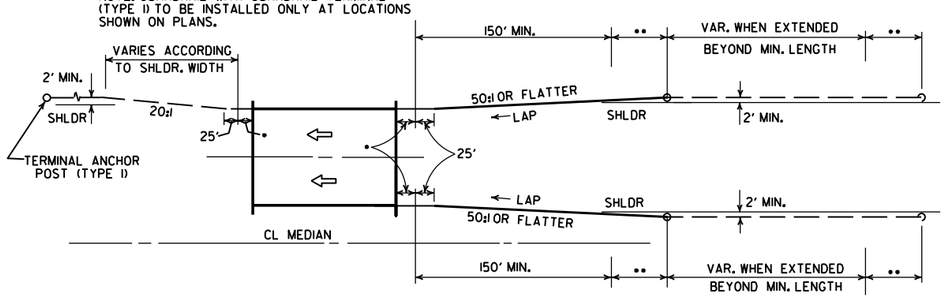

ONE-WAY TRAFFIC

••• LAP OF GUARDRAIL SHALL BE AS SHOWN FOR A DISTANCE OF UP TO 200', CHANGE TO LAP IN DIRECTION OF TRAVEL.

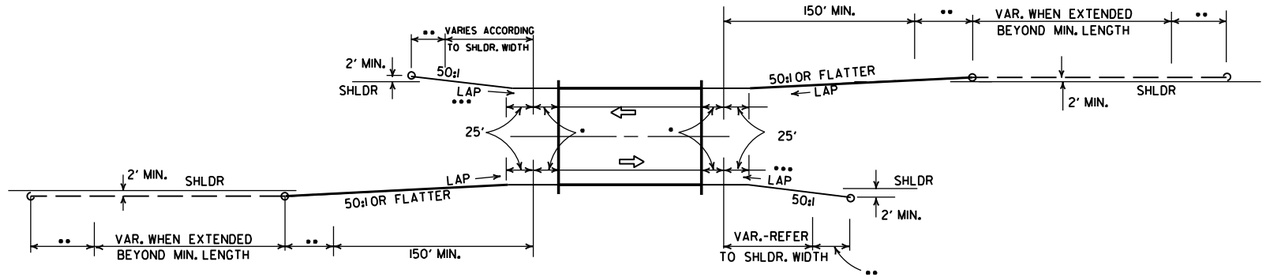

TWO-WAY TRAFFIC

METHODS OF INSTALLATION OF GUARDRAIL AT LESS THAN FULL SHOULDER WIDTH BRIDGES USING GUARDRAIL TERMINAL (TYPE 2)

••• LAP OF GUARDRAIL SHALL BE AS SHOWN FOR A DISTANCE OF UP TO 200', CHANGE TO LAP IN DIRECTION OF TRAVEL.

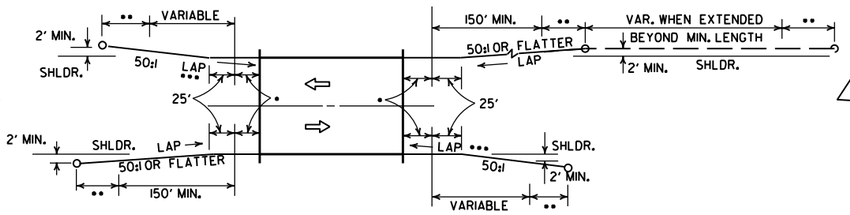

TWO-WAY TRAFFIC

NOTE: GUARDRAIL WITH GUARDRAIL TERMINAL (TYPE I) TO BE INSTALLED ONLY AT LOCATIONS SHOWN ON PLANS.

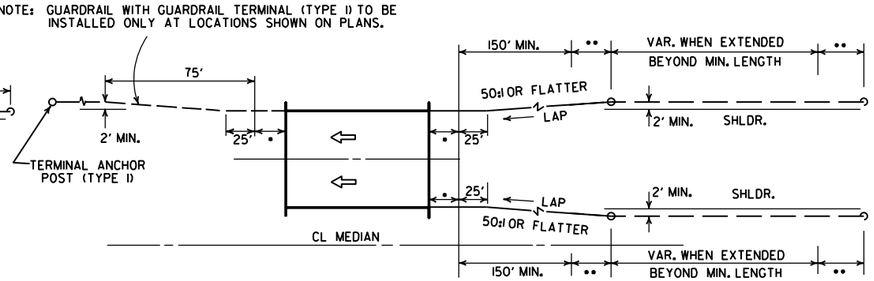

ONE-WAY TRAFFIC

METHOD OF INSTALLATION OF GUARDRAIL AT FULL SHOULDER WIDTH BRIDGES USING GUARDRAIL TERMINAL (TYPE 2)

••• LAP OF GUARDRAIL SHALL BE AS SHOWN FOR A DISTANCE OF UP TO 200', CHANGE TO LAP IN DIRECTION OF TRAVEL.

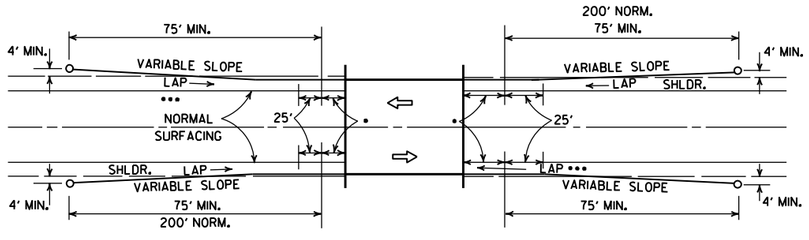

LEGEND

- THRIE BEAM GUARDRAIL TERMINAL
- •• GUARDRAIL TERMINAL (TYPE 2)

METHOD OF INSTALLATION OF GUARDRAIL USING GUARDRAIL TERMINAL (TYPE I) (FULL SHOULDER WIDTH OR LESS BRIDGES)

DATE	REVISION	DATE FILM
11-07-19	RENUMBERED AND RENAMED	
4-17-08	REVISED LAYOUTS	
11-10-05	REMOVED GUARDRAIL NOTES AND DETAILS	
11-16-01	DELETED NOTE-METHOD OF INSTALLATION OF GUARDRAIL USING GUARDRAIL TERM. (TY. I)	
1-12-00	ADDED CONSTRUCTION NOTE	1-12-00
6-26-97	REVISED LAYOUT	
10-1-92	REDRAWN & REVISED	10-1-92
	ADDED NOTE	
10-9-87	REDRAWN & REVISED	

ARKANSAS STATE HIGHWAY COMMISSION

GUARDRAIL DETAILS

STANDARD DRAWING GR-8

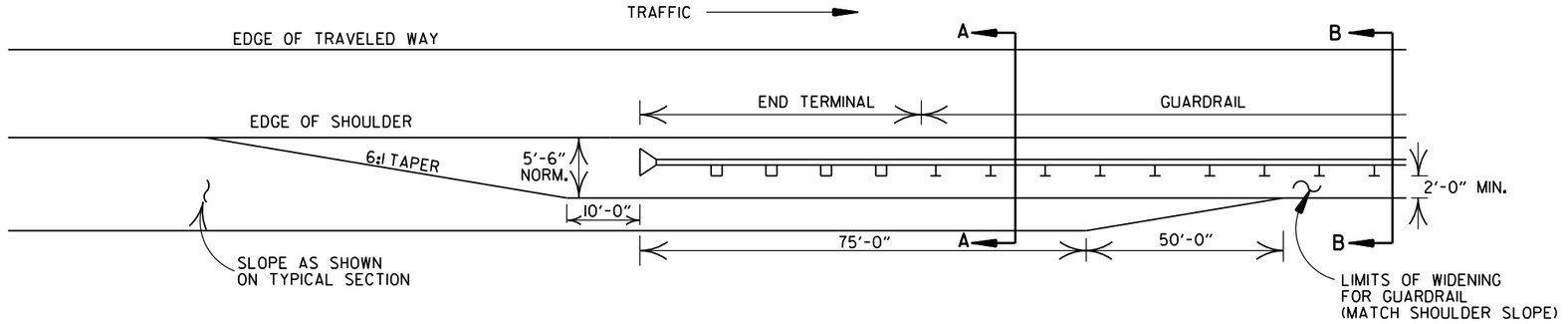

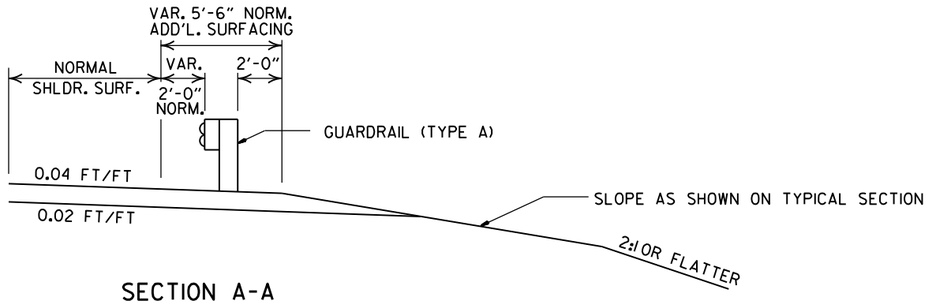

SECTION A-A

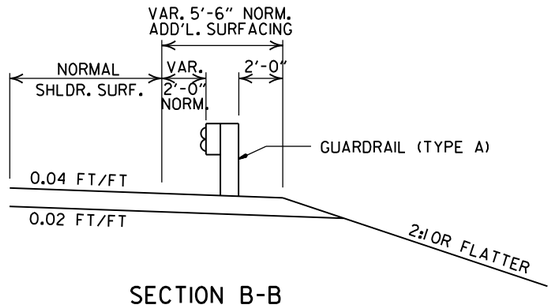

SECTION B-B

DETAILS OF WIDENING FOR GUARDRAIL

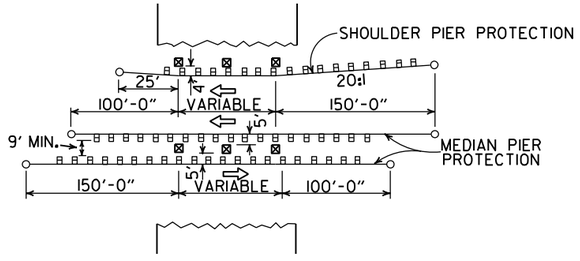

METHOD OF INSTALLATION OF GUARDRAIL AT FIXED OBSTACLE

NOTE: NORMAL SECTION TO BE WIDENED APPROX. 5'-6" EACH SIDE TO SUPPORT GUARDRAIL.

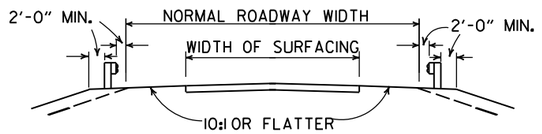

SECTION ON TANGENT

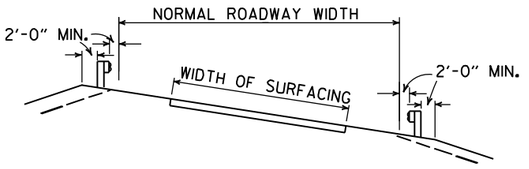

SECTION ON CURVE

DETAILS SHOWING POSITION OF GUARDRAIL ON HIGHWAY

DATE	REVISION	DATE FILM
11-07-19	RENUMBERED AND RENAMED	
4-17-08	MINOR REVISION	
11-10-05	DRAWN	

ARKANSAS STATE HIGHWAY COMMISSION

GUARDRAIL DETAILS

STANDARD DRAWING GR-9

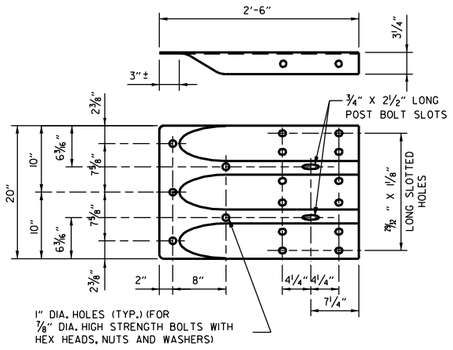

SPECIAL END SHOE

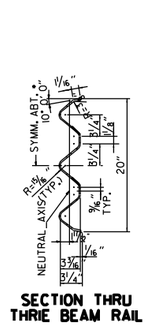

SECTION THRU THRIE BEAM RAIL

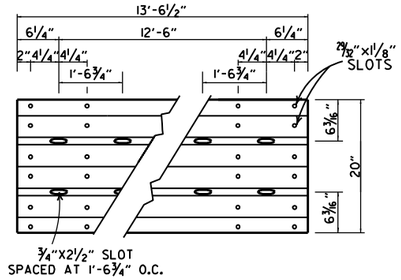

THRIE BEAM RAIL

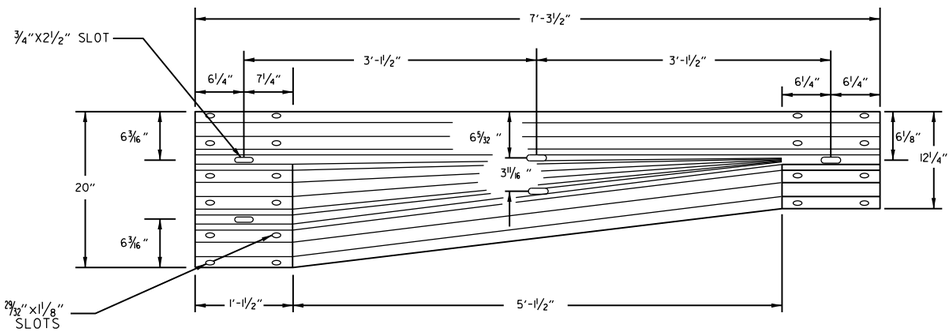

TRANSITION SECTION

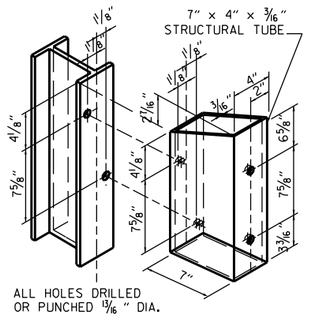

ATTACH BLOCKOUT TO POST USING ⅝" DIA. HEX HEAD BOLTS WITH 1½" O.D. CUT STEEL WASHERS AND NUT.

STRUCTURAL STEEL TUBING BLOCKOUT DETAIL

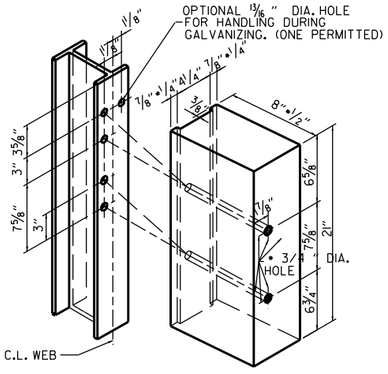

ALL HOLES 13/16" DIAMETER EXCEPT AS NOTED

HOLE PUNCHING DETAIL FOR STEEL POST & WOOD OR PLASTIC BLOCKOUTS

NOTE: BLOCKS SHALL BE THE SAME TYPE THROUGHOUT THE PROJECT LIMITS.

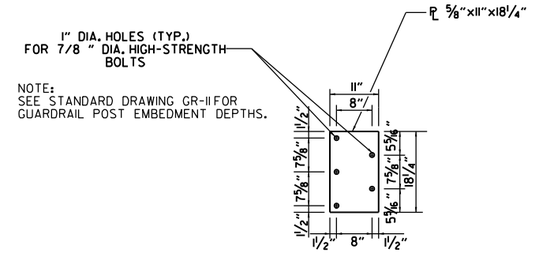

NOTE:
SEE STANDARD DRAWING GR-11 FOR GUARDRAIL POST EMBEDMENT DEPTHS.

CONNECTOR PLATE

CONNECTOR PLATE SHALL BE AASHTO M270, GR. 36 AND SHALL BE GALVANIZED AFTER FABRICATION. GALVANIZING SHALL CONFORM TO SUBSECTION 807.19 OF THE STANDARD SPECIFICATIONS. CONNECTOR PLATE TO BE BOLTED TO SPECIAL END SHOE USING ⅞" DIA. HIGH STRENGTH BOLTS, WITH THE HEADS PLACED ON THE TRAFFIC FACE. WASHERS SHALL BE USED UNDER THE HEAD AND NUT. BOLTS, NUTS AND WASHERS SHALL BE GALVANIZED AND SHALL CONFORM TO SUBSECTION 807.06.

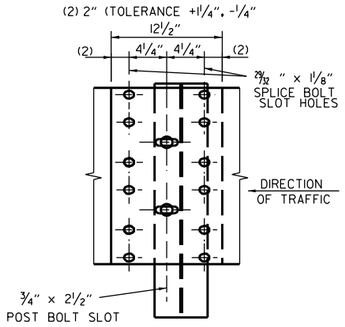

THRIE BEAM RAIL SPLICE AT POST

GENERAL NOTES:

THE THRIE BEAM RAIL, SPECIAL END SHOE, AND THE TRANSITION SECTION SHALL BE MADE OF STEEL AND SHALL BE 12 GAGE. ZINC COATING SHALL BE TYPE I.

RAIL POSTS SHALL BE SET PERPENDICULAR TO THE ROADWAY PROFILE GRADE AND VERTICALLY IN CROSS SECTION.

ALL BOLTS SHALL BE SUFFICIENT LENGTH TO EXTEND THROUGH THE FULL THICKNESS OF THE NUT AND NO MORE THAN 3*4" BEYOND IT.

ALL LAP SPLICES, INCLUDING SPECIAL END SHOES, SHALL BE MADE IN THE DIRECTION SHOWN ON STANDARD DRAWINGS GR-8 & GR-13.

REFER TO STD. DRWG. GR-11 FOR POST DETAILS.

USE THRIE BEAM GUARDRAIL COMPONENTS OF SAME MATERIAL FOR ENTIRE JOB.

THRIE BEAM POSTS SHALL BE SAME MATERIAL AS W-BEAM POSTS FOR ENTIRE JOB.

WOOD POSTS & WOOD BLOCKS SHALL BE EITHER DENSE NO. 1 STRUCTURAL OR BETTER 9.7 f (1400 f) OR NO. 1 1350 f SOUTHERN PINE.

DATE	REVISION	FILMED
11-07-19	RENAMED AND REVISED REFERENCES	
11-16-17	REVISED TRANSITION SECTION, GUARD RAIL HEIGHT, AND GENERAL NOTES; MOVED THRIE BEAM GUARD RAIL CONNECTIONS AT BRIDGES ENDS TO STD. DRWG. GR-12	
07-14-10	RAISED HEIGHT OF W-BEAM 1"	
11-29-07	ADDED PLASTIC BLOCKOUTS	
11-10-05	ADDED NOTE FOR ATTACHING STEEL BLOCKOUT	
11-18-04	REVISED GENERAL NOTES	
10-9-03	REVISED GENERAL NOTES	
04-10-03	REVISED GENERAL NOTES	
08-22-02	REVISED NOTE (2)	
06-29-00	MOVED DIMENSION LINES	
05-18-00	ADDED NOTE	
03-30-00	DRAWN & ISSUED	

ARKANSAS STATE HIGHWAY COMMISSION

GUARDRAIL DETAILS

STANDARD DRAWING GR-10

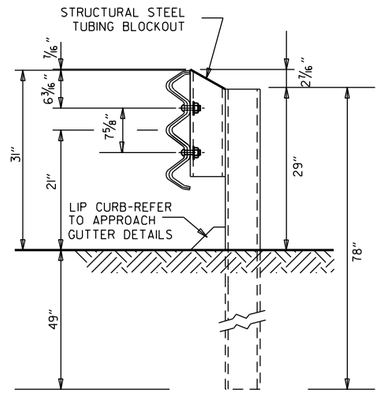

THRIE BEAM RAIL WITH STEEL TUBING BLOCKOUT
AND STEEL POST
POSTS 1-7

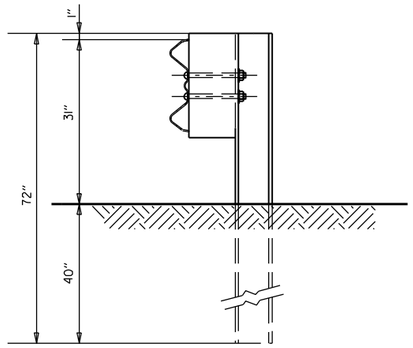

W-BEAM TO THRIE BEAM TRANSITION RAIL
WITH WOOD OR PLASTIC BLOCKOUT AND STEEL POST
POST 8

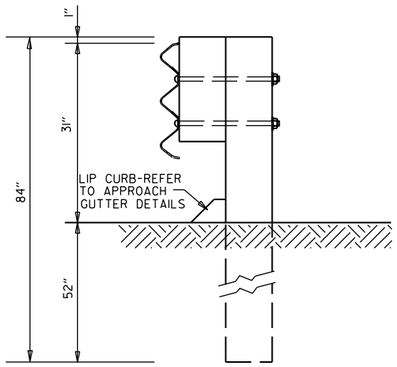

THRIE BEAM RAIL
WITH WOOD OR PLASTIC
BLOCKOUTS & WOOD POSTS
POSTS 1-6

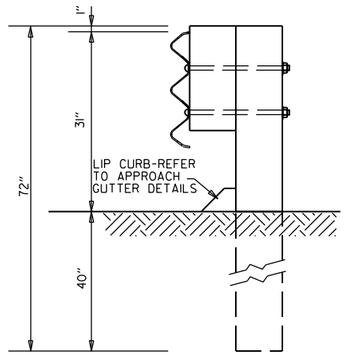

THRIE BEAM RAIL
WITH WOOD OR PLASTIC
BLOCKOUT & WOOD POST
POST 7

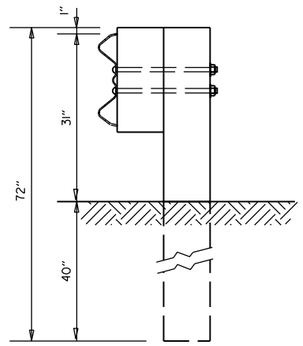

W-BEAM TO THRIE BEAM
TRANSITION RAIL WITH WOOD OR
PLASTIC BLOCKOUT & WOOD POST
POST 8

GENERAL NOTES:

RAIL POSTS SHALL BE SET PERPENDICULAR TO THE ROADWAY PROFILE GRADE AND VERTICALLY IN CROSS SECTION.

WOOD POSTS & WOOD BLOCKS SHALL BE EITHER DENSE NO. 1STRUCTURAL OR BETTER 9.7f (1400 f) OR NO. 1 1350 f SOUTHERN PINE.

DATE	REVISION	FILMED
11-07-19	RENAMED	
11-16-17	REVISED GUARDRAIL HEIGHT, CHANGED STD. DWG. NUMBER FROM GR-10A TO GR-11	
07-14-10	REVISED POST 8 DIMENSIONS	
11-29-07	ADDED PLASTIC BLOCKOUTS	
08-22-02	REVISED LIP CURB NOTE	
03-30-00	DRAWN & ISSUED	

ARKANSAS STATE HIGHWAY COMMISSION

GUARDRAIL DETAILS

STANDARD DRAWING GR-11

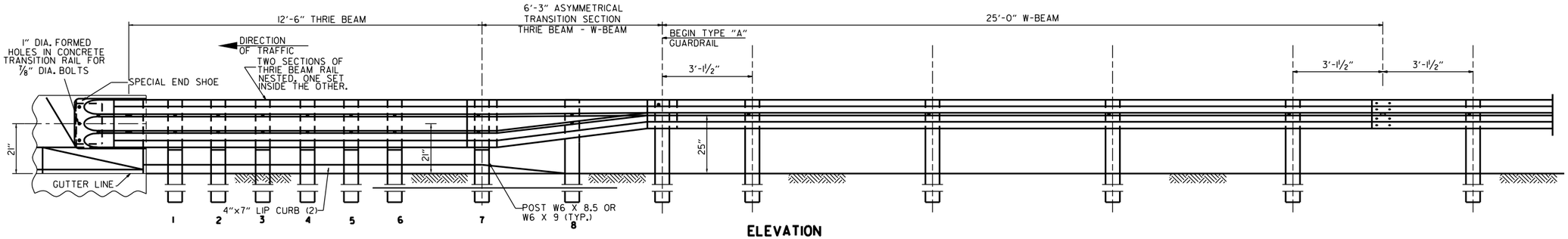

ELEVATION

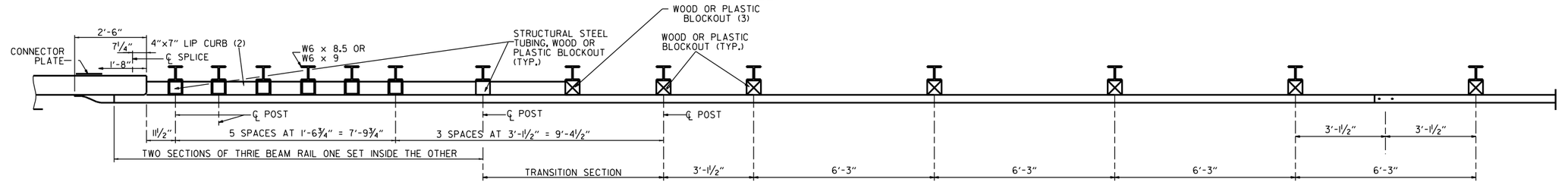

PLAN

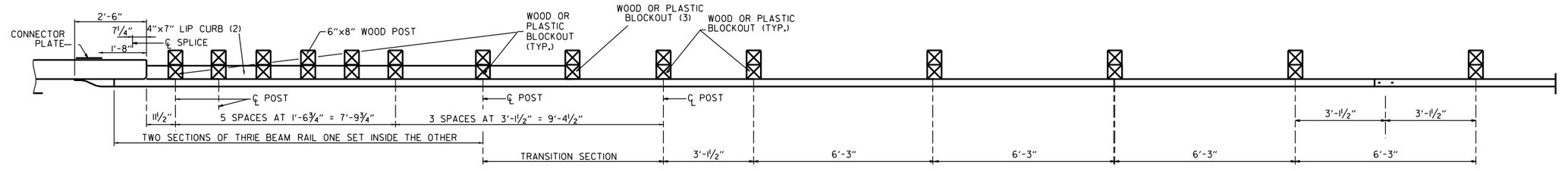

PLAN

(1) VERIFY BOLT SPACING FROM RAIL TRANSITION PRODUCER.
(2) REFER TO APPROACH GUTTER DETAILS.
(3) LENGTH OF BLOCKOUT ON POST 8 TO BE MODIFIED TO FIT RAIL WIDTH.

THRIE BEAM GUARDRAIL CONNECTION AT BRIDGE ENDS

GENERAL NOTES:

THE THRIE BEAM RAIL, SPECIAL END SHOE, AND THE TRANSITION SECTION SHALL BE MADE OF STEEL AND SHALL BE 12 GAGE. ZINC COATING SHALL BE TYPE I.

RAIL POSTS SHALL BE SET PERPENDICULAR TO THE ROADWAY PROFILE GRADE AND VERTICALLY IN CROSS SECTION.

ALL BOLTS SHALL BE SUFFICIENT LENGTH TO EXTEND THROUGH THE FULL THICKNESS OF THE NUT AND NO MORE THAN 3/4" BEYOND IT.

ALL LAP SPLICES, INCLUDING SPECIAL END SHOES, SHALL BE MADE IN THE DIRECTION SHOWN ON STANDARD DRAWINGS GR-8 & GR-13.

REFER TO STD. DRWG. GR-11 FOR POST DETAILS.

USE THRIE BEAM GUARDRAIL COMPONENTS OF SAME MATERIAL FOR ENTIRE JOB.

THRIE BEAM POSTS SHALL BE SAME MATERIAL AS W-BEAM POSTS FOR ENTIRE JOB.

POSTS SHALL NOT BE PLACED AT SPLICE LOCATIONS ALONG W-BEAM RAILS.

WOOD POSTS & WOOD BLOCKS SHALL BE EITHER DENSE NO. 1 STRUCTURAL OR BETTER 9.7f (1400 f) OR NO. 1 1350 f SOUTHERN PINE.

DATE	REVISION	FILMED
05-14-20	REVISED NOTES	
11-07-19	RENAMED & REVISED REFERENCES	
11-16-17	RE-DRAWN FROM STD. DWG. GR-10 & ISSUED	

ARKANSAS STATE HIGHWAY COMMISSION

GUARDRAIL DETAILS

STANDARD DRAWING GR-12

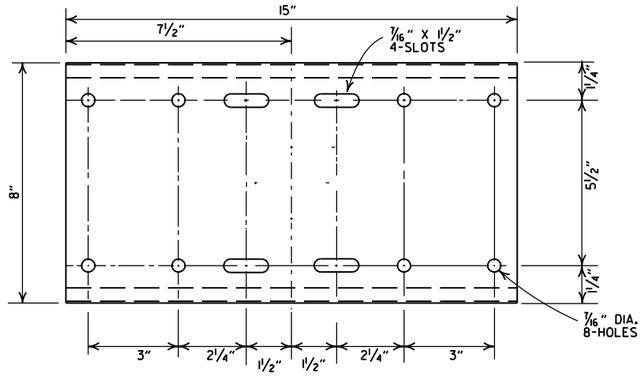

SHELF

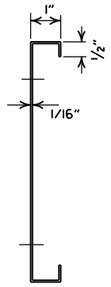

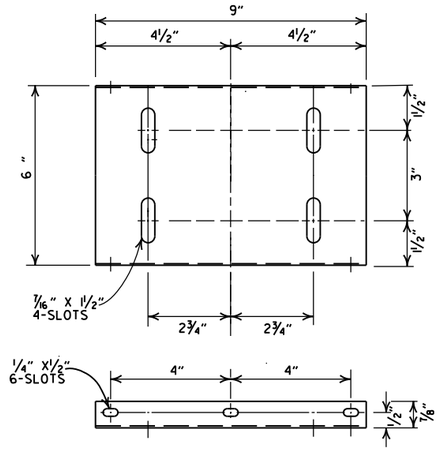

PLATFORM

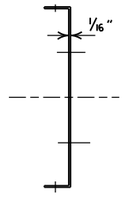

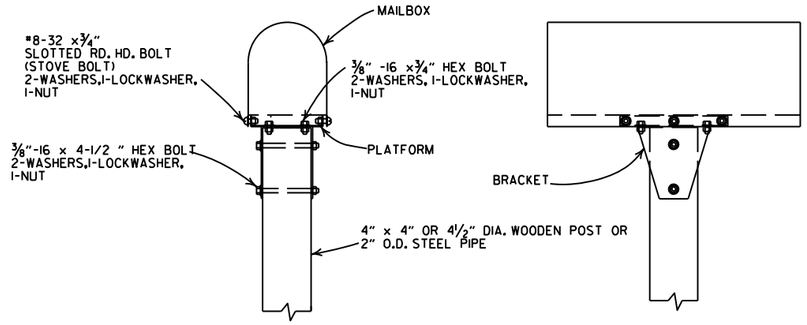

SINGLE INSTALLATION

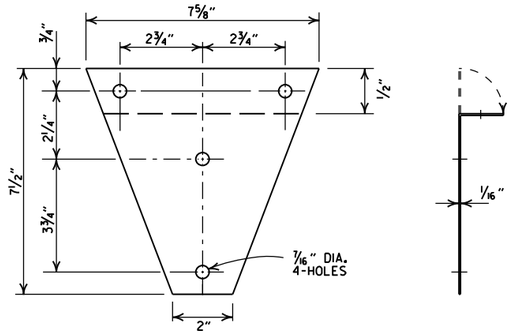

BRACKET

GENERAL NOTES

1. MAILBOX POSTS MAY BE WOOD OR METAL. WOOD POSTS SHALL BE PRESSURE TREATED FOR GROUND CONTACT IN ACCORDANCE WITH SECTION 637.02 OF THE STANDARD SPECIFICATIONS.
2. ANTI-TWIST PLATES SHALL BE USED ONLY ON METAL POSTS.
3. MAILBOX SHELF, BRACKET & PLATFORM SHALL BE GALVANIZED OR PAINTED STEEL, HOWEVER TREATED WOOD MAY BE USED WITH WOODEN POSTS. THE WOODEN SHELF, BRACKET & PLATFORM SHALL BE A MINIMUM OF ¾" THICK AND SHALL BE ASSEMBLED WITH BOLTS OF THE APPROPRIATE LENGTH WITH SIX 8 X ¾" FLATHEAD WOOD SCREWS USED TO ATTACH THE MAILBOX TO THE PLATFORM.
4. THE MAILBOX SHELF AND PLATFORM THAT IS SHOWN IS FOR STANDARD SIZE MAILBOXES. THE SHELF AND PLATFORM SIZE SHALL BE MODIFIED TO FIT MAILBOXES OF A DIFFERENT SIZE.
5. METAL PIPE FOR MAILBOX SUPPORT SHALL BE 2" OUTSIDE DIAMETER STEEL WITH A WALL THICKNESS OF 0.145" AND A WEIGHT OF 2.72 LBS PER FT. OUTSIDE DIAMETER AND WEIGHT SHALL HAVE A TOLERANCE OF +/- 5% ACCORDING TO AASHTO M 181.
6. MAILBOX SUPPORT SYSTEM DIFFERING FROM THOSE SHOWN MAY BE USED, PROVIDED THEY ARE ON THE ARDOT QUALIFIED PRODUCTS LIST FOR MAILBOX SUPPORTS.

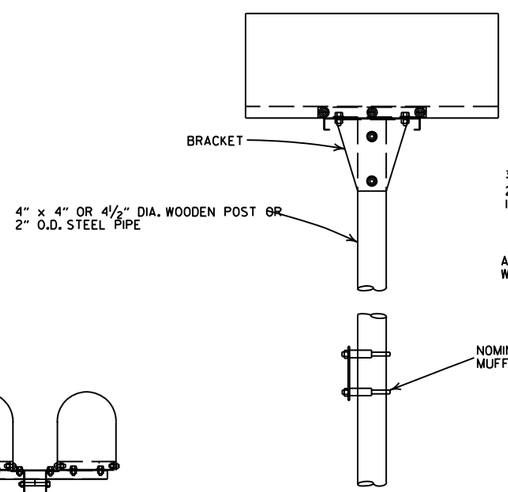

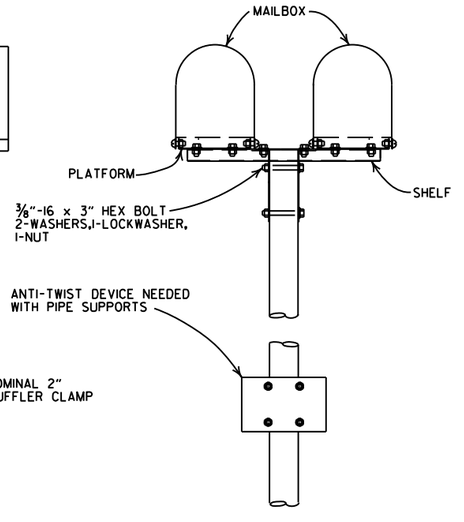

DOUBLE INSTALLATION

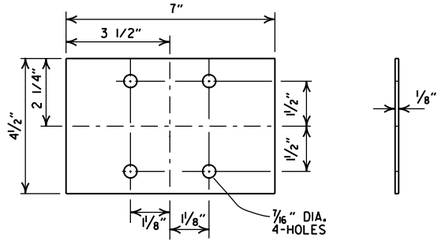

ANTI-TWIST PLATE

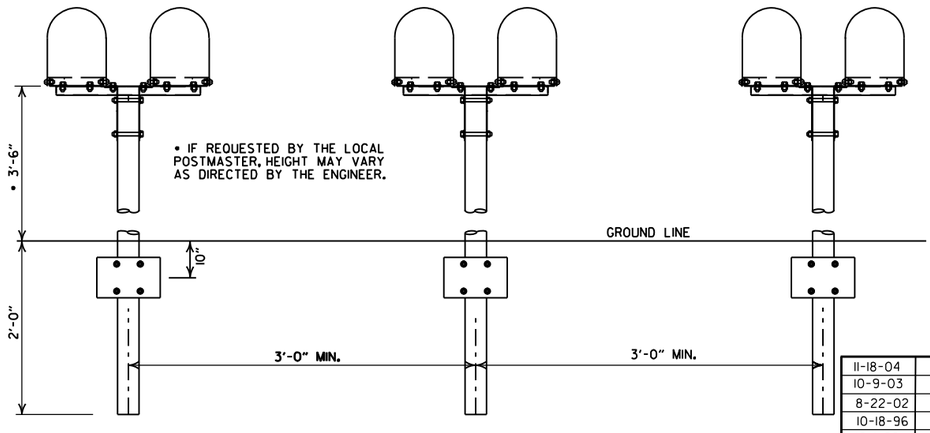

SPACING FOR MULTIPLE POST INSTALLATION

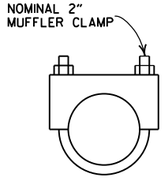

CLAMP

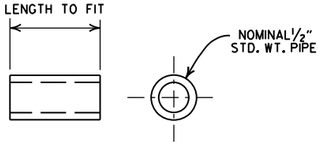

SPACER

DATE	FILMED	REVISION
11-18-04		REVISED NOTES
10-9-03		REVISED NOTE 6
8-22-02		REVISED NOTE 6
10-18-96		CORRECTED AASHTO
10-1-92		CORRECTED SPELLING
9-26-91		NEW PHONE NUMBER
8-15-91		ADDED NOTE
11-30-89		ADJUSTED HEIGHT & ADDED NOTE
2-16-89		DELETED SLOTS FROM SHELF & PLTF
11-17-88	10-1-92	ADJUSTED DIMENSIONS OF STEEL POSTS
7-15-88	20-7-15-88	ISSUED

ARKANSAS STATE HIGHWAY COMMISSION

MAILBOX DETAILS

STANDARD DRAWING MB-1

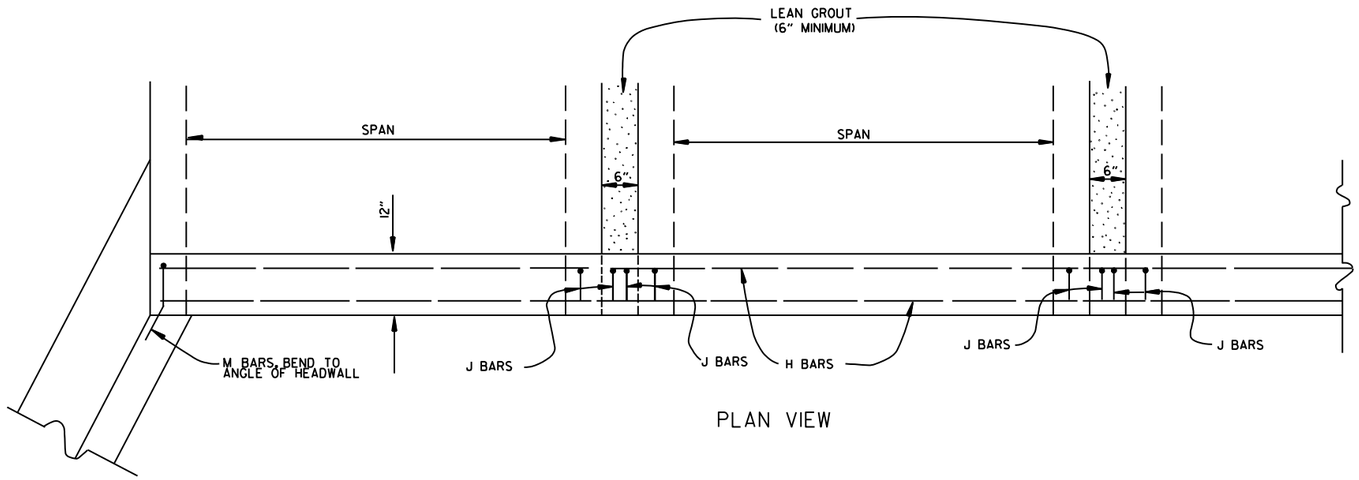

PLAN VIEW

BAR LIST

BAR	NO.	SIZE	LENGTH	BAR BENDING DIAGRAM
H	2	#4	•	
I	•	#4	•	
J	•	#4	1'-5"	
L	•	#4	3'-2"	
M	•	#4	1'-8"	

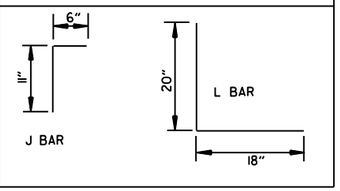

• NOTE: LENGTH AND NUMBER OF BARS VARIES WITH SIZE OF CULVERT

GENERAL NOTES

WINGS, CURTAIN WALLS AND APRONS SHALL BE TIED TO THE PRECAST CULVERT SECTION BY CASTING BARS IN CULVERT END SECTIONS AS SHOWN OR BY DOWELING AND GROUTING. J BARS AND M BARS SHALL BE EMBEDDED A MINIMUM OF 10" IN PRECAST BOX.

WINGS, FOOTINGS, APRONS AND CURTAIN WALLS SHALL BE CONSTRUCTED IN ACCORDANCE WITH THE APPLICABLE WING DRAWING. STEEL AND CONCRETE QUANTITIES WILL BE ADJUSTED TO FIT THE IN-PLACE WIDTH & HEIGHT OF THE PRECAST CONCRETE BOX CULVERTS.

ALL EXPOSED CORNERS TO HAVE ¾" CHAMFERS.

WINGWALLS AND FOOTINGS MAY BE ADJUSTED IN THE FIELD AS DIRECTED BY THE ENGINEER.

ALL CONCRETE, REINFORCING STEEL, LEAN GROUT, MEMBRANE WATERPROOFING, DRAINAGE FILL MATERIAL, GEOTEXTILE FILTER FABRIC, LABOR, MATERIALS AND EQUIPMENT REQUIRED FOR INSTALLING PRECAST BOX CULVERTS WILL NOT BE PAID FOR DIRECTLY BUT WILL BE CONSIDERED TO BE INCLUDED IN THE PRICE BID FOR THE ITEMS AS SPECIFIED IN SECTION 607 OF THE STANDARD SPECIFICATIONS.

LEAN GROUT SHALL CONSIST OF A SAND CEMENT MIXTURE MEETING THE FOLLOWING REQUIREMENTS:
PORTLAND CEMENT SHALL BE TYPE I AND SHALL MEET THE REQUIREMENTS OF AASHTO M 85.
SAND SHALL MEET THE REQUIREMENTS OF FINE AGGREGATE AS SPECIFIED IN SECTION 802.02 OF THE STANDARD SPECIFICATIONS.
THE SAND CEMENT MIXTURE SHALL CONSIST OF NOT LESS THAN 1.5 SACKS OF PORTLAND CEMENT PER TON OF MATERIAL MIXTURE.
THE MIXTURE SHALL CONTAIN SUFFICIENT WATER TO HYDRATE THE CEMENTS. THE SAND CEMENT MIXTURE SHALL BE PLACED IN MAXIMUM 8 INCH THICK LIFTS, LOOSE MEASURE, AND THOROUGHLY RODDED AND TAMPED AROUND BOX TO THOROUGHLY FILL ALL VOIDS.

MEMBRANE WATERPROOFING CONFORMING TO THE REQUIREMENTS OF SECTION 815 OF THE STANDARD SPECIFICATIONS SHALL BE APPLIED TO ALL BOX CULVERT JOINTS.

THE MEMBRANE WATERPROOFING WILL BE REQUIRED ON THE TOP EXTERNAL JOINT AND SHALL EXTEND 1 FOOT DOWN THE SIDES OF THE CULVERT.

IN OUTER BARRELS, ONE WEEP HOLE IS REQUIRED IN EXTERIOR WALLS OF EACH PRECAST CULVERT SECTION. WEEP HOLES SHALL HAVE A MAXIMUM HORIZONTAL SPACING OF 10'-0" IN THE ASSEMBLED CULVERT AND SHALL BE SPACED TO CLEAR ALL REINFORCING STEEL. THE DRAIN OPENING SHALL BE 4" DIAMETER AND SHALL BE PLACED 12" ABOVE THE TOP OF THE BOTTOM SLAB.

DRAINAGE FILL MATERIAL WITH GEOTEXTILE FABRIC IS REQUIRED AT THE EXTERIOR WALLS OF THE ASSEMBLED CULVERT, SEE DETAILS ON THIS DRAWING.

MINIMUM WIDTH SHALL BE 12" (6" ON EACH SIDE OF JOINT). ON MULTIPLE BARREL CULVERTS, MEMBRANE WATERPROOFING SHALL BE APPLIED TO EACH BARREL AS DESCRIBED ABOVE.

WITH THE APPROVAL OF THE ENGINEER, THE CONTRACTOR WILL BE ALLOWED TO SUBSTITUTE, AT NO ADDITIONAL COST TO THE DEPARTMENT, FLOWABLE SELECT MATERIAL CONFORMING TO SECTION 206 OF THE STANDARD SPECIFICATIONS IN LIEU OF LEAN GROUT.

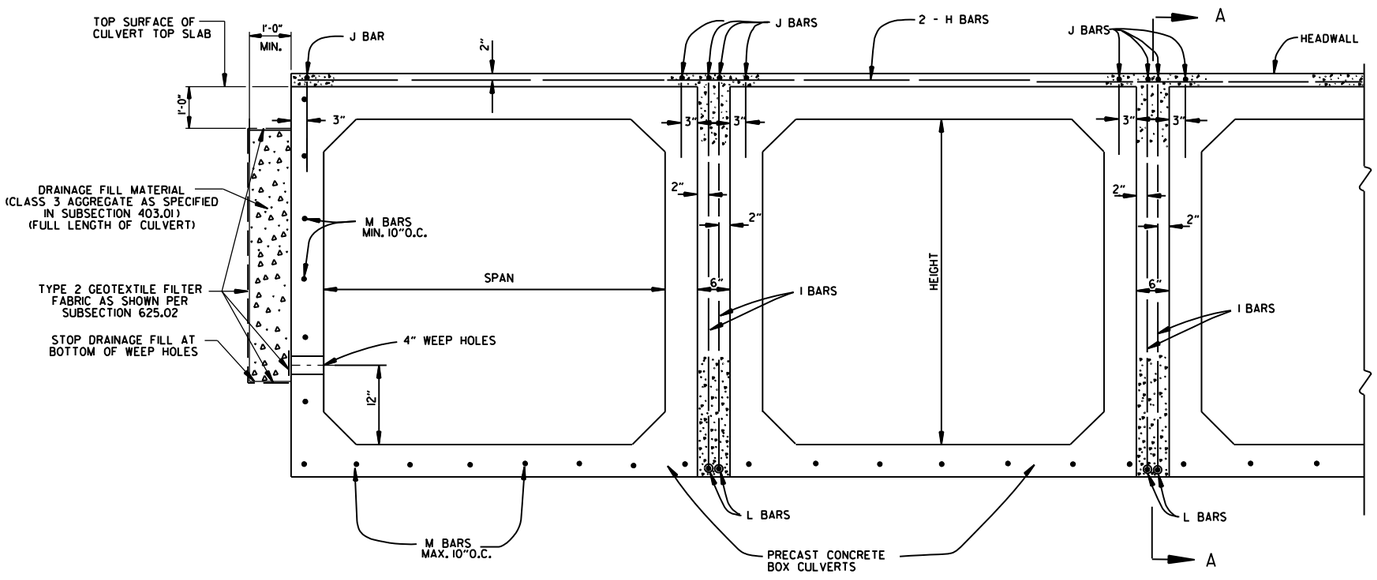

END VIEW

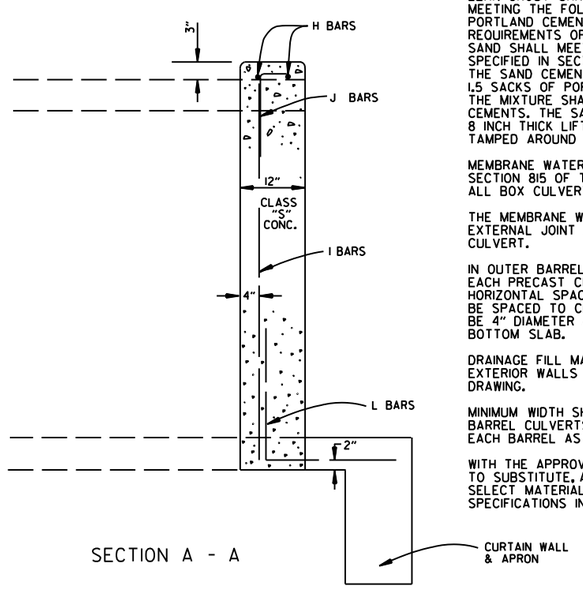

SECTION A - A

DATE	REVISION	DATE FILMED
1-28-15	REVISED GEOTEXTILE FABRIC PLACEMENT	
12-15-11	ADDED NOTE & DTLS FOR WEEP HOLE AND DRAINAGE FILL	
10-15-09	ADDED GENERAL NOTE	
11-10-05	REVISED SPACING OF "M" BARS	
4-10-03	REVISED GENERAL NOTES	
10-18-96	CORRECTED AASHTO REF.	
10-1-92	ADDED NOTE FOR MEMBRANE WATERPROOFING	
8-15-91	ADDED NOTE FOR LEAN GROUT	
11- 8-90	REVISED FOR 1991 SPECS	
11-30-89	ISSUED: JABE	

ARKANSAS STATE HIGHWAY COMMISSION

PRECAST CONCRETE BOX CULVERTS

STANDARD DRAWING PBC-1

REINFORCED CONCRETE ARCH PIPE DIMENSIONS

EQUIV. DIA.	SPAN		RISE	
	AASHTO M 206	ARDOT NOMINAL	AASHTO M 206	ARDOT NOMINAL
INCHES	INCHES			
15	18	18	11	11
18	22	22	13½	14
21	26	26	15½	16
24	28½	29	18	18
30	36¼	36	22½	23
36	43⅜	44	26⅝	27
42	51⅛	51	31⅝	31
48	58½	59	36	36
54	65	65	40	40
60	73	73	45	45
72	88	88	54	54
84	102	102	62	62
90	115	115	72	72
96	122	122	77½	77
108	138	138	87⅛	87
120	154	154	96⅞	97
132	168¾	169	106½	107

THE MEASURED SPAN AND RISE SHALL NOT VARY MORE THAN ± 2 PERCENT FROM THE VALUES SPECIFIED BY AASHTO M206.

REINFORCED CONCRETE HORIZONTAL ELLIPTICAL PIPE DIMENSIONS

EQUIV. DIA.	AASHTO M 207	
	SPAN	RISE
INCHES	INCHES	
18	23	14
24	30	19
27	34	22
30	38	24
33	42	27
36	45	29
39	49	32
42	53	34
48	60	38
54	68	43
60	76	48
66	83	53
72	91	58
78	98	63
84	106	68

THE MEASURED SPAN AND RISE SHALL NOT VARY MORE THAN ± 2 PERCENT FROM THE VALUES SPECIFIED BY AASHTO M207.

CONSTRUCTION SEQUENCE

1. PLACE STRUCTURAL BEDDING MATERIAL TO GRADE. DO NOT COMPACT.
2. INSTALL PIPE TO GRADE.
3. COMPACT STRUCTURAL BEDDING OUTSIDE THE MIDDLE THIRD OF THE PIPE.
4. PLACE AND COMPACT THE HAUNCH AREA UP TO THE MIDDLE OF THE PIPE.
5. COMPLETE BACKFILL ACCORDING TO SUBSECTION 606.03.(f)(1).

NOTE: HAUNCH AND STRUCTURAL BEDDING MATERIAL WILL NOT BE PAID FOR SEPARATELY, BUT COMPENSATION WILL BE CONSIDERED TO BE INCLUDED IN THE PRICE BID PER LINEAR FOOT OF CONCRETE PIPE.

- LEGEND -

D_1 = NORMAL INSIDE DIAMETER OF PIPE
D_o = OUTSIDE DIAMETER OF PIPE
H = FILL COVER HEIGHT OVER PIPE (FEET)
MIN. = MINIMUM
= UNDISTURBED SOIL

INSTALLATION TYPE	MATERIAL REQUIREMENTS FOR HAUNCH AND STRUCTURAL BEDDING
TYPE 1	AGGREGATE BASE COURSE (CLASS 5 OR CLASS 7)
TYPE 2	SELECTED MATERIALS (CLASS SM-1, SM-2, OR SM-4) OR TYPE 1 INSTALLATION MATERIAL*
TYPE 3**	AASHTO CLASSIFICATION A-1 THRU A-6 SOIL OR TYPE 1 OR 2 INSTALLATION MATERIAL

* SM-3 WILL NOT BE ALLOWED.

** MATERIALS SHALL NOT INCLUDE ORGANIC MATERIALS OR STONES LARGER THAN 3 INCHES.

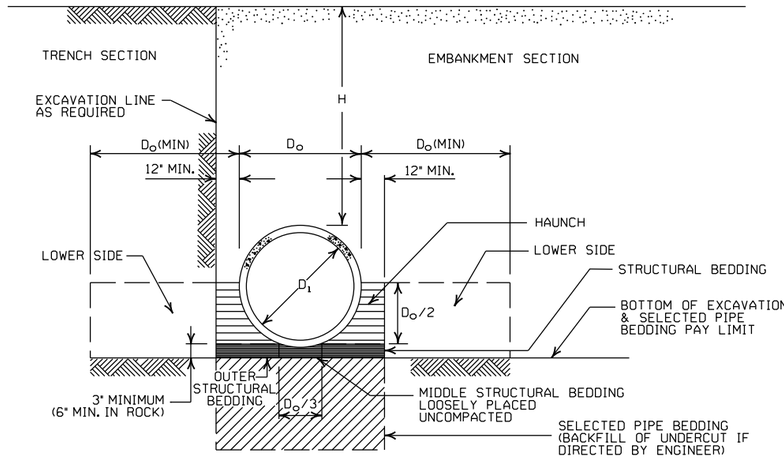

EMBANKMENT AND TRENCH INSTALLATIONS

1. MATERIAL IN THE HAUNCH AND OUTER STRUCTURAL BEDDING SHALL BE COMPACTED TO 95% OF THE MAXIMUM DENSITY ACCORDING TO THE TYPE OR CLASS OF MATERIAL USED.
2. FOR TRENCHES WITH WALLS OF NATURAL SOIL, THE DENSITY OF THE SOIL IN THE LOWER SIDE ZONE SHALL BE AS FIRM AS THE 95% DENSITY REQUIRED FOR THE HAUNCH. IF THE EXISTING SOIL DOES NOT MEET THIS CRITERIA, IT SHALL BE REMOVED AND RECOMPACTED TO 95% OF THE MAXIMUM DENSITY ACCORDING TO THE TYPE OF MATERIAL USED.
3. FOR EMBANKMENTS, THE MATERIAL IN THE LOWER SIDE ZONE SHALL BE COMPACTED TO 95% OF THE MAXIMUM DENSITY ACCORDING TO THE TYPE OR CLASS OF MATERIAL USED.

GENERAL NOTES

1. CONCRETE PIPE CULVERT CONSTRUCTION SHALL CONFORM TO ARKANSAS DEPARTMENT OF TRANSPORTATION STANDARD SPECIFICATIONS FOR HIGHWAY CONSTRUCTION (CURRENT EDITION), WITH APPLICABLE SUPPLEMENTAL SPECIFICATIONS AND SPECIAL PROVISIONS. UNLESS OTHERWISE NOTED IN THE PLANS, SECTION AND SUBSECTION REFER TO THE STANDARD CONSTRUCTION SPECIFICATIONS.
2. CONCRETE PIPE CULVERT DESIGN SHALL CONFORM TO AASHTO LRFD BRIDGE DESIGN SPECIFICATIONS, FIFTH EDITION (2010) WITH 2010 INTERIMS.
3. ALL PIPE SHALL CONFORM TO SECTION 606. CIRCULAR R.C. PIPE CULVERTS SHALL CONFORM TO AASHTO M170. R.C. ARCH PIPE CULVERTS SHALL CONFORM TO AASHTO M206 AND HORIZONTAL ELLIPTICAL PIPE CULVERTS SHALL CONFORM TO AASHTO M207.
4. ALL PIPE SHALL BE PROTECTED DURING CONSTRUCTION BY A COVER SUFFICIENT TO PREVENT DAMAGE FROM PASSAGE OF EQUIPMENT.
5. THE MINIMUM TRENCH WIDTH SHALL BE THE OUTSIDE DIAMETER OF THE PIPE PLUS 24 INCHES. THE MAXIMUM ALLOWABLE TRENCH WIDTH SHALL BE THE MINIMUM WIDTH PRACTICABLE FOR WORKING CONDITIONS.
6. MULTIPLE PIPE CULVERTS SHALL BE INSTALLED WITH A MINIMUM CLEARANCE OF 24 INCHES BETWEEN STRINGS OF PIPE. REFER TO STD. DWG. FES-2 FOR MINIMUM CLEARANCE WHERE FLARED END SECTIONS ARE USED.
7. IMPERVIOUS MATERIAL SHOULD BE PLACED AS DIRECTED BY THE ENGINEER AT THE ENDS OF THE CULVERT TO PREVENT LOSS OF STRUCTURAL BEDDING WHEN PERVIOUS MATERIAL IS USED FOR STRUCTURAL BEDDING AND/OR BACKFILL.
8. NOT MORE THAN ONE LIFTING HOLE MAY BE PROVIDED IN CONCRETE PIPE TO FACILITATE HANDLING. HOLE MAY BE CAST IN PLACE, CUT INTO THE FRESH CONCRETE AFTER FORMS ARE REMOVED, OR DRILLED. THE HOLE SHALL NOT BE MORE THAN TWO INCHES IN DIAMETER OR TWO INCHES SQUARE. CUTTING OR DISPLACEMENT OF REINFORCEMENT WILL NOT BE PERMITTED. SPALLED AREAS AROUND THE HOLE SHALL BE REPAIRED IN A WORKMANLIKE MANNER. LIFTING HOLE SHALL BE FILLED WITH MORTAR, CONCRETE, OR OTHER METHOD AS APPROVED BY THE ENGINEER.
9. WHEN DIRECTED BY THE ENGINEER, UNSUITABLE MATERIAL THAT IS ENCOUNTERED AT THE BOTTOM OF THE EXCAVATED TRENCH (BELOW THE AREA IDENTIFIED AS "STRUCTURAL BEDDING" ABOVE) WILL BE EXCAVATED AND REPLACED WITH SELECTED PIPE BEDDING. THE QUANTITY OF MATERIAL REQUIRED TO BACKFILL THE UNDERCUT AREA UP TO THE SELECTED PIPE BEDDING PAY LIMIT DESIGNATED ABOVE WILL BE MEASURED AND PAID FOR AS "SELECTED PIPE BEDDING."
10. WHEN THE EXISTING MATERIAL EXCAVATED FOR THE PIPE TRENCH IS DETERMINED BY THE ENGINEER TO BE UNSUITABLE FOR BACKFILLING THE PIPE (ABOVE THE AREA IDENTIFIED ABOVE AS THE HAUNCH), BORROW MATERIAL OR MATERIAL FROM THE ROADWAY EXCAVATION WILL BE USED TO BACKFILL THE PIPE. IF SUITABLE MATERIAL IS NOT AVAILABLE, THE ENGINEER MAY AUTHORIZE THE USE OF "SELECTED PIPE BACKFILL."

MINIMUM HEIGHT OF FILL "H" OVER CIRCULAR R.C. PIPE CULVERTS

	CLASS OF PIPE			
	CLASS III		CLASS IV	CLASS V
INSTALLATION TYPE	TYPE 1 OR 2	TYPE 3	ALL	ALL
PIPE ID (IN.)	FEET			
12-15	2	2.5	2	1
18-24	2.5	3	2	1
27-33	3	4	2	1
36-42	3.5	5	2	1
48	4.5	5.5	2	1
54-60	5	7	2	1
66-78	6	8	2	1
84-108	7.5	8	2	1

NOTE: FOR MINIMUM COVER VALUES, "H" SHALL INCLUDE A MINIMUM OF 12" OF PAVEMENT AND/OR BASE.

MAXIMUM HEIGHT OF FILL "H" OVER CIRCULAR R.C. PIPE CULVERTS

INSTALLATION TYPE	CLASS OF PIPE		
	CLASS III	CLASS IV	CLASS V
	FEET		
TYPE 1	21	32	50
TYPE 2	16	25	39
TYPE 3	12	20	30

NOTE: IF FILL HEIGHT EXCEEDS 50 FEET, A SPECIAL DESIGN CONCRETE PIPE WILL BE REQUIRED USING TYPE 1 INSTALLATION.

MINIMUM HEIGHT OF FILL "H" OVER R.C. ARCH & HORIZONTAL ELLIPTICAL PIPE CULVERTS

INSTALLATION TYPE	CLASS OF PIPE	
	CLASS III	CLASS IV
	FEET	
TYPE 2 OR TYPE 3	2.5	1.5

NOTE: TYPE 1 INSTALLATION WILL NOT BE ALLOWED FOR ARCH & HORIZONTAL ELLIPTICAL PIPE CULVERTS.

NOTE: FOR MINIMUM COVER VALUES, "H" SHALL INCLUDE A MINIMUM OF 12" OF PAVEMENT AND/OR BASE.

MAXIMUM HEIGHT OF FILL "H" OVER R.C. ARCH & HORIZONTAL ELLIPTICAL PIPE CULVERTS

INSTALLATION TYPE	CLASS OF PIPE	
	CLASS III	CLASS IV
	FEET	
TYPE 2	13	21
TYPE 3	10	16

NOTE: TYPE 1 INSTALLATION WILL NOT BE ALLOWED FOR ARCH & HORIZONTAL ELLIPTICAL PIPE CULVERTS.

DATE	REVISION	DATE FILMED
2-27-14	REVISED GENERAL NOTE 1.	
12-15-11	REVISED FOR LRFD DESIGN SPECIFICATIONS	
5-18-00	REVISED TYPE 3 BEDDING & ADDED NOTE	
3-30-00	REVISED INSTALLATIONS	
11-06-97	ISSUED	

ARKANSAS STATE HIGHWAY COMMISSION

CONCRETE PIPE CULVERT FILL HEIGHTS & BEDDING

STANDARD DRAWING PCC-1

CORRUGATED STEEL PIPE (ROUND)

PIPE DIAMETER (INCHES)	① MINUMUM COVER TOP OF PIPE TO TOP OF GROUND "H" (FEET)	MAX. FILL HEIGHT "H" ABOVE TOP OF PIPE (FEET)				
		METAL THICKNESS (INCHES)				
		0.064	0.079	0.109	0.138	0.168
2⅔ INCH BY ½ INCH CORRUGATION RIVETED, WELDED, OR HELICAL LOCK-SEAM						
12	1	84	91			
15	1	67	73			
18	1	56	61			
24	1	42	46	59		
30	2	34	36	47		
36	2		30	39	41	
42	2		43	67	70	73
48	2		37	58	61	64
② 3 INCH BY 1 INCH OR 5 INCH BY 1 INCH CORRUGATION RIVETED, WELDED, BOLTED, OR HELICAL LOCK-SEAM						
36	1	48	60	88	111	118
42	1	41	51	72	90	102
48	1	36	45	64	77	85
54	2	32	40	59	71	79
60	2	29	36	53	64	71
66	2	26	33	47	58	64
72	2	24	30	44	53	59
78	2		28	41	49	54
84	2		26	38	45	51
90	2		24	35	43	45
96	2		22	33	40	44
102	2			31	38	42
108	2			30	35	39
114	2			28	34	37
120	2			27	32	35

CORRUGATED ALUMINUM PIPE (ROUND)

PIPE DIAMETER (INCHES)	① MINUMUM COVER TOP OF PIPE TO TOP OF GROUND "H" (FEET)	MAX. FILL HEIGHT "H" ABOVE TOP OF PIPE (FEET)				
		METAL THICKNESS IN INCHES				
		0.060	0.075	0.105	0.135	0.164
		2 ⅔ INCH BY ½ INCH CORRUGATION RIVETED OR HELICAL LOCK-SEAM				
12	1	45	45			
18	2	30	30	52		
24	2	22	22	39	41	
30	2		18	31	32	34
36	2.5		15	26	27	28
42	2			43	43	44
48	2			40	41	43
54	2			35	37	38
60	2				33	34
66	2					31
72	2					29

CORRUGATED METAL PIPE ARCHES

EQUIV. DIA. (INCHES)	PIPE DIMENSION SPAN X RISE (INCHES)	MINUMUM CORNER RADIUS (INCHES)	STEEL			ALUMINUM		
			MIN. THICKNESS REQUIRED INCHES	① MIN. HEIGHT OF FILL, "H" (FT.) INSTALLATION TYPE 1	MAX. HEIGHT OF FILL, "H" (FT.) INSTALLATION TYPE 1	MIN. THICKNESS REQUIRED INCHES	① MIN. HEIGHT OF FILL, "H" (FT.) INSTALLATION TYPE 1	MAX. HEIGHT OF FILL, "H" (FT.) INSTALLATION TYPE 1
			2 ⅔ INCH BY ½ INCH CORRUGATION RIVETED, WELDED, OR HELICAL LOCK-SEAM			2 ⅔ INCH BY ½ INCH CORRUGATION RIVETED OR HELICAL LOCK-SEAM		
15	17x13	3	0.064	2	15	0.060	2	15
18	21x15	3	0.064	2	15	0.060	2	15
21	24x18	3	0.064	2.25	15	0.060	2.25	15
24	28x20	3	0.064	2.5	15	0.075	2.5	15
30	35x24	3	0.079	3	12	0.075	3	12
36	42x29	3½	0.079	3	12	0.105	3	12
42	49x33	4	0.079	3	12	0.105	3	12
48	57x38	5	0.109	3	13	0.135	3	13
54	64x43	6	0.109	3	14	0.135	3	14
60	71x47	7	0.138	3	15	0.164	3	15
66	77x52	8	0.168	3	15			
72	83x57	9	0.168	3	15			
			② 3 INCH BY 1 INCH OR 5 INCH BY 1 INCH CORRUGATION RIVETED, WELDED, OR HELICAL LOCK-SEAM					
				INSTALLATION TYPE 2	INSTALLATION TYPE 1		INSTALLATION TYPE 2	INSTALLATION TYPE 1
36	40x31	5	0.079	3	2		12	15
42	46x36	6	0.079	3	2		13	15
48	53x41	7	0.079	3	2		13	15
54	60x46	8	0.079	3	2		13	15
60	66x51	9	0.079	3	2		13	15
66	73x55	12	0.079	3	2		15	15
72	81x59	14	0.079	3	2		15	15
78	87x63	14	0.079	3	2		15	15
84	95x67	16	0.109	3	2		15	15
90	103x71	16	0.109	3	2		15	15
96	112x75	18	0.109	3	2		15	15
102	117x79	18	0.109	3	2		15	15
108	128x83	18	0.138	3	2		15	15

CONSTRUCTION SEQUENCE

1. PLACE STRUCTURAL BEDDING MATERIAL TO GRADE. DO NOT COMPACT.
2. INSTALL PIPE TO GRADE.
3. COMPACT STRUCTURAL BEDDING OUTSIDE THE MIDDLE THIRD OF THE PIPE.
4. COMPLETE STRUCTURAL BACKFILL OPERATION BY WORKING FROM SIDE TO SIDE OF THE PIPE. THE SIDE TO SIDE STRUCTURAL BACKFILL DIFFERENTIAL SHALL NOT EXCEED 24 INCHES OR 1/3 THE SIZE OF THE PIPE, WHICHEVER IS LESS.

NOTE: STRUCTURAL BACKFILL AND STRUCTURAL BEDDING MATERIAL WILL NOT BE PAID FOR SEPARATELY, BUT COMPENSATION WILL BE CONSIDERED TO BE INCLUDED IN THE PRICE BID PER LINEAR FOOT OF METAL PIPE.

INSTALLATION TYPE	MATERIAL REQUIREMENTS FOR STRUCTURAL BACKFILL AND STRUCTURAL BEDDING
TYPE 1	AGGREGATE BASE COURSE (CLASS 4, 5, 6, OR 7)
TYPE 2	SELECTED MATERIALS (CLASS SM-1, SM-2, OR SM-4) OR TYPE 1 INSTALLATION MATERIAL ③

③ SM-3 WILL NOT BE ALLOWED.

EQUIVALENT METAL THICKNESSES AND GAUGES

METAL THICKNESS IN INCHES			GAUGE NUMBER
STEEL			
ZINC COATED	UNCOATED	ALUMINUM	
0.064	0.0598	0.060	16
0.079	0.0747	0.075	14
0.109	0.1046	0.105	12
0.138	0.1345	0.135	10
0.168	0.1644	0.164	8

- LEGEND -

D_o = OUTSIDE DIAMETER OF PIPE
MAX. = MAXIMUM
MIN. = MINIMUM
= STRUCTURAL BACKFILL MATERIAL
= UNDISTURBED SOIL
EQUIV. DIA. = EQUIVALENT DIAMETER
H = FILL COVER HEIGHT OVER PIPE (FEET)

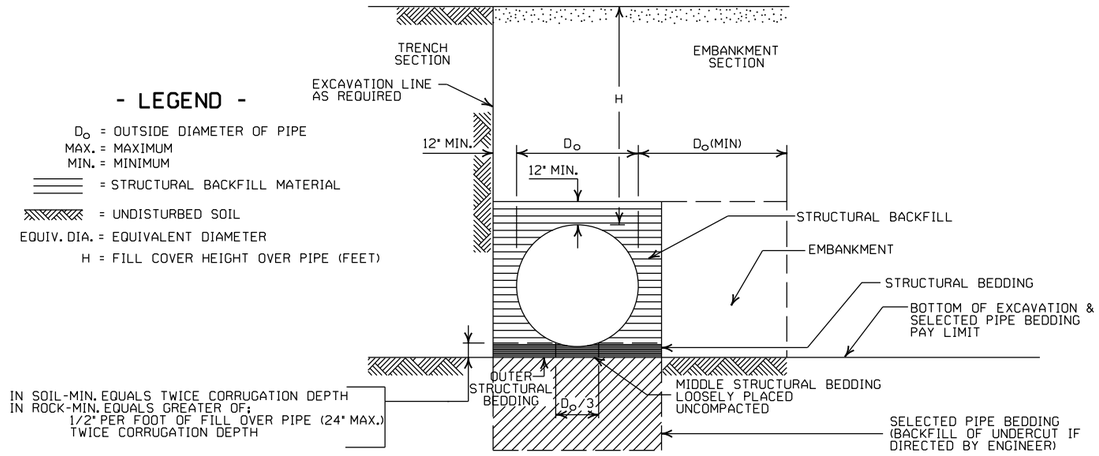

EMBANKMENT AND TRENCH INSTALLATIONS

1. STRUCTURAL BACKFILL, EMBANKMENT, AND OUTER STRUCTURAL BEDDING MATERIAL SHALL BE COMPACTED TO 95% OF THE MAXIMUM DENSITY ACCORDING TO THE TYPE OR CLASS OF MATERIAL USED.
2. INSTALLATION TYPE 1 OR 2 MAY BE USED FOR CORRUGATED STEEL OR ALUMINUM PIPE (ROUND).
3. INSTALALTION TYPE 1 SHALL BE USED FOR CORRUGATED STEEL OR ALUMINUM PIPE ARCHES WITH 2⅔" X ½" CORRUGATION.
4. INSTALLATION TYPE 1 OR 2 MAY BE USED FOR CORRUGATED STEEL OR ALUMINUM PIPE ARCHES WITH 3" X 1" OR 5" X 1" CORRUGATION.

GENERAL NOTES

1. METAL PIPE CULVERT CONSTRUCTION SHALL CONFORM TO ARKANSAS DEPARTMENT OF TRANSPORTATION STANDARD SPECIFICATIONS FOR HIGHWAY CONSTRUCTION (CURRENT EDITION), WITH APPLICABLE SUPPLEMENTAL SPECIFICATIONS AND SPECIAL PROVISIONS. UNLESS OTHERWISE NOTED IN THE PLANS, SECTION AND SUBSECTION REFER TO THE STANDARD CONSTRUCTION SPECIFICATIONS.
2. METAL PIPE CULVERT DESIGN SHALL CONFORM TO AASHTO LRFD BRIDGE DESIGN SPECIFICATIONS, FIFTH EDITION (2010) WITH 2010 INTERIMS.
3. METAL PIPE CULVERT MATERIALS AND INSTALLATIONS SHALL CONFORM TO SECTION 606 AND JOB SPECIAL PROVISION "METAL PIPE".
4. ALL PIPE SHALL BE PROTECTED DURING CONSTRUCTION BY A COVER SUFFICIENT TO PREVENT DAMAGE FROM PASSAGE OF EQUIPMENT.
5. THE MINIMUM TRENCH WIDTH SHALL BE THE OUTSIDE DIAMETER OF THE PIPE PLUS 24 INCHES. THE MAXIMUM ALLOWABLE TRENCH WIDTH SHALL BE THE MINIMUM WIDTH PRACTICABLE FOR WORKING CONDITIONS.
6. MULTIPLE PIPE CULVERTS SHALL BE INSTALLED WITH A MINIMUM CLEARANCE OF 24 INCHES BETWEEN STRINGS OF PIPE. REFER TO STD. DWG. FES-2 FOR MINIMUM CLEARANCE WHERE FLARED END SECTIONS ARE USED.
7. IMPERVIOUS MATERIAL SHOULD BE PLACED AS DIRECTED BY THE ENGINEER AT THE ENDS OF THE CULVERT TO PREVENT LOSS OF STRUCTURAL BEDDING WHEN PERVIOUS MATERIAL IS USED FOR STRUCTURAL BEDDING AND/OR BACKFILL.
8. WHEN DIRECTED BY THE ENGINEER, UNSUITABLE MATERIAL THAT IS ENCOUNTERED AT THE BOTTOM OF THE EXCAVATED TRENCH (BELOW THE AREA IDENTIFIED AS "STRUCTURAL BEDDING" ABOVE) WILL BE EXCAVATED AND REPLACED WITH SELECTED PIPE BEDDING. THE QUANTITY OF MATERIAL REQUIRED TO BACKFILL THE UNDERCUT AREA UP TO THE SELECTED PIPE BEDDING PAY LIMIT DESIGNATED ABOVE WILL BE MEASURED AND PAID FOR AS "SELECTED PIPE BEDDING."
9. WHEN THE EXISTING MATERIAL EXCAVATED FOR THE PIPE TRENCH IS DETERMINED BY THE ENGINEER TO BE UNSUITABLE FOR BACKFILLING THE PIPE (ABOVE THE AREA IDENTIFIED AS STRUCTURAL BACKFILL), BORROW MATERIAL OR MATERIAL FROM THE ROADWAY EXCAVATION WILL BE USED TO BACKFILL THE PIPE. IF SUITABLE MATERIAL IS NOT AVAILABLE, THE ENGINEER MAY AUTHORIZE THE USE OF "SELECTED PIPE BACKFILL."

① FOR MINIMUM COVER VALUES, "H" SHALL INCLUDE A MINIMUM 12" OF PAVEMENT AND/OR BASE.

② WHERE THE STANDARD 2 2/3"x ½" CORRUGATION AND GAUGE IS SPECIFIED FOR A GIVEN DIAMETER, A PIPE OF THE SAME DIAMETER WITH A 3" x 1" OR 5" x 1" CORRUGATION MAY BE SUBSTITUTED, PROVIDING IT IS GAUGED FOR A FILL HEIGHT CONDITION EQUAL TO OR GREATER THAN THE MAXIMUM FILL HEIGHT CONDITION FOR THE SPECIFIED GAUGE AND CORRUGATION.

DATE	REVISION	DATE FILMED
2-27-14	REVISED GENERAL NOTE 1.	
12-15-11	REVISED FOR LRFD DESIGN SPECS	
3-30-00	REVISED INSTALLATIONS	
11-06-97	ISSUED	

ARKANSAS STATE HIGHWAY COMMISSION

METAL PIPE CULVERT FILL HEIGHTS & BEDDING

STANDARD DRAWING PCM-1

INSTALLATION TYPE	•• MATERIAL REQUIREMENTS FOR STRUCTURAL BACKFILL AND STRUCTURAL BEDDING
TYPE 2	•SELECTED MATERIALS (CLASS SM-1, SM-2 OR SM-4)

• AGGREGATE BASE COURSE (CLASS 4, 5, 6, OR 7) MAY BE USED IN LIEU OF SELECTED MATERIAL.

SM3 WILL NOT BE ALLOWED.

•• STRUCTURAL BEDDING MATERIAL SHALL HAVE A MAXIMUM PARTICLE SIZE OF 1 INCH. STRUCTURAL BACKFILL MATERIAL SHALL BE FREE OF ORGANIC MATERIAL, STONES LARGER THAN 1.50 INCH IN GREATEST DIMENSION, OR FROZEN LUMPS.

STRUCTURAL BACKFILL AND STRUCTURAL BEDDING MATERIAL WILL NOT BE PAID FOR SEPARATELY, BUT COMPENSATION WILL BE CONSIDERED TO BE INCLUDED IN THE PRICE BID PER LINEAR FOOT OF HDPE PIPE.

MULTIPLE INSTALLATION OF HIGH DENSITY POLYETHYLENE PIPES

PIPE DIAMETER	CLEAR DISTANCE BETWEEN PIPES
18"	1'-6"
24"	2'-0"
30"	2'-6"
36"	3'-0"
42"	3'-6"
48"	4'-0"

MINIMUM TRENCH WIDTH BASED ON FILL HEIGHT "H"

PIPE DIAMETER	TRENCH WIDTH (FEET) "H" < 10'-0"	TRENCH WIDTH (FEET) "H" >OR= 10'-0"
18"	4'-6"	4'-6"
24"	5'-0"	6'-0"
30"	5'-6"	7'-6"
36"	6'-0"	9'-0"
42"	7'-0"	10'-6"
48"	8'-0"	12'-0"

①NOTE:
18" MIN. (18" - 30" DIAMETERS)
24" MIN. (36" - 48" DIAMETERS)

MINIMUM COVER VALUES, "H" SHALL INCLUDE A MINIMUM 12" OF PAVEMENT AND/OR BASE.

MINIMUM COVER FOR CONSTRUCTION LOADS

PIPE DIAMETER	② MIN. COVER (FEET) FOR INDICATED CONSTRUCTION LOADS 18.0-50.0 (KIPS)	50.0-75.0 (KIPS)	75.0-110.0 (KIPS)	110.0-175.0 (KIPS)
36" OR LESS	2'-0"	2'-6"	3'-0"	3'-0"
42" OR GREATER	3'-0"	3'-0"	3'-6"	4'-0"

②MINIMUM COVER SHALL BE MEASURED FROM TOP OF PIPE TO TOP OF THE MAINTAINED CONSTRUCTION ROADWAY SURFACE. THE SURFACE SHALL BE MAINTAINED.

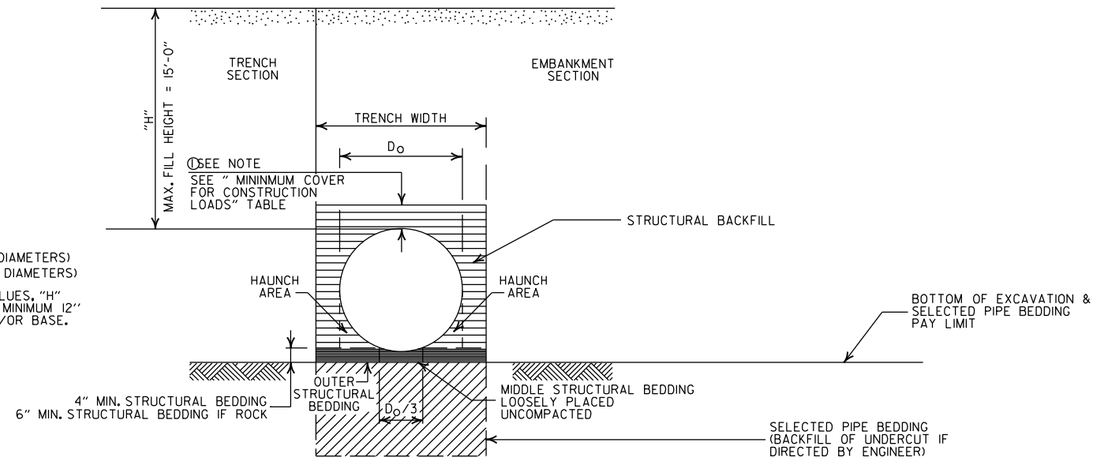

TYPE 2 EMBANKMENT AND TRENCH INSTALLATIONS

1. STRUCTURAL BACKFILL, EMBANKMENT, AND OUTER STRUCTURAL BEDDING MATERIAL SHALL BE COMPACTED TO 95% OF THE MAXIMUM DENSITY ACCORDING TO THE TYPE OR CLASS OF MATERIAL USED.

CONSTRUCTION SEQUENCE

1. PLACE STRUCTURAL BEDDING MATERIAL TO GRADE. DO NOT COMPACT.
2. INSTALL PIPE TO GRADE.
3. COMPACT STRUCTURAL BEDDING OUTSIDE THE MIDDLE THIRD OF THE PIPE.
4. THE STRUCTURAL BACKFILL SHALL BE PLACED AND COMPACTED IN LAYERS NOT EXCEEDING 8". THE LAYERS SHALL BE BROUGHT UP EVENLY AND SIMULTANEOUSLY TO THE ELEVATION OF THE MINIMUM COVER.
5. PIPE INSTALLATION MAY REQUIRE THE USE OF RESTRAINTS, WEIGHTING OR OTHER APPROVED METHODS IN ORDER TO HELP MAINTAIN GRADE AND ALIGNMENT.

GENERAL NOTES

1. PIPE SHALL CONFORM TO AASHTO M294, TYPE S. INSTALLATION SHALL CONFORM TO JOB SPECIAL PROVISION "PLASTIC PIPE" AND SECTION 606 OF THE STANDARD SPECIFICIATIONS FOR HIGHWAY CONSTRUCTION (CURRENT EDITION).
2. PLASTIC PIPE CULVERT DESIGN SHALL CONFORM TO AASHTO LRFD BRIDGE DESIGN SPECIFICATIONS, FIFTH EDITION (2010) WITH 2010 INTERIMS.
3. THE MAXIMUM ALLOWABLE TRENCH WIDTH SHALL BE THE MINIMUM WIDTH PLUS A SUFFICIENT WIDTH TO ENSURE WORKING ROOM TO PROPERLY AND SAFELY PLACE AND COMPACT HAUNCHING AND OTHER BACKFILL MATERIAL.
4. IMPERVIOUS MATERIAL SHOULD BE PLACED AS DIRECTED BY THE ENGINEER AT THE ENDS OF THE CULVERT TO PREVENT LOSS OF STRUCTURAL BEDDING WHEN PERVIOUS MATERIAL IS USED FOR STRUCTURAL BEDDING AND/OR BACKFILL.
5. WHEN DIRECTED BY THE ENGINEER, UNSUITABLE MATERIAL THAT IS ENCOUNTERED AT THE BOTTOM OF THE EXCAVATED TRENCH (BELOW THE AREA IDENTIFIED AS "STRUCTURAL BEDDING" ABOVE) WILL BE EXCAVATED AND REPLACED WITH SELECTED PIPE BEDDING. THE QUANTITY OF MATERIAL REQUIRED TO BACKFILL THE UNDERCUT AREA UP TO THE SELECTED PIPE BEDDING PAY LIMIT DESIGNATED ABOVE WILL BE MEASURED AND PAID FOR AS "SELECTED PIPE BEDDING."
6. WHEN THE EXISTING MATERIAL EXCAVATED FOR THE PIPE TRENCH IS DETERMINED BY THE ENGINEER TO BE UNSUITABLE FOR BACKFILLING THE PIPE (ABOVE THE AREA IDENTIFIED ABOVE AS STRUCTURAL BACKFILL), BORROW MATERIAL OR MATERIAL FROM THE ROADWAY EXCAVATION WILL BE USED TO BACKFILL THE PIPE. IF SUITABLE MATERIAL IS NOT AVAILABLE, THE ENGINEER MAY AUTHORIZE THE USE OF "SELECTED PIPE BACKFILL."
7. FOR PIPE TYPES THAT ARE NOT SMOOTH ON THE OUTSIDE (CORRUGATED OR PROFILE WALLS), BACKFILL GRADATIONS SHOULD BE SELECTED THAT WILL PERMIT THE FILLING OF THE CORRUGATION OR PROFILE VALLEY.
8. HIGH DENSITY POLYETHYLENE PIPES OF DIAMETERS OTHER THAN SHOWN WILL NOT BE ALLOWED.
9. JOINTS FOR HDPE PIPE SHALL MEET THE REQUIREMENTS FOR SOIL TIGHTNESS AS SPECIFIED IN AASHTO SECTION 26.4.2.4 AND 30.4.2 "AASHTO LRFD BRIDGE CONSTRUCTION SPECIFICATIONS." JOINTS SHALL BE INSTALLED PER MANUFACTURER'S RECOMMENDATIONS.

- LEGEND -

H = FILL HEIGHT (FT.)
Ø = OUTSIDE DIAMETER OF PIPE
MAX. = MAXIMUM
MIN. = MINIMUM

= STRUCTURAL BACKFILL MATERIAL

= UNDISTURBED SOIL

DATE	REVISION	DATE FILMED
2-27-14	REVISED GENERAL NOTE 1.	
12-15-11	REVISED GENERAL NOTES & MINIMUM COVER NOTE	
11-17-10	ISSUED	

ARKANSAS STATE HIGHWAY COMMISSION

PLASTIC PIPE CULVERT (HIGH DENSITY POLYETHYLENE)

STANDARD DRAWING PCP-1

INSTALLATION TYPE	•• MATERIAL REQUIREMENTS FOR STRUCTURAL BACKFILL AND STRUCTURAL BEDDING
TYPE 2	•SELECTED MATERIALS (CLASS SM-1, SM-2, OR SM-4)

• AGGREGATE BASE COURSE (CLASS 4, 5, 6, OR 7) MAY BE USED IN LIEU OF SELECTED MATERIAL.

SM3 WILL NOT BE ALLOWED.

•• STRUCTURAL BEDDING MATERIAL SHALL HAVE A MAXIMUM PARTICLE SIZE OF 1INCH. STRUCTURAL BACKFILL MATERIAL SHALL BE FREE OF ORGANIC MATERIAL, STONES LARGER THAN 1.50 INCH IN GREATEST DIMENSION, OR FROZEN LUMPS.

STRUCTURAL BACKFILL AND STRUCTURAL BEDDING MATERIAL WILL NOT BE PAID FOR SEPARATELY, BUT COMPENSATION WILL BE CONSIDERED TO BE INCLUDED IN THE PRICE BID PER LINEAR FOOT OF PVC PIPE.

MINIMUM TRENCH WIDTH BASED ON FILL HEIGHT "H"

PIPE DIAMETER	TRENCH WIDTH (FEET)	
	"H" < 10'-0"	"H" >OR= 10'-0"
18"	4'-6"	4'-6"
24"	5'-0"	6'-0"
30"	5'-6"	7'-6"
36"	6'-0"	9'-0"

MULTIPLE INSTALLATION OF PVC PIPES

PIPE DIAMETER	CLEAR DISTANCE BETWEEN PIPES
18"	1'-6"
24"	2'-0"
30"	2'-6"
36"	3'-0"

MAXIMUM FILL HEIGHT BASED ON STRUCTURAL BACKFILL

PIPE DIAMETER	"H"
18"	45'-0"
24"	45'-0"
30"	40'-0"
36"	40'-0"

① NOTE:
12" MIN. (18" - 36" DIAMETERS)
MINIMUM COVER VALUE, "H" SHALL INCLUDE A MINIMUM 12" OF PAVEMENT AND/OR BASE.

MINIMUM COVER FOR CONSTRUCTION LOADS

PIPE DIAMETER	② MIN. COVER (FEET) FOR INDICATED CONSTRUCTION LOADS			
	18.0-50.0 (KIPS)	50.0-75.0 (KIPS)	75.0-110.0 (KIPS)	110.0-175.0 (KIPS)
18" THRU 36"	2'-0"	2'-6"	3'-0"	3'-0"

②MINIMUM COVER SHALL BE MEASURED FROM TOP OF PIPE TO TOP OF THE MAINTAINED CONSTRUCTION ROADWAY SURFACE. THE SURFACE SHALL BE MAINTAINED.

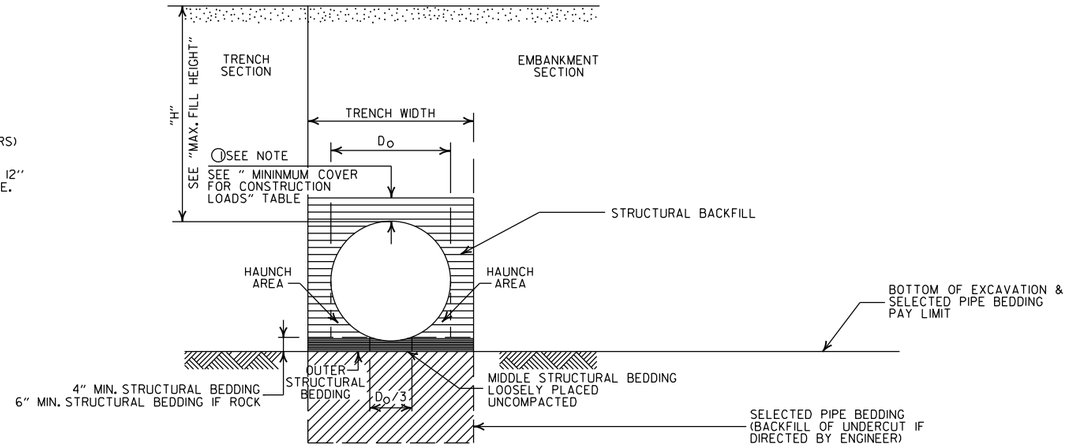

TYPE 2 EMBANKMENT AND TRENCH INSTALLATIONS

1. STRUCTURAL BACKFILL, EMBANKMENT, AND OUTER STRUCTURAL BEDDING MATERIAL SHALL BE COMPACTED TO 95% OF THE MAXIMUM DENSITY ACCORDING TO THE TYPE OR CLASS OF MATERIAL USED.

CONSTRUCTION SEQUENCE

1. PLACE STRUCTURAL BEDDING MATERIAL TO GRADE. DO NOT COMPACT.
2. INSTALL PIPE TO GRADE.
3. COMPACT STRUCTURAL BEDDING OUTSIDE THE MIDDLE THIRD OF THE PIPE.
4. THE STRUCTURAL BACKFILL SHALL BE PLACED AND COMPACTED IN LAYERS NOT EXCEEDING 8". THE LAYERS SHALL BE BROUGHT UP EVENLY AND SIMULTANEOUSLY TO THE ELEVATION OF THE MINIMUM COVER.
5. PIPE INSTALLATION MAY REQUIRE THE USE OF RESTRAINTS, WEIGHTING OR OTHER APPROVED METHODS IN ORDER TO HELP MAINTAIN GRADE AND ALIGNMENT.

GENERAL NOTES

1. PIPE SHALL CONFORM TO ASTM F949, CELL CLASS 12454. INSTALLATION SHALL CONFORM TO JOB SPECIAL PROVISION "PLASTIC PIPE" AND SECTION 606 OF THE STANDARD SPECIFICATIONS FOR HIGHWAY CONSTRUCTION (CURRENT EDITION).
2. PLASTIC PIPE CULVERT DESIGN SHALL CONFORM TO AASHTO LRFD BRIDGE DESIGN SPECIFICATIONS, FIFTH EDITION (2010) WITH 2010 INTERIMS.
3. THE MAXIMUM ALLOWABLE TRENCH WIDTH SHALL BE THE MINIMUM WIDTH PLUS A SUFFICIENT WIDTH TO ENSURE WORKING ROOM TO PROPERLY AND SAFELY PLACE AND COMPACT HAUNCHING AND OTHER BACKFILL MATERIAL.
4. IMPERVIOUS MATERIAL SHOULD BE PLACED AS DIRECTED BY THE ENGINEER AT THE ENDS OF THE CULVERT TO PREVENT LOSS OF STRUCTURAL BEDDING WHEN PERVIOUS MATERIAL IS USED FOR STRUCTURAL BEDDING AND/OR BACKFILL.
5. WHEN DIRECTED BY THE ENGINEER, UNSUITABLE MATERIAL THAT IS ENCOUNTERED AT THE BOTTOM OF THE EXCAVATED TRENCH (BELOW THE AREA IDENTIFIED AS "STRUCTURAL BEDDING" ABOVE) WILL BE EXCAVATED AND REPLACED WITH SELECTED PIPE BEDDING. THE QUANTITY OF MATERIAL REQUIRED TO BACKFILL THE UNDERCUT AREA UP TO THE SELECTED PIPE BEDDING PAY LIMIT DESIGNATED ABOVE WILL BE MEASURED AND PAID FOR AS "SELECTED PIPE BEDDING."
6. WHEN THE EXISTING MATERIAL EXCAVATED FOR THE PIPE TRENCH IS DETERMINED BY THE ENGINEER TO BE UNSUITABLE FOR BACKFILLING THE PIPE (ABOVE THE AREA IDENTIFIED ABOVE AS STRUCTURAL BACKFILL), BORROW MATERIAL OR MATERIAL FROM THE ROADWAY EXCAVATION WILL BE USED TO BACKFILL THE PIPE. IF SUITABLE MATERIAL IS NOT AVAILABLE, THE ENGINEER MAY AUTHORIZE THE USE OF "SELECTED PIPE BACKFILL."
7. FOR PIPE TYPES THAT ARE NOT SMOOTH ON THE OUTSIDE (CORRUGATED OR PROFILE WALLS), BACKFILL GRADATIONS SHOULD BE SELECTED THAT WILL PERMIT THE FILLING OF THE CORRUGATION OR PROFILE VALLEY.
8. PVC PIPES OF DIAMETERS OTHER THAN SHOWN WILL NOT BE ALLOWED.
9. JOINTS FOR PVC PIPE SHALL MEET THE REQUIREMENTS FOR SOIL TIGHTNESS AS SPECIFIED IN AASHTO SECTION 26.4.2.4 AND 30.4.2 "AASHTO LRFD BRIDGE CONSTRUCTION SPECIFICATIONS." JOINTS SHALL BE INSTALLED PER MANUFACTURER'S RECOMMENDATIONS.

- LEGEND -

H = FILL HEIGHT (FT.)
D_O = OUTSIDE DIAMETER OF PIPE
MAX. = MAXIMUM
MIN. = MINIMUM

= STRUCTURAL BACKFILL MATERIAL

= UNDISTURBED SOIL

DATE	REVISION	DATE FILMED
2-27-14	REVISED GENERAL NOTE 1.	
12-15-11	REV GENERAL NOTES & MINIMUM COVER NOTE; DELETED SM3 MATERIAL	
11-17-10	ISSUED	

ARKANSAS STATE HIGHWAY COMMISSION

PLASTIC PIPE CULVERT (PVC F949)

STANDARD DRAWING PCP-2

INSTALLATION TYPE	**MATERIAL REQUIREMENTS FOR STRUCTURAL BACKFILL AND STRUCTURAL BEDDING
TYPE 1	AGGREGATE BASE COURSE (CLASS 4, 5, 6, OR 7)
TYPE 2	*SELECTED MATERIALS (CLASS SM-1, SM-2 OR SM-4) OR TYPE I INSTALLATION MATERIAL

*SM3 WILL NOT BE ALLOWED.

** STRUCTURAL BEDDING MATERIAL SHALL HAVE A MAXIMUM PARTICLE SIZE OF 1INCH. STRUCTURAL BACKFILL MATERIAL SHALL BE FREE OF ORGANIC MATERIAL, STONES LARGER THAN 1.50 INCH IN GREATEST DIMENSION, OR FROZEN LUMPS.

STRUCTURAL BACKFILL AND STRUCTURAL BEDDING MATERIAL WILL NOT BE PAID FOR SEPARATELY, BUT COMPENSATION WILL BE CONSIDERED TO BE INCLUDED IN THE PRICE BID PER LINEAR FOOT OF POLYPROPYLENE PIPE.

MULTIPLE INSTALLATION OF POLYPROPYLENE PIPES

PIPE DIAMETER	CLEAR DISTANCE BETWEEN PIPES
18"	1'-6"
24"	2'-0"
30"	2'-6"
36"	3'-0"
42"	3'-6"
48"	4'-0"
60"	5'-0"

MINIMUM TRENCH WIDTH BASED ON FILL HEIGHT "H"

PIPE DIAMETER	TRENCH WIDTH (FEET) "H" < 10'-0"	TRENCH WIDTH (FEET) "H" >OR= 10'-0"
18"	4'-6"	4'-6"
24"	5'-0"	6'-0"
30"	5'-6"	7'-6"
36"	6'-0"	9'-0"
42"	7'-0"	10'-6"
48"	8'-0"	12'-0"
60"	10'-0"	15'-0"

①NOTE:
12" MIN. (18" - 42" DIAMETERS)
24" MIN. (60" DIAMETER)

MINIMUM COVER VALUES, "H" SHALL INCLUDE A MINIMUM 12" OF PAVEMENT AND/OR BASE.

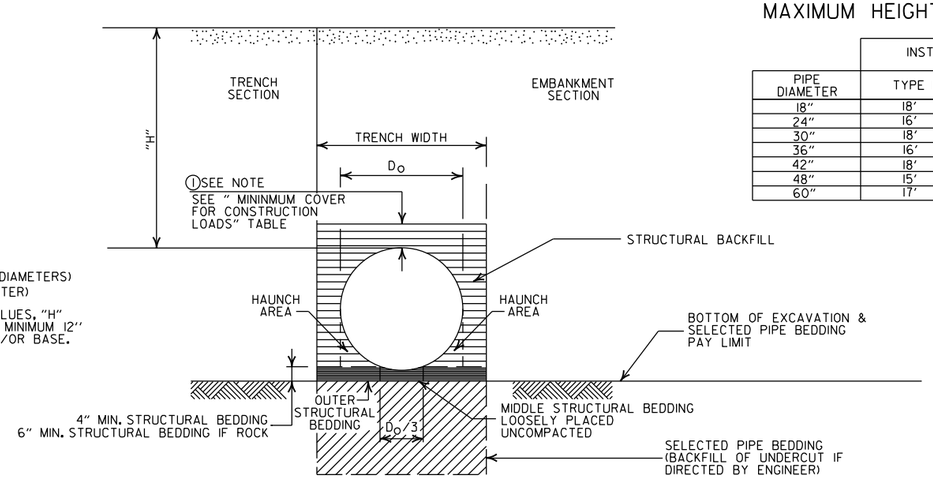

MAXIMUM HEIGHT OF FILL "H"

PIPE DIAMETER	INSTALLATION TYPE TYPE 1	INSTALLATION TYPE TYPE 2
18"	18'	14'
24"	16'	12'
30"	18'	14'
36"	16'	12'
42"	18'	13'
48"	15'	11'
60"	17'	12'

MINIMUM COVER FOR CONSTRUCTION LOADS

PIPE DIAMETER	② MIN. COVER (FEET) FOR INDICATED CONSTRUCTION LOADS 18.0-50.0 (KIPS)	50.0-75.0 (KIPS)	75.0-110.0 (KIPS)	110.0-150.0 (KIPS)
36" OR LESS	2'-0"	2'-6"	3'-0"	3'-0"
42" OR GREATER	3'-0"	3'-0"	3'-6"	4'-0"

②MINIMUM COVER SHALL BE MEASURED FROM TOP OF PIPE TO TOP OF THE MAINTAINED CONSTRUCTION ROADWAY SURFACE. THE SURFACE SHALL BE MAINTAINED.

EMBANKMENT AND TRENCH INSTALLATIONS

1. STRUCTURAL BACKFILL, EMBANKMENT, AND OUTER STRUCTURAL BEDDING MATERIAL SHALL BE COMPACTED TO 95% OF THE MAXIMUM DENSITY ACCORDING TO THE TYPE OR CLASS OF MATERIAL USED.

CONSTRUCTION SEQUENCE

1. PLACE STRUCTURAL BEDDING MATERIAL TO GRADE. DO NOT COMPACT.
2. INSTALL PIPE TO GRADE.
3. COMPACT STRUCTURAL BEDDING OUTSIDE THE MIDDLE THIRD OF THE PIPE.
4. THE STRUCTURAL BACKFILL SHALL BE PLACED AND COMPACTED IN LAYERS NOT EXCEEDING 8". THE LAYERS SHALL BE BROUGHT UP EVENLY AND SIMULTANEOUSLY TO THE ELEVATION OF THE MINIMUM COVER.
5. PIPE INSTALLATION MAY REQUIRE THE USE OF RESTRAINTS, WEIGHTING OR OTHER APPROVED METHODS IN ORDER TO HELP MAINTAIN GRADE AND ALIGNMENT.

GENERAL NOTES

1. PIPE SHALL CONFORM TO AASHTO M330, TYPE S, INSTALLATION SHALL CONFORM TO JOB SPECIAL PROVISION "PLASTIC PIPE" AND SECTION 606 OF THE STANDARD SPECIFICIATIONS FOR HIGHWAY CONSTRUCTION (CURRENT EDITION).
2. PLASTIC PIPE CULVERT DESIGN SHALL CONFORM TO AASHTO LRFD BRIDGE DESIGN SPECIFICATIONS, SIXTH EDITION (2012) WITH 2013 INTERIMS.
3. THE MAXIMUM ALLOWABLE TRENCH WIDTH SHALL BE THE MINIMUM WIDTH PLUS A SUFFICIENT WIDTH TO ENSURE WORKING ROOM TO PROPERLY AND SAFELY PLACE AND COMPACT HAUNCHING AND OTHER BACKFILL MATERIAL.
4. IMPERVIOUS MATERIAL SHOULD BE PLACED AS DIRECTED BY THE ENGINEER AT THE ENDS OF THE CULVERT TO PREVENT LOSS OF STRUCTURAL BEDDING WHEN PERVIOUS MATERIAL IS USED FOR STRUCTURAL BEDDING AND/OR BACKFILL.
5. WHEN DIRECTED BY THE ENGINEER, UNSUITABLE MATERIAL THAT IS ENCOUNTERED AT THE BOTTOM OF THE EXCAVATED TRENCH (BELOW THE AREA IDENTIFIED AS "STRUCTURAL BEDDING" ABOVE) WILL BE EXCAVATED AND REPLACED WITH SELECTED PIPE BEDDING. THE QUANTITY OF MATERIAL REQUIRED TO BACKFILL THE UNDERCUT AREA UP TO THE SELECTED PIPE BEDDING PAY LIMIT DESIGNATED ABOVE WILL BE MEASURED AND PAID FOR AS "SELECTED PIPE BEDDING."
6. WHEN THE EXISTING MATERIAL EXCAVATED FOR THE PIPE TRENCH IS DETERMINED BY THE ENGINEER TO BE UNSUITABLE FOR BACKFILLING THE PIPE (ABOVE THE AREA IDENTIFIED ABOVE AS STRUCTURAL BACKFILL), BORROW MATERIAL OR MATERIAL FROM THE ROADWAY EXCAVATION WILL BE USED TO BACKFILL THE PIPE. IF SUITABLE MATERIAL IS NOT AVAILABLE, THE ENGINEER MAY AUTHORIZE THE USE OF "SELECTED PIPE BACKFILL."
7. FOR PIPE TYPES THAT ARE NOT SMOOTH ON THE OUTSIDE (CORRUGATED OR PROFILE WALLS), BACKFILL GRADATIONS SHOULD BE SELECTED THAT WILL PERMIT THE FILLING OF THE CORRUGATION OR PROFILE VALLEY.
8. POLYPROPYLENE PIPES OF DIAMETERS OTHER THAN SHOWN WILL NOT BE ALLOWED.
9. JOINTS FOR POLYPROPYLENE PIPE SHALL MEET THE REQUIREMENTS FOR SOIL TIGHTNESS AS SPECIFIED IN SECTION 26.4.2.4 AND 30.4.2 OF THE AASHTO LRFD BRIDGE CONSTRUCTION SPECIFICATIONS 3RD EDITION (2010) WITH 2012 INTERIMS. JOINTS SHALL BE INSTALLED PER MANUFACTURER'S RECOMMENDATIONS.

- LEGEND -

H = FILL HEIGHT (FT.)
D_o = OUTSIDE DIAMETER OF PIPE
MAX. = MAXIMUM
MIN. = MINIMUM

= STRUCTURAL BACKFILL MATERIAL

= UNDISTURBED SOIL

DATE	REVISION	DATE FILMED
02-27-20	REVISED	
11-07-19	ISSUED	

ARKANSAS STATE HIGHWAY COMMISSION

PLASTIC PIPE CULVERT (POLYPROPYLENE)

STANDARD DRAWING PCP-3

NOTES:
1. REFER TO THE STRIPING DETAILS FOR PAVEMENT MARKING LINE WIDTHS.
2. THIS DRAWING SHALL BE USED IN CONJUNCTION WITH THE LATEST REVISED ADDITION OF THE "MANUAL ON UNIFORM TRAFFIC CONTROL DEVICES."
3. RAISED PAVEMENT MARKERS SHALL BE PLACED ON AN 80 FEET SPACING UNLESS OTHERWISE SHOWN IN THE PLANS.

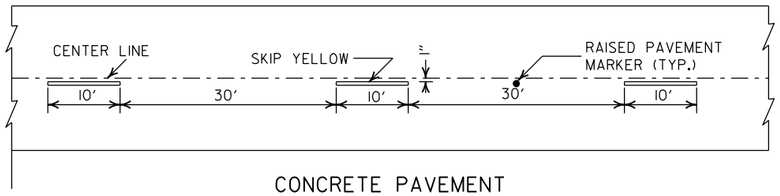

CONCRETE PAVEMENT

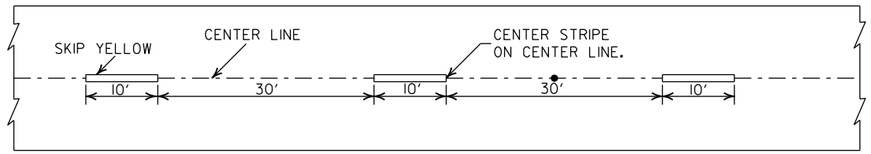

ASPHALT PAVEMENT

BROKEN LINE STRIPING

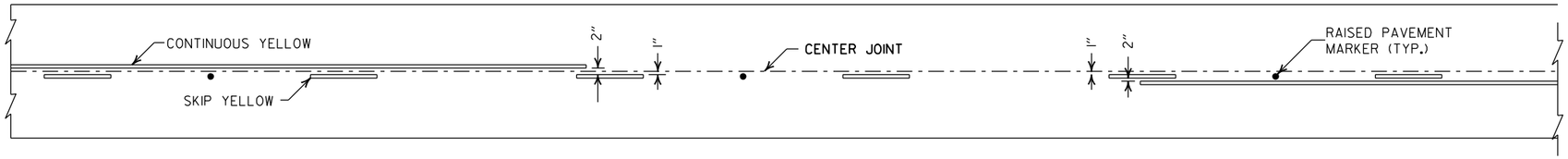

SOLID LINE STRIPING ON CONCRETE PAVEMENT

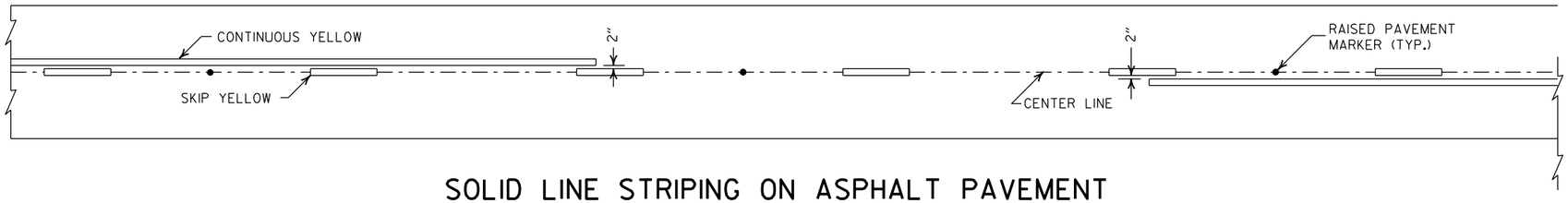

SOLID LINE STRIPING ON ASPHALT PAVEMENT

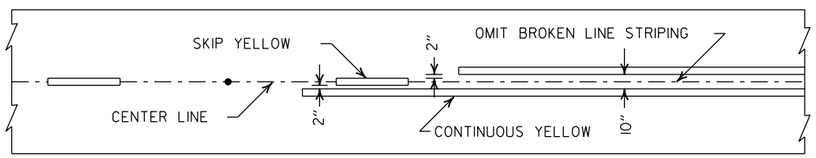

ASPHALT PAVEMENT

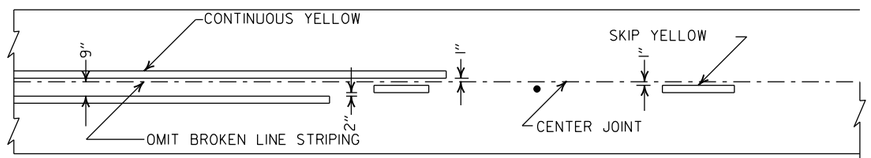

CONCRETE PAVEMENT

STRIPING AT ADJACENT NO PASSING LANES

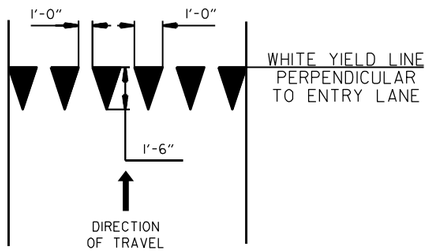

YIELD LINE DETAIL

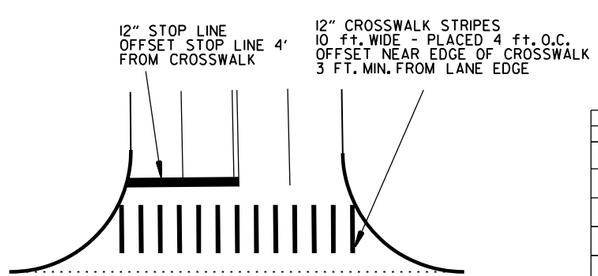

CROSSWALK AND STOP LINE DETAILS

2" FOR ASPHALT OR CONCRETE PAVEMENT
6" FOR BITUMINOUS SURFACE TREATMENT

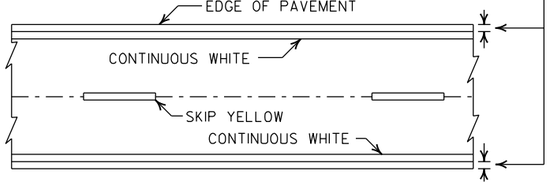

PAVEMENT EDGE LINE MARKING

NOTE:
THE RED LENS OF THE TYPE II R.P.M. SHALL FACE THE INCORRECT TRAFFIC MOVEMENT.

TYPE II
RED/CLEAR OR
YELLOW/YELLOW

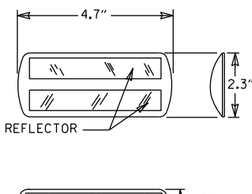

NOTE:
DIMENSIONS SHOWN FOR RAISED PAVEMENT MARKERS ARE TYPICAL. THE CONTRACTOR MAY SUBSTITUTE SIMILAR MARKERS WITH THE APPROVAL OF THE ENGINEER. REQUESTING APPROVAL FOR SIMILAR MARKERS MAY BE MADE BY REFERRING TO THE ARDOT QUALIFIED PRODUCTS LIST.

DETAIL OF STANDARD RAISED PAVEMENT MARKERS

DATE	REVISION	FILMED
2-27-20	REVISED STOP LINE DETAILS	
6-1-17	ADDED YIELD LINE DETAIL	
5-12-16	REVISED LINE WIDTHS, SPACING, & NOTES	
9-12-13	REVISED DETAIL OF STANDARD RAISED PAVEMENT MARKERS	
11-17-10	REVISED GENERAL NOTES & REMOVED PLOWABLE PVMT MRKRS	
11-18-04	REVISED NOTE 2 & GENERAL NOTES	
8-22-02	ADDED CROSSWALK & STOPBAR DTLS.	
7-02-98	ADDED DETAILS OF STD. RAISED PAV'T. MARKERS	
4-26-96	REV. NOTES 3&4; ADDED R.P.M.	
9-30-80	DRAWN	1-9-30-80

ARKANSAS STATE HIGHWAY COMMISSION

PAVEMENT MARKING DETAILS

STANDARD DRAWING PM-1

NOTE:

1. UNLESS OTHERWISE SPECIFIED ON THE PLANS, THE UNDERDRAIN COVER SHALL BE THOROUGHLY COMPACTED EARTH AND SHALL BE SUBSIDIARY TO PIPE UNDERDRAIN.

2. GRANULAR MATERIAL SHALL BE WRAPPED WITH GEOTEXTILE FABRIC. LAP FABRIC 12" OR THE WIDTH OF THE TRENCH AT THE TOP.

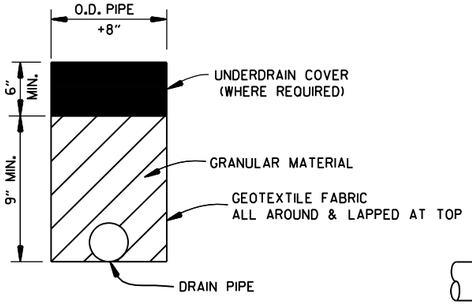

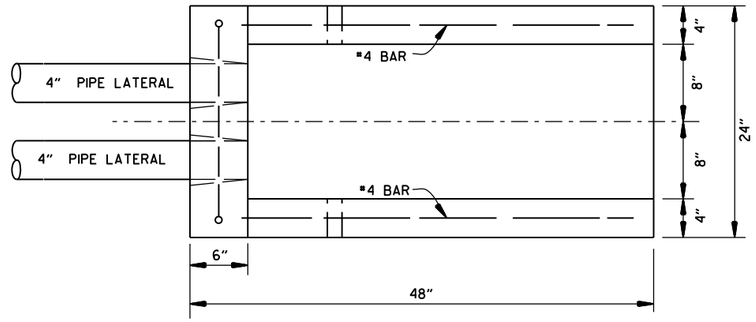

PLAN VIEW

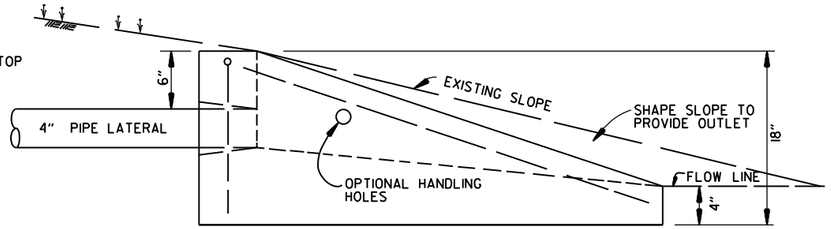

SIDE VIEW

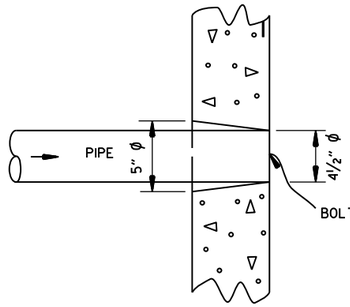

DETAIL OF HOLE FOR 4" PIPE

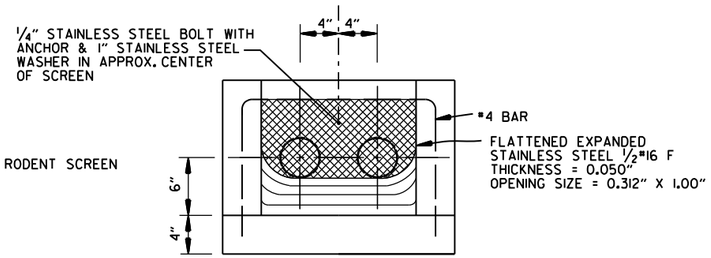

FRONT VIEW
(DETAIL OF RODENT SCREEN)

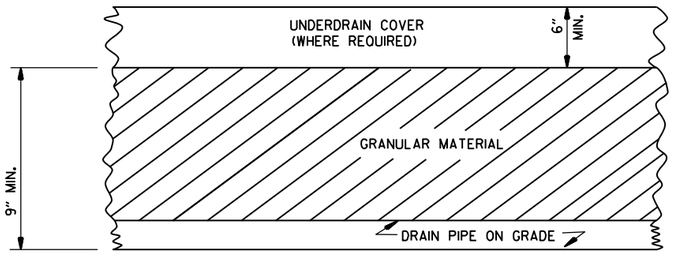

DETAILS OF PIPE UNDERDRAIN

UNDERDRAIN OUTLET PROTECTORS

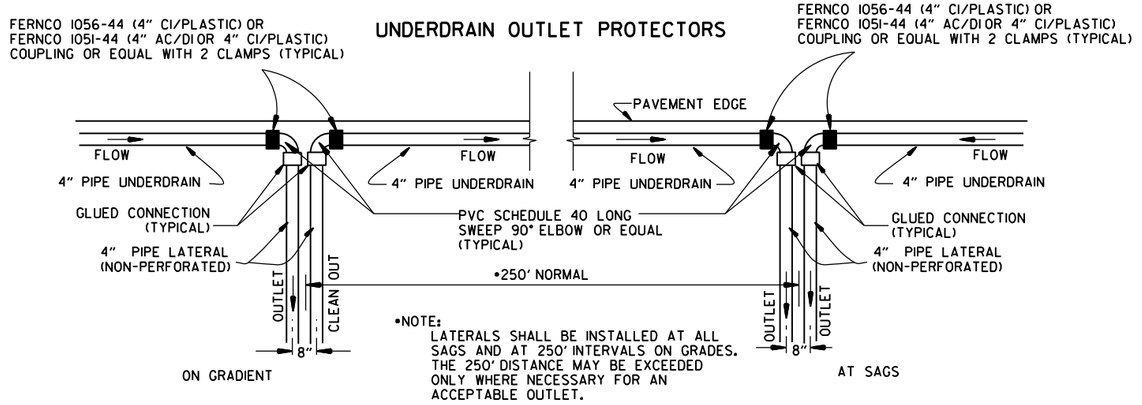

•NOTE: LATERALS SHALL BE INSTALLED AT ALL SAGS AND AT 250' INTERVALS ON GRADES. THE 250' DISTANCE MAY BE EXCEEDED ONLY WHERE NECESSARY FOR AN ACCEPTABLE OUTLET.

DETAIL OF PIPE UNDERDRAIN LATERALS WHEN PLACED ALONG PAVEMENT EDGE

NOTE: PVC PIPE FOR LATERALS SHALL MEET THE REQUIREMENTS OF ASTM D 1785 (LATEST REVISION) FOR SCHEDULE 40 PIPE.

NOTES FOR PIPE UNDERDRAINS

1. GEOTEXTILE FABRIC SHALL MEET THE REQUIREMENTS OF SECTION 625 FOR TYPE 1. PAYMENT FOR GEOTEXTILE FABRIC AND GRANULAR FILTER MATERIAL SHALL BE INCLUDED IN THE PRICE BID PER LIN. FT. FOR "4" PIPE UNDERDRAINS" IN ACCORDANCE WITH SECTION 611 OF THE STANDARD SPECIFICATIONS.

2. 4" NON-PERFORATED SCHEDULE 40 PVC PIPE LATERALS WITH OUTLET PROTECTORS SHALL BE INSTALLED AS SHOWN HEREON. LATERALS WILL BE MEASURED AND PAID FOR AS "4" PIPE UNDERDRAINS." UNDERDRAIN OUTLET PROTECTORS WILL BE MEASURED AND PAID FOR BY THE UNIT IN ACCORDANCE WITH SECTION 611 OF THE STANDARD SPECIFICATIONS.

3. EXISTING 4" PIPE UNDERDRAINS MAY BE CONNECTED TO PROPOSED DROP INLETS OR EXTENDED WHERE DIRECTED BY THE ENGINEER. PAYMENT FOR CONNECTING TO DROP INLETS SHALL BE CONSIDERED INCLUDED IN THE PRICE BID FOR "4" PIPE UNDERDRAINS."

4. THE LOCATION OF ALL LATERALS SHALL BE MARKED WITH 4" X 12" PERMANENT PAVEMENT MARKING TAPE (TYPE III WHITE) AT THE OUTSIDE EDGE OF THE SHOULDER, PLACED TRANSVERSE TO TRAFFIC. PAYMENT FOR THIS WORK SHALL BE INCLUDED IN THE PRICE BID FOR THE VARIOUS CONTRACT ITEMS.

5. PAYMENT FOR THE RODENT SCREEN SHALL BE INCLUDED IN THE PRICE BID PER EACH FOR "UNDERDRAIN OUTLET PROTECTORS."

6. ANY EXISTING UNDERDRAINS THAT INTERFERE WITH INSTALLATION OF THE NEW UNDERDRAIN SYSTEM SHALL BE REMOVED AND DISPOSED OF AS DIRECTED BY THE ENGINEER. PAYMENT WILL BE CONSIDERED INCLUDED IN THE PRICE BID FOR THE VARIOUS CONTRACT ITEMS. EXISTING UNDERDRAIN OUTLET PROTECTORS SHALL BE REMOVED UNDER THE ITEM "REMOVAL AND DISPOSAL OF UNDERDRAIN OUTLET PROTECTORS."

7. AT LOCATIONS WHERE A SINGLE LATERAL IS USED THE CONTRACTOR SHALL HAVE THE FOLLOWING OPTIONS: 1. INSTALL OUTLET PROTECTOR AS SHOWN ON STANDARD DRAWING PU-1 AND GROUT THE UNUSED HOLE OR 2. INSTALL AN OUTLET PROTECTOR WITH A SINGLE HOLE.

DATE	REVISION	DATE FILMED
12-8-16	ADDED NOTES FOR PIPE UNDERDRAINS, REVISED RODENT SCREEN DETAIL AND NOTES, REMOVED NOTE 1 FOR GRANULAR MATERIAL, ADDED NOTE FOR GEOTEXTILE FABRIC	
4-10-03	REVISED NOTE 3	
1-12-00	REVISED DETAIL OF UNDERDRAIN LATERALS	
11-18-98	REVISED NOTE	
10-18-96	REVISED MIN. DEPTH & GEOTEXTILE FABRIC	
4-26-96	ADDED LATERAL NOTE; 5½" TO 5"	
11-22-95	REVISED LATERALS	
7-20-95	REVISED LATERALS & ADDED NOTE	
11- 3-94	REVISED FOR DUAL LATERALS	11- 3-94
10- 1-92	SUBSTITUTED GEOTEXTILE	10- 1-92
8-15-91	ADDED POLYEDTHYLENE PIPE	8-15-91
11- 8-90	DELETED ALTERNATE NOTE	11- 8-90
1-25-90	ADDED 4" SNAP ADAPTER	1-25-90
11-30-89	DEL. (SUBGRADE); ADDED (WHERE REQUIRED)	11-30-89
7-15-88	ISSUED P.L.M.	647-7-15-88

ARKANSAS STATE HIGHWAY COMMISSION

DETAILS OF PIPE UNDERDRAIN

STANDARD DRAWING PU-1

STEEL FABRICATION: REINFORCING STEEL FABRICATION SHALL CONFORM TO THE DIMENSIONS LISTED IN THE TABLE BELOW:

BAR SIZE	PIN DIAMETER	HOOK EXTENSION "K"
3	2¼"	4"
4	3 "	4½"
5	3¾"	5"
6	4½"	6"
7	5¼"	7"
8	6"	8"

IF THE OVERALL HEIGHT OF THE HOOK (SEE DIAGRAM BELOW) FOR A "b", "b1", "b2" or "b3" BENT BAR IS GREATER THAN THE CORRESPONDING TOP OR BOTTOM SLAB THICKNESS, LESS 2¾ INCHES, EACH BENT BAR SHALL BE REPLACED WITH ONE HOOKED BAR AND ONE STRAIGHT BAR, USING LENGTHS AS SHOWN IN THE TABLE BELOW. THE TWO BARS SHALL BE THE SAME DIAMETER AS, AND PLACED AT THE SAME SPACING AS, THE "b", "b1", "b2" OR "b3" BENT BARS THEY REPLACE.

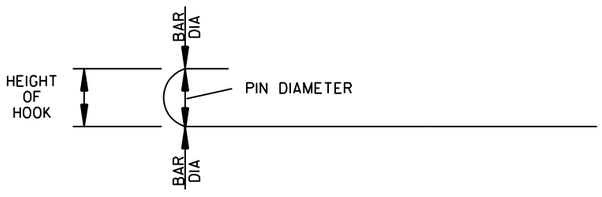

NOTE: DIMENSIONS OF BARS ARE MEASURED OUT TO OUT OF BARS.

OVERALL HEIGHT OF HOOKED BAR DIAGRAM

THE HOOKED BARS SHALL BE PLACED IN THE BOTTOM OF THE TOP SLAB AND THE TOP OF THE BOTTOM SLAB. THE STRAIGHT BARS SHALL BE PLACED IN THE TOP OF THE TOP SLAB AND THE BOTTOM OF THE BOTTOM SLAB. SEE TABLE BELOW FOR LENGTHS OF REPLACEMENT HOOKED AND STRAIGHT BARS.

FOR SKEWED CULVERTS, THE REPLACEMENT STRAIGHT BAR MAY HAVE TO BE CUT IN FIELD TO FIT.

REPLACEMENT BAR LENGTHS TABLE

BAR SIZE: "b", "b1", "b2" OR "b3"	LENGTH OF HOOKED BAR	LENGTH OF STRAIGHT BAR
#4	L + 1' - 0"	SEE "c" BAR LENGTH
#5	L + 1' - 2"	SEE "c" BAR LENGTH
#6	L + 1' - 4"	SEE "c" BAR LENGTH
#7	L + 1' - 8"	SEE "c" BAR LENGTH
#8	L + 1' - 10"	SEE "c" BAR LENGTH
#9	L + 2' - 6"	SEE "c" BAR LENGTH

L = "OW" - 3 INCHES

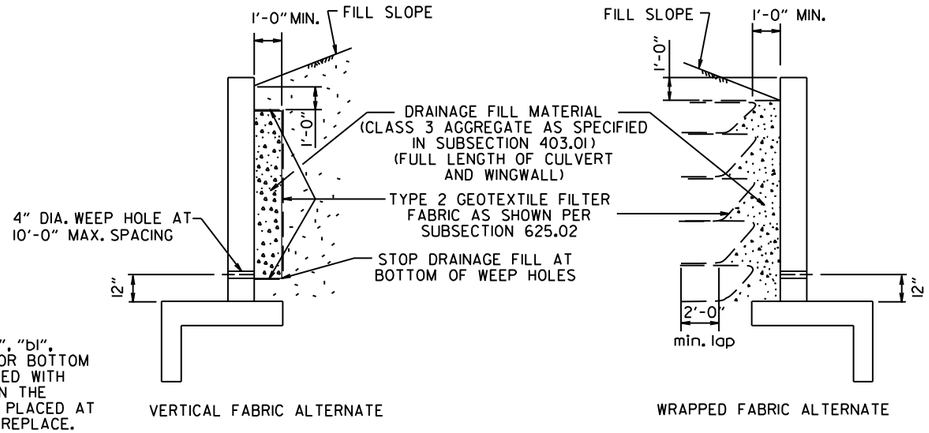

WINGWALL & CULVERT DRAINAGE DETAIL

REINFORCED CONCRETE BOX CULVERT GENERAL NOTES

CONCRETE SHALL BE CLASS S WITH A MINIMUM 28 DAY COMPRESSIVE STRENGTH OF 3500 PSI.

REINFORCING STEEL SHALL BE AASHTO M 31 OR M 53, GRADE 60.

CONSTRUCTION AND MATERIALS FOR WINGWALL & CULVERT DRAINAGE, INCLUDING WEEP HOLES AND GRANULAR MATERIAL, SHALL BE SUBSIDIARY TO THE BID ITEM, "CLASS S CONCRETE".

MEMBRANE WATERPROOFING SHALL CONFORM TO THE REQUIREMENTS OF SECTION 815 OF THE STANDARD SPECIFICATIONS.

MEMBRANE WATERPROOFING SHALL BE APPLIED TO ALL CONSTRUCTION JOINTS IN THE TOP SLAB AND THE SIDEWALLS OF R.C. BOX CULVERTS AS DIRECTED BY THE ENGINEER. NO PAYMENT SHALL BE MADE FOR THIS ITEM, BUT PAYMENT WILL BE CONSIDERED TO BE INCLUDED IN THE VARIOUS ITEMS BID FOR THE R.C. BOX CULVERT.

REINFORCING STEEL TOLERANCES: THE TOLERANCES FOR REINFORCING STEEL SHALL MEET THOSE LISTED IN "MANUAL OF STANDARD PRACTICE" PUBLISHED BY CONCRETE REINFORCING STEEL INSTITUTE (CRSI) EXCEPT THAT THE TOLERANCE FOR TRUSS BARS SUCH AS FIGURE 3 ON PAGE 7-4 OF THE CRSI MANUAL SHALL BE MINUS ZERO TO PLUS ½ INCH.

WEEP HOLES IN BOX CULVERT WALLS SHALL HAVE A MAXIMUM HORIZONTAL SPACING OF 10'-0" AND SHALL BE SPACED TO CLEAR ALL REINFORCING STEEL. THE DRAIN OPENING SHALL BE 4" DIAMETER AND SHALL BE PLACED 12" ABOVE THE TOP OF THE BOTTOM SLAB.

WEEP HOLES IN WINGWALLS SHALL HAVE A MAXIMUM HORIZONTAL SPACING OF 10'-0" AND SHALL BE SPACED TO CLEAR ALL REINFORCING STEEL. THERE SHALL BE A MINIMUM OF TWO (2) WEEP HOLES IN EACH WINGWALL. THE DRAIN OPENING SHALL BE 4" DIAMETER AND SHALL BE PLACED 12" ABOVE THE TOP OF THE WINGWALL FOOTING.

THE REQUIREMENTS SHOWN ON THIS DRAWING SHALL SUPERCEDE THE CORRESPONDING REQUIREMENTS ON ALL REINFORCED CONCRETE BOX CULVERT STANDARD DRAWINGS.

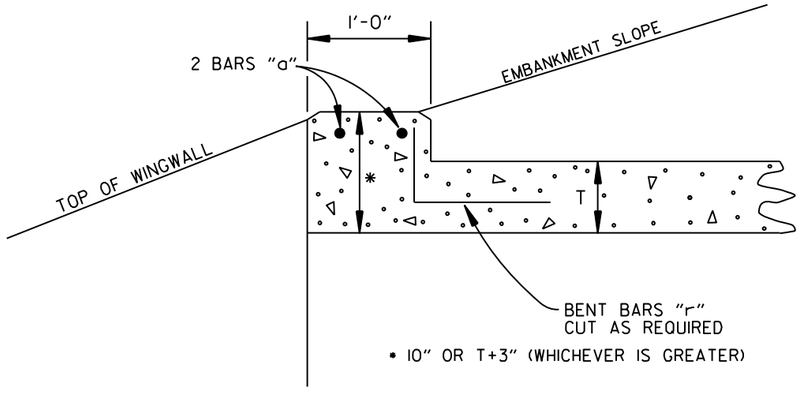

* 10" OR T+3" (WHICHEVER IS GREATER)

NOTE: FOR ALL SKEWED R.C. BOX CULVERTS THE LENGTH "K" OF THE MODIFIED HEADWALL SHALL BE EQUAL TO THE ROADWAY LENGTH "RL". THE ENDS OF THE HEADWALL SHALL BE CONSTRUCTED PARALLEL TO THE SKEW ANGLE OF THE BOX CULVERT.

R.C. BOX CULVERT HEADWALL MODIFICATIONS

DATE	REVISION	DATE FILMED
7/26/12	REV. DRAINAGE FILL MATERIAL & DETAIL	
12/15/11	REQUIRE WEEP HOLES IN BOX CULVERT WALLS	
5-25-06	REV. GEN. NOTES AND DETAILS FOR WEEP HOLES; BAR DIAGRAM	
11-16-01	ADDED WINGWALL DRAINAGE DETAIL/EDITED GEN. NOTES	
10-18-96	REV. ASTM REF. TO AASHTO & ADDED BAR DIAGRAM	
10-12-95	MOVED SOLID SODDING DETAIL TO RCB-2	
6-2-94	ADDED SOLID SODDING PLAN DETAIL	
8-5-93	REVISED PIN DIAMETER TO SPECS.	
8-15-91	DRAWN AND ISSUED	

ARKANSAS STATE HIGHWAY COMMISSION

REINFORCED CONCRETE BOX CULVERT DETAILS

STANDARD DRAWING RCB-1

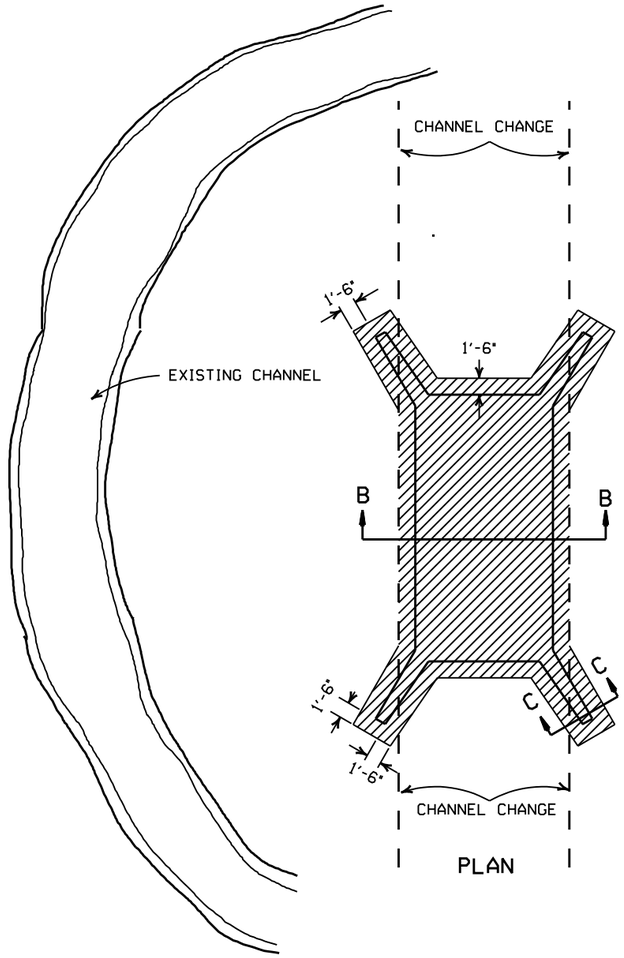

PLAN

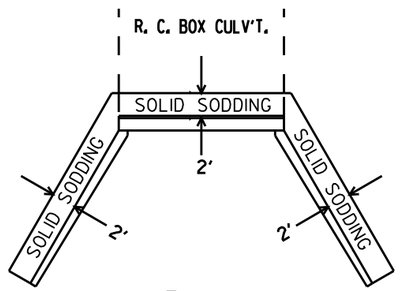

PLAN

PARTIAL SECTION SHOWING SOLID SODDING AT HEADWALLS AND WING WALLS

NOTE: LENGTH MEASURED ALONG THE CENTER OF 2' STRIP OF SOLID SODDING.

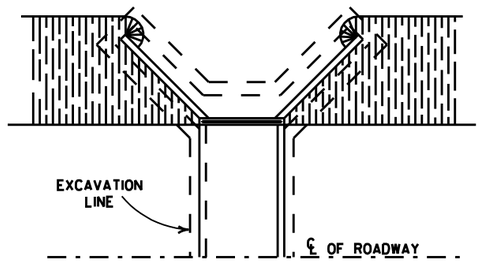

PLAN

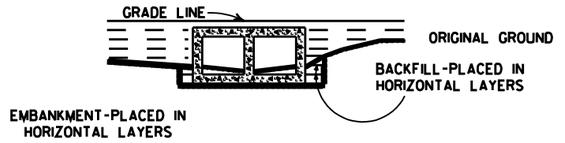

LONGITUDINAL SECTION

BACKFILL DETAILS FOR BOX CULVERT

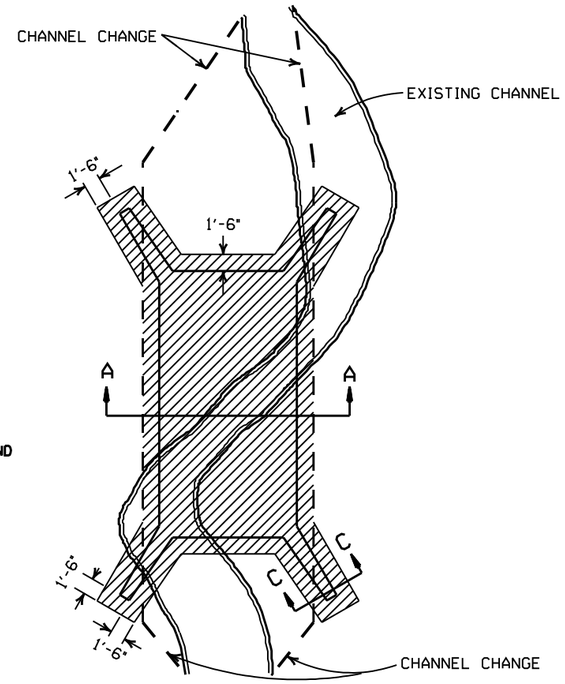

PLAN

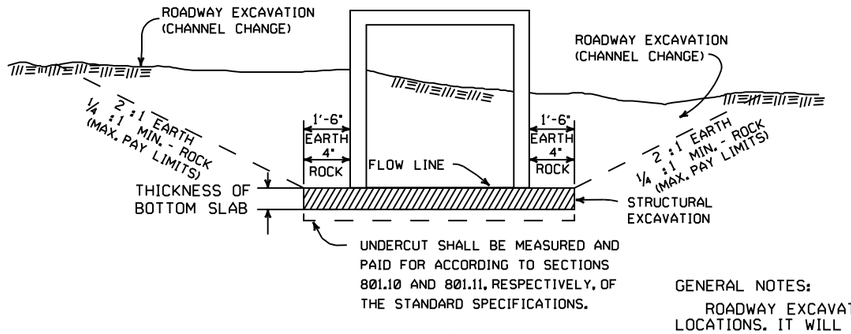

SECTION B-B

DETAILS FOR NEW CHANNELS

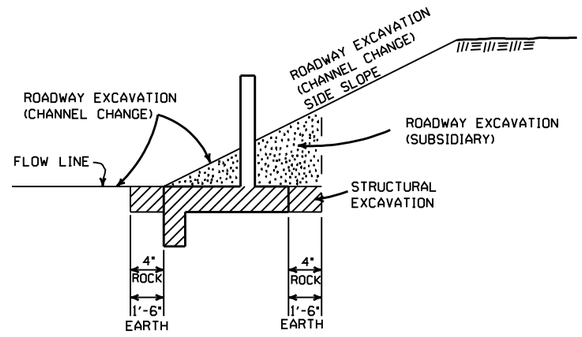

SECTION C-C

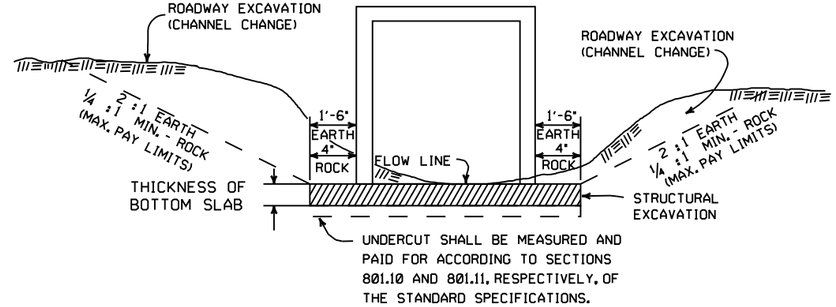

SECTION A-A

DETAILS THROUGH EXISTING CHANNELS

GENERAL NOTES:

ROADWAY EXCAVATION (CHANNEL CHANGE) WILL BE PAID FOR AT R.C. BOX CULVERT LOCATIONS. IT WILL BE PAID TO THE LIMITS ACTUALLY CUT AND WILL BE CONFINED TO THAT PORTION OF THE INDICATED AREA THAT IS ABOVE THE FLOW LINE. ROADWAY EXCAVATION (CHANNEL CHANGE) SHALL BE MEASURED BY CROSS SECTIONS AND VOLUMES COMPUTED BY AVERAGE END AREA METHOD. ALL CHANNEL CHANGES SHALL BE BROUGHT TO GRADE PRIOR TO MAKING ANY EXCAVATION FOR STRUCTURES.

EXCAVATION FOR STRUCTURES WILL BE PAID FOR AT ALL R.C. BOX CULVERT LOCATIONS. IT WILL BE PAID TO THE LIMITS SHOWN AND SHALL BE CONFINED TO THAT PORTION OF THE INDICATED AREA THAT IS BELOW THE CHANNEL FLOW LINE.

ROADWAY EXCAVATION SHOWN IN SECTION C-C ABOVE AS SUBSIDIARY WILL NOT BE MEASURED OR PAID FOR DIRECTLY, BUT PAYMENT WILL BE CONSIDERED TO BE INCLUDED IN THE VARIOUS ITEMS OF EXCAVATION.

DATE	REVISION	FILMED
11-20-03	REVISED SECTION A-A NOTE	
8-22-02	REVISED SECTION B-B NOTE	
10-12-95	COMBINED 1891B AND 1888A	
1-4-83	REVISED GENERAL NOTES	674-1-4-83
	AND ADDED MAXIMUM PAY	
	LIMIT NOTES.	
2-2-76	EXCAV. PAY LIMITS	917-2-2-76
10-2-72	REVISED AND REDRAWN	564-10-16-72

ARKANSAS STATE HIGHWAY COMMISSION

EXCAVATION PAY LIMITS, BACKFILL, & SOLID SODDING FOR BOX CULVERTS

STANDARD DRAWING RCB-2

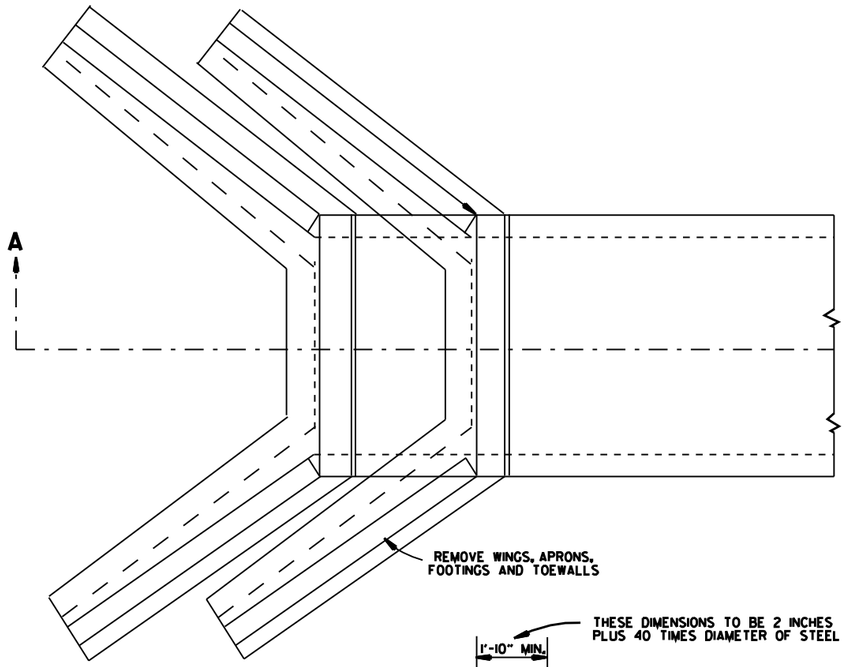

TOP VIEW
R.C. BOX CULVERT

SECTION A-A

METHOD 1

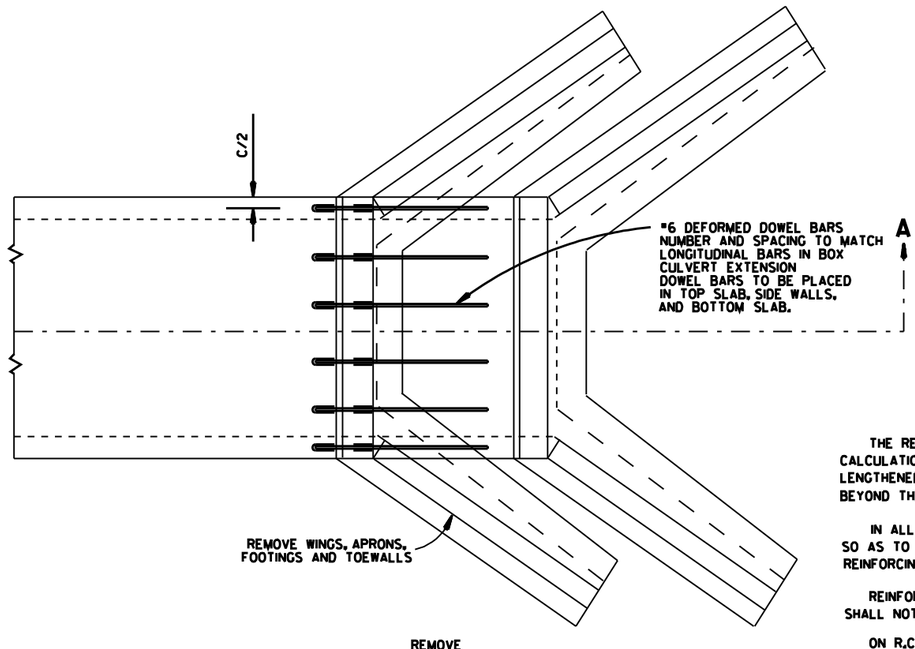

TOP VIEW
R.C. BOX CULVERT

SECTION A-A

METHOD 2

GENERAL NOTES

	USE FOR METHOD
THE RESIDENT ENGINEER WILL MAKE INDIVIDUAL CALCULATIONS OF QUANTITIES FOR EACH STRUCTURE LENGTHENED, MAKING NO ALLOWANCE FOR OVERBREAKAGE BEYOND THE LINES INDICATED.	1
IN ALL INSTANCES CONCRETE SHALL BE REMOVED SO AS TO PERMIT FULL 40 DIAMETER SPLICE OF REINFORCING STEEL.	1
REINFORCING STEEL REMOVED FROM EXISTING STRUCTURE SHALL NOT BE REUSED IN CONSTRUCTING EXTENSION.	1&2
ON R.C. BOX CULVERTS THAT HAVE AN EXISTING CONCRETE APRON, THE CONCRETE APRON SHALL BE REMOVED WITH THE WINGS. THE COST OF REMOVING ALL OLD CONCRETE WILL BE INCLUDED IN THE PRICE BID PER CUBIC YARD FOR NEW CONCRETE OF THE CLASS SPECIFIED AND NO ADDITIONAL COMPENSATION WILL BE ALLOWED.	1&2
MATERIALS FOR SECURING DOWEL BARS SHALL MEET THE REQUIREMENTS OF SECTION 507.02 OF THE STANDARD SPECIFICATIONS.	2
DOWEL BARS SHALL BE INSTALLED AS FOLLOWS: THE DRILLING PROCEDURE SHALL BE APPROVED BY THE ENGINEER. THE FILLING SYSTEM SHALL BE APPROVED BY THE ENGINEER, AND SHALL BE AN INJECTION-TYPE SYSTEM WHICH WILL INSURE THAT SUFFICIENT MATERIAL IS INJECTED SO IT COMPLETELY SURROUNDS THE BARS AND FILLS THE HOLES.	2
THE CONTRACTOR SHALL HAVE THE OPTION OF USING EITHER METHOD 1 OR METHOD 2, REGARDLESS OF WHICH METHOD IS USED, PAY QUANTITIES WILL BE CALCULATED BASED ON METHOD 1.	1&2

NOTE:
NO PART OF THIS STANDARD IS TO BE USED FOR ANY DETAILS RELATIVE TO NEW CONSTRUCTION.

SEE STANDARD DRAWING LISTED IN TABULATION OF STRUCTURES FOR ALL NEW CONSTRUCTION DETAILS.

DATE	REVISION	DATE FILM
10-12-95	CHANGED DRAWING # FROM 144-A	
4-1-93	ADDED GENERAL NOTE	
10-1-92	ADDED ALT. METHOD OF EXTENSION	
11-30-89	REDRAWN	
1-4-83	ELIMINATED CONCRETE CLASS	
12-20-56	RETRACED	

ARKANSAS STATE HIGHWAY COMMISSION

METHOD OF EXTENDING EXISTING R.C. BOX CULVERTS

STANDARD DRAWING RCB-3

SUPERELEVATION TABLE FOR TWO - WAY TRAFFIC

DEGREE OF CURVE	30 MPH			35 MPH			40 MPH			45 MPH			50 MPH			55 MPH			60 MPH			65 MPH			70 MPH			75 MPH		
	e	Ls (FT)		e	Ls (FT)		e	Ls (FT)		e	Ls (FT)		e	Ls (FT)		e	Ls (FT)		e	Ls (FT)		e	Ls (FT)		e	Ls (FT)		e	Ls (FT)	
		MINIMUM	DESIRABLE		MINIMUM	DESIRABLE		MINIMUM	DESIRABLE		MINIMUM	DESIRABLE		MINIMUM	DESIRABLE		MINIMUM	DESIRABLE		MINIMUM	DESIRABLE		MINIMUM	DESIRABLE		MINIMUM	DESIRABLE		MINIMUM	DESIRABLE
0° 15'	NC			NC			NC			NC			NC			NC			NC			NC			NC			NC		
0° 30'	NC			NC			NC			NC			NC			NC			RC	96		RC	96		RC	96		0.022	101	
0° 45'	NC			NC			NC			NC			RC	96		RC	96		0.024	106		0.026	110		0.030	120		0.032	125	
1° 00'	NC			NC			NC			RC	90		0.022	101		0.026	110		0.030	120		0.034	130		0.038	139		0.042	149	300
1° 15'	NC			NC			RC	84		0.022	95		0.028	115		0.032	125		0.038	139		0.042	149		0.046	158	300	0.052	173	
1° 30'	NC			RC	78		0.022	88		0.028	108		0.032	125		0.038	139		0.044	154		0.050	168	300	0.056	182		0.062	197	
1° 45'	RC	72		RC	78		0.026	97		0.030	113		0.036	134		0.044	154		0.050	168		0.056	182		0.064	202		0.070	216	
2° 00'	RC	72		0.024	86		0.028	101		0.034	122		0.042	149		0.048	163		0.056	182		0.064	202		0.070	216		0.080	240	
2° 15'	RC	72		0.026	90		0.032	109		0.038	131		0.046	158		0.054	178	300	0.062	197		0.070	216		0.078	235	350	0.088	259	350
2° 30'	0.022	75		0.028	94		0.034	113		0.042	140		0.050	168		0.058	187		0.068	211		0.076	230		0.086	254		0.096	278	
2° 45'	0.024	79		0.030	98		0.038	122		0.046	149	200	0.054	178	250	0.064	202		0.072	221		0.082	245		0.092	269		0.100	288	400
3° 00'	0.026	83		0.034	105		0.040	126		0.050	158		0.058	187		0.068	211		0.078	235		0.088	259		0.098	283	400	D MAX = 2° 45'		
3° 15'	0.028	86		0.036	109		0.044	134		0.052	162		0.062	197		0.072	221		0.082	245		0.092	269		0.100	288				
3° 30'	0.030	90		0.038	113		0.046	139	200	0.056	171		0.066	206		0.076	230		0.086	254		0.096	278	350	D MAX = 3° 30'					
3° 45'	0.032	93		0.040	117		0.050	147		0.058	176		0.070	216		0.080	240		0.090	264		0.098	283							
4° 00'	0.034	97		0.042	121	200	0.052	151		0.062	185		0.072	221		0.084	250		0.094	274	350	0.100	288		D MAX = 4° 15'					
4° 15'	0.036	100		0.044	125		0.054	155		0.064	189		0.076	230		0.086	254		0.096	278										
4° 30'	0.036	100		0.046	129		0.056	160		0.068	198		0.078	235		0.090	264		0.098	283										
4° 45'	0.038	104	200	0.048	133		0.060	168		0.070	203		0.082	245		0.092	269	350	0.100	288										
5° 00'	0.040	108		0.050	137		0.062	172		0.072	207	250	0.084	250		0.094	274		D MAX = 5° 15'											
5° 30'	0.044	115		0.054	144		0.066	181		0.078	221		0.088	259	300	0.098	283													
6° 00'	0.046	119		0.058	152		0.070	189		0.082	230		0.092	269		0.100	288													
6° 30'	0.050	126		0.062	160		0.074	198	250	0.086	239		0.096	278		D MAX = 6° 30'														
7° 00'	0.052	130		0.064	164		0.078	206		0.090	248		0.098	283																
7° 30'	0.054	133		0.068	172		0.080	210		0.092	252	300	0.100	288																
8° 00'	0.058	140		0.070	176		0.084	219		0.094	257		D MAX = 8° 25'																	
8° 30'	0.060	144		0.072	179		0.086	223	250	0.096	261																			
9° 00'	0.062	148		0.076	187		0.088	227		0.098	266																			
9° 30'	0.064	151		0.078	191		0.092	235		0.100	270																			
10° 00'	0.066	155		0.080	195		0.094	240		D MAX = 10° 30'																				
11° 00'	0.070	162		0.084	203		0.096	244																						
12° 00'	0.074	169		0.088	211	250	0.098	248																						
13° 00'	0.076	173		0.090	215		0.100	252	300																					
14° 00'	0.080	180		0.094	222		D MAX = 13° 45'																							
15° 00'	0.082	184		0.096	226																									
16° 00'	0.086	191		0.098	230																									
17° 00'	0.088	194		0.100	234																									
18° 00'	0.090	198	250	D MAX = 19° 30'																										
19° 00'	0.092	202																												
20° 00'	0.094	205																												
21° 00'	0.096	209																												
22° 00'	0.096	209																												
23° 00'	0.098	212																												
24° 00'	0.098	212																												
25° 00'	0.100	216																												
D MAX = 28° 30'																														

ABBREVIATIONS

NC - NORMAL CROWN
RC - REVERSE CROWN, SUPERELEVATION AT NORMAL CROWN SLOPE
e - RATE OF SUPERELEVATION (FT. PER FT.)
Ls - LENGTH OF SUPERELEVATION TRANSITION (FT.)
L - DISTANCE FROM BEGINNING OF SUPERELEVATION TRANSITION TO ANY POINT (FT.)
d - WIDTH OF PAVEMENT (FT.) OR WIDTH OF SUBGRADE (FT.)
C - NORMAL CROWN (FT.)

GENERAL NOTES

1. ON PAVEMENT WITH TWO-WAY TRAFFIC, THE SUPERELEVATION SHALL BE REVOLVED ON THE INSIDE PAVEMENT EDGE UNLESS OTHERWISE NOTED ON THE PLANS
2. SUPERELEVATION VALUES SHOWN ON THE CROSS SECTIONS ARE VALUES (+) OR (-) TO BE ADDED TO OR SUBTRACTED FROM THE POINT OF CONTROL.
3. LENGTHS FOR L MAY BE ROUNDED IN MULTIPLES OF 25 FT. OR 50 FT. TO PERMIT SIMPLER CALCULATIONS.
4. PAVEMENTS WIDER THAN 2 LANES SHALL HAVE ADDITIONAL TRANSITION LENGTHS AS FOLLOWS:

3 LANE UNDIVIDED - - - - - +20%
4 LANE UNDIVIDED - - - - - +50%
5 LANE UNDIVIDED - - - - - +80%
6 LANE UNDIVIDED - - - - - +100%

NOTE: MAINTAIN NORMAL CROWN ON INSIDE UNTIL SUPERELEVATION EXCEEDS 2C.

RATE OF SUPERELEVATION SHALL BE COMPUTED ON STRAIGHT LINE METHOD USING APPLICABLE Ls.

SUPERELEVATION FORMULA = $\frac{Lde}{Ls}$

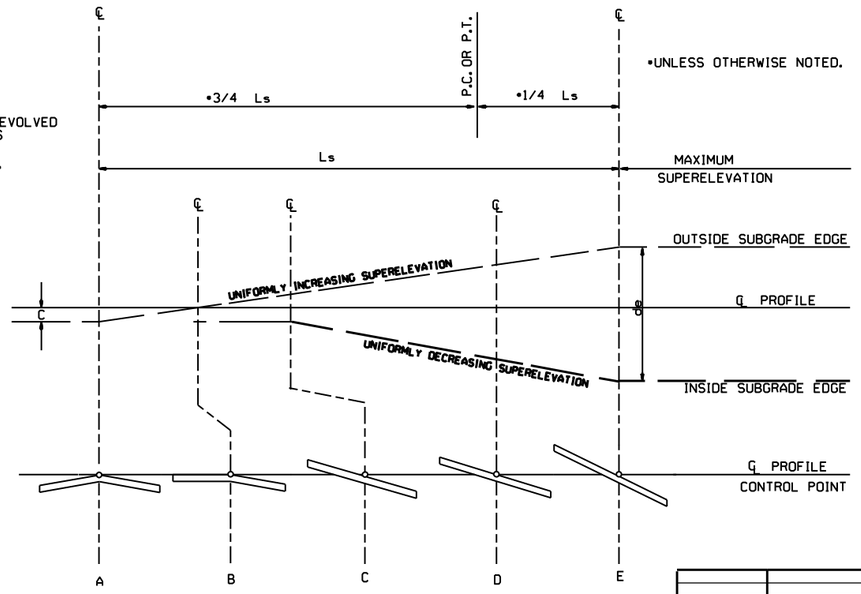

STANDARD METHOD WHEN SUPERELEVATION REVOLVES AROUND CENTER LINE

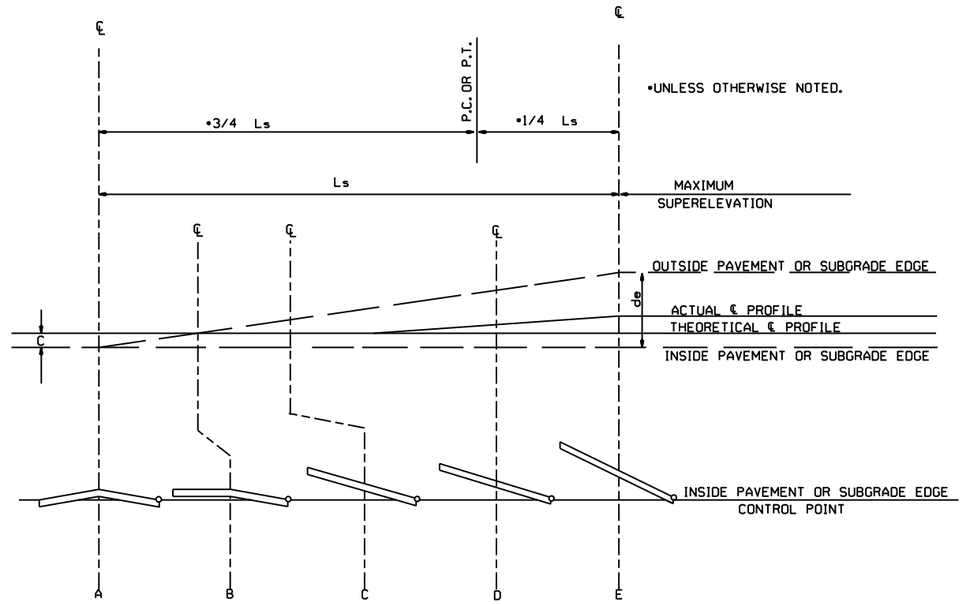

STANDARD METHOD WHEN SUPERELEVATION REVOLVES AROUND INNER SUBGRADE POINT OR INNER PAVEMENT EDGE

NOTE: MAINTAIN NORMAL CROWN ON INSIDE UNTIL SUPERELEVATION EXCEEDS 2C.

DATE	REVISION	DATE FILLMED
11-07-19	REVISED SUPERELEVATION TABLE	
10-18-96	ADDED FORMULA	
01-09-87	ISSUED	534-1-9-87

ARKANSAS STATE HIGHWAY COMMISSION

TABLES AND METHOD OF SUPERELEVATION FOR TWO-WAY TRAFFIC

STANDARD DRAWING SE-2

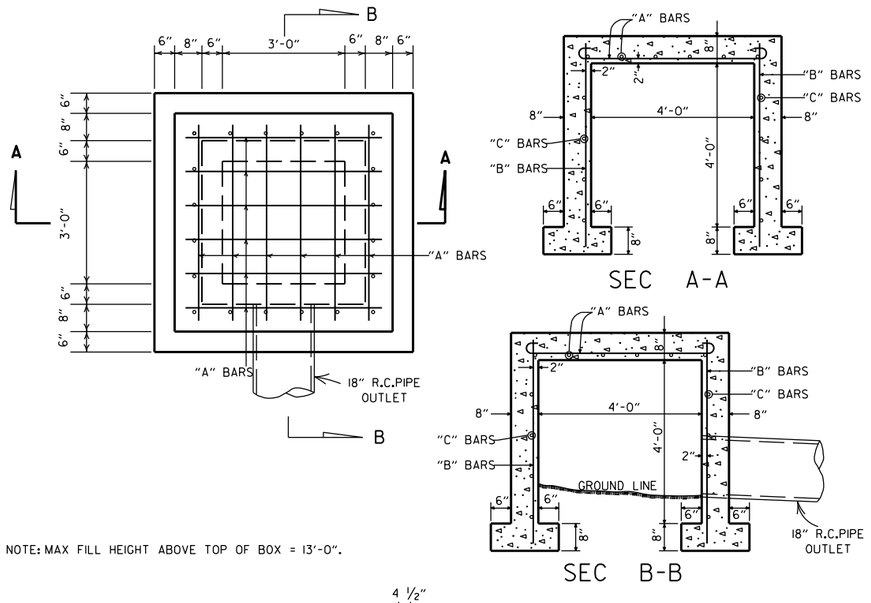

NOTE: MAX FILL HEIGHT ABOVE TOP OF BOX = 13'-0".

STEEL SCHEDULE

BARS	NUMBER	LENGTH	SPACING
"A"	12	6'-0"	10"
"B"	20	5'-0"	10 ½"
"C"	16	5'-0"	12"

ALL STEEL TO BE #4 BARS

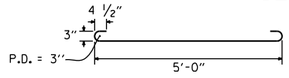

QUANTITIES

CONCRETE 3.31 CU. YDS.
REINFORCING STEEL 168 LB.

GENERAL NOTE:

THE PAY ITEMS FOR REINFORCED CONCRETE SPRING BOXES SHALL BE FOR THE QUANTITTIES OF CONCRETE OF THE CLASS SPECIFIED, REINFORCING STEEL, EXCAVATION FOR STRUCTURES AND 18" R.C. PIPE CULVERT.

REINFORCED CONCRETE SPRING BOX

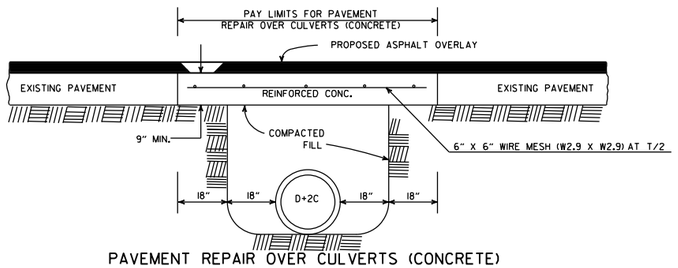

PAVEMENT REPAIR OVER CULVERTS (CONCRETE)

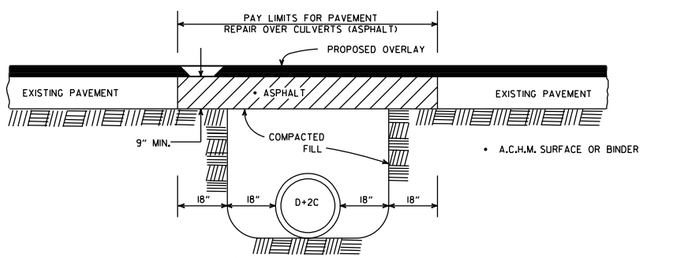

PAVEMENT REPAIR OVER CULVERTS (ASPHALT)

DETAIL SHOWING REPAIR OF EXISTING PAVEMENT AT CULVERT INSTALLATIONS

• A 2" MIN. HIGH CURB IS REQUIRED WHEN CONCRETE WALK IS ADJACENT TO THE HAND RAILING. PAYMENT FOR CURB SHALL BE CONSIDERED INCLUDED IN THE PRICE BID FOR CONCRETE WALKS.

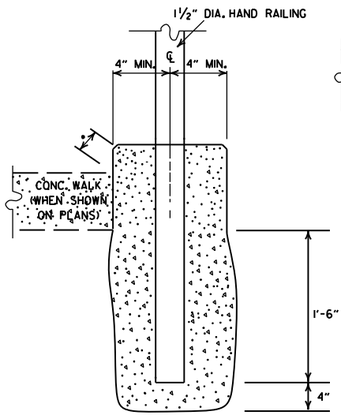

DETAIL OF HAND RAILING SET IN CONCRETE

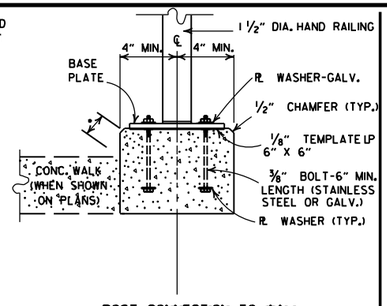

POST CONNECTION TO WALL

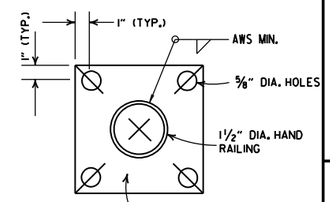

BASE PLATE

POST CONNECTION DETAILS

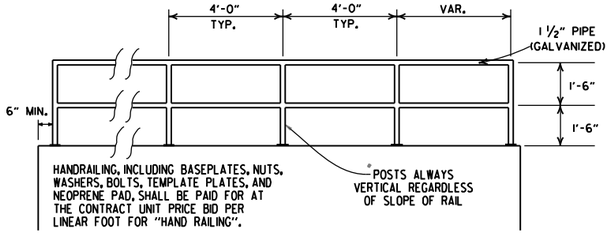

HAND RAILING SHALL CONFORM TO SECTION 633.

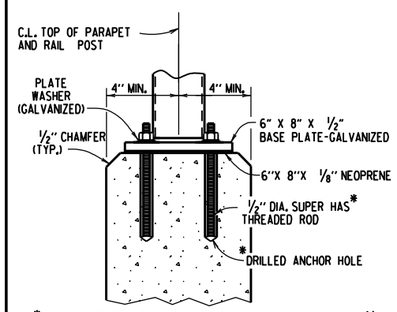

*HILTI HIT RE 500 EPOXY ADHESIVE ANCHOR SYSTEM WITH 4 ½" EMBEDMENT OR APPROVED EQUAL.

THE ADHESIVE ANCHOR SYSTEM SHALL BE INSTALLED IN ACCORDANCE WITH MANUFACTURER'S RECOMMENDATIONS.

POST CONNECTION TO WALL

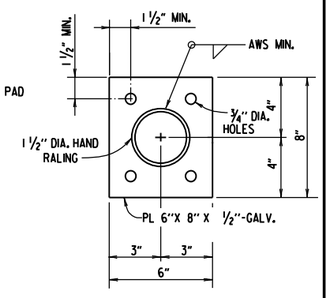

BASE PLATE

DETAILS OF ALTERNATE POST ANCHOR SYSTEM (EPOXY ADHESIVE ANCHORS)

HAND RAILING DETAILS

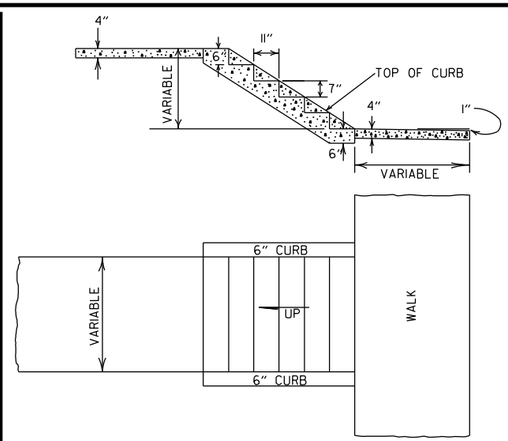

GENERAL NOTES

1. RISE AND TREAD DIMENSIONS OF STEPS MAY BE VARIED AS DIRECTED BY THE ENGINEER, HOWEVER, TREAD WIDTHS SHALL BE 11" MIN. ALL STEPS IN A FLIGHT SHALL HAVE CONSISTENT TREAD & RISER DIMENSIONS.
2. 1" TRANSVERSE EXPANSION JOINTS SHALL BE PLACED IN CONCRETE WALKS AT 45' INTERVALS.

DETAILS OF CONCRETE STEPS & WALKS

DATE	REVISION	DATE FILMED
10-25-18	REVISED DETAIL SHOWING REPAIR OF EXISTING PAVEMENT AT CULVERT INSTALLATIONS	
9-12-13	REVISED REINFORCED CONCRETE SPRING BOX	
7-26-12	REMOVED RETAINING WALL DETAILS & REVISED HAND RAILING DETAILS	
4-17-08	REV. JOINT & FOOTING STEP DETAILS	
11-29-07	REVISED RETAINING WALL DRAINAGE	
5-25-06	REVISED PVMT REPAIR OVER CULVERTS (CONC); REVISED REINFORCED CONC SPRING BOX	
10-9-03	REVISED PIPE RAILING DETAILS TO HAND RAILING DETAILS	
4-10-03	REVISED RETAINING WALL DRAWING	
8-22-02	ADDED HAND RAILING DETAIL	
11-16-01	REVISED PVMT REPAIR OVER CULVERTS (CONC); CORRECTED SPELLING IN GENERAL NOTES	
11-18-98	ADDED GENERAL NOTES TO CONCRETE STEPS & WALKS	
7-02-98	ENLARGED PIPE	
4-03-97	ADDED NOTE TO STEEL BAR SCHED.	
10-18-96	CORRECTED SPELLING	
4-26-96	ADD WEEP HOLE;REV. JOINT SPACING IN RET. WALL	
6-2-94	CHANGED CONST. TO CONTRACTION JOINT	
10-1-92	CHANGED MESH FABRIC TO WIRE MESH	10-1-92
8-15-91	DELETED HDWL MODIFICATION DETAIL	8-15-91
11-8-90	DELETED COLD MIX FROM CULV'T. REPAIR	11-8-90
11-30-89	REV. RETAINING WALL STEEL SCHEDULE	11-30-89
11-17-88	V BARS BEHIND ARROW	665-11-17-88
7-15-88	REV. PAVEMENT REPAIR ADDED HDWL. MODS, DEL. PIPE UNDERDRAINS	649-7-15-88
11-1-84	REV. TRENCH FOR PIPE UNDERDRAIN	510-11-1-84
1-4-83	ELIMINATED CONC. CLASS & ADDED CHAMFER NOTE	682-1-4-83
3-2-81	SPELLING OF "UNDERDRAIN"	721-3-2-81
4-20-79	REV. UNDERDRAIN DET& PAVEMENT REPAIR	674-4-20-79
2-2-76	12"MIN. GRAN. MAT'L. OVER PIPE	919-2-2-76
4-10-75	REM. SPECS. FOR GRAN. MAT'L.	568-4-10-75-853
5-22-74	GRANULAR MAT'L. TO BE SB-3	567-5-22-74-740
10-2-72	REVISED AND REDRAWN	564-10-16-72

ARKANSAS STATE HIGHWAY COMMISSION

DETAILS OF SPECIAL ITEMS

STANDARD DRAWING SI-1

R1-1



STANDARD 30"X30"
EXPRESSWAY 36"X36"
SPECIAL 48"X48"

R1-2

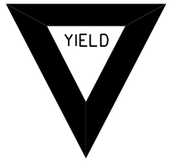

STD. 36"X36"X36"
EXPWY. 48"X48"X48"
FWY. 60"X60"X60"

R2-1



STD. 24"X30"
EXPWY. 36"X48"
FWY. 48"X60"

W3-5



STD. 36"X36"
EXPWY. 48"X48"
FWY. 48"X48"

W3-5a



STD. 36"X36"
EXPWY. 48"X48"
FWY. 48"X48"

R4-1



STD. 24"X30"
EXPWY. 36"X48"
FWY. 48"X60"

R4-2



STD. 24"X30"
EXPWY. 36"X48"
FWY. 48"X60"

R5-1



STD. 30"X30"
EXPWY. 36"X36"
SPECIAL 48"X48"

RII-2



48"X30"

RII-3A

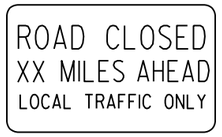

60"X30"

RII-4



60"X30"

W21-5a



STD. 36"X36"
FWY. 48"X48"

WI-1



STD. 36"X36"
FWY. 48"X48"

WI-2



STD. 36"X36"
FWY. 48"X48"

WI-3



STD. 48"X48"

WI-4



STD. 48"X48"

WI-6



STD. 48"X24"
SPECIAL 60"X30"

WI-8



STD. 18"X24"
SPECIAL 24"X30"
EXPWY. 30"X36"
FWY. 36"X48"

W3-1



STD. 36"X36"
SPECIAL 48"X48"

W3-2



STD. 36"X36"
SPECIAL 48"X48"

W4-2

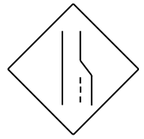

STD. 36"X36"
FWY. 48"X48"

W5-1



STD. 36"X36"
SPECIAL 48"X48"

W6-3



EXPWY. 36"X36"
SPECIAL 48"X48"

W8-7



EXPWY. 36"X36"
FWY. 48"X48"

W9-2



STD. 36"X36"
FWY. 48"X48"

WI3-1



STD. 24"X24"

W20-1



STD. 48"X48"

W20-2



STD. 48"X48"

W20-3



STD. 48"X48"

W20-4



STD. 48"X48"

W20-5



STD. 48"X48"

W20-7a



STD. 36"X36"
FWY. 48"X48"

W21-2



STD. 30"X30"
SPECIAL 36"X36"

W21-5



STD. 30"X30"
SPECIAL 36"X36"

W24-1



STD. 36"X36"

WI-4b



STD. 48"X48"

R56-1



STD. 18"X18"

W8-11



STD. 36"X36"
FWY. 48"X48"

W8-9



STD. 36"X36"
FWY. 48"X48"

G20-1



60"X24"

G20-2

48"X24"

OM-3L OM-3R

12"X36"

M4-9

STD. 30"X24"
SPECIAL 48"X36"
SPECIAL 60"X48"

M4-10

48"X18"

R55-1

36"X60"

• USE 6" C LETTERS
•• USE 4" D LETTERS

ADVANCE DISTANCES
(XXXX)

500 FT	½ MILE
1000 FT	¾ MILE
1500 FT	1 MILE
	AHEAD

GENERAL NOTES:

1. ALL TRAFFIC CONTROL DEVICES USED ON ROAD CONSTRUCTION SHALL CONFORM TO THE MANUAL ON UNIFORM TRAFFIC CONTROL DEVICES, LATEST EDITION, AND TO THE STANDARD HIGHWAY SIGNS, LATEST EDITION, OR AS APPROVED BY THE FEDERAL HIGHWAY ADMINISTRATION.
2. TRAFFIC CONTROL DEVICES SHALL BE SET UP JUST BEFORE THE START OF CONSTRUCTION OPERATIONS AND SHALL BE PROPERLY MAINTAINED DURING THE TIME SUCH CONDITIONS EXIST. THEY SHALL REMAIN IN PLACE ONLY AS LONG AS NEEDED AND REMOVED THEREAFTER.
3. EXISTING SIGNS AND CONSTRUCTION SIGNS SHALL BE KEPT IN PROPER POSITION, AND BE CLEAN AND LEGIBLE AT ALL TIMES. SIGNS THAT DO NOT APPLY TO EXISTING CONDITIONS SHALL BE REMOVED. SIGNS THAT ARE DAMAGED, DEFACED, OR THAT ACCUMULATE DIRT DURING CONSTRUCTION SHALL BE CLEANED, REPAIRED, OR REPLACED.
- 4. SIGNS ARE USUALLY MOUNTED ON A SINGLE POST, ALTHOUGH THOSE WIDER THAN 36" OR LARGER THAN 10 SQ. FT. SHALL BE MOUNTED ON TWO POSTS OR ABOVE A TYPE III BARRICADE.
- 5. SIGN POSTS DIRECT BURIED IN SOIL SHALL BE 2 LB. MINIMUM CHANNEL POST OR 4"x4" WOOD POSTS. CHANNEL POSTS SHALL BE PAINTED GREEN. WOOD POSTS SHALL BE PAINTED WHITE. ALL POSTS SHALL BE NEATLY CONSTRUCTED, AND SHALL BE REPLUMBED, CLEANED, OR REPAIRED AS NEEDED FOR THE DURATION OF THE JOB. THERE SHALL NOT BE MORE THAN 2 POSTS IN A 7' PATH FOR WOOD OR CHANNEL POSTS. ANY CHANNEL POST SPLICE SHALL BE IN ACCORDANCE WITH STANDARD DRAWING TC-3.
6. POST MOUNTED SIGNS IN RURAL AREAS SHALL BE CONSTRUCTED WITH THE NEAR EDGE OF THE SIGN FROM 6 TO 12 FEET FROM THE PAVEMENT EDGE. SIGNS IN URBAN AREAS AND BARRICADE MOUNTED SIGNS SHALL BE MOUNTED A MINIMUM OF 2 FEET FROM THE PAVEMENT EDGE.
7. ALL POST AND BARRICADE MOUNTED SIGNS MOUNTED IN URBAN AREAS SHALL BE MOUNTED A MINIMUM DISTANCE OF 7' FROM THE BOTTOM OF THE SIGN TO THE ROADWAY SURFACE. ALL POST AND BARRICADE MOUNTED SIGNS MOUNTED IN RURAL AREAS SHALL BE MOUNTED A MINIMUM DISTANCE OF 7' FROM THE BOTTOM OF THE SIGN TO THE ROADWAY SURFACE, EXCEPT A MINIMUM OF 6' SHALL BE USED WHEN MOUNTING AN ADVISORY SIGN BELOW A WARNING SIGN. TEMPORARY SIGNS MAY BE MOUNTED ON PORTABLE SUPPORTS FOR INTERMEDIATE TERM STATIONARY WORK CONDITIONS. THE SIGNS MINIMUM MOUNTING HEIGHT SHALL BE 5'. RETROREFLECTIVE DEVICES SHALL BE USED. TEMPORARY SIGNS MAY BE MOUNTED ON PORTABLE SUPPORTS FOR SHORT-TERM, SHORT DURATION, AND MOBILE CONDITIONS. THEY SHALL BE NO LESS THAN ONE (1) FOOT ABOVE THE TRAVELED WAY. LONG-TERM STATIONARY SIGNS SHALL BE DIRECT BURIED IN SOIL, UNLESS CONDITIONS NECESSITATE THE USE OF PORTABLE SIGNS, OR AS APPROVED BY THE ENGINEER. CONCRETE PADS, CONCRETE OR ROCK BALLAST, OR OTHER SOLID MATERIALS SHALL NOT BE UTILIZED WITH PORTABLE SIGN SUPPORTS.
8. FLAGGERS SHALL USE REFLECTORIZED STOP-SLOW PADDLES. FLAGS MAY BE USED ONLY FOR EMERGENCY SITUATIONS.
9. MOST OF THE SIGNS SHOWN ARE ORIENTED TO THE RIGHT. HOWEVER, THIS DOES NOT PRECLUDE THE USE OF MIRROR IMAGES OF THESE SIGNS WHERE THE REVERSE ORIENTATION MIGHT BETTER CONVEY TO MOTORISTS THE PROPER DIRECTION OF MOVEMENT.
10. R55-1 SIGNS SHALL BE PLACED AT LEAST 1500' BUT NOT MORE THAN 1 MILE IN ADVANCE OF THE WORK ZONE. IF A SPEED LIMIT REDUCTION IS IN EFFECT, THE SIGN SHALL BE PLACED A MINIMUM OF 500' IN ADVANCE OF THE "REDUCED SPEED AHEAD" SIGN.

• NOTE: SUPPORTS FOR SIGNS, BARRICADES, AND VERTICAL PANELS THAT ARE DIFFERENT FROM THE REQUIREMENTS SHOWN IN NOTES 4 & 5, BUT MEET THE REQUIREMENTS OF MANUAL FOR ASSESSING SAFETY HARDWARE (MASH), WILL BE ACCEPTED. COMPLIANCE WITH THE REQUIREMENTS OF MANUAL FOR ASSESSING SAFETY HARDWARE (MASH) IS REQUIRED FOR ALL PROJECTS.

DATE	REVISION	FILMED
11-07-19	REVISED FOR MASH	
4-13-17	DELETED RSP-1 & ADDED W21-5a	
9-2-15	REVISED REDUCED SPEED LIMIT AHEAD SIGNS REVISED ROAD WORK NEXT XX MILES	
12-15-11	REVISED W24-1	
11-17-10	DELETED W8-9a & ADDED W8-9	
10-15-09	ADDED REFERENCE TO MASH & ADDED SIGN W24-1	
4-17-08	REVISED SIGN DESIGNATIONS	
11-18-04	REVISED NOTES	
10-9-03	REVISED NOTE 1	
11-16-01	REVISED NOTE 7	
9-28-00	REVISED NOTE	
11-18-98	ADDED NOTE	
6-26-97	REVISED NOTE 5	
4-03-97	REVISED NOTE 5	
10-18-96	ADDED CONTROLLED ACCESS HWY. SIGN & TO NOTE 7	
10-12-95	ADDED R55-1	
6-8-95	REVISED TO CORRECT SIGN ILLUSTRATIONS	6-8-95
2-2-95	REVISED PER PART VI, MUTCD SEPT. 3, 1993	
8-15-91	DRAWN AND PLACED IN USE	

ARKANSAS STATE HIGHWAY COMMISSION

STANDARD TRAFFIC CONTROLS FOR HIGHWAY CONSTRUCTION

STANDARD DRAWING TC-1

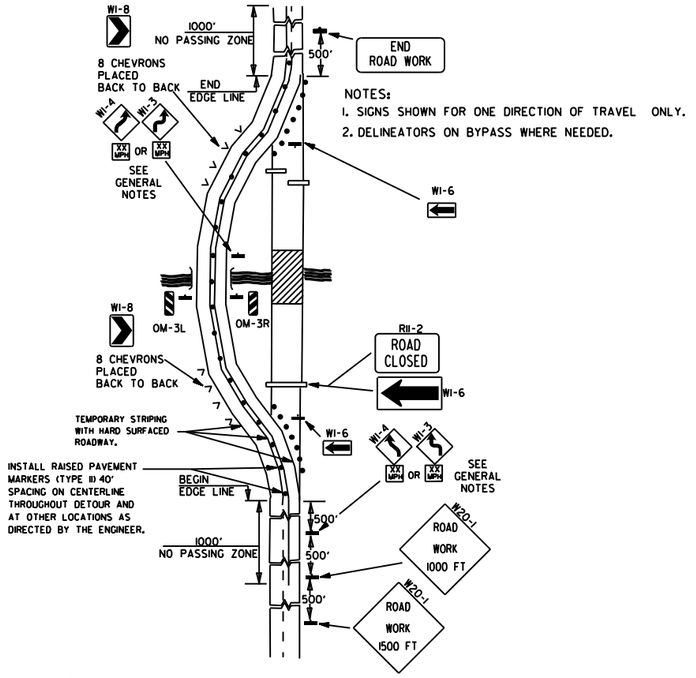

NOTES:
1. SIGNS SHOWN FOR ONE DIRECTION OF TRAVEL ONLY.
2. DELINEATORS ON BYPASS WHERE NEEDED.

(A) TYPICAL APPLICATION OF TRAFFIC CONTROL DEVICES ON A 2-LANE HIGHWAY WHERE THE ENTIRE ROADWAY IS CLOSED AND A BYPASS DETOUR IS PROVIDED.

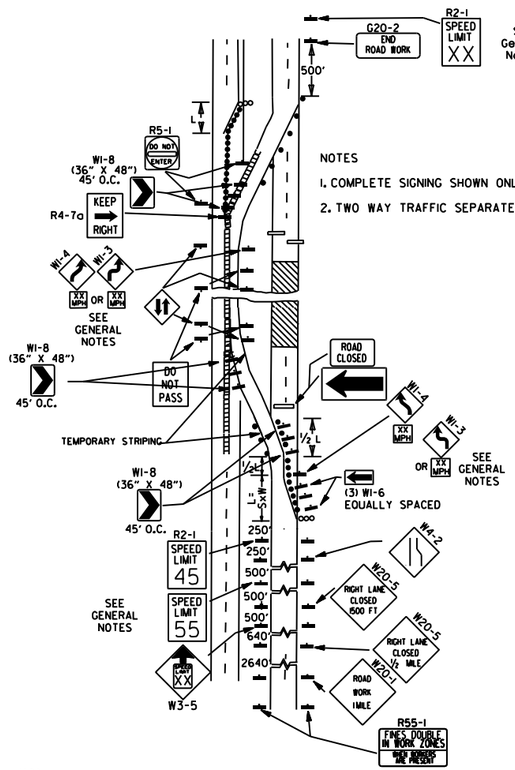

NOTES
1. COMPLETE SIGNING SHOWN ONLY IN CROSSOVER DIRECTION.
2. TWO WAY TRAFFIC SEPARATED WITH POSITIVE BARRIER.

(B) TYPICAL APPLICATION - 4-LANE DIVIDED ROADWAY WHERE ONE ROADWAY IS CLOSED.

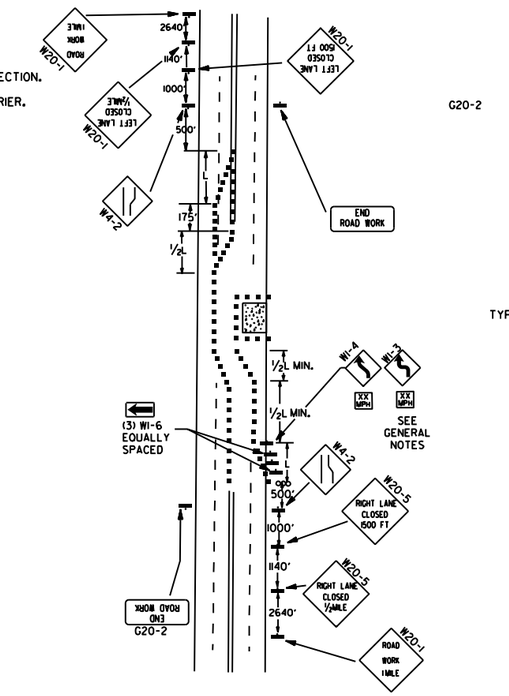

(C) TYPICAL APPLICATION - 4-LANE UNDIVIDED ROADWAY WHERE HALF OF THE ROADWAY IS CLOSED.

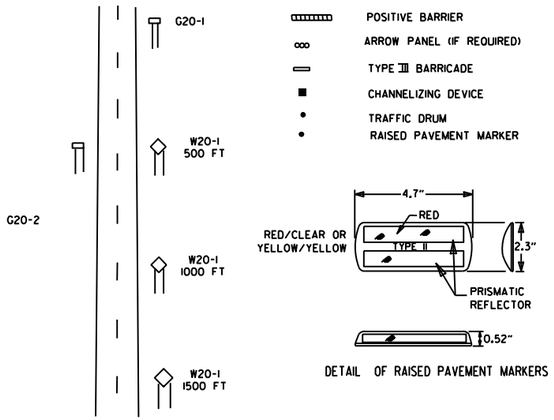

DETAIL OF RAISED PAVEMENT MARKERS

TYPICAL ADVANCE WARNING SIGN PLACEMENT

TAPER FORMULAE:

L=SXW FOR SPEEDS OF 45MPH OR MORE.

$L = \frac{WS^2}{60}$ FOR SPEEDS OF 40MPH OR LESS.

WHERE:

L= MINIMUM LENGTH OF TAPER.

S= NUMERICAL VALUE OF POSTED SPEED LIMIT PRIOR TO WORK OR 85TH PERCENTILE SPEED.

W= WIDTH OF OFFSET.

GENERAL NOTES:

1. THE MAINTENANCE DIVISION SHALL CONDUCT A BALL BANK STUDY TO DETERMINE THE ADVISORY SPEED LIMIT PRIOR TO OPENING TO TRAFFIC. THE ADVISORY SPEED WILL BE POSTED ON W1-3 OR W1-4 CURVE WARNING SIGNS. USE W1-4 WHEN SPEED IS GREATER THAN 30MPH AND W1-3 WHEN 30MPH OR LESS
2. WHEN THE EXISTING SPEED LIMIT IS 55MPH AND THE PLANS REQUIRE A SPEED LIMIT OF 45MPH, THE R2-1(55) SHALL BE OMITTED AND THE W3-5 SHALL BE INSTALLED AT THAT LOCATION. ADDITIONAL R2-1 45MPH SPEED LIMIT SIGNS SHALL BE INSTALLED AT A MAXIMUM OF 1MILE INTERVALS. AT THE END OF THE WORK AREA A R2-1(XX) SHALL BE INSTALLED TO MATCH ORIGINAL SPEED LIMIT.
3. WHEN THE EXISTING SPEED LIMIT IS 65MPH AND THE PLANS REQUIRE A SPEED LIMIT OF 55MPH, THE R2-1(45) SHALL BE OMITTED. ADDITIONAL R2-1 55MPH SPEED LIMIT SIGNS SHALL BE INSTALLED AT A MAXIMUM OF 1MILE INTERVALS. AT THE END OF THE WORK AREA A R2-1(XX) SHALL BE INSTALLED TO MATCH ORIGINAL SPEED LIMIT.
4. THE MAXIMUM SPACING BETWEEN CHANNELIZING DEVICES IN A TAPER SHOULD BE APPROXIMATELY EQUAL IN FEET TO THE SPEED LIMIT. BEYOND THE TAPER, MAXIMUM SPACING SHALL BE TWO TIMES THE SPEED LIMIT, OR AS DIRECTED BY THE ENGINEER.
5. WARNING LIGHTS AND/OR FLAGS MAY BE MOUNTED TO SIGNS OR CHANNELIZING DEVICES AT NIGHT AS NEEDED.
6. PAVEMENT MARKINGS NO LONGER APPLICABLE WHICH MIGHT CREATE CONFUSION IN THE MINDS OF VEHICLE OPERATORS SHALL BE REMOVED OR OBLITERATED AS SOON AS PRACTICABLE.
7. TRAILER MOUNTED DEVICES SUCH AS ARROW PANELS AND PORTABLE CHANGEABLE MESSAGE SIGNS SHALL BE DELINEATED BY AFFIXING CONSPICUITY MATERIAL IN A CONTINUOUS LINE ON THE FACE OF THE TRAILER. WHEN PLACED ON OR ADJACENT TO THE SHOULDER AND NOT BEHIND A POSITIVE BARRIER, THESE DEVICES SHALL BE DELINEATED BY PLACING FIVE (5) TRAFFIC DRUMS, EQUALLY SPACED ALONG THE TRAFFIC SIDE OF THE DEVICE. PAYMENT FOR TRAFFIC DRUMS SHALL BE CONSIDERED INCLUDED IN THE PRICE BID FOR VARIOUS TRAILER MOUNTED DEVICES.
8. DIMENSIONS SHOWN FOR RAISED PAVEMENT MARKERS ARE TYPICAL. THE CONTRACTOR MAY SUBSTITUTE SIMILAR MARKERS WITH THE APPROVAL OF THE ENGINEER. REQUESTING APPROVAL FOR SIMILAR MARKERS MAY BE MADE BY REFERRING TO THE ARDOT QUALIFIED PRODUCTS LIST.
9. ALL TRAILER MOUNTED DEVICES SUCH AS ARROW PANELS AND PORTABLE CHANGEABLE MESSAGE SIGNS SHALL MEET THE REQUIREMENTS OF THE MANUAL FOR ASSESSING SAFETY HARDWARE (MASH).

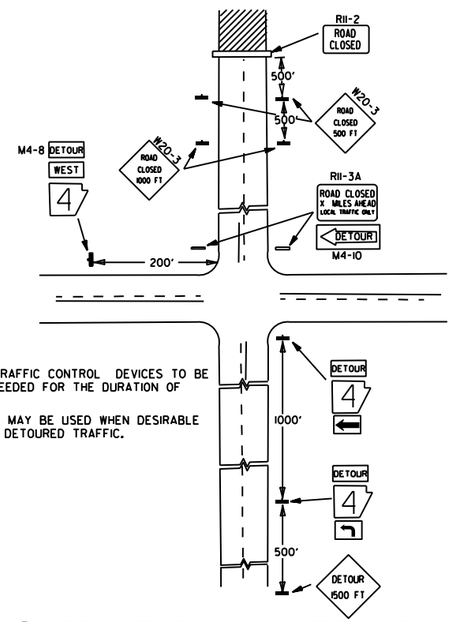

NOTES:
1. REGULATORY TRAFFIC CONTROL DEVICES TO BE MODIFIED AS NEEDED FOR THE DURATION OF THE DETOUR.
2. STREET NAMES MAY BE USED WHEN DESIRABLE FOR DIRECTING DETOURED TRAFFIC.

(D) TYPICAL APPLICATION - ROADWAY CLOSED BEYOND DETOUR POINT.

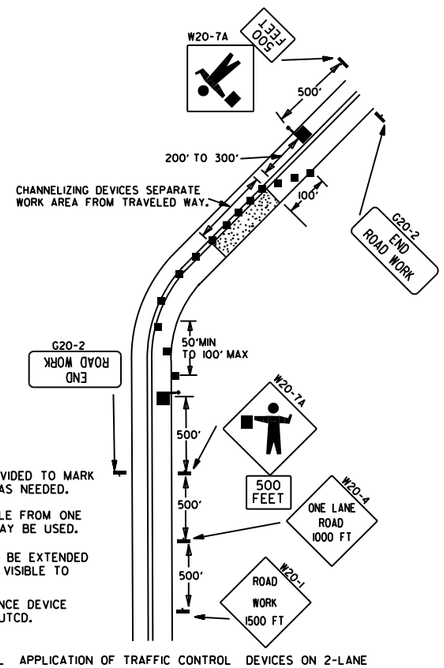

NOTES:
1. FLOOD LIGHTS SHOULD BE PROVIDED TO MARK FLAGGER STATIONS AT NIGHT AS NEEDED.
2. IF ENTIRE WORK AREA IS VISIBLE FROM ONE STATION, A SINGLE FLAGGER MAY BE USED.
3. CHANNELIZING DEVICES ARE TO BE EXTENDED TO A POINT WHERE THEY ARE VISIBLE TO APPROACHING TRAFFIC.
4. AUTOMATED FLAGGER ASSISTANCE DEVICE (AFAD) OPTIONAL. REFER TO MUTCD.

(E) TYPICAL APPLICATION OF TRAFFIC CONTROL DEVICES ON 2-LANE HIGHWAY WHERE ONE LANE IS CLOSED AND FLAGGING IS PROVIDED.

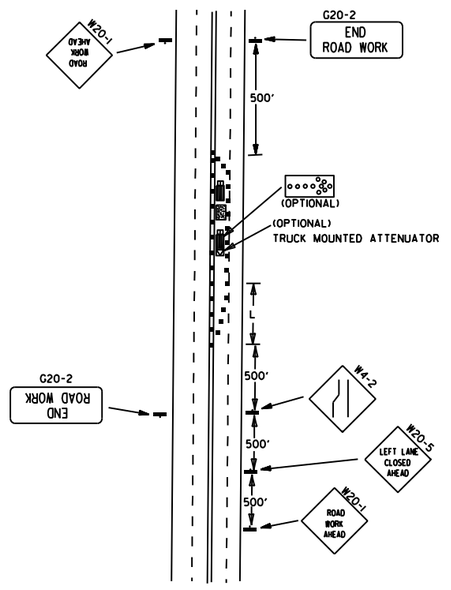

(F) TYPICAL APPLICATION - 4-LANE UNDIVIDED ROADWAY WITH INSIDE LANE CLOSED.

DATE	REVISION	FILMED
05-20-21	REVISED NOTE 7	
11-07-19	REVISED NOTE 1, ADDED NOTE 9	
9-2-15	REVISED NOTE 2, ADDED NOTE 8, REVISED DRAWING (A) & REPLACED R2-5A WITH W3-5	
9-12-13	REVISED DETAIL OF RAISED PAVEMENT MARKERS	
3-11-10	ADDED (AFAD)	
11-20-08	REVISED SIGN DESIGNATIONS	
11-18-04	ADDED GENERAL NOTE	
10-18-96	ADDED R55-1	
4-26-96	CORRECTED (c) BEHIND G20-2	
6-8-95	CORRECTED SIGN IDENT. ON W1-4A	6-8-95
2-2-95	REVISED PER PART VI, MUTCD, SEPT. 3, 1993	
8-15-91	DRAWN AND PLACED IN USE	

ARKANSAS STATE HIGHWAY COMMISSION

STANDARD TRAFFIC CONTROLS FOR HIGHWAY CONSTRUCTION

STANDARD DRAWING TC-2

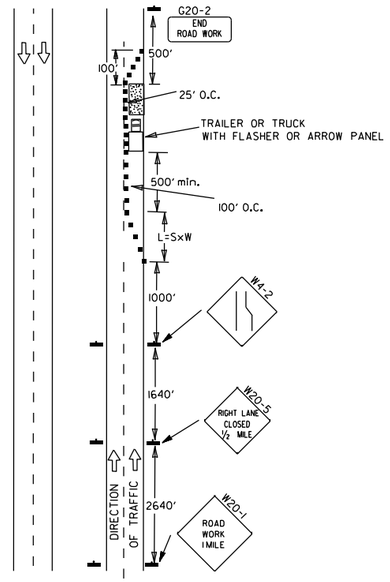

(A) TYPICAL APPLICATION - DAYTIME MAINTENANCE OPERATIONS OF SHORT DURATION ON A 4-LANE DIVIDED ROADWAY WHERE HALF OF THE ROADWAY IS CLOSED.

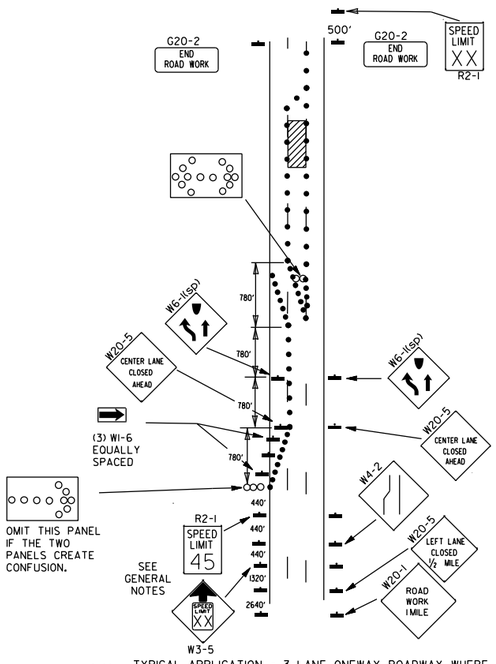

(B) TYPICAL APPLICATION - 3-LANE ONEWAY ROADWAY WHERE CENTER LANE IS CLOSED.

KEY:

- ARROW PANEL (IF REQUIRED)
- ■ CHANNELIZING DEVICE
- ● TRAFFIC DRUM

GENERAL NOTES:

1. A SPEED LIMIT REDUCTION MAY BE IMPLEMENTED ONLY WHEN DESIGNATED IN THE PLAN OR WHEN RECOMMENDED BY THE ROADWAY DESIGN DIVISION.
2. WHEN THE EXISTING SPEED LIMIT IS 55MPH AND THE PLANS REQUIRE A SPEED LIMIT OF 45MPH, THE R2-1(55) SHALL BE OMITTED AND THE W3-5 SHALL BE INSTALLED AT THAT LOCATION. ADDITIONAL R2-1 45MPH SPEED LIMIT SIGNS SHALL BE INSTALLED AT A MAXIMUM OF 1MILE INTERVALS. AT THE END OF THE WORK AREA A R2-1(XX) SHALL BE INSTALLED TO MATCH ORIGINAL SPEED LIMIT.
3. WHEN THE EXISTING SPEED LIMIT IS 65MPH AND THE PLANS REQUIRE A SPEED LIMIT OF 55MPH, THE R2-1(45) SHALL BE OMITTED. ADDITIONAL R2-155MPH SPEED LIMIT SIGNS SHALL BE INSTALLED AT A MAXIMUM OF 1MILE INTERVALS. AT THE END OF THE WORK AREA A R2-1(XX) SHALL BE INSTALLED TO MATCH ORIGINAL SPEED LIMIT.
4. THE MAXIMUM SPACING BETWEEN CHANNELIZING DEVICES IN A TAPER SHOULD BE APPROXIMATELY EQUAL IN FEET TO THE SPEED LIMIT. BEYOND THE TAPER, MAXIMUM SPACING SHALL BE TWO TIMES THE SPEED LIMIT OR AS DIRECTED BY THE ENGINEER.
5. WARNING LIGHTS AND/OR FLAGS MAY BE MOUNTED TO SIGNS OR CHANNELIZING DEVICES AT NIGHT AS NEEDED.
6. PAVEMENT MARKINGS NO LONGER APPLICABLE WHICH MIGHT CREATE CONFUSION IN THE MINDS OF VEHICLE OPERATORS SHALL BE REMOVED OR OBLITERATED AS SOON AS PRACTICABLE.
7. THE G20-1 SIGN WILL BE REQUIRED ON JOBS OF OVER TWO MILES IN LENGTH. WHEN THE LANE CLOSURE IS NOT AT THE BEGINNING OF THE PROJECT, THE G20-1 SIGN SHALL BE ERECTED 125' IN ADVANCE OF THE JOB LIMIT. ADDITIONAL W20-1(1MILE) SIGNS ARE NOT REQUIRED IN ADVANCE OF LANE CLOSURES THAT BEGIN INSIDE THE PROJECT LIMITS.
8. FLAGGERS SHALL USE STOP/SLOW PADDLES FOR CONTROLLING TRAFFIC THROUGH WORK ZONES. FLAGS MAY BE USED ONLY FOR EMERGENCY SITUATIONS.
9. ALL PLASTIC DRUMS AND CONES SHALL MEET THE REQUIREMENTS OF MANUAL FOR ASSESSING SAFETY HARDWARE (MASH).
10. TRAILER MOUNTED DEVICES SUCH AS ARROW PANELS AND PORTABLE CHANGEABLE MESSAGE SIGNS SHALL BE DELINEATED BY AFFIXING CONSPICUITY MATERIAL IN A CONTINUOUS LINE ON THE FACE OF THE TRAILER. WHEN PLACED ON OR ADJACENT TO THE SHOULDER AND NOT BEHIND A POSITIVE BARRIER, THESE DEVICES SHALL BE DELINEATED BY PLACING FIVE (5) TRAFFIC DRUMS, EQUALLY SPACED ALONG THE TRAFFIC SIDE OF THE DEVICE. PAYMENT FOR TRAFFIC DRUMS SHALL BE CONSIDERED INCLUDED IN THE PRICE BID FOR VARIOUS TRAILER MOUNTED DEVICES.
11. ALL TRAILER MOUNTED DEVICES SUCH AS ARROW PANELS AND PORTABLE CHANGEABLE MESSAGE SIGNS SHALL MEET THE REQUIREMENTS OF THE MANUAL FOR ASSESSING SAFETY HARDWARE (MASH).

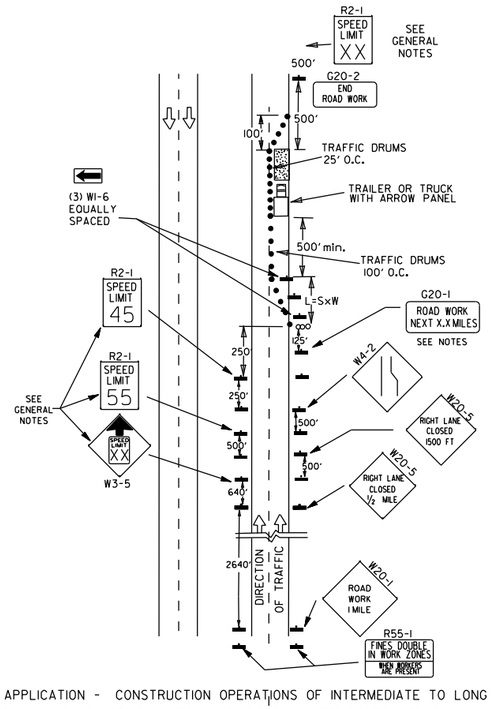

(C) TYPICAL APPLICATION - CONSTRUCTION OPERATIONS OF INTERMEDIATE TO LONG TERM DURATION ON A 4-LANE DIVIDED ROADWAY WHERE HALF OF THE ROADWAY IS CLOSED.

CHANNELIZING DEVICES

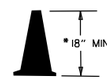

* WHEN CONES ARE USED ON FREEWAYS AND MULTI-LANE HIGHWAYS, THEY SHALL BE 28" MIN. DURING HOURS OF DARKNESS. 28" CONES SHALL BE USED ON ALL ROADWAYS, AND SHALL BE REFLECTORIZED IN ACCORDANCE WITH THE M.U.T.C.D.

CONES

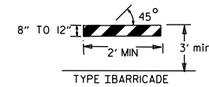

TYPE IBARRICADE

PLASTIC DRUM

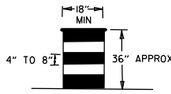

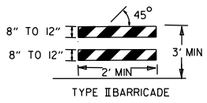

TYPE IIBARRICADE

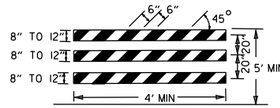

TYPE IIIBARRICADE

NOTE:
FOR ALL ROAD CLOSURES, THE TYPE III BARRICADES SHALL BE OF SUFFICIENT LENGTH TO EXTEND ACROSS ENTIRE ROADWAY.

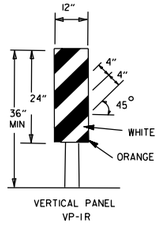

VERTICAL PANEL
VP-1R

VERTICAL PANEL PLACEMENT

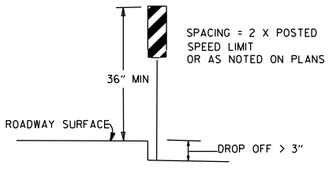

FLAG

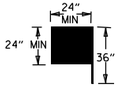

FLAG SHALL BE OF GOOD GRADE RED MATERIAL

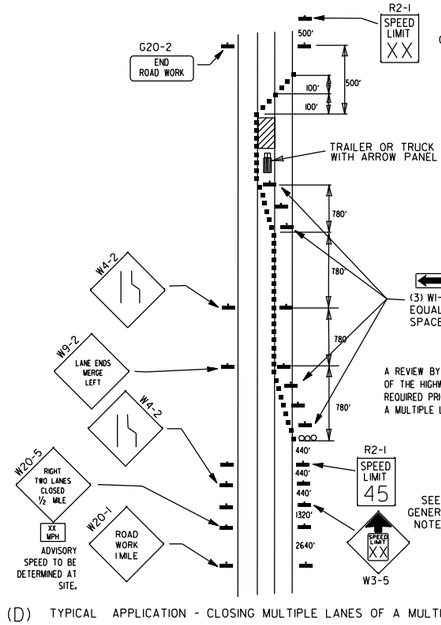

A REVIEW BY THE ROADWAY DESIGN DIVISION OF THE HIGHWAY DEPARTMENT WILL BE REQUIRED PRIOR TO IMPLEMENTING A MULTIPLE LANE CLOSURE.

(D) TYPICAL APPLICATION - CLOSING MULTIPLE LANES OF A MULTILANE HIGHWAY.

TRAFFIC CONTROL DEVICES

NON-INTERSTATE			
VERTICAL DIFFERENTIAL	LOCATION	TRAFFIC CONTROL	
		≤ 45 MPH	> 45 MPH
≤ 1"	CENTERLINE	W8-11	W8-11
> 1" ≤ 3"	CENTERLINE	W8-11 AND CENTERLINE LANE STRIPING	W8-11 AND CENTERLINE LANE STRIPING
> 3"	CENTERLINE	STANDARD LANE CLOSURE[6]	STANDARD LANE CLOSURE[6]
≤ 3"	EDGE OF TRAVELED LANE OR EDGE OF SHOULDER	W8-9 AND TRAFFIC DRUMS[1]	W8-9 AND TRAFFIC DRUMS[1]
> 3" ≤ 6"	EDGE OF TRAVELED LANE OR EDGE OF SHOULDER	W8-17, EDGE LINE STRIPING, AND TRAFFIC DRUMS[1]	W8-17, EDGE LINE STRIPING, AND TRAFFIC DRUMS[1]
> 6" ≤ 18"	EDGE OF TRAVELED LANE OR EDGE OF SHOULDER	W8-17, EDGE LINE STRIPING, AND TRAFFIC DRUMS[1]	W8-17, EDGE LINE STRIPING, AND TRAFFIC DRUMS[2]
> 18" ≤ 24"	EDGE OF TRAVELED LANE OR EDGE OF SHOULDER	W8-17, EDGE LINE STRIPING, AND TRAFFIC DRUMS[1]	A STABILIZED WEDGE, W8-17, EDGE LINE STRIPING AND TRAFFIC DRUMS[5]
> 24"	EDGE OF TRAVELED LANE OR EDGE OF SHOULDER	PRECAST CONCRETE BARRIER[4] & EDGE LINES	PRECAST CONCRETE BARRIER[4] & EDGE LINES

INTERSTATE		
VERTICAL DIFFERENTIAL	LOCATION	TRAFFIC CONTROL
≤ 3"	CENTERLINE	W8-11 AND LANE STRIPING
≤ 3"	EDGE OF TRAVELED LANE OR EDGE OF SHOULDER	W8-9, EDGE LINE STRIPING, AND TRAFFIC DRUMS[2]
> 3" ≤ 6"	EDGE OF TRAVELED LANE OR EDGE OF SHOULDER	W8-17, EDGE LINE STRIPING, AND TRAFFIC DRUMS[2]
> 6"	EDGE OF TRAVELED LANE OR EDGE OF SHOULDER	PRECAST CONCRETE BARRIER & EDGE LINES

INTERSTATE AND NON-INTERSTATE		
FORESLOPE	HEIGHT	TRAFFIC CONTROL
1:1	> 2 FT	PRECAST CONCRETE BARRIER
2:1	≤ 5 FT	TRAFFIC DRUMS
2:1	> 5 FT	PRECAST CONCRETE BARRIER
Flatter than 2:1	N/A	TRAFFIC DRUMS

GENERAL NOTES:

1. WHEN THE SHOULDER AREA IS USED AS PART OF THE TRAVELED LANE AND THERE IS INSUFFICIENT WIDTH TO PLACE TRAFFIC DRUMS ON THE REMAINING SHOULDER WIDTH, THEN VERTICAL PANELS SHALL BE USED.
2. WHEN THERE IS INSUFFICIENT WIDTH TO PLACE TRAFFIC DRUMS ON THE REMAINING SHOULDER WIDTH, A STABILIZED WEDGE SHALL BE USED.
3. PRECAST CONCRETE BARRIER WALL CAN BE USED IN LIEU OF A STABILIZED WEDGE, W8-17 SIGN, EDGE LINE STRIPING, AND TRAFFIC DRUMS, IF AND WHERE DIRECTED BY THE ENGINEER.
4. A STABILIZED WEDGE, W8-17 SIGN, EDGE LINE STRIPING, AND TRAFFIC DRUMS CAN BE USED IN LIEU OF PRECAST CONCRETE BARRIER WALL, IF AND WHERE DIRECTED BY THE ENGINEER.
5. W21-5, W21-5a, AND/OR W21-5b SIGNS SHALL BE USED WHERE THE ROADWAY IS UNOBSTRUCTED IF AND WHERE DIRECTED BY THE ENGINEER.
6. TIME LIMITATIONS MUST CONFORM TO SECTION 603 OF THE STANDARD SPECIFICATIONS FOR HIGHWAY CONSTRUCTION (CURRENT EDITION).

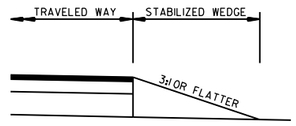

STABILIZED WEDGE

NOTE:
MATERIALS FOR THE STABILIZED WEDGE SHALL MEET THE REQUIREMENTS PROVIDED IN SECTION 603.02 OF THE STANDARD SPECIFICATIONS.

STOP SLOW PADDLE

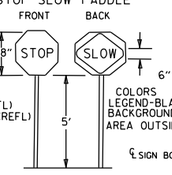

NOTES: USE SPLICES ONLY WHEN NECESSARY FOR INSTALLATION. TYPICAL INSTALLATION SHOULD HAVE NO SPLICES (SEE STD. DRAWING NO. SHS-21)

NORMAL INSTALLATIONS WILL REQUIRE 1/4" DIA. BOLTS TO MOUNT SIGNS TO POST AND 5/16" DIA. BOLTS TO ASSEMBLE THE VARIOUS POST SUPPORTS. EACH OF THESE BOLTS SHALL BE CARRIAGE BOLTS.

SIGN POSTS SHALL BE PAINTED GREEN; SIGNS SHALL NOT BE PAINTED, AND ALL SIGN POSTS SHALL BE PLUMB.

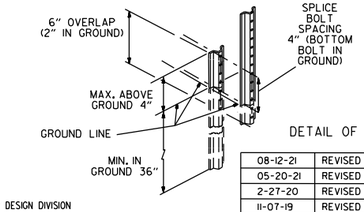

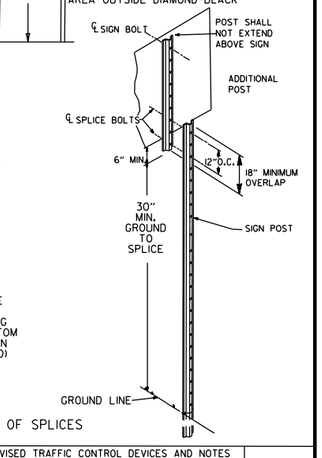

DETAIL OF SPLICES

DATE	REVISION	FILMED
08-12-21	REVISED TRAFFIC CONTROL DEVICES AND NOTES	
05-20-21	REVISED NOTE 10	
2-27-20	REVISED TRAFFIC CONTROL DEVICES DETAILS	
11-07-19	REVISED NOTE 9, ADDED NOTE 11	
7-25-19	REVISED TRAFFIC CONTROL DEVICES DETAILS	
9-2-15	REVISED NOTE 2 & REPLACED R2-5A WITH W3-5	
10-15-09	ADDED REFERENCE TO MASH	
11-20-08	REVISED SIGN DESIGNATIONS	
11-18-04	ADDED NOTE	
10-1-98	ADDED NOTE	
4-03-97	ADDED (SP) TO W6-1& REVISED TRAFFIC CONTROL DEVICES NOTE	
10-18-96	ADDED R55-1	
10-12-95	MOVED UPPER SPLICE	
6-8-95	REVISED SPLICE DETAIL, TEXT	6-8-95
2-2-95	REVISED PER PART VI, MUTCD, SEPT. 3, 1993	
8-15-91	DRAWN AND PLACED IN USE	

ARKANSAS STATE HIGHWAY COMMISSION

STANDARD TRAFFIC CONTROLS FOR HIGHWAY CONSTRUCTION

STANDARD DRAWING TC-3

REINFORCING BAR TABLE PER BARRIER UNIT

MARK	LOCATION	BAR SIZE	(NO. BARS)	SKETCH
H-1	HORIZONTAL IN BARRIER TIED INSIDE V-1 BARS	#5	(6)	19'-3"
H-2	CENTERED ABOVE DRAIN SLOTS LONG. & TRANSVERSELY	#5	(6)	6'-6"
H-3	TIED ABOVE H-1 BARS TO SUPPORT H-2. TIED TO V-1	#4	(2)	1'-6"
S-1	OVER LIFT HOLES	#4	(2)	2'-5", LIFTING HOLE, 90°, 3 3/8" R
S-2	HORIZ. AROUND SLOTS BETWEEN V-1'S @ DRAIN SLOTS	#4	(2)	1 1/2" R, SLOTS, 7", 1'-6", 1" MIN. CLEAR TO BAR, 5'-1" BAR W/(4) 1 1/2" R BENDS & MIN. 1'-0" OVERLAP
V-1	VERTICAL IN BARRIER(3) EACH END & (2) AT EACH DRAIN SLOTS	#5	(16)	TOTAL LENGTH 4'-9", 2 3/16" R, 12°, 9 1/2", 2'-1 3/8", 4 3/8"

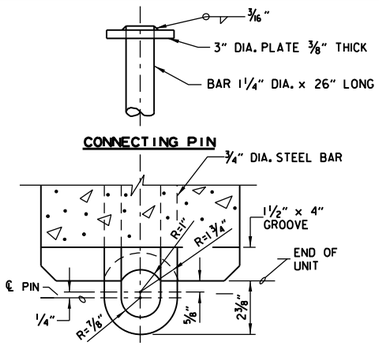

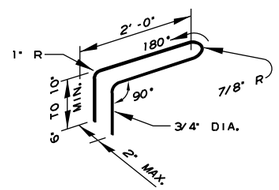

CONNECTION LOOP

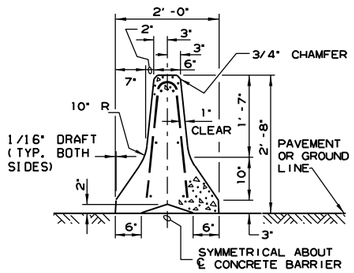

SECTION A-A

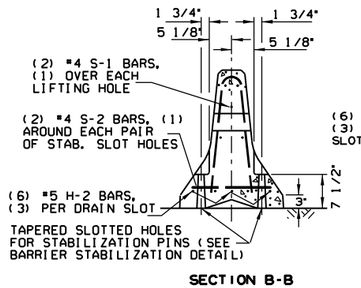

SECTION B-B

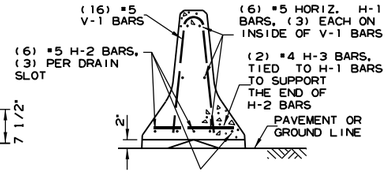

SECTION C-C

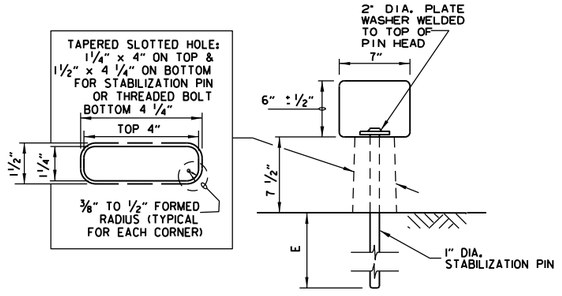

BARRIER STABILIZATION DETAIL

ROADWAY SECTION

(E) 4" - CONCRETE PAVEMENT
8" - ASPHALT PAVEMENT
12" - SHOULDER AREAS

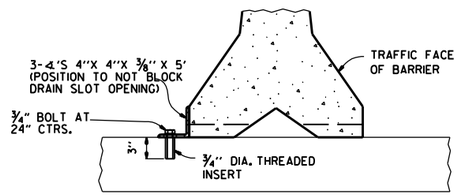

NOTE: " THREADED INSERTS SHALL BE CAST IN PLACE FOR ALL NEW BRIDGE DECKS AND DRILLED AND GROUTED FOR EXISTING BRIDGE DECKS. INSERTS SHALL HAVE A MINIMUM ULTIMATE LOAD CAPACITY OF 8000 LBS. IN TENSION. AFTER REMOVAL OF BARRIER, BOLTS, AND ANGLES, THE INSERTS SHALL BE FILLED WITH APPROVED NON-SHRINK EPOXY.

BARRIER STABILIZATION DETAIL

BRIDGE DECKS

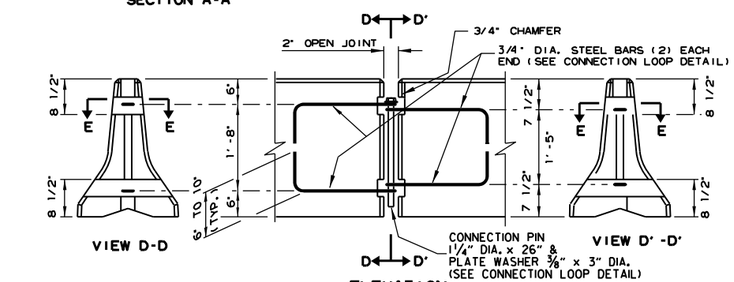

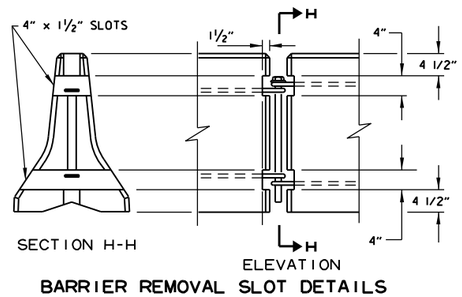

BARRIER REMOVAL SLOT DETAILS

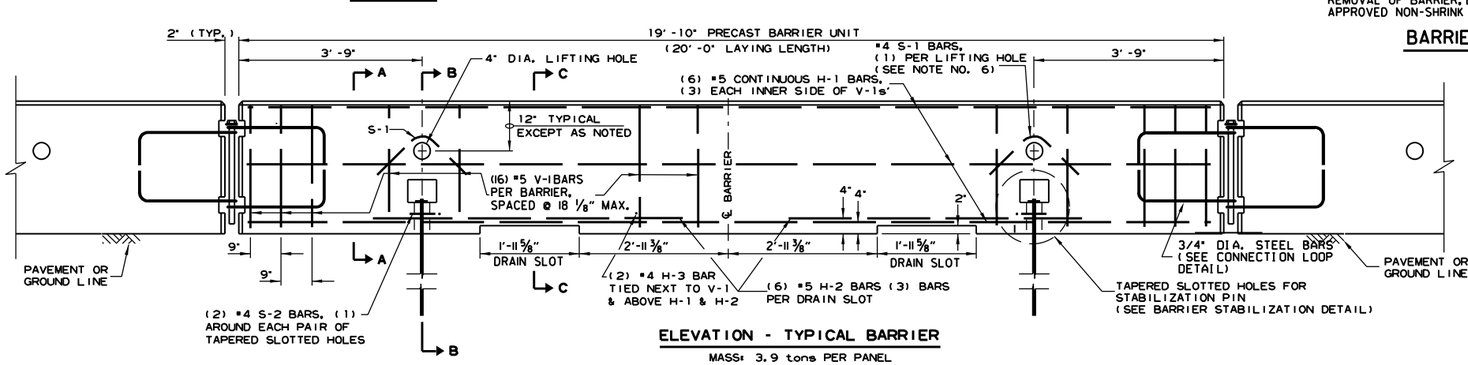

ELEVATION - TYPICAL BARRIER

MASS: 3.9 tons PER PANEL

GENERAL NOTES

(1) THE CONTRACTOR SHALL FURNISH THE PRECAST CONCRETE BARRIER UNITS AND SHALL BE RESPONSIBLE FOR THE MANUFACTURE, SHIPMENT, STORAGE, PLACEMENT AND REMOVAL. AT THE COMPLETION OF THE PROJECT, THE PRECAST UNITS WILL REMAIN THE PROPERTY OF THE CONTRACTOR.

(2) MATERIALS SHALL MEET THE FOLLOWING MINIMUM REQUIREMENTS:
CONCRETE: 2500 PSICOMPRESSIVE STRENGTH AT 28 DAYS.
REINFORCING STEEL: AASHTO M 31 OR M 53, GRADE 60
STRUCTURAL STEEL: AASHTO-M270 GRADE 36 SHALL BE USED FOR THE CONNECTION PIN, CONNECTION LOOPS, AND STABILIZATION PINS. A ONE PIECE PIN WITH A 3" ROUNDED TOP MAY BE USED IN PLACE OF THE DETAILED CONNECTION PIN.
DELINEATORS: DELINEATORS SHALL BE MOUNTED AT 10' SPACING ON TOP OF PRECAST BARRIER.

IN APPLICATIONS WHERE BARRIER WALL IS WITHIN 6 FEET OF A TRAFFIC LANE, ADDITIONAL DELINEATORS SHALL BE PLACED ON THE BARRIER AT 10' SPACING APPROXIMATELY ONE (1) FOOT FROM THE TOP OF THE BARRIER. DELINEATORS SHALL BE ON THE ARDOT QUALIFIED PRODUCTS LIST FOR CONSTRUCTION CONCRETE BARRIER MARKERS.
DELINEATOR COLOR SHALL BE IN ACCORDANCE WITH THE MANUAL ON UNIFORM TRAFFIC CONTROL DEVICES.
PAYMENT FOR DELINEATORS SHALL BE CONSIDERED INCLUDED IN THE PRICE BID PER LIN. FT. FOR "FURNISHING AND INSTALLING PRECAST CONCRETE BARRIER". THE CONTRACTOR SHALL CERTIFY TO THE ENGINEER THAT THE MATERIAL AND THE DESIGN USED IN THE PRECAST BARRIER UNITS MEETS THE REQUIREMENTS AS SHOWN ON THIS STANDARD DRAWING.

(3) OTHER PRECAST CONCRETE BARRIERS THAT HAVE BEEN CRASH TESTED AND APPROVED BY THE FEDERAL HIGHWAY ADMINISTRATION TO MEET THE REQUIREMENTS OF MANUAL FOR ASSESSING SAFETY HARDWARE (MASH) WILL BE ACCEPTED IN LIEU OF THE BARRIER SHOWN. DRAIN SLOTS SHALL BE PROVIDED AS NEEDED OR AS DIRECTED BY THE ENGINEER. THE CONTRACTOR SHALL FURNISH A CERTIFICATION OF MANUAL FOR ASSESSING SAFETY HARDWARE (MASH) COMPLIANCE FOR ANY OTHER TYPES OF PRECAST BARRIER TO BE USED. THE CERTIFICATION SHALL STATE THAT THE PRECAST CONCRETE BARRIER MEETS THE REQUIREMENTS OF MANUAL FOR ASSESSING SAFETY HARDWARE (MASH). MIXING OF SHAPES WILL NOT BE ALLOWED IN A CONTINUOUS LINE OF UNITS.

(4) DOWEL HOLES IN PAVEMENT OR BRIDGE SLABS THAT ARE TO REMAIN IN PLACE SHALL BE FILLED. HOLES IN CONCRETE PAVEMENT AND BRIDGE SLABS SHALL BE FILLED WITH AN APPROVED NON-SHRINK EPOXY GROUT. HOLES IN ASPHALT PAVEMENT SHALL BE FILLED WITH AN APPROVED ASPHALT JOINT FILLER. PAYMENT FOR DRILLING AND FILLING HOLES TO BE INCLUDED IN THE PRICE FOR VARIOUS BARRIER ITEMS.

(5) ATTACH UNITS TO ROADWAY SURFACE WITH STABILIZATION PINS AND TO DECK SLABS USING BOLTS WHEN REQUIRED.

(6) A 4" WHITE PVC SLEEVE MAY BE USED TO FORM THE LIFTING HOLE AND IF USED THE SLEEVE IS TO BE LEFT IN PLACE.

DATE	REVISION	FILMED
11-07-19	REVISED NOTE 3	
2-27-14	REVISED BARRIER STABILIZATION DETAIL	
10-15-09	ADDED REFERENCE TO MASH	
8-5-09	REV. NOTE 3 CONCERNING DRAIN SLOTS	
11-29-07	REVISED NOTE 3	
5-25-06	DELETED GENERAL NOTE 7	
11-18-04	REVISED BARRIER STABILIZATION DETAIL BRIDGE DECKS	
4-10-03	REVISED GENERAL NOTE 2	
8-22-02	ISSUED NEW DRAWING	

ARKANSAS STATE HIGHWAY COMMISSION

STANDARD TRAFFIC CONTROLS FOR HIGHWAY CONSTRUCTION - TEMPORARY PRECAST BARRIER

STANDARD DRAWING TC-4

Ⓐ 4 feet or greater preferred. If less than 4 feet, Precast Units shall be connected to slab (SEE BARRIER STABILIZATION DETAIL-BRIDGE DECKS STD. DRWG. TC-4)

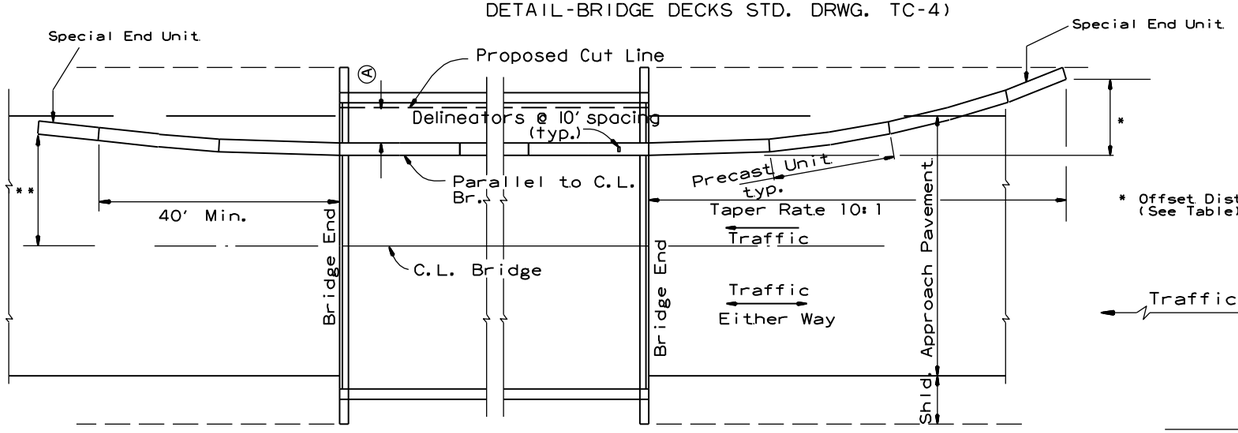

BARRIER PLACEMENT ALONG BRIDGE WITH OFFSET

No Scale

** Offset Distance for Two Way Traffic Only

* Offset Distance (See Table)

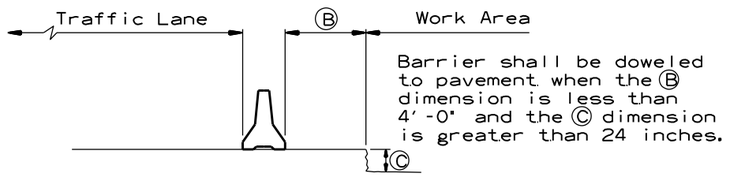

Barrier shall be doweled to pavement when the Ⓑ dimension is less than 4'-0" and the Ⓒ dimension is greater than 24 inches.

SECTION J-J

No Scale

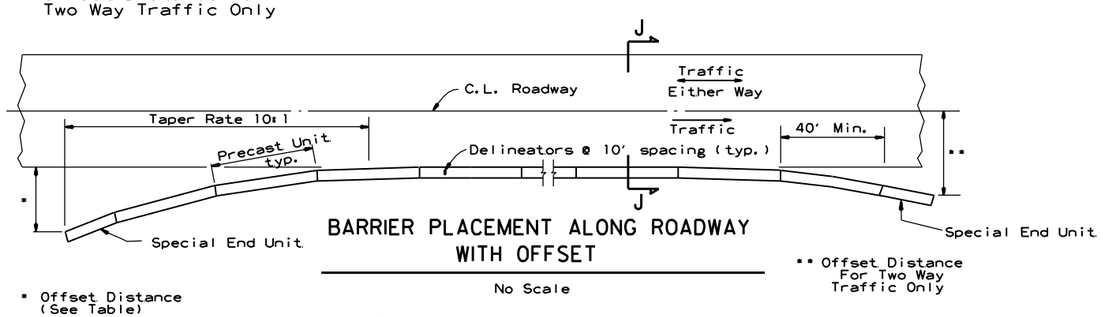

BARRIER PLACEMENT ALONG ROADWAY WITH OFFSET

No Scale

** Offset Distance For Two Way Traffic Only

* Offset Distance (See Table)

Offset Distance Table

Speed (MPH)	Offset Distance (FT.)
≤ 45	12
> 45	18

If offset distance is not attainable, then see "Barrier Placement With Attenuator" Detail shown below.

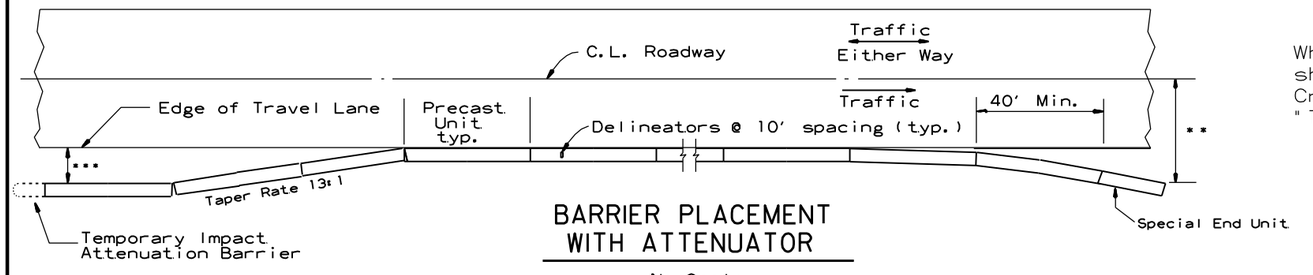

BARRIER PLACEMENT WITH ATTENUATOR

No Scale

*** Min. 3'-0" From Edge of Travel Lane to Nearest Edge of Attenuator

** Offset Distance For Two Way Traffic Only

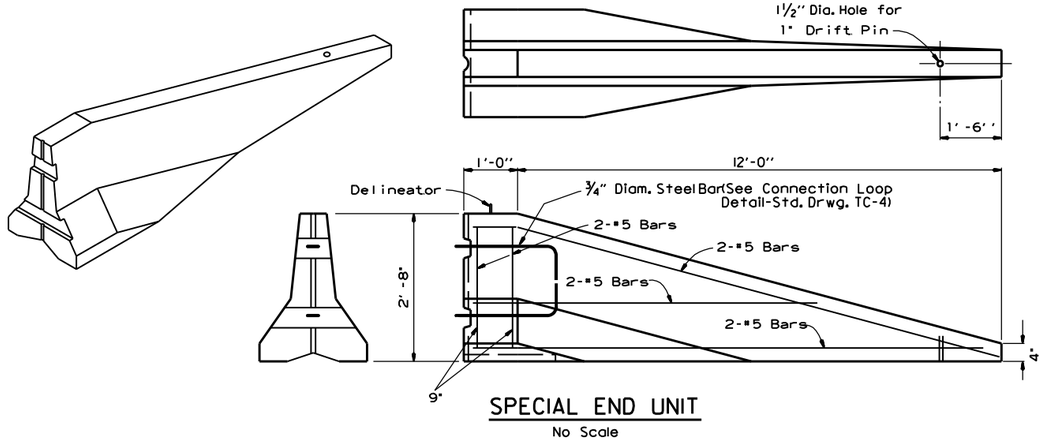

SPECIAL END UNIT

No Scale

General Notes

When shown on the Plans, the ends of the Temporary Precast Concrete Barrier shall be protected with a Manual For Assessing Safety Hardware (MASH) approved Crash Cushion. Payment for Crash Cushions shall be made under the item of "Temporary Impact Attenuation Barrier."

DATE	REVISION	FILMED
11-07-19	REVISED NOTE	
10-15-09	ADDED REFERENCE TO MASH	
5-25-06	REVISED BARRIER PLACEMENT	
8-22-02	ISSUED NEW DRAWING	

ARKANSAS STATE HIGHWAY COMMISSION

STANDARD TRAFFIC CONTROLS FOR HIGHWAY CONSTRUCTION - TEMPORARY PRECAST BARRIER

STANDARD DRAWING TC-5

GENERAL NOTES

INSTALL A MINIMUM OF 2 UPSLOPE STAKES AND 4 DOWNSLOPE STAKES AT AN ANGLE TO WEDGE WATTLE TO BOTTOM OF DITCH.

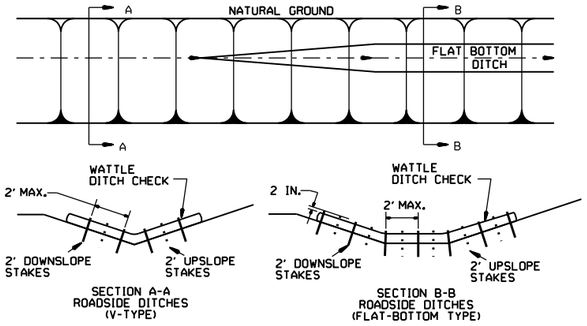

WATTLE DITCH CHECK (E-1)

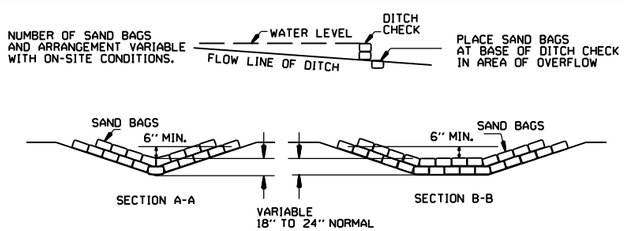

SAND BAG DITCH CHECK (E-5)

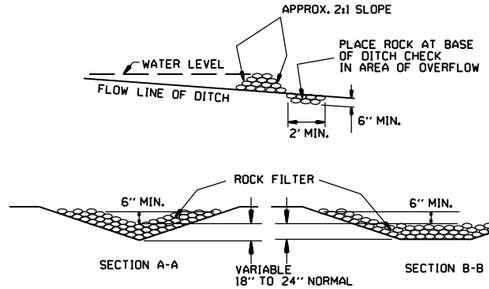

ROCK DITCH CHECK (E-6)

GENERAL NOTES

GEOTEXTILE FABRIC (TYPE 4) IN ACCORDANCE WITH SECTION 625

GEOTEXTILE FABRIC SHALL BE SPLICED TOGETHER WITH A SEWN SEAM ONLY AT A SUPPORT POST OR TWO SECTIONS OF FENCE MAY BE OVERLAPPED INSTEAD. PAYMENT OF ADDITIONAL MATERIAL FOR OVERLAP WILL NOT BE MADE.

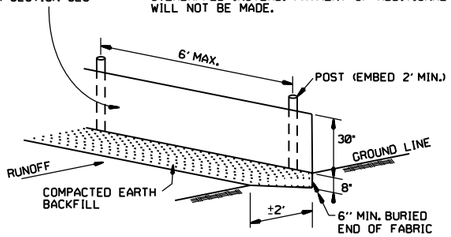

SILT FENCE (E-11)

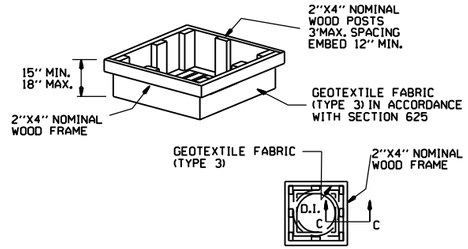

DROP INLET SILT FENCE (E-7)

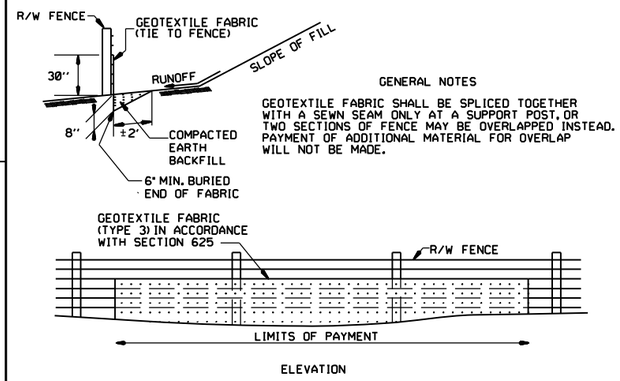

GENERAL NOTES

GEOTEXTILE FABRIC SHALL BE SPLICED TOGETHER WITH A SEWN SEAM ONLY AT A SUPPORT POST, OR TWO SECTIONS OF FENCE MAY BE OVERLAPPED INSTEAD. PAYMENT OF ADDITIONAL MATERIAL FOR OVERLAP WILL NOT BE MADE.

SILT FENCE ON R/W FENCE (E-4)

GENERAL NOTES

1. STRAW BALES SHALL BE INSTALLED SO THAT THE BINDINGS ARE ORIENTED AROUND THE SIDES RATHER THAN ALONG THE TOPS AND BOTTOMS OF THE BALES. THE BALES SHALL BE A MINIMUM OF 30 INCHES IN LENGTH.

2. NO GAPS SHALL BE LEFT BETWEEN BALES.

3. BALED STRAW FILTER BARRIERS COMPLETED AND ACCEPTED WILL BE MEASURED BY THE BALE IN PLACE AS AUTHORIZED BY THE ENGINEER AND WILL BE PAID FOR AT THE CONTRACT UNIT PRICE BID PER BALE FOR BALED STRAW DITCH CHECKS.

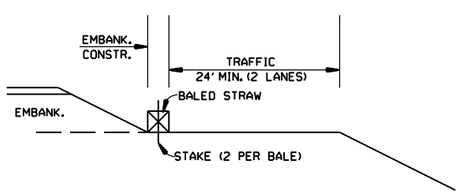

BALED STRAW FILTER BARRIER (E-2)

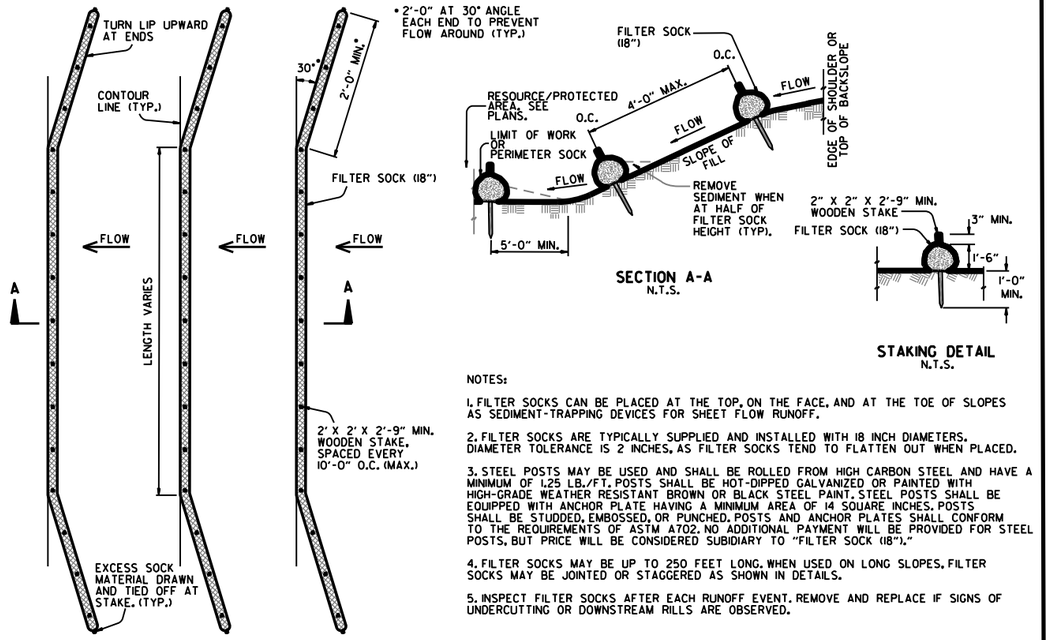

NOTES:

1. FILTER SOCKS CAN BE PLACED AT THE TOP, ON THE FACE, AND AT THE TOE OF SLOPES AS SEDIMENT-TRAPPING DEVICES FOR SHEET FLOW RUNOFF.

2. FILTER SOCKS ARE TYPICALLY SUPPLIED AND INSTALLED WITH 18 INCH DIAMETERS. DIAMETER TOLERANCE IS 2 INCHES, AS FILTER SOCKS TEND TO FLATTEN OUT WHEN PLACED.

3. STEEL POSTS MAY BE USED AND SHALL BE ROLLED FROM HIGH CARBON STEEL AND HAVE A MINIMUM OF 1.25 LB./FT. POSTS SHALL BE HOT-DIPPED GALVANIZED OR PAINTED WITH HIGH-GRADE WEATHER RESISTANT BROWN OR BLACK STEEL PAINT. STEEL POSTS SHALL BE EQUIPPED WITH ANCHOR PLATE HAVING A MINIMUM AREA OF 14 SQUARE INCHES. POSTS SHALL BE STUDDED, EMBOSSED, OR PUNCHED. POSTS AND ANCHOR PLATES SHALL CONFORM TO THE REQUIREMENTS OF ASTM A702. NO ADDITIONAL PAYMENT WILL BE PROVIDED FOR STEEL POSTS, BUT PRICE WILL BE CONSIDERED SUBIDIARY TO "FILTER SOCK (18")."

4. FILTER SOCKS MAY BE UP TO 250 FEET LONG. WHEN USED ON LONG SLOPES, FILTER SOCKS MAY BE JOINTED OR STAGGERED AS SHOWN IN DETAILS.

5. INSPECT FILTER SOCKS AFTER EACH RUNOFF EVENT. REMOVE AND REPLACE IF SIGNS OF UNDERCUTTING OR DOWNSTREAM RILLS ARE OBSERVED.

FILTER SOCK ALONG SLOPE (E-3)

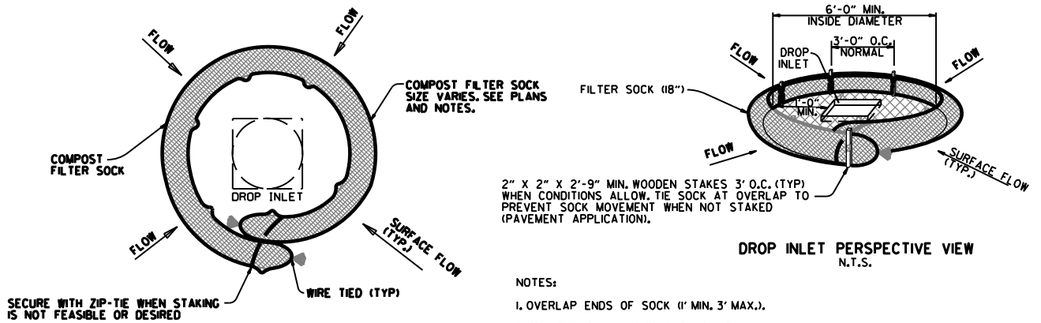

NOTES:

1. OVERLAP ENDS OF SOCK (1' MIN. 3' MAX.).

2. USE 18" DIA. SOCK IN NON-TRAFFIC AREAS OR AREAS WHERE SAFETY IS NOT A CONCERN.

COMPOST FILTER SOCK DROP INLET PROTECTION (E-13)

DATE	REVISION	FILMED
11-16-17	ADDED FILTER SOCK E-3 AND E-13	
12-15-11	DELETED BALED STRAW DITCH CHECK & ADDED WATTLE DITCH CHECK	
11-18-98	ADDED NOTES	
07-02-98	ADDED BALED STRAW FILTER BARRIER (E-2)	
07-20-95	REVISED SILT FENCE E-4 AND E-11	7-20-95
07-15-94	REV. E-4 & E-11 MIN. 13" BURIED END OF FABRIC	
06-02-94	REVISED E-1,4,7 & 11; DELETED E-2 & 3	6-2-94
04-01-93	REDRAWN	
10-01-92	REDRAWN	
08-02-76	ISSUED R.D.M.	298-7-28-76

ARKANSAS STATE HIGHWAY COMMISSION

TEMPORARY EROSION CONTROL DEVICES

STANDARD DRAWING TEC-1

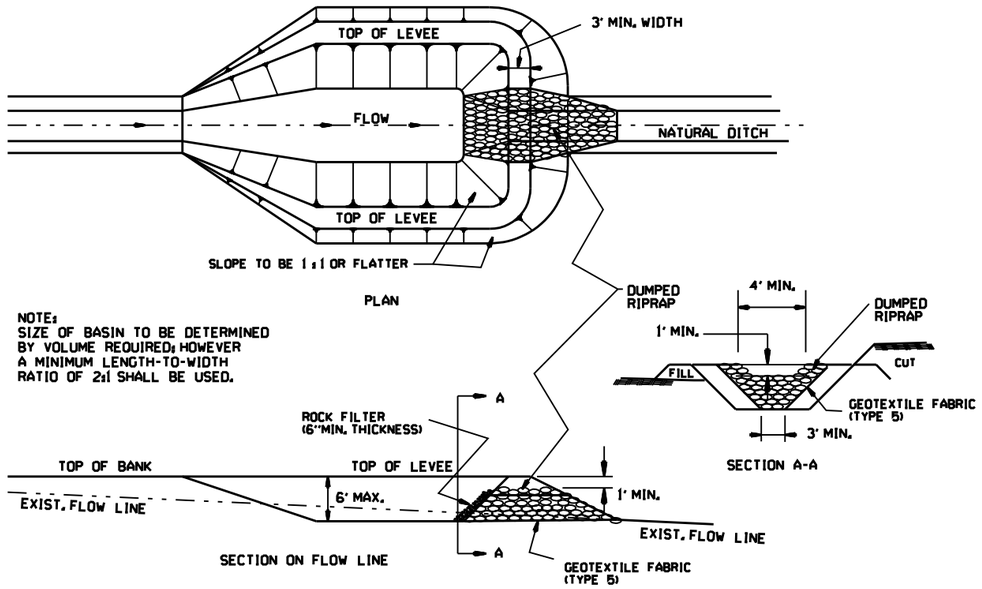

SEDIMENT BASIN WITH RIPRAP OUTLET (E-9)

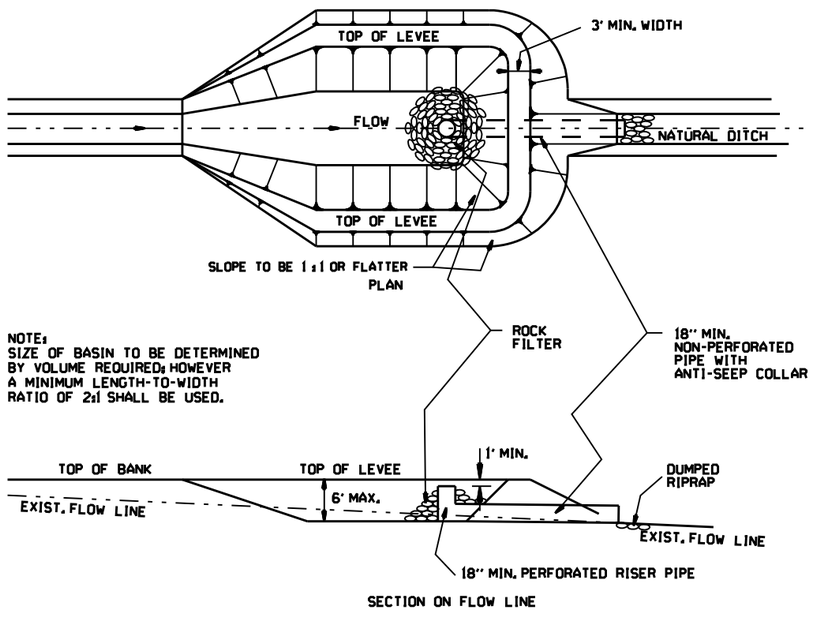

SEDIMENT BASIN WITH PIPE OUTLET (E-10)

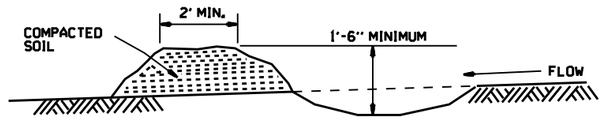

DIVERSION DITCH (E-8)

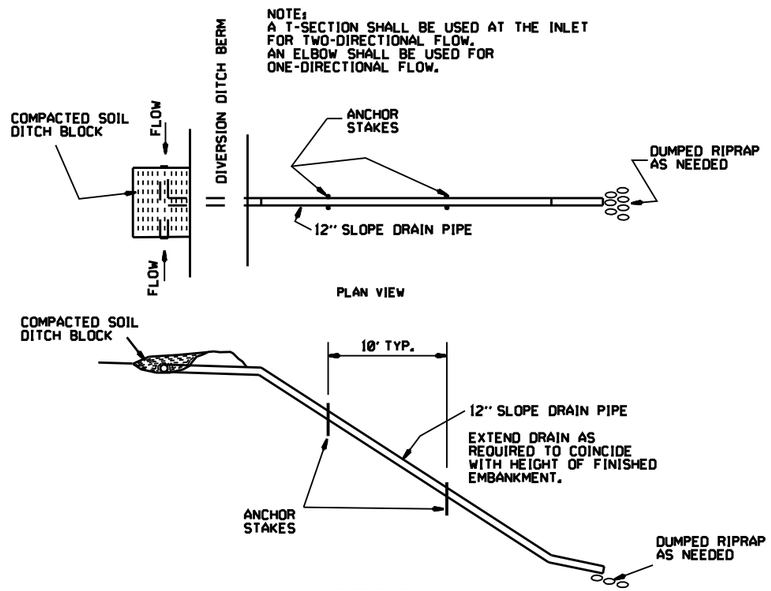

SLOPE DRAIN (E-12)

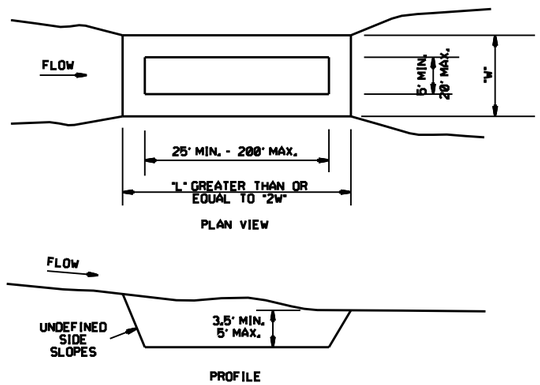

SEDIMENT BASIN (E-14)

DATE	REVISION	FILMED
6-2-94	Revised E-8 & E-12; Added E-14 & Deleted E-13	
4-1-93	ISSUED	

ARKANSAS STATE HIGHWAY COMMISSION

TEMPORARY EROSION CONTROL DEVICES

STANDARD DRAWING TEC-2

CLEARING AND GRUBBING

CONSTRUCTION SEQUENCE

1. PLACE PERIMETER CONTROLS (I.E. SILT FENCES , DIVERSION DITCHES, SEDIMENT BASINS, ETC.)
2. PERFORM CLEARING AND GRUBBING OPERATION.

EXCAVATION

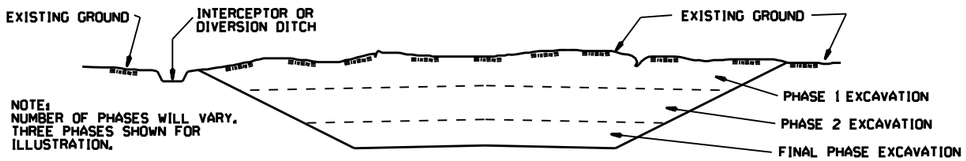

GENERAL NOTE

ALL CUT SLOPES SHALL BE DRESSED, PREPARED, SEEDED, AND MULCHED AS THE WORK PROGRESSES. SLOPES SHALL BE EXCAVATED AND STABILIZED IN EQUAL INCREMENTS NOT TO EXCEED 25 FEET, MEASURED VERTICALLY.

CONSTRUCTION SEQUENCE

1. EXCAVATE AND STABILIZE INTERCEPTOR AND/OR DIVERSION DITCHES.
2. PERFORM PHASE 1 EXCAVATION. PLACE PERMANENT OR TEMPORARY SEEDING.
3. PERFORM PHASE 2 EXCAVATION. PLACE PERMANENT OR TEMPORARY SEEDING.
4. PERFORM FINAL PHASE OF EXCAVATION. PLACE PERMANENT OR TEMPORARY SEEDING. STABILIZE DITCHES. CONSTRUCT DITCH CHECKS, DIVERSION DITCHES, SEDIMENT BASINS, OR OTHER EROSION CONTROL DEVICES AS REQUIRED.

EMBANKMENT

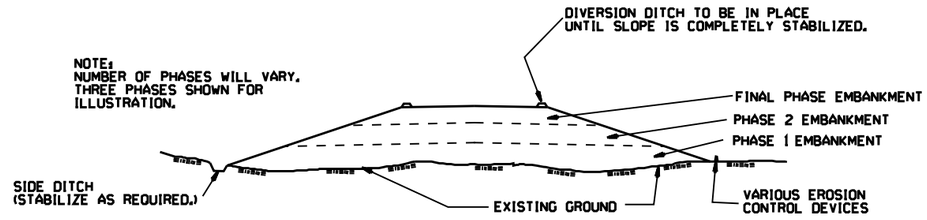

GENERAL NOTE

ALL EMBANKMENT SLOPES SHALL BE DRESSED, PREPARED, SEEDED, AND MULCHED AS THE WORK PROGRESSES. SLOPES SHALL BE CONSTRUCTED AND STABILIZED IN EQUAL INCREMENTS NOT TO EXCEED 25 FEET, MEASURED VERTICALLY.

CONSTRUCTION SEQUENCE

1. CONSTRUCT DIVERSION DITCHES, DITCH CHECKS, SEDIMENT BASINS, SILT FENCES, OR OTHER EROSION CONTROL DEVICES AS SPECIFIED.
2. PLACE PHASE 1 EMBANKMENT WITH PERMANENT OR TEMPORARY SEEDING. PROVIDE DIVERSION DITCHES AND SLOPE DRAINS IF EMBANKMENT CONSTRUCTION IS TO BE TEMPORARILY ABANDONED FOR A PERIOD OF GREATER THAN 21 DAYS.
3. PLACE PHASE 2 EMBANKMENT WITH PERMANENT OR TEMPORARY SEEDING. PROVIDE DIVERSION DITCHES AND SLOPE DRAINS IF EMBANKMENT CONSTRUCTION IS TO BE TEMPORARILY ABANDONED FOR A PERIOD OF GREATER THAN 21 DAYS.
4. PLACE FINAL PHASE OF EMBANKMENT WITH PERMANENT OR TEMPORARY SEEDING. PLACE DIVERSION DITCHES AND SLOPE DRAINS AND MAINTAIN UNTIL ENTIRE SLOPE IS STABILIZED.

DATE	REVISION	FILMED
11-03-94	CORRECTED SPELLING	
6-2-94	Drawn & Issued	6-2-94

ARKANSAS STATE HIGHWAY COMMISSION

TEMPORARY EROSION CONTROL DEVICES

STANDARD DRAWING TEC-3

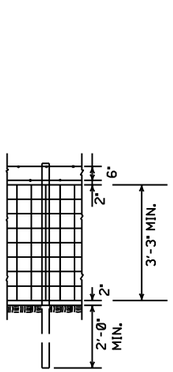

LINE POST
3" MIN. DIA. 6'-3" LENGTH
MAX. SPACING TO BE 10'-0"

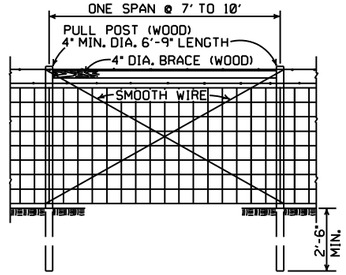

LINE BRACE ASSEMBLY
MAX. SPACING TO BE 330'

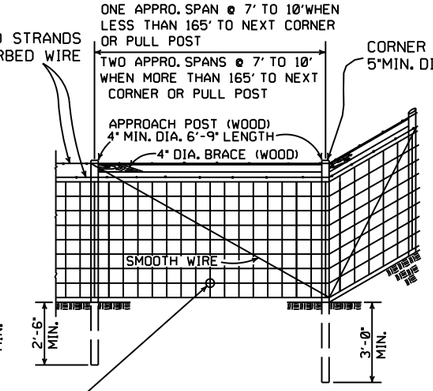

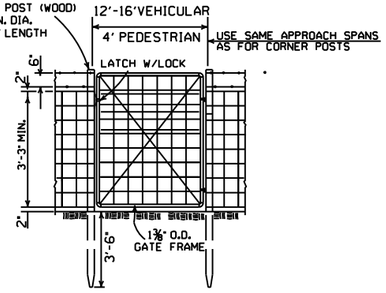

TYPE C FENCE (WOOD POSTS)

OTHER APPROVED TIES
WILL BE PERMITTED

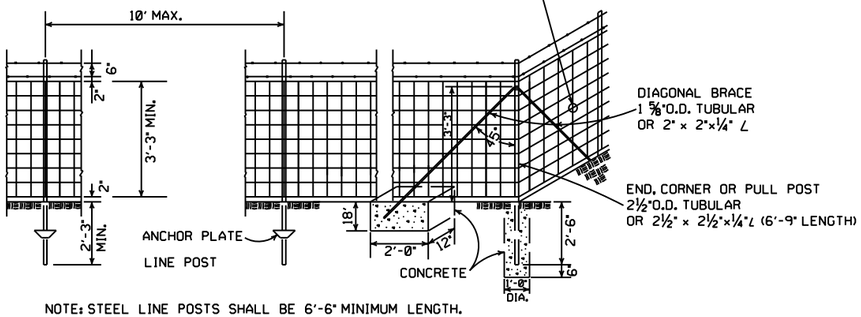

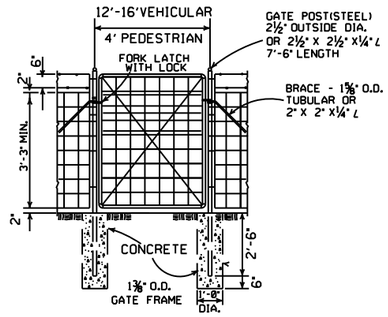

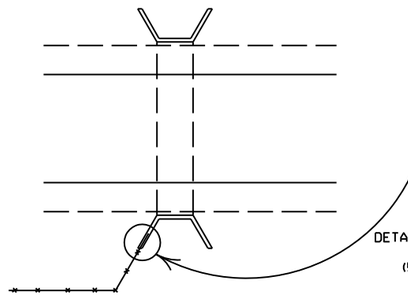

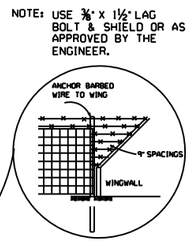

DETAIL OF FENCE CONSTRUCTION
AT LARGE CULVERTS
(5' IN HEIGHT AND OVER)

NOTE: STEEL LINE POSTS SHALL BE 6'-6" MINIMUM LENGTH.

TYPE C FENCE (STEEL POSTS)

4 STRANDS BARBED WIRE (D)
5 STRANDS BARBED WIRE (D-1)
6 STRANDS BARBED WIRE (D-2)

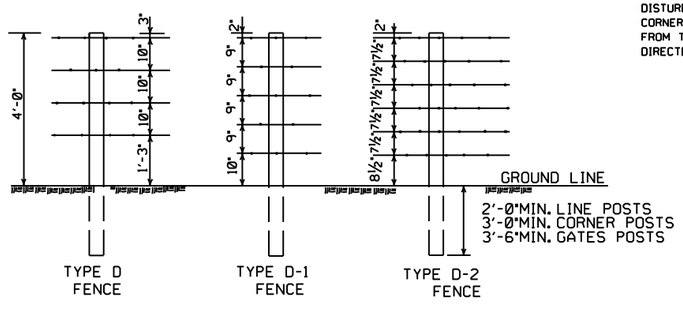

NOTE: SPACING AND SIZE (EXCEPT LENGTH) OF POSTS, APPROACH SPANS, PULL POST ASSEMBLIES, AND CORNER BRACING FOR TYPE D FENCE SHALL CONFORM TO TYPE C FENCE. USE GALVANIZED STAPLES ON WOOD POSTS AND APPROVED FASTENERS ON STEEL POSTS.

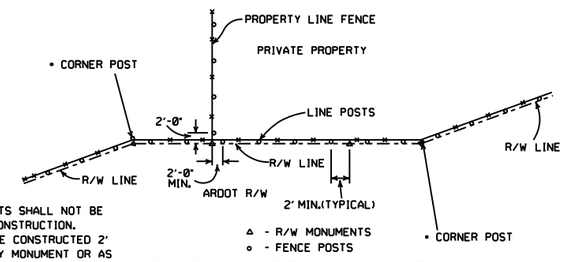

• NOTE: RIGHT-OF-WAY MONUMENTS SHALL NOT BE DISTURBED BY FENCE CONSTRUCTION. CORNER POSTS SHALL BE CONSTRUCTED 2' FROM THE RIGHT-OF-WAY MONUMENT OR AS DIRECTED BY THE ENGINEER.

RIGHT-OF-WAY FENCE LOCATION

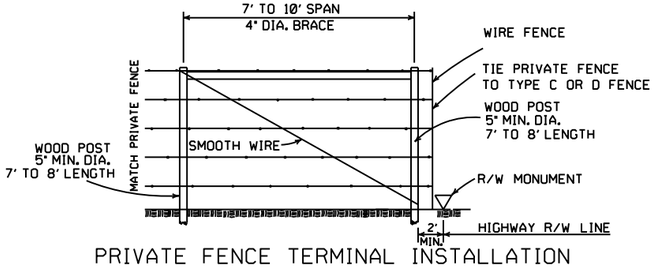

PRIVATE FENCE TERMINAL INSTALLATION

WHERE EXISTING FENCE CONSISTS OF STEEL POSTS, USE END POST ASSEMBLY AS SHOWN IN TYPE C FENCE OR OTHER END POST ASSEMBLY AS APPROVED BY THE ENGINEER.

GENERAL NOTES:

STEEL LINE POSTS SHALL BE PAINTED OR GALVANIZED.
TUBULAR END, CORNER, PULL, OR DIAGONAL BRACES MUST CONFORM TO THE DIMENSIONS AND WEIGHTS SPECIFIED ON STANDARD DRAWING WF-3 (CHAIN LINK). APPROVED ALTERNATES ARE ACCEPTABLE.
AN ACCEPTABLE TOLERANCE IN LENGTH OF TUBULAR OR WOODEN POSTS SHALL BE - 1" TO +2".
TUBULAR POSTS MUST BE PAINTED OR GALVANIZED.

THE CONTRACTOR SHALL FURNISH AT LEAST 25% OF TIMBER LINE POSTS OF 7 FOOT LENGTHS IN ORDER TO PROVIDE SUFFICIENT SET IN SOFT GROUND OR SMALL DEPRESSIONS.

DRIVEWAY GATES, EITHER SINGLE 12' TO 16' OR DOUBLE 6' TO 8' OPENING OF THE SAME TYPE AS THE PEDESTRIAN GATE, SHALL BE INSTALLED ON THE RIGHT SIDE OF EACH THROUGH LANE ROAD AT LARGE CULVERTS OR BRIDGE CROSS FENCE, FOR USE OF MAINTENANCE EQUIPMENT. LOCATION OF GATES TO BE SHOWN ON PLANS OR AS DESIGNATED BY THE ENGINEER.

AT STREAM CROSSINGS, THE FENCE SHALL NOT BE CONSTRUCTED ACROSS LARGE STREAMS. WHERE CLEARANCE IS SUFFICIENT FROM THE TOP OF THE BANK TO THE BRIDGE STRUCTURE A CROSS CONNECTION SHALL BE CONSTRUCTED BETWEEN THE FENCE ON EACH SIDE OF THE ROAD. WHERE THE CLEARANCE IS NOT SUFFICIENT, THE FENCE SHALL BE TERMINATED WITH CROSS CONNECTIONS AND END POSTS ADJACENT TO BRIDGE ABUTMENTS OR CULVERT WINGWALLS.

SPLICE FOR BARBED WIRE BETWEEN PULL POST ASSEMBLY SHALL BE BY THE "EYE METHOD" AS DESCRIBED AS FOLLOWS:
THE ENDS OF THE BARBED WIRE SHALL BE BENT TO FORM A LOOP. THE LOOPS SHALL BE CONNECTED. AFTER THE LOOPS ARE CONNECTED THE ENDS OF THE WIRE SHALL BE WRAPPED AROUND THE PROJECTING WIRES A MINIMUM OF 4 TIMES FOR EACH WIRE LOOP.

SPLICE FOR WOVEN WIRE BETWEEN PULL POST SHALL BE BY THE "WESTERN UNION METHOD" AS DESCRIBED AS FOLLOWS: THE VERTICAL WIRES FOR EACH END OF THE FENCE FABRIC SHALL BE PLACED SIDE BY SIDE AND THE PROJECTING HORIZONTAL WIRES SHALL BE WRAPPED A MINIMUM OF 4 TIMES AROUND THE HORIZONTAL WIRES OF THE FIRST WEB.

STAPLE AT LEAST TOP, BOTTOM AND ALTERNATE WIRES OF WOVEN FABRIC FOR WOOD LINE POSTS.

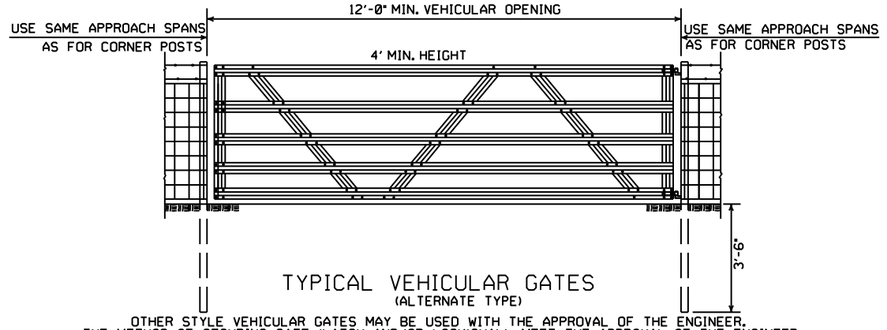

TYPICAL VEHICULAR GATES
(ALTERNATE TYPE)

OTHER STYLE VEHICULAR GATES MAY BE USED WITH THE APPROVAL OF THE ENGINEER.
THE METHOD OF SECURING GATE (LATCH AND/OR LOCK) SHALL MEET THE APPROVAL OF THE ENGINEER.

DATE	REVISION	FILMED
8-22-02	REVISED GENERAL NOTES	
10-18-96	REVISED AASHTO	
11-22-95	REVISED R-O-W LOCATION DETAIL	
6-2-94	REVISED BARB WIRE AND	6-2-94
	ADDED CORNER POST NOTES	
8-5-93	REVISED R/W INSTALLATION FENCE	8-5-93
10-1-92	ADDED STAPLE NOTE	10-1-92
8-15-91	ADDED TYPE D-2 FENCE	8-15-91
11-30-89	DELETED CLASS CONCRETE	11-30-89
7-15-88	ADDED SPLICE NOTE	700-7-15-88
10-30-87	GENERAL REVISIONS	549-10-30-87
11-1-84	MAX. POST SPACING MIN. WIRE GAUGE	507-11-1-84
1-4-83	MIN. DIA. LINE POST	648-1-4-83
3-2-81	TOLERANCE FOR POST LENGTH	722-3-2-81
12-1-72	ADDED D-1 & FENCE INSTALLATION	564-12-1-72
10-2-72	REVISED AND REDRAWN	540-10-2-72

ARKANSAS STATE HIGHWAY COMMISSION

WIRE FENCE
TYPE C AND D

STANDARD DRAWING WF-4

FED. ROAD No.	STATE	FED. AID PROJECT	FISCAL YEAR	SHEET No.	TOTAL SHEETS
6	ARK.				
JOB No.					

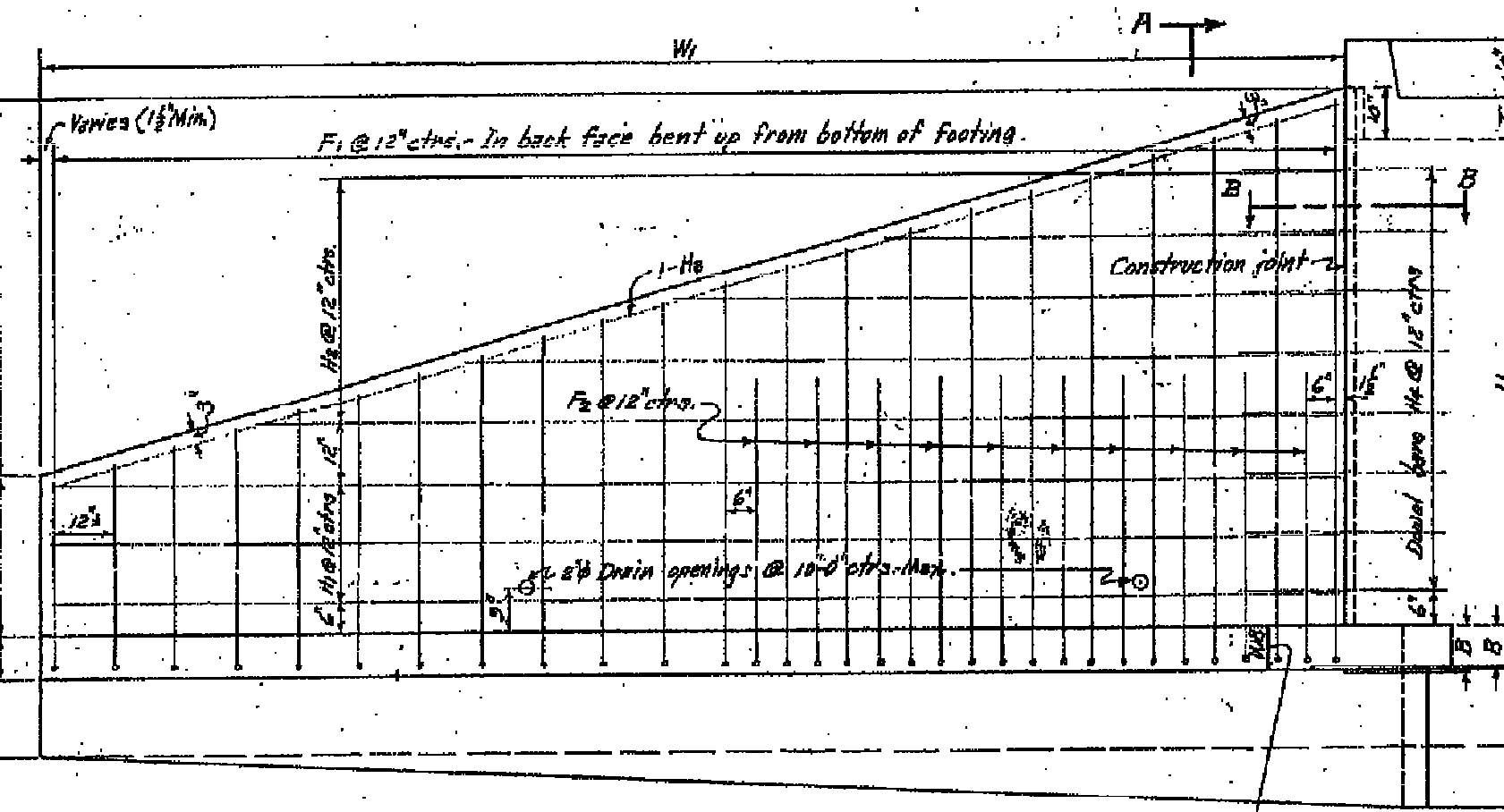

REAR ELEVATION OF WING - SHOWING BACK FACE REINF.

WB may be more, equal to, or less than the bottom slab thickness B.

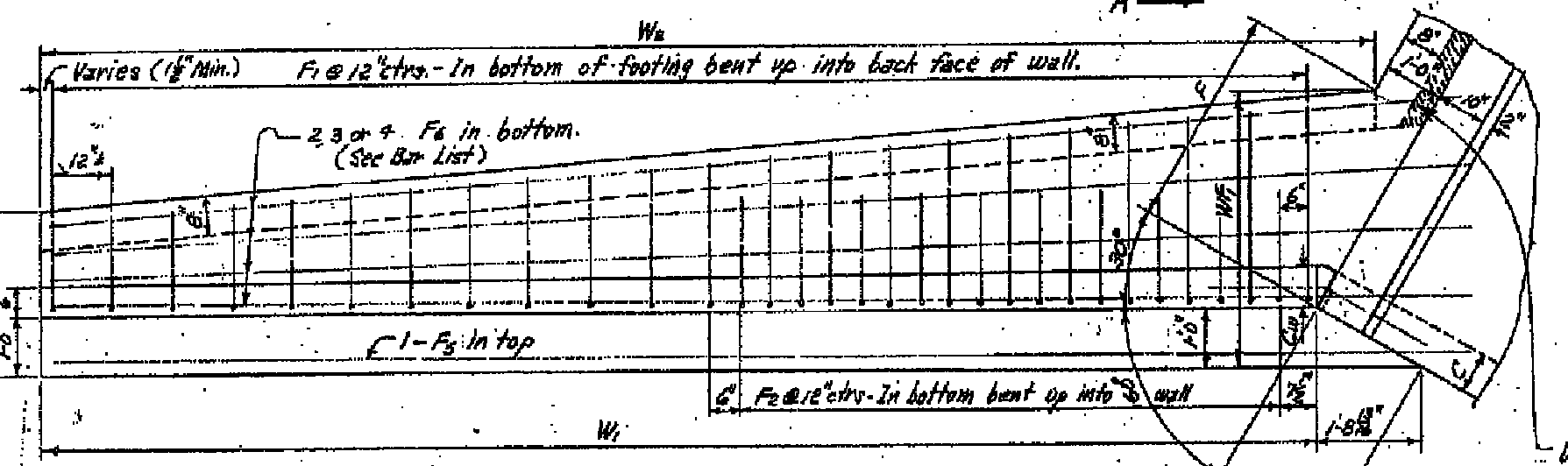

PLAN OF WING - SHOWING FOOTING REINF.

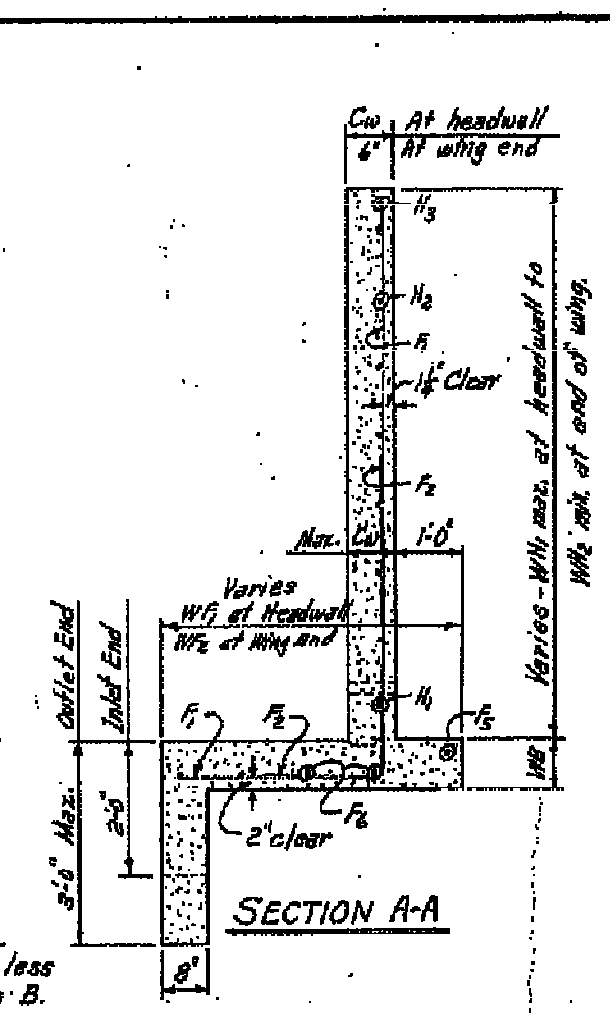

SECTION A-A

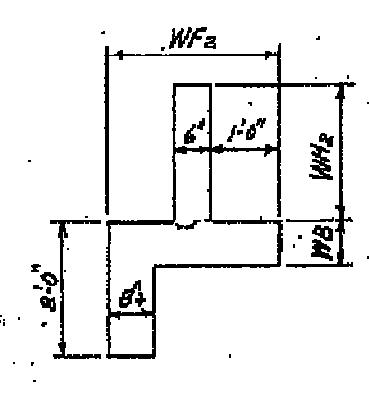

END VIEW OF WING

When B is more than WB, the shaded portion of the apron shall be made the same thickness as the barrel base B.

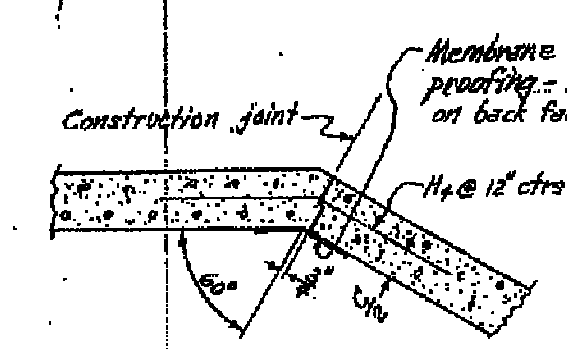

SECTION B-B THRU CONSTRUCTION JOINT

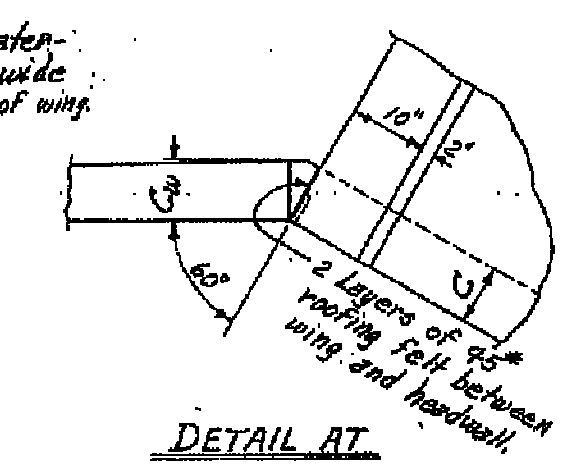

DETAIL AT TOP OF WING

NOTE:- Payment for membrane waterproofing and roofing felt to be included in the price bid for Class S Concrete.

WING DIMENSIONS

CLEAR HEIGHT OF BOX	THICKNESS OF WING FOOTING	THICKNESS OF WING AT HEADWALL = C	WINGWALL HEIGHTS AT HEADWALL	WINGWALL HEIGHTS AT END OF WING	WIDTHS OF WING FOOTINGS AT HEADWALL	WIDTHS OF WING FOOTINGS AT END OF WING	PERPENDICULAR FOOTING DIMENSION	PERPENDICULAR DIST. FROM HDWL. TO END OF WING	LENGTH OF WING WALLS	INSIDE FOOTING DIMENSION	* QUANTITY PER WING CLASS S CONCRETE INLET END	OUTLET END
H	WB	Cw	WH1	WH2	WF1	WF2	F	E	W1	W2	Cu.Yd.	Cu.Yd.
2'	7"	6"	2'-10"	0'-8"	2'-4"	2'-0"	0'-11 3/8"	6'-6"	7'-6"	7'-1 1/2"	0.889	0.986
3'	7"	6"	3'-10"	1'-0"	2'-8"	2'-1 1/2"	1'-4 3/8"	8'-6"	9'-10 3/4"	9'-7 1/2"	1.338	1.466
4'	7"	6"	4'-10"	1'-4"	3'-0"	2'-3"	1'-9"	10'-6"	12'-1 1/2"	12'-1 1/2"	1.868	2.027
5'	7"	6"	5'-10"	1'-8"	3'-4"	2'-4 1/2"	2'-1 5/8"	12'-6"	14'-5 1/4"	14'-7 1/2"	2.478	2.668
		7"	5'-10"	1'-8"	3'-4"	2'-4 1/2"	2'-1 5/8"	12'-6"	14'-5 1/4"	14'-7 1/2"	2.682	2.772
6'	8"	7"	6'-10"	2'-0"	3'-8"	2'-6"	2'-6 3/4"	14'-6"	16'-9"	17'-1 1/2"	3.440	3.661
		7 1/2"	6'-10"	2'-0"	3'-8"	2'-6"	2'-6 3/4"	14'-6"	16'-9"	17'-1 1/2"	3.811	3.732
		8"	6'-10"	2'-0"	3'-8"	2'-6"	2'-6 3/4"	14'-6"	16'-9"	17'-1 1/2"	3.582	3.803
7'	8 1/2"	7 1/2"	7'-10"	2'-4"	4'-2"	2'-7 1/2"	3'-1/4"	16'-6"	19'-0 1/2"	19'-8 3/4"	4.505	4.758
		8"	7'-10"	2'-4"	4'-2"	2'-7 1/2"	3'-1/4"	16'-6"	19'-0 1/2"	19'-8 3/4"	4.597	4.851
8'	9"	8"	8'-10"	2'-8"	4'-8"	2'-9"	3'-8"	18'-6"	21'-4 1/2"	22'-4"	5.761	6.097

* Quantity per wing does not include headwall or that portion of apron or toewall for the length W3.

APRON DIMENSION W3

W3 = (OW - 2F)

CLEAR SPAN	CLEAR HEIGHT	2 × FOOTING DIMENSION	SINGLE BARREL CULVERT OW	W3	DOUBLE BARREL CULVERT OW	W3	TRIPLE BARREL CULVERT OW	W3	QUADRUPLE BARREL CULVERT OW	W3	QUINTUPLE BARREL CULVERT OW	W3
S	H	2F	OW	W3	OW	W3	OW	W3	OW	W3	OW	W3
4'	2'	1'-11 1/2"	5'-0"	3'-0 1/2"	9'-8"	7'-8 1/2"	14'-4"	12'-4 1/2"	19'-0"	17'-0 1/2"	23'-8"	21'-8 1/2"
	3'	2'-8 3/4"	5'-0"	2'-3 1/4"	9'-8"	6'-11 1/4"	14'-4"	11'-7 1/4"	19'-0"	16'-3 1/4"	23'-8"	20'-11 1/4"
	4'	3'-6"	5'-0"	1'-6"	9'-8"	6'-2"	14'-4"	10'-10"	19'-0"	15'-6"	23'-8"	20'-2"
	5'	4'-3 1/4"	5'-0"	0'-8 3/4"	9'-8"	5'-4 3/4"	14'-4"	10'-0 3/4"	19'-0"	14'-8 3/4"	23'-8"	19'-4 3/4"
	6'	5'-0 1/2"	5'-2"	0'-1 1/2"	9'-11"	4'-10 1/2"	14'-8"	9'-7 1/2"	19'-5"	14'-4 1/2"	24'-2"	19'-1 1/2"
5'	3'	2'-8 3/4"	6'-0"	3'-3 1/4"	11'-8"	8'-11 1/4"	17'-4"	14'-7 1/4"	23'-0"	20'-3 1/4"	28'-8"	25'-11 1/4"
	4'	3'-6"	6'-0"	2'-6"	11'-8"	8'-2"	17'-4"	13'-10"	23'-0"	19'-6"	28'-8"	25'-2"
	5'	4'-3 1/4"	6'-0"	1'-8 3/4"	11'-8"	7'-4 3/4"	17'-4"	13'-0 3/4"	23'-0"	18'-8 3/4"	28'-8"	24'-4 3/4"
	6'	5'-0 1/2"	6'-2"	1'-1 1/2"	11'-11"	6'-10 1/2"	17'-8"	12'-7 1/2"	23'-5"	18'-4 1/2"	29'-2"	24'-1 1/2"
	7'	6'-2 1/2"	6'-3"	0'-0 1/2"	12'-1"	5'-10 1/2"	17'-11"	11'-8 1/2"	23'-9"	17'-6 1/2"	29'-7"	23'-4 1/2"
6'	3'	2'-8 3/4"	7'-0"	4'-3 1/4"	13'-8"	10'-11 1/4"	20'-4"	17'-7 1/4"	27'-0"	24'-3 1/4"	33'-8"	30'-11 1/4"
	4'	3'-6"	7'-0"	3'-6"	13'-8"	10'-2"	20'-4"	16'-10"	27'-0"	23'-6"	33'-8"	30'-2"
	5'	4'-3 1/4"	7'-0"	2'-8 3/4"	13'-8"	9'-4 3/4"	20'-4"	16'-0 3/4"	27'-0"	22'-8 3/4"	33'-8"	29'-4 3/4"
	6'	5'-0 1/2"	7'-2"	2'-1 1/2"	13'-11"	8'-10 1/2"	20'-8"	15'-7 1/2"	27'-5"	22'-4 1/2"	34'-2"	29'-1 1/2"
	7'	6'-2 1/2"	7'-3"	1'-0 1/2"	14'-1"	7'-10 1/2"	20'-11"	14'-8 1/2"	27'-9"	21'-6 1/2"	34'-7"	28'-4 1/2"
	8'	7'-4"	7'-4"	0'-0"	14'-2"	6'-10"	21'-0"	13'-8"	27'-10"	20'-6"	34'-8"	27'-4"
7'	4'	3'-6"	8'-0"	4'-6"	15'-8"	12'-2"	23'-4"	19'-10"	31'-0"	27'-6"	38'-8"	35'-2"
	5'	4'-3 1/4"	8'-0"	3'-8 3/4"	15'-8"	11'-4 3/4"	23'-4"	19'-0 3/4"	31'-0"	26'-8 3/4"	38'-8"	34'-4 3/4"
	6'	5'-0 1/2"	8'-2"	3'-1 1/2"	15'-11"	10'-10 1/2"	23'-8"	18'-7 1/2"	31'-5"	26'-4 1/2"	39'-2"	34'-1 1/2"
	7'	6'-2 1/2"	8'-3"	2'-0 1/2"	16'-1"	9'-10 1/2"	23'-11"	17'-8 1/2"	31'-9"	25'-6 1/2"	39'-7"	33'-4 1/2"
	8'	7'-4"	8'-4"	1'-0"	16'-2"	8'-10"	24'-0"	16'-8"	31'-10"	24'-6"	39'-8"	32'-4"
8'	4'	3'-6"	9'-0"	5'-6"	17'-8"	14'-2"	26'-4"	22'-10"	35'-0"	31'-6"	43'-8"	40'-2"
	5'	4'-3 1/4"	9'-2"	4'-10 3/4"	17'-11"	13'-7 3/4"	26'-8"	22'-4 3/4"	35'-5"	31'-1 3/4"	44'-2"	39'-10 3/4"
	6'	5'-0 1/2"	9'-2"	4'-1 1/2"	17'-11"	12'-10 1/2"	26'-8"	21'-7 1/2"	35'-5"	30'-4 1/2"	44'-2"	39'-1 1/2"
	7'	6'-2 1/2"	9'-3"	3'-0 1/2"	18'-1"	11'-10 1/2"	26'-11"	20'-8 1/2"	35'-9"	29'-6 1/2"	44'-7"	38'-4 1/2"
	8'	7'-4"	9'-4"	2'-0"	18'-2"	10'-10"	27'-0"	19'-8"	35'-10"	28'-6"	44'-8"	37'-4"
9'	5'	4'-3 1/4"	10'-2"	5'-10 3/4"	19'-11"	15'-7 3/4"	29'-8"	25'-4 3/4"	39'-5"	35'-1 3/4"	49'-2"	44'-10 3/4"
	6'	5'-0 1/2"	10'-3"	5'-2 1/2"	20'-1"	15'-0 1/2"	29'-11"	24'-10 1/2"	39'-9"	34'-8 1/2"	49'-7"	44'-6 1/2"
	7'	6'-2 1/2"	10'-3"	4'-0 1/2"	20'-1"	13'-10 1/2"	29'-11"	23'-8 1/2"	39'-9"	33'-6 1/2"	49'-7"	43'-4 1/2"
	8'	7'-4"	10'-4"	3'-0"	20'-2"	12'-10"	30'-0"	22'-8"	39'-10"	32'-6"	49'-8"	42'-4"
10'	5'	4'-3 1/4"	11'-2"	6'-10 3/4"	21'-11"	17'-7 3/4"	32'-8"	28'-4 3/4"	43'-5"	39'-1 3/4"	54'-2"	49'-10 3/4"
	6'	5'-0 1/2"	11'-3"	6'-2 1/2"	22'-1"	17'-0 1/2"	32'-11"	27'-10 1/2"	43'-9"	38'-8 1/2"	54'-7"	49'-6 1/2"
	7'	6'-2 1/2"	11'-3"	5'-0 1/2"	22'-1"	15'-10 1/2"	32'-11"	26'-8 1/2"	43'-9"	37'-6 1/2"	54'-7"	48'-4 1/2"
	8'	7'-4"	11'-4"	4'-0"	22'-2"	14'-10"	33'-0"	25'-8"	43'-10"	36'-6"	54'-8"	47'-4"
11'	6'	5'-0 1/2"	12'-4"	7'-3 1/2"	24'-2"	19'-1 1/2"	36'-0"	30'-11 1/2"	47'-10"	42'-9 1/2"		
	7'	6'-2 1/2"	12'-4"	6'-1 1/2"	24'-2"	17'-11 1/2"	36'-0"	29'-9 1/2"	47'-10"	41'-7 1/2"		
	8'	7'-4"	12'-4"	5'-0"	24'-2"	16'-10"	36'-0"	28'-8"	47'-10"	40'-6"		
12'	6'	5'-0 1/2"	13'-4"	8'-3 1/2"	26'-2"	21'-1 1/2"	39'-0"	33'-11 1/2"	51'-10"	46'-9 1/2"		
	7'	6'-2 1/2"	13'-4"	7'-1 1/2"	26'-2"	19'-11 1/2"	39'-0"	32'-9 1/2"	51'-10"	45'-7 1/2"		
	8'	7'-4"	13'-4"	6'-0"	26'-2"	18'-10"	39'-0"	31'-8"	51'-10"	44'-6"		

QUANTITIES

CLEAR SPAN	CLEAR HEIGHT	THICKNESS OF WING AT HEADWALL	THICKNESS OF WING FOOTING	⊕ REINFORCING STEEL FOR 4 WINGS	CLASS S CONCRETE - 4 WINGS (Headwalls, Wingwalls, Footings, Toewalls and Aprons) SINGLE BARREL CULVERT	DOUBLE BARREL CULVERT	TRIPLE BARREL CULVERT	QUADRUPLE BARREL CULVERT	QUINTUPLE BARREL CULVERT
S	H	Cw	WB	LB.	CU.YD.	CU.YD.	CU.YD.	CU.YD.	CU.YD.
4'	2'	6"	7"	108.0	4.50	5.46	6.42	7.38	8.34
	3'	6"	7"	164.4	6.26	7.21	8.17	9.13	10.09
	4'	6"	7"	254.6	8.33	9.28	10.24	11.20	12.16
	5'	6"	7"	357.8	10.72	11.68	12.64	13.60	14.56
	6'	7"	8"	583.1	14.56	15.53	16.52	17.51	18.49
5'	3'	6"	7"	164.4	6.47	7.68	8.79	9.96	11.12
	4'	6"	7"	254.6	8.54	9.70	10.87	10.03	13.20
	5'	6"	7"	357.8	10.94	12.10	13.26	14.43	15.59
	6'	7"	8"	583.1	14.77	15.96	17.15	18.34	19.54
	7'	7 1/2"	8 1/2"	1134.6	18.94	20.16	21.37	22.59	23.80
6'	3'	6"	7"	164.4	6.68	8.06	9.42	10.80	12.18
	4'	6"	7"	254.6	8.75	10.14	11.49	12.87	14.25
	5'	6"	7"	357.8	11.15	12.53	13.89	15.27	16.65
	6'	7"	8"	583.1	14.98	16.39	17.78	19.18	20.59
	7'	7 1/2"	8 1/2"	1134.6	19.15	20.58	22.00	23.43	24.86
	8'	8"	9"	1425.6	24.09	25.53	26.96	28.39	29.83
7'	4'	6"	7"	254.6	8.97	10.58	12.15	13.76	15.35
	5'	6"	7"	357.8	11.36	12.97	14.54	16.15	17.75
	6'	7"	8"	583.1	15.20	16.82	18.42	20.04	21.66
	7'	7 1/2"	8 1/2"	1134.6	19.38	21.02	22.64	24.28	25.92
	8'	8"	9"	1425.6	24.32	25.97	27.60	29.25	30.89
8'	4'	6"	7"	254.6	9.19	11.03	12.82	14.65	16.45
	5'	7"	7"	357.8	12.03	13.89	15.70	17.55	19.36
	6'	7"	8"	583.1	15.92	17.27	19.09	20.93	22.75
	7'	7 1/2"	8 1/2"	1134.6	19.59	21.46	23.30	25.16	26.99
	8'	8"	9"	1425.6	24.54	26.41	28.24	30.11	31.96
9'	5'	7"	7"	357.8	12.26	14.34	16.37	18.45	20.47
	6'	7 1/2"	8"	583.1	15.94	18.04	20.09	22.19	24.23
	7'	7 1/2"	8 1/2"	1134.6	19.81	21.91	23.96	26.06	28.10
	8'	8"	9"	1425.6	24.76	26.86	28.91	31.00	33.05
10'	5'	7"	7"	357.8	12.49	14.80	17.05	19.26	21.52
	6'	7 1/2"	8"	583.1	16.17	18.50	20.77	22.99	25.28
	7'	7 1/2"	8 1/2"	1134.6	20.04	22.37	24.64	26.87	29.15
	8'	8"	9"	1425.6	24.98	27.31	29.58	31.81	34.10
11'	6'	8"	8"	583.1	16.69	19.27	21.76	24.23	
	7'	8"	8 1/2"	1134.6	20.64	23.22	25.71	28.18	
	8'	8"	9"	1425.6	25.19	27.77	30.27	32.74	
12'	6'	8"	8"	583.1	16.92	19.75	22.45	25.18	
	7'	8"	8 1/2"	1134.6	20.87	23.69	26.40	29.13	
	8'	8"	9"	1425.6	25.42	28.25	30.96	33.69	

⊕ For reinforcing steel in Headwalls and Aprons, See Details of Standard Barrel Sections for R.C. Box Culverts for the desired Span and Height.

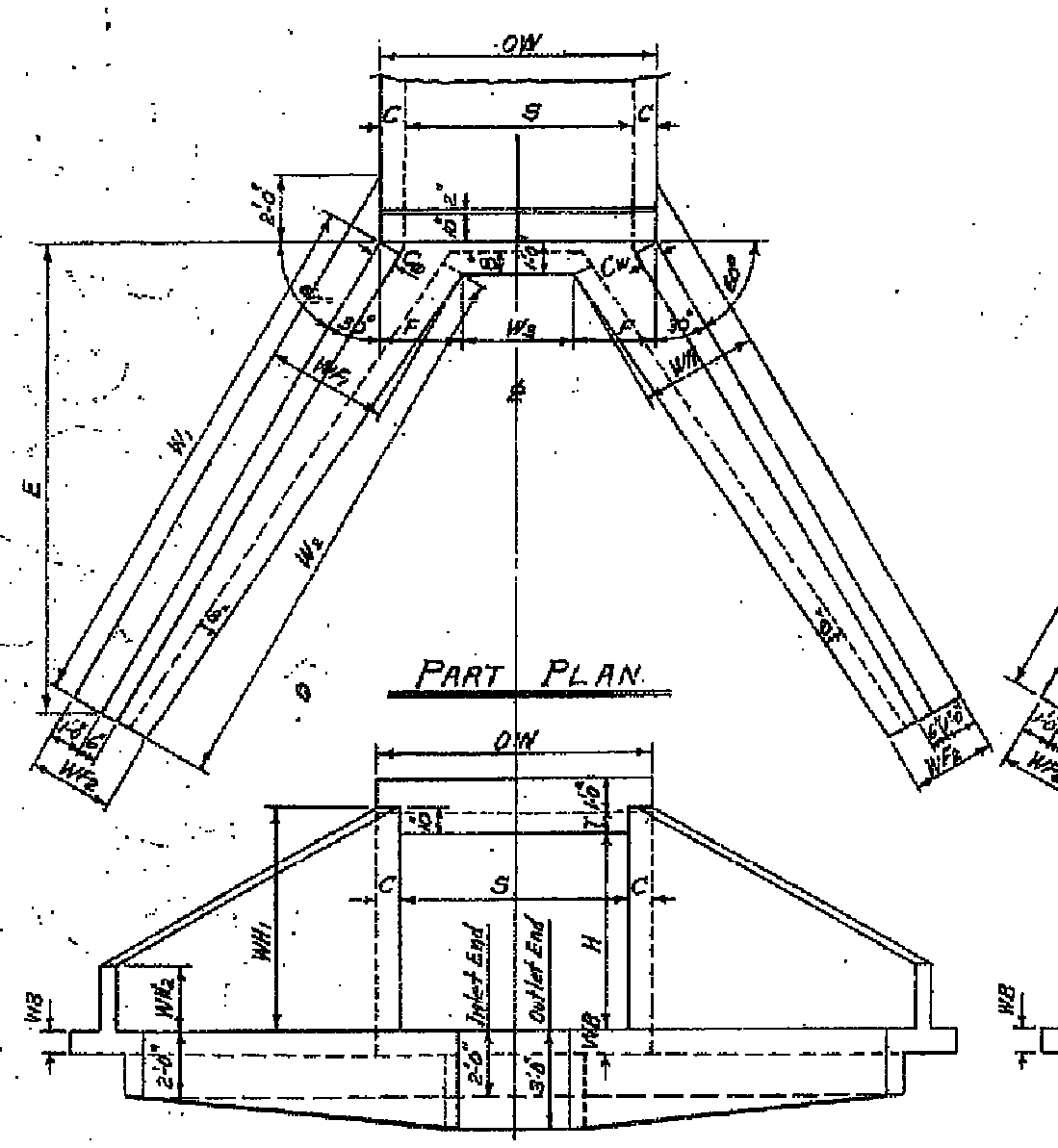

PART PLAN

END ELEVATION

SINGLE BARREL CULVERT

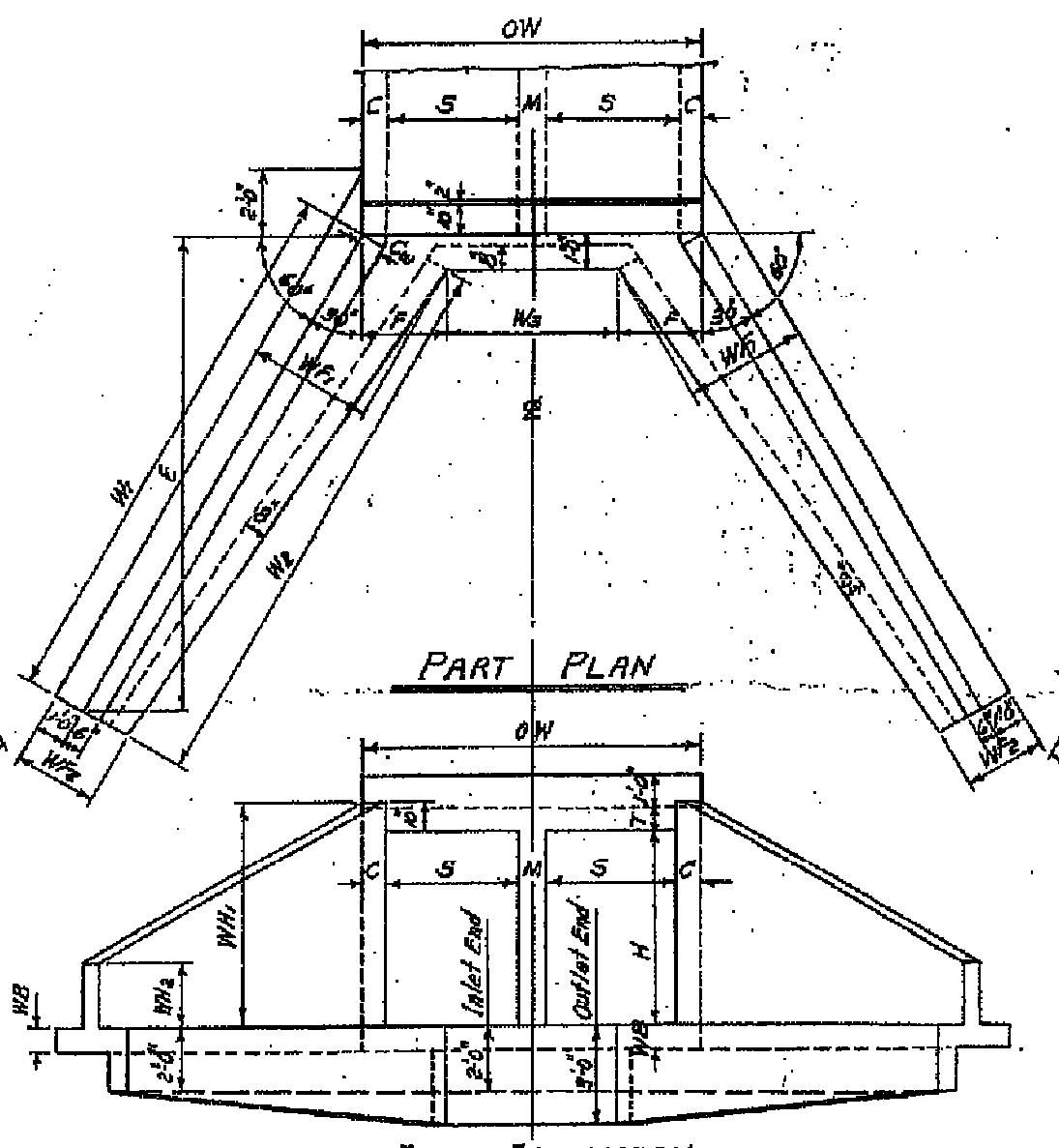

PART PLAN

END ELEVATION

DOUBLE BARREL CULVERT

NOTE:- Plans and Elevations are not to scale.

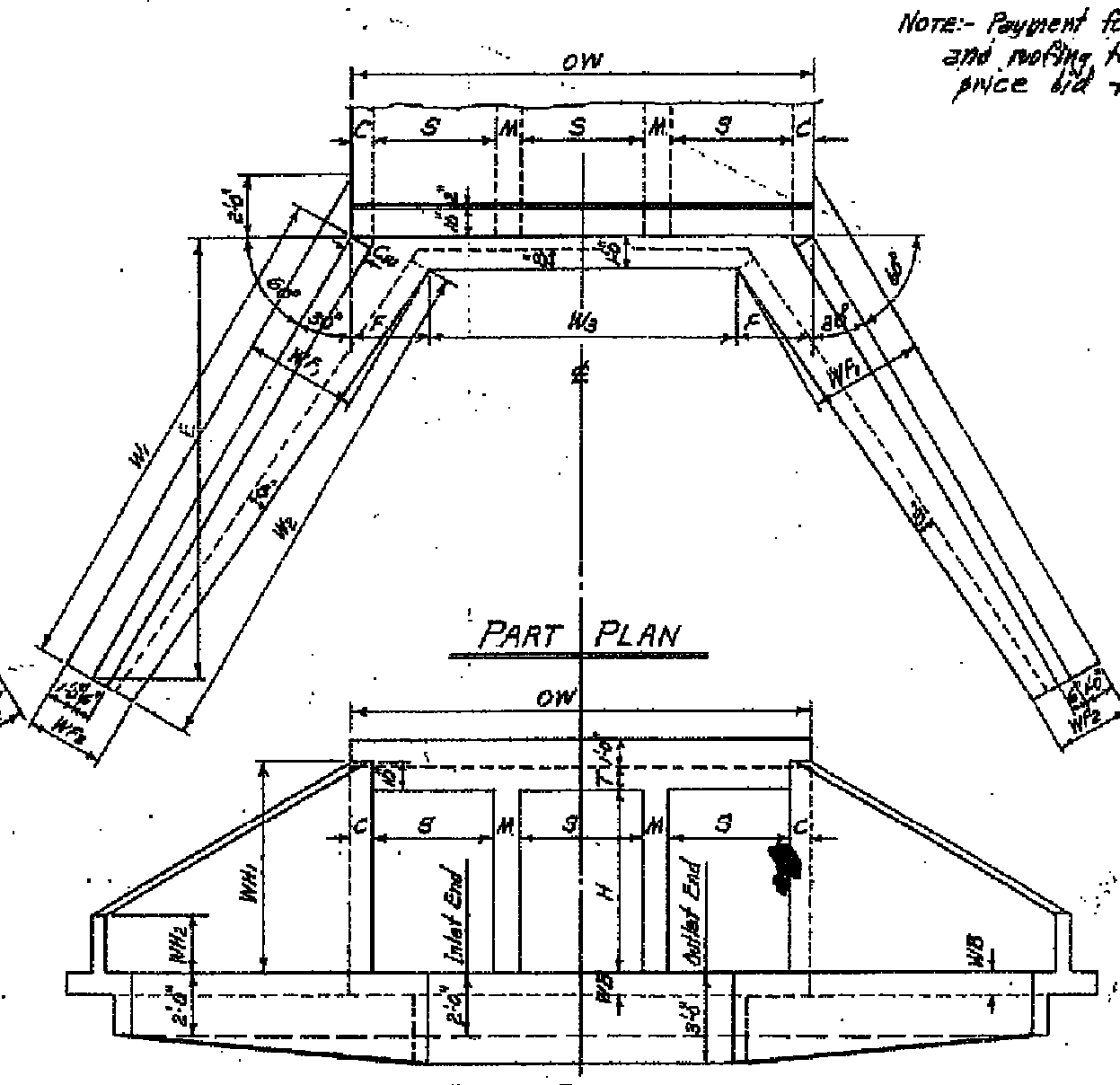

PART PLAN

END ELEVATION

TRIPLE BARREL CULVERT

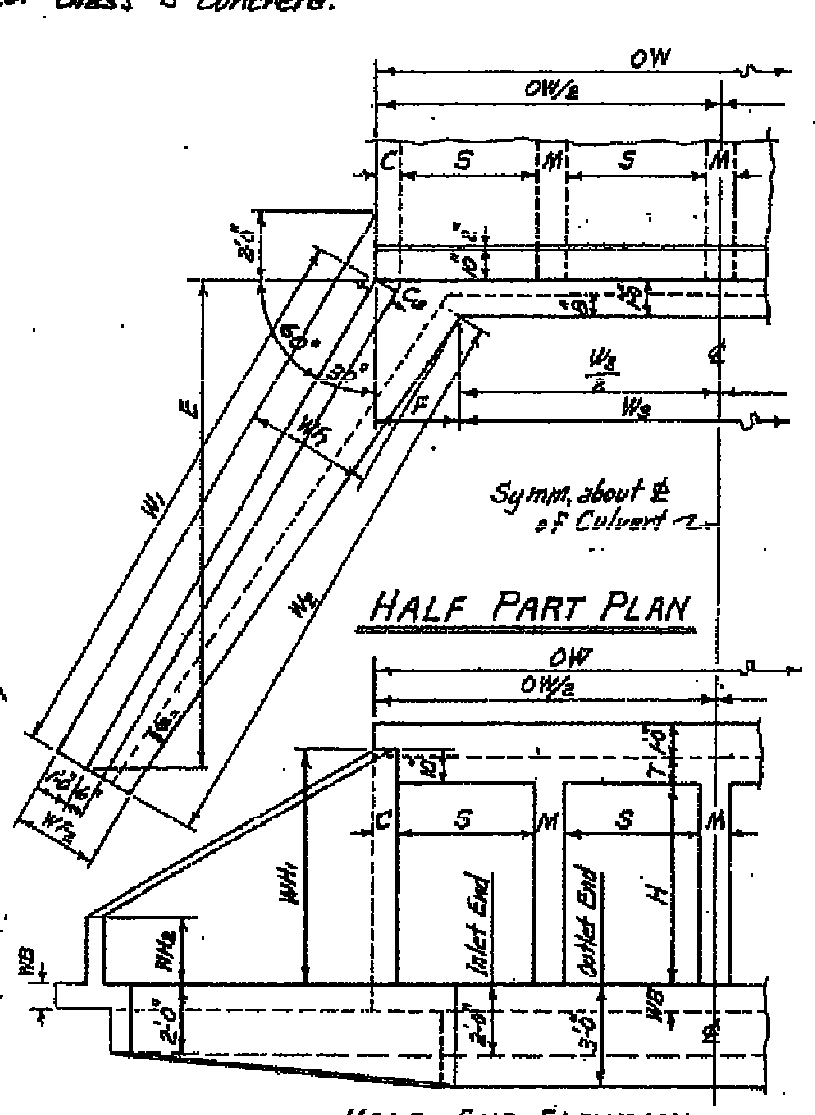

Symm. about ℄ of Culvert

HALF PART PLAN

HALF END ELEVATION

QUADRUPLE BARREL CULVERT

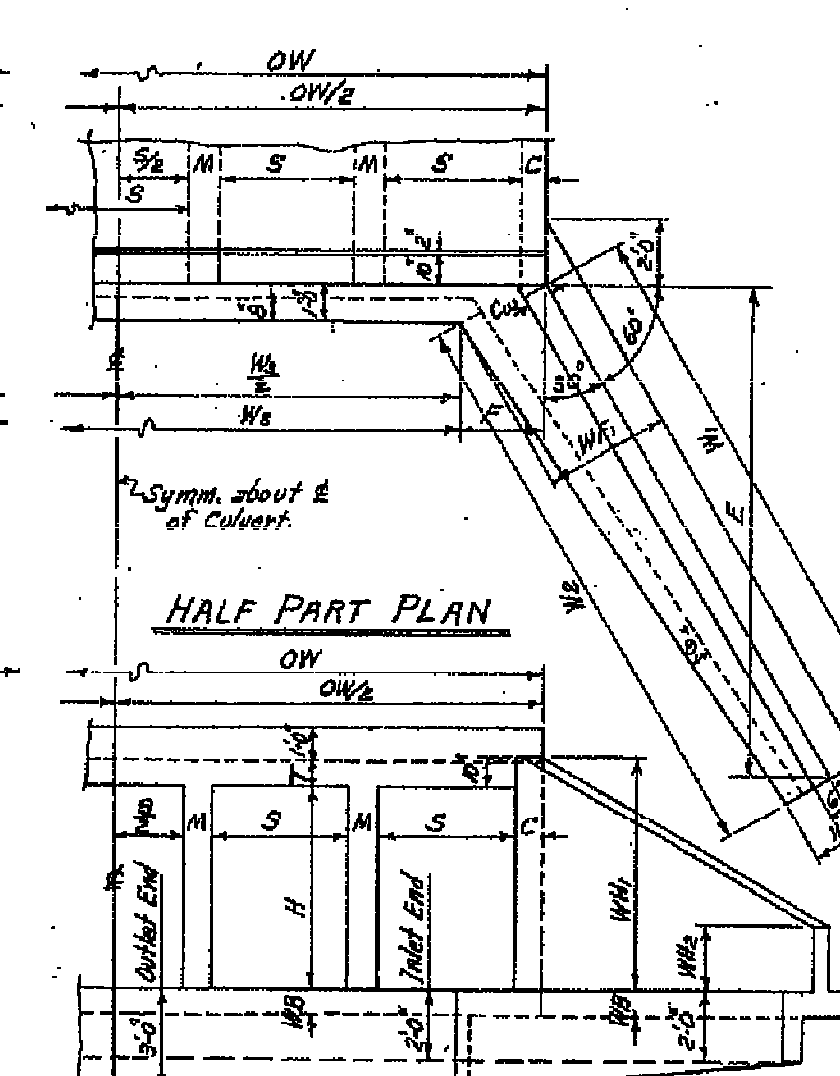

Symm. about ℄ of Culvert

HALF PART PLAN

HALF END ELEVATION

QUINTUPLE BARREL CULVERT

GENERAL NOTES:-

CONCRETE:- All concrete to be Class S, and shall be poured in the dry. All exposed corners to have 3/4" chamfers.

REINFORCING STEEL:- Reinforcing steel to be deformed bars of intermediate or hard grade.

CONSTRUCTION JOINTS:- Construction joints between wingwall, footings and sidewalls shall be only where shown on plans.

SPECIFICATIONS:- Arkansas State Highway Commission Standard Specifications for Highway Construction and applicable Special Provisions.

UNIT STRESSES:-

Class S Concrete (n=10) 1200#/□"

Reinforcing Steel 20,000#/□"

NOTE:- This drawing to be used in conjunction with Standard Barrel Sections, Drawing Nos. as listed below.

SINGLES	DOUBLES	TRIPLES	QUADRUPLES	QUINTUPLES
R-100X-0	R-200X-0	R-300X-0	R-400X-0	R-500X-0
R-100X-X1	R-200X-X1	R-300X-X1	R-400X-X1	R-500X-X1
R-100X-X2	R-200X-X2	R-300X-X2	R-400X-X2	
	R-200X-X3	R-300X-X3		

MEMBRANE:- A membrane waterproofing 12" wide, consisting of three moppings of waterproofing asphalt and two alternate layers of treated cotton fabric shall be applied to the back face of wing to cover the construction joints in wings.

BAR LIST FOR ONE WING - 4 REQUIRED

F1 — BENT — In bottom of footing, bent up into back face of wing. One bar of each length.
F2 — BENT — In bottom of footing, bent up into back face of wing. Alt. with F1 bars.
F5 — STRAIGHT — Longitudinal in top of wing footing heel.
F6 — STRAIGHT — Longitudinal in bottom of wing footing toe.
H1 — STRAIGHT — Horizontal in back face of wing.
H2 — STRAIGHT — Horizontal in back face of wing. One bar of each length.
H3 — STRAIGHT — In back face of wing at top - on slope.
H4 — BENT — Dowels thru construction joint at headwall.

CLEAR HEIGHT H	F1 SIZE	F1 SPACING	F1 No. REQ'D	F1 LENGTHS VARY MIN.	F1 LENGTHS VARY MAX.	F1 X MIN.	F1 X MAX.	F1 Y MIN.	F1 Y MAX.	F2 SIZE	F2 SPACING	F2 No. REQ'D	F2 LENGTH	F2 X	F2 Y	F5 SIZE	F5 No. REQ'D	F5 LENGTH	F6 SIZE	F6 No. REQ'D	F6 LENGTH	H1 SIZE	H1 SPACING	H1 No. REQ'D	H1 LENGTH	H2 SIZE	H2 SPACING	H2 No. REQ'D	H2 LENGTHS VARY MAX.	H2 LENGTHS VARY MIN.	H3 SIZE	H3 No. REQ'D	H3 LENGTH	H4 SIZE	H4 SPACING	H4 No. REQ'D	H4 LENGTH	H4 X	QUANTITY REINFORCING STEEL PER WING LB.
2'	#3	12"	8	1'-6"	3'-10"	0'-8"	1'-0"	0'-11"	2'-11"	—	—	—	—	—	—	#3	1	9'-8"	#3	2	8'-6"	#3	12"	1	7'-2"	#3	12"	1	—	4'-0"	#3	1	7'-4"	#3	12"	2	2'-8"	1'-4"	27.0
3'	#3	12"	10	2'-2"	5'-2"	0'-10"	1'-3"	1'-5"	4'-0"	—	—	—	—	—	—	#3	1	12'-0"	#3	2	11'-0"	#3	12"	1	9'-6"	#3	12"	2	7'-6"	4'-0"	#3	1	9'-9"	#3	12"	3	2'-8"	1'-4"	41.1
4'	#3	12"	13	2'-4"	6'-6"	0'-11"	1'-7"	1'-6"	5'-0"	—	—	—	—	—	—	#3	1	14'-4"	#3	3	13'-6"	#3	12"	1	11'-10"	#3	12"	3	10'-11"	4'-0"	#3	1	12'-2"	#3	12"	4	2'-8"	1'-4"	63.7
5'	#3	12"	15	2'-11"	7'-10"	1'-1"	1'-11"	1'-11"	6'-0"	#3	12"	4	3'-6"	1'-1"	2'-6"	#3	1	16'-8"	#3	3	16'-0"	#3	12"	2	14'-2"	#3	12"	3	10'-11"	4'-0"	#3	1	14'-7"	#3	12"	5	2'-8"	1'-4"	89.5
6'	#4	12"	17	3'-6"	9'-3"	1'-2"	2'-3"	2'-5"	7'-1"	#3	12"	4	4'-6"	1'-4"	3'-3"	#3	1	19'-0"	#3	3	18'-6"	#3	12"	2	16'-6"	#3	12"	4	14'-4"	4'-0"	#3	1	17'-0"	#3	12"	6	2'-8"	1'-4"	145.8
7'	#4	12"	20	3'-9"	10'-9"	1'-3"	2'-9"	2'-7"	8'-1"	#4	12"	7	5'-6"	1'-7"	4'-0"	#4	1	21'-4"	#4	4	21'-0"	#4	12"	2	18'-9"	#4	12"	5	17'-9"	4'-0"	#4	1	19'-5"	#4	12"	7	3'-6"	1'-9"	283.7
8'	#4	12"	22	4'-4"	12'-3"	1'-5"	3'-2"	3'-0"	9'-2"	#4	12"	10	6'-6"	1'-10"	4'-9"	#4	1	23'-8"	#4	4	23'-9"	#4	12"	3	21'-1"	#4	12"	6	17'-9"	4'-0"	#4	1	21'-10"	#4	12"	8	3'-6"	1'-9"	356.4

BAR BENDING DIAGRAMS

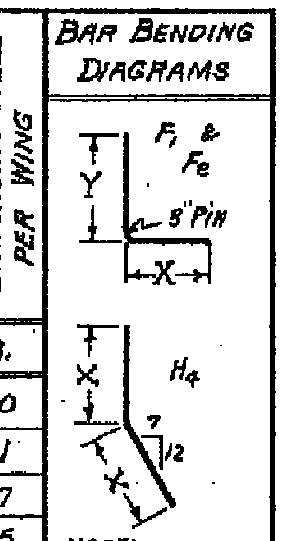

NOTE:- Dimensions are to bar centers.

REVISIONS:- Membrane added. 5-10-66 W.C.H.

CLASS S CONCRETE

ARKANSAS STATE HIGHWAY COMMISSION

DETAILS OF STANDARD WINGS FOR REINFORCED CONCRETE BOX CULVERTS

4', 5', 6', 7', 8', 9', 10', 11' & 12' SPANS — 3:1 SLOPES

SINGLES, DOUBLES, TRIPLES, QUADRUPLES & QUINTUPLES. — ALL DEPTHS OF COVER FOR H = 8'-0" OR LESS

STANDARD DRAWING NO. W-X003-1

Designed By:- W.C.H. 8-20-62. Checked By:- RHS 1-9-63
Drawn By:- W.C.H. 12-4-62. Checked By:- RHS 1-31-63
Quantities By:- W.C.H. 12-14-62. Checked By:- Rechecked By:- RHS 3-29-63

MYLAR

FED. ROAD No.	STATE	FED. AID PROJECT	FISCAL YEAR	SHEET No.	TOTAL SHEETS
6	ARK.				
JOB No.					

BAR LIST FOR BARREL SECTION 60'-0" IN LENGTH

Depth of Cover (D): 0'-0" TO 5'-0" MAXIMUM.

"a" bars – STRAIGHT – In Top and Bottom Slabs of Barrel. 2 Add'l in Apron and Headwall - Each.
"b" bars – BENT - See Diagram below. – In Top and Bottom Slabs of Barrel. Alternate with "a" bars.

Clear Span S	Clear Height H	"a" Size	"a" Spacing	"a" No. Req'd 3:1	"a" No. Req'd 4:1	"a" Length	"b" Size	"b" Spacing	"b" No. Req'd 3:1	"b" No. Req'd 4:1	"b" Length	X
1 @ 4'	2'	#5	13"	120	120	4'-9"	#6	13"	110	110	5'-10"	4'-8"
	3'			120	120	4'-9"			110	110	5'-10"	4'-8"
	4'			120	120	4'-9"			110	110	5'-10"	4'-8"
	5'			120	120	4'-9"			110	110	5'-10"	4'-8"
	6'			120	120	4'-11"			110	110	6'-0"	4'-10"
1 @ 5'	3'	#6	13"	120	120	5'-9"	#6	13"	110	110	6'-10"	5'-8"
	4'			120	120	5'-9"			110	110	6'-10"	5'-8"
	5'			120	120	5'-9"			110	110	6'-10"	5'-8"
	6'			120	120	5'-11"			110	110	7'-0"	5'-10"
	7'			120	120	6'-0"			110	110	7'-1"	5'-11"
1 @ 6'	3'	#6	12"	128	128	6'-9"	#6	12"	118	118	7'-10"	6'-8"
	4'			128	128	6'-9"			118	118	7'-10"	6'-8"
	5'			128	128	6'-9"			118	118	7'-10"	6'-8"
	6'			128	128	6'-11"			118	118	8'-0"	6'-10"
	7'			128	128	7'-0"			118	118	8'-1"	6'-11"
	8'			128	128	7'-1"			118	118	8'-2"	7'-0"
1 @ 7'	4'	#6	11"	140	140	7'-9"	#6	11"	130	130	8'-10"	7'-8"
	5'			140	140	7'-9"			130	130	8'-10"	7'-8"
	6'			140	140	7'-11"			130	130	9'-0"	7'-10"
	7'			140	140	8'-0"			130	130	9'-1"	7'-11"
	8'			140	140	8'-1"			130	130	9'-2"	8'-0"
	9'			140	140	8'-3"			130	130	9'-4"	8'-2"
1 @ 8'	4'	#7	12"	128	128	8'-9"	#6	12"	118	118	9'-10"	8'-8"
	5'			128	128	8'-11"			118	118	10'-0"	8'-10"
	6'			128	128	8'-11"			118	118	10'-0"	8'-10"
	7'			128	128	9'-0"			118	118	10'-1"	8'-11"
	8'			128	128	9'-1"			118	118	10'-2"	9'-0"
	9'			128	128	9'-3"			118	118	10'-4"	9'-2"
	10'			128	128	9'-5"			118	118	10'-6"	9'-4"
1 @ 9'	5'	#7	11"	140	140	9'-11"	#6	11"	130	130	11'-0"	9'-10"
	6'			140	140	10'-0"			130	130	11'-1"	9'-11"
	7'			140	140	10'-0"			130	130	11'-1"	9'-11"
	8'			140	140	10'-1"			130	130	11'-2"	10'-0"
	9'			140	140	10'-3"			130	130	11'-4"	10'-2"
	10'			140	140	10'-5"			130	130	11'-6"	10'-4"
	11'			140	140	10'-7"			130	130	11'-8"	10'-6"
1 @ 10'	5'	#7	12"	128	128	10'-11"	#7	12"	118	118	12'-2"	10'-10"
	6'			128	128	11'-0"			118	118	12'-3"	10'-11"
	7'			128	128	11'-0"			118	118	12'-3"	10'-11"
	8'			128	128	11'-1"			118	118	12'-4"	11'-0"
	9'			128	128	11'-3"			118	118	12'-6"	11'-2"
	10'			128	128	11'-5"			118	118	12'-8"	11'-4"
	11'			128	128	11'-7"			118	118	12'-10"	11'-6"
	12'			128	128	11'-9"			118	118	13'-0"	11'-8"
1 @ 11'	6'	#7	11"	140	140	12'-1"	#7	11"	130	130	13'-4"	12'-0"
	7'			140	140	12'-1"			130	130	13'-4"	12'-0"
	8'			140	140	12'-1"			130	130	13'-4"	12'-0"
	9'			140	140	12'-3"			130	130	13'-6"	12'-2"
	10'			140	140	12'-5"			130	130	13'-8"	12'-4"
	11'			140	140	12'-7"			130	130	13'-10"	12'-6"
	12'			140	140	12'-9"			130	130	14'-0"	12'-8"
1 @ 12'	6'	#8	12"	128	128	13'-1"	#7	12"	118	118	14'-4"	13'-0"
	7'			128	128	13'-1"			118	118	14'-4"	13'-0"
	8'			128	128	13'-1"			118	118	14'-4"	13'-0"
	9'			128	128	13'-3"			118	118	14'-6"	13'-2"
	10'			128	128	13'-5"			118	118	14'-8"	13'-4"
	11'			128	128	13'-7"			118	118	14'-10"	13'-6"
	12'			128	128	13'-9"			118	118	15'-0"	13'-8"

STRAIGHT: "d" bars – Longitudinal in Top Slab of Barrel; "d1" bars – Longitudinal in Sidewalls; "e" bars – Longitudinal in Bottom Slab of Barrel; "f" bars – Verticals in Sidewalls.

Lengths: "d" bars – 2 @ 30'-8" for 60'-0" Length Barrel. (1'-8" Lap); "d1" bars – 2 @ 30'-6" for 60'-0" Length Barrel. (1'-3" Lap); "e" bars – 2 @ 31'-6" for 60'-0" Length Barrel. (1'-3" Lap)

Clear Span S	Clear Height H	"d" Size	"d" Spacing	"d" No. Req'd	"d1" Size	"d1" Spacing	"d1" No. Req'd	"e" Size	"e" Spacing	"e" No. Req'd	"f" Size	"f" Spacing	"f" No. Req'd 3:1	"f" No. Req'd 4:1	"f" Length
1 @ 4'	2'	#5	10½"	6	#4	12"	4	#4	12"	5	#4	12"	120	120	2'-11"
	3'			6			6			5			120	120	3'-11"
	4'			6			8			5			120	120	4'-11"
	5'			6			10			5			120	120	5'-11"
	6'			6			12			5			120	120	6'-11"
1 @ 5'	3'	#5	10½"	7	#4	12"	6	#4	12"	6	#4	12"	120	120	4'-0"
	4'			7			8			6			120	120	5'-0"
	5'			7			10			6			120	120	6'-0"
	6'			7			12			6			120	120	7'-0"
	7'			7			14			6			120	120	8'-0"
1 @ 6'	3'	#5	10½"	8	#4	12"	6	#4	12"	7	#4	12"	120	120	4'-1"
	4'			8			8			7			120	120	5'-1"
	5'			8			10			7			120	120	6'-1"
	6'			8			12			7			120	120	7'-1"
	7'			8			14			7			120	120	8'-1"
	8'			8			16			7	#5	12"	120	120	9'-1"
1 @ 7'	4'	#5	10½"	9	#4	12"	8	#4	12"	8	#4	12"	120	120	5'-2"
	5'			9			10			8			120	120	6'-2"
	6'			9			12			8			120	120	7'-2"
	7'			9			14			8			120	120	8'-2"
	8'			9			16			8		10"	144	144	9'-2"
	9'			9			18			8	#5	12"	120	120	10'-2"
1 @ 8'	4'	#5	10"	11	#4	12"	8	#4	12"	9	#4	18"	120	120	5'-4"
	5'			11			10			9			120	120	6'-4"
	6'			11			12			9			120	120	7'-4"
	7'			11			14			9			120	120	8'-4"
	8'			11			16			9		10"	144	144	9'-4"
	9'			11			18			9	#5	12"	120	120	10'-4"
	10'			11			20			9		11"	132	132	11'-4"
1 @ 9'	5'	#5	10"	12	#4	12"	10	#4	12"	10	#4	12"	120	120	6'-5"
	6'			12			12			10			120	120	7'-5"
	7'			12			14			10			120	120	8'-5"
	8'			12			16			10		10"	144	144	9'-5"
	9'			12			18			10	#5	12"	120	120	10'-5"
	10'			12			20			10		11"	132	132	11'-5"
	11'			12			22			10		10"	144	144	12'-5"
1 @ 10'	5'	#5	10"	13	#4	12"	10	#4	12"	11	#4	18"	120	120	6'-6"
	6'			13			12			11			120	120	7'-6"
	7'			13			14			11			120	120	8'-6"
	8'			13			16			11		10"	144	144	9'-6"
	9'			13			18			11	#5	12"	120	120	10'-6"
	10'			13			20			11		11"	132	132	11'-6"
	11'			13			22			11		10"	144	144	12'-6"
	12'			13			24			11	#6	12"	120	120	13'-6"
1 @ 11'	6'	#5	9½"	15	#4	12"	12	#4	12"	12	#4	12"	120	120	7'-7"
	7'			15			14			12			120	120	8'-7"
	8'			15			16			12		10"	144	144	9'-7"
	9'			15			18			12	#5	12"	120	120	10'-7"
	10'			15			20			12		11"	132	132	11'-7"
	11'			15			22			12		10"	144	144	12'-7"
	12'			15			24			12	#6	12"	120	120	13'-7"
1 @ 12'	6'	#5	9½"	16	#4	12"	12	#4	12"	13	#4	12"	120	120	7'-9"
	7'			16			14			13			120	120	8'-9"
	8'			16			16			13		10"	144	144	9'-9"
	9'			16			18			13	#5	12"	120	120	10'-9"
	10'			16			20			13		11"	132	132	11'-9"
	11'			16			22			13		10"	144	144	12'-9"
	12'			16			24			13	#6	12"	120	120	13'-9"

DIMENSIONS / QUANTITIES

Max. Design Depth of Cover (D): 5'-0"

Clear Span S	Clear Height H	Sq. Ft. Opening A	Overall Width OW	Thickness of Top Slab T	Thickness of Sidewalls C	Thickness of Bottom Slab B	Overall Height OH	Class S Conc. per Lin. Ft. of Barrel CU.YD.	Reinf. Steel per Lin. Ft. of Barrel LB.	Additional per Lap LB.	Additional Two Headwalls & Aprons LB.
1 @ 4'	2'	8	5'-0"	7"	6"	6½"	3'-1½"	0.282	41.49	17.95	66.35
	3'	12	5'-0"		6"		4'-1½"	0.319	44.16	19.62	66.35
	4'	16	5'-0"		6"		5'-1½"	0.356	46.83	21.29	66.85
	5'	20	5'-0"		6"		6'-1½"	0.394	49.50	22.96	66.35
	6'	24	5'-2"		7"		7'-1½"	0.474	52.96	24.63	67.75
1 @ 5'	3'	15	6'-0"	7½"	6"	7"	4'-2½"	0.380	55.35	22.19	101.27
	4'	20	6'-0"		6"		5'-2½"	0.417	58.23	23.86	101.27
	5'	25	6'-0"		6"		6'-2½"	0.454	60.90	25.53	101.27
	6'	30	6'-2"		7"		7'-2½"	0.535	64.49	27.20	103.27
	7'	35	6'-3"		7½"		8'-2½"	0.604	67.63	28.87	104.27
1 @ 6'	3'	18	7'-0"	8"	6"	7½"	4'-3½"	0.446	66.29	24.76	118.96
	4'	24	7'-0"		6"		5'-3½"	0.483	68.96	26.43	118.96
	5'	30	7'-0"		6"		6'-3½"	0.520	71.64	28.10	118.96
	6'	36	7'-2"		7"		7'-3½"	0.602	75.31	29.77	120.96
	7'	42	7'-3"		7½"		8'-3½"	0.671	78.98	31.44	121.97
	8'	48	7'-4"		8"		9'-3½"	0.746	88.47	33.11	122.97
1 @ 7'	4'	28	8'-0"	8½"	6"	8½"	5'-5"	0.568	81.32	29.01	136.88
	5'	35	8'-0"		6"		6'-5"	0.605	84.00	30.68	136.88
	6'	42	8'-2"		7"		7'-5"	0.688	87.76	32.35	138.88
	7'	49	8'-3"		7½"		8'-5"	0.757	90.98	34.02	139.88
	8'	56	8'-4"		8"		9'-5"	0.832	96.65	35.69	140.88
	9'	63	8'-6"		9"		10'-5"	0.946	105.59	37.36	142.88
1 @ 8'	4'	32	9'-0"	9½"	6"	9½"	5'-7"	0.676	95.26	33.32	194.07
	5'	40	9'-2"		7"		6'-7"	0.754	99.12	34.99	196.80
	6'	48	9'-2"		7"		7'-7"	0.797	101.79	36.66	196.80
	7'	56	9'-3"		7½"		8'-7"	0.867	105.05	38.33	198.16
	8'	64	9'-4"		8"		9'-7"	0.942	110.81	40.00	199.52
	9'	72	9'-6"		9"		10'-7"	1.057	119.92	41.67	202.25
	10'	80	9'-8"		10"		11'-7"	1.184	126.67	43.34	204.97
1 @ 9'	5'	45	10'-2"	10"	7"	10"	6'-8"	0.844	114.72	37.56	219.61
	6'	54	10'-3"		7½"		7'-8"	0.910	118.04	39.23	220.97
	7'	63	10'-3"		7½"		8'-8"	0.957	120.71	40.90	220.97
	8'	72	10'-4"		8"		9'-8"	1.033	126.54	42.57	222.33
	9'	81	10'-6"		9"		10'-8"	1.148	135.80	44.24	225.06
	10'	90	10'-8"		10"		11'-8"	1.276	142.68	45.91	227.78
	11'	99	10'-10"		11"		12'-8"	1.416	150.40	47.58	230.51
1 @ 10'	5'	50	11'-2"	10½"	7"	11"	6'-9½"	0.957	130.64	40.13	242.64
	6'	60	11'-3"		7½"		7'-9½"	1.024	133.99	41.80	244.00
	7'	70	11'-3"		7½"		8'-9½"	1.071	136.66	43.47	244.00
	8'	80	11'-4"		8"		9'-9½"	1.147	142.55	45.14	245.36
	9'	90	11'-6"		9"		10'-9½"	1.263	151.92	46.81	248.09
	10'	100	11'-8"		10"		11'-9½"	1.391	158.89	48.48	250.81
	11'	110	11'-10"		11"		12'-9½"	1.532	166.71	50.15	253.54
	12'	120	12'-0"		12"		13'-9½"	1.685	178.67	51.82	256.26
1 @ 11'	6'	66	12'-4"	11"	8"	11½"	7'-10½"	1.153	155.16	46.12	268.62
	7'	77	12'-4"		8"		8'-10½"	1.202	157.83	47.79	268.62
	8'	88	12'-4"		8"		9'-10½"	1.252	163.06	49.46	268.62
	9'	99	12'-6"		9"		10'-10½"	1.368	172.60	51.13	271.34
	10'	110	12'-8"		10"		11'-10½"	1.497	179.70	52.80	274.07
	11'	121	12'-10"		11"		12'-10½"	1.638	187.67	54.47	276.79
	12'	132	13'-0"		12"		13'-10½"	1.792	199.79	56.14	279.52
1 @ 12'	6'	72	13'-4"	11¾"	8"	12¼"	8'-0"	1.284	172.20	48.69	357.62
	7'	84	13'-4"		8"		9'-0"	1.333	174.87	50.36	357.62
	8'	96	13'-4"		8"		10'-0"	1.383	180.15	52.03	357.62
	9'	108	13'-6"		9"		11'-0"	1.500	189.85	58.70	361.18
	10'	120	13'-8"		10"		12'-0"	1.630	197.07	55.37	364.74
	11'	132	13'-10"		11"		13'-0"	1.772	205.16	57.04	368.30
	12'	144	14'-0"		12"		14'-0"	1.926	217.95	58.71	371.86

Note-For details of wings and bar lists, see Drawing Nos. W-X002-1 or W-X002-2, W-X003-1 or W-X003-2, and W-X004-1 or W-X004-2.

BAR SIZE	PIN DIAM.	K	ADD FOR 2 HOOKS
#6	3"	5"	1'-2"
#7	3½"	5¾"	1'-4"

BENDING DIAGRAM Bars "b".

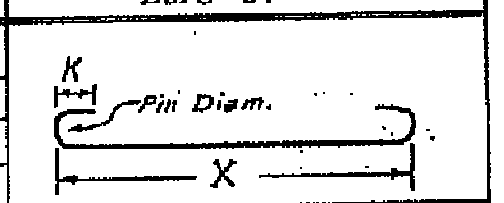

NOTE:- Dimensions are to centers of bars.

DOWEL BARS FOR TWO HEADWALLS

Bars "r" Dowel bars in Headwalls.

SPAN	SIZE	SPACING	NO. REQ'D	LENGTH	X
4'	#4	11"±	12	2'-6"	1'-3"
5'	#4	11"±	14	2'-7"	1'-3½"
6'	#4	11"±	16	2'-8"	1'-4"
7'	#4	11"±	18	2'-9"	1'-4½"
8'	#4	11½"±	20	2'-11"	1'-5½"
9'	#4	11½"±	22	3'-0"	1'-6"
10'	#4	11½"±	24	3'-1"	1'-6½"
11'	#4	12"±	26	3'-2"	1'-7"
12'	#4	12"±	28	3'-3"	1'-7½"

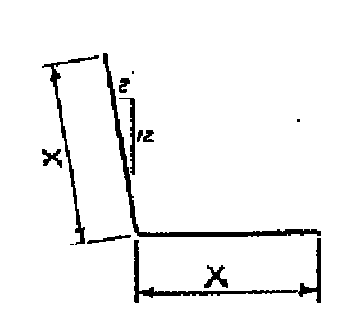

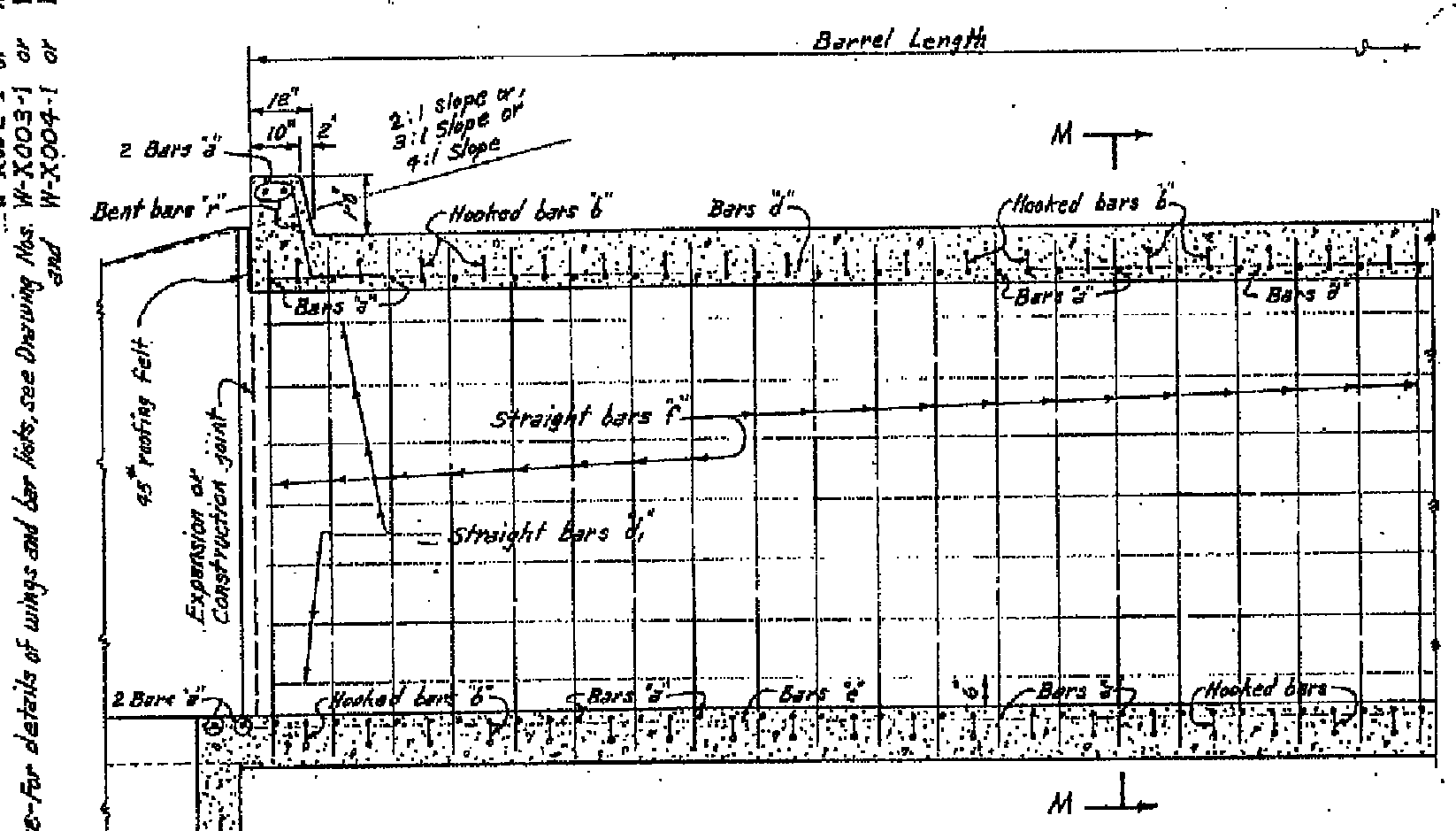

PART LONGITUDINAL SECTION

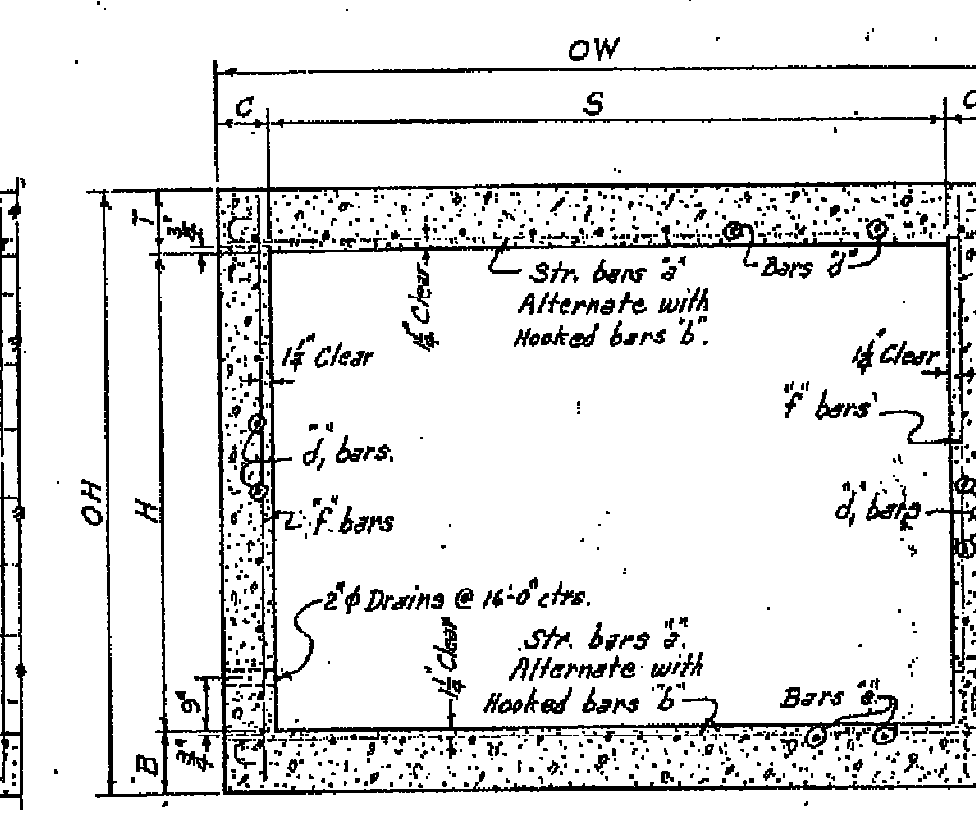

TYPICAL SECTION M-M

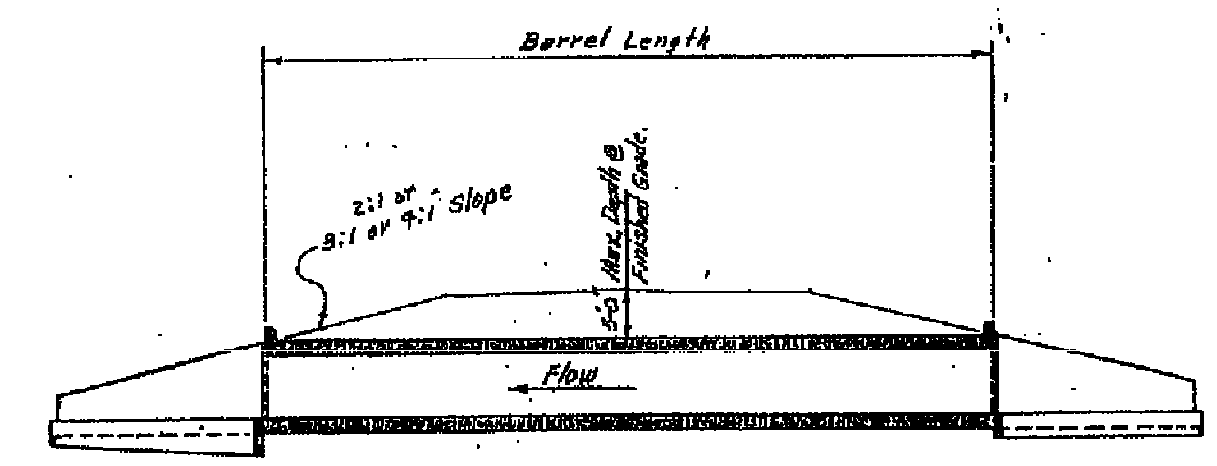

LONGITUDINAL SECTION

GENERAL NOTES:-

CONCRETE:- All concrete to be Class S, and shall be poured in the dry. All exposed corners to have ¾" chamfers.

REINFORCING STEEL:- Reinforcing to be deformed bars of intermediate or hard grade.

BAR LAP:- In computing the quantities of steel from the tables add one lap for each additional 35'-0" length of barrel over 32'-0". Lap longitudinal bars 30 diameters.

CONSTRUCTION JOINTS:- Construction joints between wingwalls, sidewalls and slabs shall be only where shown on plans.

SPECIFICATIONS:- Arkansas State Highway Commission Standard Specifications for Highway Construction and applicable Special Provisions.

DESIGN LIVE LOAD

H20-S16 LOADING A.A.S.H.O. 1961
AND
SPECIAL MILITARY LOADING
Two 24,000 Lb. Axles @ 4'-0" ctrs.

UNIT STRESSES:-
Class S Concrete (n=10) 1200#/□"
Reinforcing Steel 20,000#/□"

NOTE:- This drawing to be used in conjunction with Standard Drawing Nos. W-X003-1 or W-X003-2 and W-X004-1 or W-X004-2. Also Drawing Nos. W-X002-1 or W-X002-2.

CLASS S CONCRETE

ARKANSAS STATE HIGHWAY COMMISSION

DETAILS OF STANDARD BARREL SECTIONS
FOR
REINFORCED CONCRETE BOX CULVERTS

4',5',6',7',8',9',10',11'&12' SPANS SINGLES — 3:1 OR 4:1 SLOPES UNDER 5'-0" COVER

STANDARD DRAWING NO. R-100X-0

Designed By:- W.C.H. 1-23-63. Checked By:- RHS 5-8-63
Drawn By:- W.C.H. 2-8-63. Checked By:- RHS 5-24-63
Quantities By:- W.C.H. 2-12-63. Checked By:- RHS 5-24-63