DATE REVISED	DATE REVISED	FED.RD. DIST.NO.	STATE	JOB NO.	SHEET NO.	TOTAL SHEETS
		6	ARK.	040792	1	122
		HWY. 45 STRS. & APPRS. (S)				

ARKANSAS DEPARTMENT OF TRANSPORTATION
CONSTRUCTION PLANS FOR STATE HIGHWAY

AR DOT

HWY. 45 STRS. & APPRS. (S)

SEBASTIAN COUNTY
ROUTE 45 SECTION 1

JOB 040792

FED. AID PROJ. NHPP-0065(56)

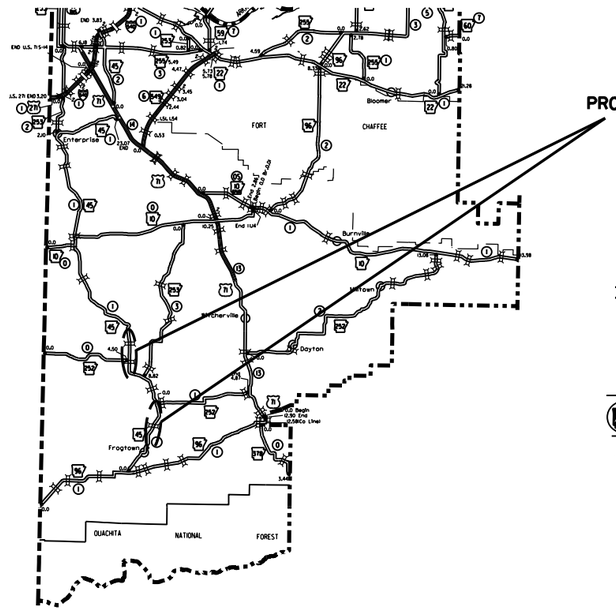

VICINITY MAP



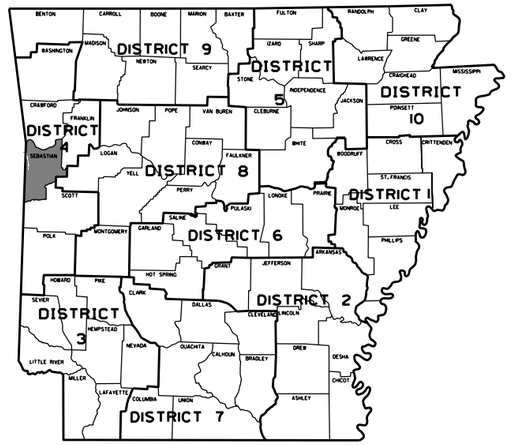

ARK. HWY. DIST. NO. 4

BRIDGE INFORMATION

(1) STA. 109+30.97 BRIDGE END
BRIDGE NO. 07567
185'-0" CONTINUOUS W-BEAM UNIT
(3 SPANS @ 60'-65'-60')
34'-0" CLEAR ROADWAY
188'-¾" TOTAL BRIDGE LENGTH
STA. 111+19.03 BRIDGE END

(2) STA. 309+67.50 BRIDGE END
BRIDGE NO. 07568
175'-0" INTEGRAL CONTINUOUS
W-BEAM UNIT (3 SPANS @ 55'-65'-55')
34'-0" CLEAR ROADWAY
176'-0" TOTAL BRIDGE LENGTH
STA. 311+43.50 BRIDGE END

STRUCTURES OVER 20'-0" SPAN

(3) STA. 507+45 CONSTRUCT
QUAD. 12' X 9' X 103' R.C. BOX CULVERT
WITH 3:1 WINGS LT. AND RT.
Q25 = 1060 CFS, D.A. = 1.75 SQ. MI.
SPAN = 51'-4"

STA. 501+00.00
BEGIN SITE 3
LOG MILE 7.54

NOT TO SCALE

STA. 513+75.00
END SITE 3
END JOB 040792

STA. 316+00.00
END SITE 2

STA. 303+00.00
BEGIN SITE 2
LOG MILE 6.68

STA. 121+22.03
END SITE 1

STA. 100+00.00
BEGIN JOB 040792
BEGIN SITE 1
LOG MILE 2.60

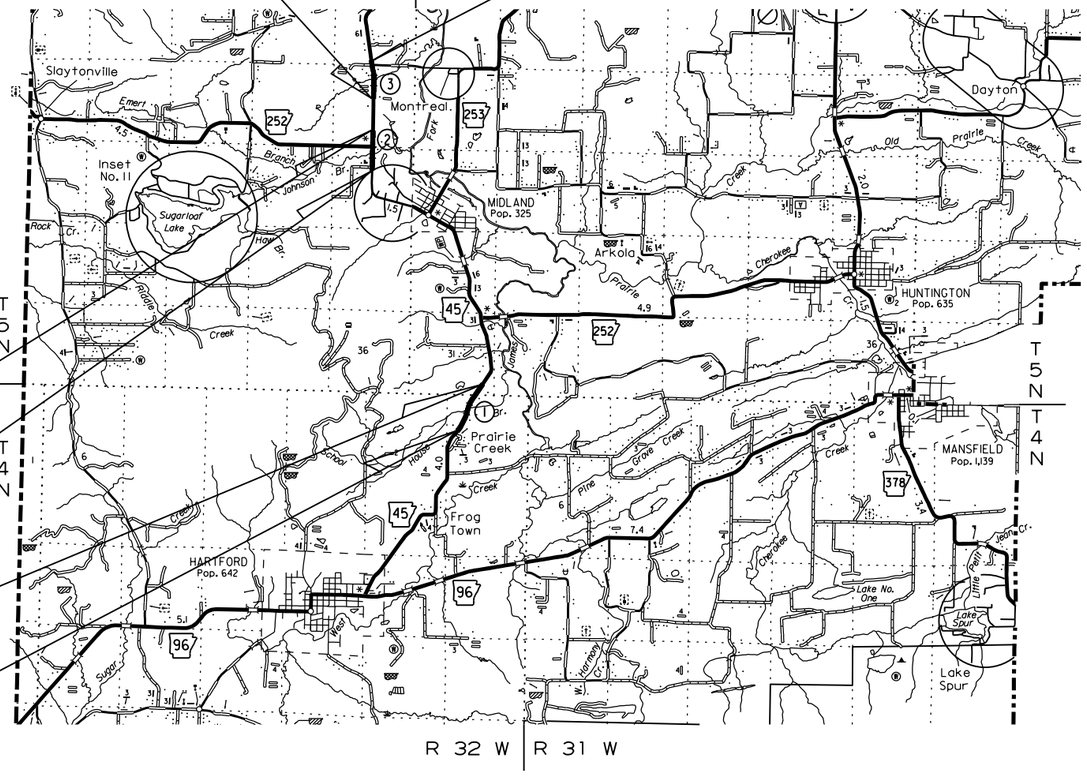

DESIGN TRAFFIC DATA

DESIGN YEAR	2044
2024 ADT	1,900
2044 ADT	2,200
2044 DHV	242
DIRECTIONAL DISTRIBUTION	0.60
TRUCKS	5%
DESIGN SPEED	55 MPH



APPROVED

STATE OF ARKANSAS
LICENSED PROFESSIONAL ENGINEER
No. 14276
JARED D. WILEY

Date: 2024.08.14 16:23:14-05'00'

CHIEF ENGINEER - PRECONSTRUCTION

	BEGIN PROJECT	MID-POINT OF PROJECT	END PROJECT
LATITUDE	N 35°03'18"	N 35°05'12"	N 35°07'05"
LONGITUDE	W 94°20'55"	W 94°21'29"	W 94°22'02"

LENGTH OF PROJECT CALCULATED ALONG C.L.

GROSS LENGTH OF	PROJECT	4697.03	FEET	OR	0.890	MILES
NET	ROADWAY	4281.64			0.811	MILES
NET	BRIDGES	415.39			0.079	MILES
NET	PROJECT	4697.03			0.890	MILES

BA42315 6/28/2024
R040792.DGN

DATE REVISED	DATE FILMED	DATE REVISED	DATE FILMED

FED.RD. DIST.NO.	STATE	FED.AID PROJ.NO.	SHEET NO.	TOTAL SHEETS
6	ARK.			
JOB NO.		040792	2	122

(2) INDEX OF SHEETS AND STANDARD DRAWINGS

STATE OF ARKANSAS
LICENSED PROFESSIONAL ENGINEER
No. 11425
TRINITY D. SMITH

Digitally signed by Trinity Smith
Date: 2024.08.15 14:57:37-05'00'

INDEX OF SHEETS

SHEET NO.	TITLE	BRIDGE NO.	DRWG.NO.
1	TITLE SHEET		
2	INDEX OF SHEETS AND STANDARD DRAWINGS		
3	GOVERNING SPECIFICATIONS AND GENERAL NOTES		
4 - 10	TYPICAL SECTIONS OF IMPROVEMENT		
11 - 21	SPECIAL DETAILS		
22 - 33	TEMPORARY EROSION CONTROL DETAILS		
34 - 45	MAINTENANCE OF TRAFFIC DETAILS		
46 - 48	PERMANENT PAVEMENT MARKING DETAILS		
49 - 53	QUANTITIES		
54	SCHEDULE OF BRIDGE QUANTITIES	07567, 07568	64502
55	SUMMARY OF QUANTITIES AND REVISIONS		
56 - 59	SURVEY CONTROL DETAILS		
60 - 66	PLAN AND PROFILE SHEETS		
67	LAYOUT OF BRIDGE HIGHWAY 45 OVER SCHOOL HOUSE BRANCH (SHEET 1 OF 2)	07567	64503
68	LAYOUT OF BRIDGE HIGHWAY 45 OVER SCHOOL HOUSE BRANCH (SHEET 2 OF 2)	07567	64504
69	DETAILS OF END BENTS (SHEET 1 OF 5)	07567	64505
70	DETAILS OF END BENTS (SHEET 2 OF 5)	07567	64506
71	DETAILS OF END BENTS (SHEET 3 OF 5)	07567	64507
72	DETAILS OF END BENTS (SHEET 4 OF 5)	07567	64508
73	DETAILS OF END BENTS (SHEET 5 OF 5)	07567	64509
74	DETAILS OF INTERMEDIATE BENTS (SHEET 1 OF 3)	07567	64510
75	DETAILS OF INTERMEDIATE BENTS (SHEET 2 OF 3)	07567	64511
76	DETAILS OF INTERMEDIATE BENTS (SHEET 3 OF 3)	07567	64512
77	DETAILS OF ELASTOMERIC BEARINGS	07567, 07568	64513
78	DETAILS OF 185'-0" CONTINUOUS W-BEAM UNIT (SHEET 1 OF 4)	07567	64514
79	DETAILS OF 185'-0" CONTINUOUS W-BEAM UNIT (SHEET 2 OF 4)	07567	64515
80	DETAILS OF 185'-0" CONTINUOUS W-BEAM UNIT (SHEET 3 OF 4)	07567	64516
81	DETAILS OF 185'-0" CONTINUOUS W-BEAM UNIT (SHEET 4 OF 4)	07567	64517
82	LAYOUT OF BRIDGE HIGHWAY 45 OVER JOHNSON BRANCH (SHEET 1 OF 2)	07568	64518
83	LAYOUT OF BRIDGE HIGHWAY 45 OVER JOHNSON BRANCH (SHEET 2 OF 2)	07568	64519
84	DETAILS OF END BENTS	07568	64520
85	DETAILS OF INTERMEDIATE BENTS (SHEET 1 OF 2)	07568	64521
86	DETAILS OF INTERMEDIATE BENTS (SHEET 2 OF 2)	07568	64522
87	DETAILS OF 175'-0" INTEGRAL CONTINUOUS W-BEAM UNIT (SHEET 1 OF 7)	07568	64523
88	DETAILS OF 175'-0" INTEGRAL CONTINUOUS W-BEAM UNIT (SHEET 2 OF 7)	07568	64524
89	DETAILS OF 175'-0" INTEGRAL CONTINUOUS W-BEAM UNIT (SHEET 3 OF 7)	07568	64525
90	DETAILS OF 175'-0" INTEGRAL CONTINUOUS W-BEAM UNIT (SHEET 4 OF 7)	07568	64526
91	DETAILS OF 175'-0" INTEGRAL CONTINUOUS W-BEAM UNIT (SHEET 5 OF 7)	07568	64527
92	DETAILS OF 175'-0" INTEGRAL CONTINUOUS W-BEAM UNIT (SHEET 6 OF 7)	07568	64528
93	DETAILS OF 175'-0" INTEGRAL CONTINUOUS W-BEAM UNIT (SHEET 7 OF 7)	07568	64529
94 - 122	CROSS SECTIONS		

NOTE: CROSS SECTIONS NOT NORMALLY INCLUDED IN PLANS SOLD TO PROSPECTIVE BIDDERS, BUT MAY BE HAD UPON REQUEST.

ROADWAY STANDARD DRAWINGS

DRWG.NO.	TITLE	DATE
CDP-1	CONCRETE DITCH PAVING	12-08-16
DR-2	DETAILS OF DRIVEWAYS & STREET TURNOUTS	05-19-22
FES-1	FLARED END SECTION	10-18-96
FES-2	FLARED END SECTION	10-18-96
GR-6	GUARDRAIL DETAILS	05-19-22
GR-7	GUARDRAIL DETAILS	11-07-19
GR-8	GUARDRAIL DETAILS	11-07-19
GR-9	GUARDRAIL DETAILS	11-07-19
GR-10	GUARDRAIL DETAILS	11-07-19
GR-11	GUARDRAIL DETAILS	11-07-19
GR-12	GUARDRAIL DETAILS	05-14-20
MB-1	MAILBOX DETAILS	11-18-04
PBC-1	PRECAST CONCRETE BOX CULVERTS	01-28-15
PCC-1	CONCRETE PIPE CULVERT FILL HEIGHTS & BEDDING	02-27-14
PCM-1	METAL PIPE CULVERT FILL HEIGHTS & BEDDING	02-27-14
PCP-1	PLASTIC PIPE CULVERT (HIGH DENSITY POLYETHYLENE)	02-27-14
PCP-2	PLASTIC PIPE CULVERT (PVC F949)	02-27-14
PCP-3	PLASTIC PIPE CULVERT (POLYPROPYLENE)	02-27-20
PM-1	PAVEMENT MARKING DETAILS	02-27-20
PU-1	DETAILS OF PIPE UNDERDRAIN	12-08-16
RCB-1	REINFORCED CONCRETE BOX CULVERT DETAILS	07-26-12
RCB-2	EXCAVATION PAY LIMITS, BACKFILL, & SOLID SODDING FOR BOX CULVERTS	11-20-03
SE-2	TABLES AND METHOD OF SUPERELEVATION FOR TWO-WAY TRAFFIC	11-07-19
SI-1	DETAILS OF SPECIAL ITEMS	10-25-18
TC-1	STANDARD TRAFFIC CONTROLS FOR HIGHWAY CONSTRUCTION	11-07-19
TC-2	STANDARD TRAFFIC CONTROLS FOR HIGHWAY CONSTRUCTION	05-20-21
TC-3	STANDARD TRAFFIC CONTROLS FOR HIGHWAY CONSTRUCTION	08-12-21
TC-4	STANDARD TRAFFIC CONTROLS FOR HIGHWAY CONSTRUCTION-TEMPORARY PRECAST BARRIER	11-07-19
TC-5	STANDARD TRAFFIC CONTROLS FOR HIGHWAY CONSTRUCTION-TEMPORARY PRECAST BARRIER	11-07-19
TEC-1	TEMPORARY EROSION CONTROL DEVICES	11-16-17
TEC-2	TEMPORARY EROSION CONTROL DEVICES	06-02-94
TEC-3	TEMPORARY EROSION CONTROL DEVICES	11-03-94
WF-2	WIRE FENCE WATER GAPS	04-20-79
WF-4	WIRE FENCE TYPE C AND D	08-22-02

BRIDGE STANDARD DRAWINGS

DRWG.NO.	TITLE	DATE
55000	STANDARD DETAILS FOR EMBANKMENT CONSTRUCTION AND BACKFILL AT BRIDGE ENDS	02-27-14
55001	STANDARD DETAILS FOR DUMPED RIPRAP AND FILTER BLANKET AND COMPUTING EXCAVATION FOR STRUCTURES	02-27-14
55005	STANDARD DETAILS FOR PERMANENT STEEL BRIDGE DECK FORMS FOR STEEL & CONCRETE GIRDER SPANS	03-24-16
55006	STANDARD GENERAL NOTES FOR STEEL BRIDGE STRUCTURES	09-02-15
55007	STANDARD DETAILS FOR STEEL BRIDGE STRUCTURES	02-11-16
55008	STANDARD DETAILS FOR POURED SILICONE JOINTS	02-11-16
55010	STANDARD DETAILS FOR TYPE D BRIDGE NAME PLATE	04-14-23
55030F	STANDARD DETAILS FOR TYPE F APPROACH GUTTERS	09-07-23
55040F1	STANDARD DETAILS FOR TYPE F APPROACH SLAB	09-07-23
55050	STANDARD DETAILS FOR TEMPORARY BRIDGE STRUCTURE TIMBER SPANS 20' ROADWAY WIDTH (SHEET 1 OF 2)	04-17-14
55051	STANDARD DETAILS FOR TEMPORARY BRIDGE STRUCTURE TIMBER SPANS 20' ROADWAY WIDTH (SHEET 2 OF 2)	04-17-14
55052	STANDARD DETAILS FOR TEMPORARY BRIDGE STRUCTURE PRECAST CONCRETE SPANS 20' ROADWAY WIDTH (SHEET 1 OF 2)	04-17-14
55053	STANDARD DETAILS FOR TEMPORARY BRIDGE STRUCTURE PRECAST CONCRETE SPANS 20' ROADWAY WIDTH (SHEET 2 OF 2)	04-17-14
55054	STANDARD DETAILS FOR TEMPORARY BRIDGE STRUCTURE BRIDGE END PROTECTION SYSTEM	04-17-14
55055	STANDARD DETAILS FOR TEMPORARY BRIDGE STRUCTURE PRECAST CONCRETE SPANS 24' ROADWAY WIDTH (SHEET 1 OF 2)	04-17-14
55056	STANDARD DETAILS FOR TEMPORARY BRIDGE STRUCTURE PRECAST CONCRETE SPANS 24' ROADWAY WIDTH (SHEET 2 OF 2)	04-17-14
55057	STANDARD DETAILS FOR TEMPORARY BRIDGE STRUCTURE TIMBER SPANS 24' ROADWAY WIDTH (SHEET 1 OF 2)	04-17-14
55070	STANDARD DETAILS FOR BRIDGE TRAFFIC RAIL TYPE SSTR36	09-27-22
55081	STANDARD DETAILS FOR 25'-0" PRECAST CONCRETE SPANS 28'-0" AND 24'-6" CLEAR ROADWAYS	05-24-17
55082	STANDARD DETAILS FOR 31'-0" PRECAST CONCRETE SPANS 28'-0" AND 24'-6" CLEAR ROADWAYS	05-24-17
55083	STANDARD DETAILS FOR PRECAST PARAPET RAILS FOR 19'-0", 25'-0", AND 31'-0" PRECAST END SPANS	02-11-16

RD38049 8/7/2024
R040792.DGN

INDEX OF SHEETS AND STANDARD DRAWINGS

DATE REVISED	DATE FILMED	DATE REVISED	DATE FILMED	FED.RD. DIST.NO.	STATE	FED.AID PROJ.NO.	SHEET NO.	TOTAL SHEETS
09/06/2024				6	ARK.			
				JOB NO.		040792	3	122

(2) GOVERNING SPECIFICATIONS AND GENERAL NOTES

STATE OF ARKANSAS
LICENSED
PROFESSIONAL
ENGINEER
No. 11425
TRINITY D. SMITH

GOVERNING SPECIFICATIONS

ARKANSAS STATE HIGHWAY COMMISSION STANDARD SPECIFICATIONS FOR HIGHWAY CONSTRUCTION, EDITION OF 2014, AND THE FOLLOWING SPECIAL PROVISIONS AND SUPPLEMENTAL SPECIFICATIONS:

NUMBER	TITLE
ERRATA_____	ERRATA FOR THE BOOK OF STANDARD SPECIFICATIONS
FHWA-1273__	REQUIRED CONTRACT PROVISIONS FEDERAL-AID CONSTRUCTION CONTRACTS
FHWA-1273__	SUPPLEMENT - EQUAL EMPLOYMENT OPPORTUNITY - NOTICE TO CONTRACTORS
FHWA-1273__	SUPPLEMENT - SPECIFIC EQUAL EMPLOYMENT OPPORTUNITY RESPONSIBILITIES (23 U.S.C. 140)
FHWA-1273__	SUPPLEMENT - EQUAL EMPLOYMENT OPPORTUNITY - GOALS AND TIMETABLES
FHWA-1273__	SUPPLEMENT - EQUAL EMPLOYMENT OPPORTUNITY - FEDERAL STANDARDS
FHWA-1273__	SUPPLEMENT - POSTERS AND NOTICES REQUIRED FOR FEDERAL-AID PROJECTS
FHWA-1273__	SUPPLEMENT - WAGE RATE DETERMINATION
FHWA-1273__	SUPPLEMENT - TRAINING PROGRAM - JOB NUMBER 040792
100-3_____	CONTRACTOR'S LICENSE
100-4_____	DEPARTMENT NAME CHANGE
102-2_____	ISSUANCE OF PROPOSALS
102-3_____	PREQUALIFICATION OF BIDDERS
103-2_____	CONTACT INFORMATION FOR MOTORIST DAMAGE CLAIMS
105-4_____	MAINTENANCE DURING CONSTRUCTION
107-2_____	RESTRAINING CONDITIONS
108-1_____	LIQUIDATED DAMAGES
108-2_____	WORK ALLOWED PRIOR TO ISSUANCE OF WORK ORDER
110-1_____	PROTECTION OF WATER QUALITY AND WETLANDS
210-1_____	UNCLASSIFIED EXCAVATION
303-1_____	AGGREGATE BASE COURSE
306-1_____	QUALITY CONTROL AND ACCEPTANCE
307-2_____	CEMENT TREATED BASE COURSE
308-2_____	CEMENT STABILIZED CRUSHED STONE BASE COURSE
400-1_____	TACK COATS
400-4_____	DESIGN AND QUALITY CONTROL OF ASPHALT MIXTURES
400-5_____	PERCENT AIR VOIDS FOR ACHM MIX DESIGNS
400-6_____	LIQUID ANTI-STRIP ADDITIVE
400-7_____	TRACKLESS TACK
404-3_____	DESIGN OF ASPHALT MIXTURES
409-2_____	ASPHALT LABORATORY FACILITY
410-1_____	CONSTRUCTION REQUIREMENTS AND ACCEPTANCE OF ASPHALT CONCRETE PLANT MIX COURSES
410-2_____	DEVICES FOR MEASURING DENSITY FOR ROLLING PATTERNS
410-4_____	EVALUATION OF ACHM SUBLOT REPLACEMENT PATTERNS
416-1_____	RECYCLED ASPHALT PAVEMENT
501-3_____	PORTLAND CEMENT CONCRETE PAVEMENT
600-2_____	INCIDENTAL CONSTRUCTION
603-1_____	LANE CLOSURE NOTIFICATION
604-1_____	RETROREFLECTIVE SHEETING FOR TRAFFIC CONTROL DEVICES IN CONSTRUCTION ZONES
604-3_____	TRAFFIC CONTROL DEVICES IN CONSTRUCTION ZONES (MASH)
605-1_____	CONCRETE DITCH PAVING
606-1_____	PIPE CULVERTS FOR SIDE DRAINS
617-1_____	GUARDRAIL TERMINAL (TYPE 2)
617-2_____	GUARDRAIL DELINEATORS
619-1_____	FENCES
620-1_____	MULCH COVER
637-1_____	MAILBOXES
800-1_____	STRUCTURES
802-3_____	CONCRETE FOR STRUCTURES
802-5_____	CONCRETE FOR STRUCTURES
804-2_____	REINFORCING STEEL FOR STRUCTURES
807-2_____	STEEL STRUCTURES
808-1_____	INSTALLATION OF ELASTOMERIC BEARINGS
808-2_____	ELASTOMERIC BEARINGS
JOB 040792__	BIDDING REQUIREMENTS AND CONDITIONS
JOB 040792__	BROADBAND INTERNET SERVICE FOR ASPHALT CONCRETE PLANT
JOB 040792__	BROADBAND INTERNET SERVICE FOR FIELD OFFICE
JOB 040792__	BUY AMERICA - CONSTRUCTION MATERIALS
JOB 040792__	CARGO PREFERENCE ACT REQUIREMENTS
JOB 040792__	CLASS C FLY ASH IN PORTLAND CEMENT CONCRETE PAVEMENT AND CLASS S(AE) CONCRETE
JOB 040792__	COLD MILLING - COUNTY PROPERTY
JOB 040792__	CONCRETE BRIDGE DECK CURING AND SURFACE TREATMENT RESTRICTIONS
JOB 040792__	CONSTRUCTION IN SPECIAL FLOOD HAZARD AREAS
JOB 040792__	CONSTRUCTION PROJECT INFORMATION SIGN
JOB 040792__	DESIGN AND QUALITY CONTROL OF ASPHALT MIXTURES
JOB 040792__	DESIGN OF ASPHALT MIXTURES - AGGREGATES
JOB 040792__	DIRECT TENSION INDICATORS FOR HIGH STRENGTH BOLT ASSEMBLIES
JOB 040792__	DISADVANTAGED BUSINESS ENTERPRISE BIDDER'S RESPONSIBILITIES
JOB 040792__	FLEXIBLE BEGINNING OF WORK – CALENDAR DAY CONTRACT
JOB 040792__	GOALS FOR DISADVANTAGED BUSINESS ENTERPRISE PARTICIPATON
JOB 040792__	LIQUIDATED DAMAGES PROCEDURE FOR BID LETTING
JOB 040792__	MANDATORY ELECTRONIC CONTRACT
JOB 040792__	MANDATORY ELECTRONIC DOCUMENT SUBMITTAL
JOB 040792__	NESTING SITES OF MIGRATORY BIRDS
JOB 040792__	PARTNERING REQUIREMENTS
JOB 040792__	PERCENT AIR VOIDS AND NDESIGN FOR ACHM SURFACE MIX DESIGNS
JOB 040792__	PLASTIC PIPE
JOB 040792__	PRICE ADJUSTMENT FOR ASPHALT BINDER
JOB 040792__	PRICE ADJUSTMENT FOR FUEL
JOB 040792__	PROHIBITION OF CERTAIN TELECOMMUNICATIONS AND VIDEO SURVEILLANCE SERVICES OR EQUIPMENT
JOB 040792__	SEQUENCE OF WORK
JOB 040792__	SHORING FOR CULVERTS
JOB 040792__	SOIL STABILIZATION
JOB 040792__	STORM WATER POLLUTION PREVENTION PLAN
JOB 040792__	SUBMISSION OF ASPHALT CONCRETE HOT MIX ACCEPTANCE TEST RESULTS
JOB 040792__	UTILITY ADJUSTMENTS
JOB 040792__	VALUE ENGINEERING
JOB 040792__	WARM MIX ASPHALT

GENERAL NOTES

1. GRADE LINE DENOTES FINISHED GRADE WHERE SHOWN ON PLANS.
2. ALL PIPE LINES, POWER, TELEPHONE, AND TELEGRAPH LINES TO BE MOVED OR LOWERED BY THE RESPECTIVE OWNERS AS PER AGREEMENT WITH SUCH OWNERS.
3. ANY EQUIPMENT OR APPURTENANCE THAT INTERFERES WITH THE PROPOSED CONSTRUCTION AND WHICH MAY BE THE PROPERTY OF UTILITY SERVICE ORGANIZATIONS SHALL BE MOVED BY THE OWNERS UNLESS OTHERWISE PROVIDED.
4. THE CONTRACTOR SHALL BE RESPONSIBLE FOR MAINTAINING U. S. MAILBOXES WITHIN THE PROJECT LIMITS IN SUCH A MANNER THAT THE PUBLIC MAY RECEIVE CONTINUED MAIL SERVICE. PAYMENT WILL BE CONSIDERED INCLUDED IN THE PRICE BID FOR THE VARIOUS BID ITEMS.
5. ALL LAND MONUMENTS LOCATED WITHIN THE CONSTRUCTION AREA SHALL BE PROTECTED IN ACCORDANCE WITH SECTION 107.12 OF THE STANDARD SPECIFICATIONS.
6. ALL TREES THAT DO NOT DIRECTLY INTERFERE WITH THE PROPOSED CONSTRUCTION SHALL BE SPARED AS DIRECTED BY THE ENGINEER. CARE AND DISCRETION SHALL BE USED TO ENSURE THAT ALL TREES NOT TO BE REMOVED SHALL BE HARMED AS LITTLE AS POSSIBLE DURING THE CONSTRUCTION OPERATIONS.
7. THE CONTRACTOR SHALL BE RESPONSIBLE FOR PROVIDING A FENCE TO CONTROL LIVESTOCK IN AREAS WHERE PASTURES ARE SEVERED. WIRE FENCE MAY BE CONSTRUCTED INITIALLY, OR IN LIEU THEREOF, THE CONTRACTOR AT HIS OWN EXPENSE, MAY ELECT TO PROVIDE TEMPORARY FENCING SUITABLE TO CONTAIN LIVESTOCK.
8. THE SEQUENCE AS SHOWN ON THE MAINTENANCE OF TRAFFIC PLANS IS A GENERAL OUTLINE FOR THE CONSTRUCTION OF THIS PROJECT, AND IN NO WAY IS IT INTENDED TO COVER EVERY ITEM IN THE PROJECT. ITEMS NOT CRITICAL TO THE CONSTRUCTION SEQUENCE MAY BE CONSTRUCTED IN ANY STAGE AS APPROVED BY THE RESIDENT ENGINEER.
9. ALL FLEXIBLE BASE AND ASPHALTIC PAVEMENTS REMOVED SHALL BE PAID FOR UNDER THE ITEM NO. 210 - UNCLASSIFIED EXCAVATION.
10. THE EXISTING ASPHALT PAVEMENT TO BE REMOVED FROM THE REMAINING PAVEMENT SHALL BE SEPARATED BY SAWING ALONG A NEAT LINE. AFTER SAWING, THE PAVEMENT TO BE REMOVED SHALL BE CAREFULLY REMOVED IN A MANNER THAT WILL NOT DAMAGE THE PAVEMENT THAT IS TO REMAIN. ANY DAMAGE OF THE ASPHALT PAVEMENT THAT IS TO REMAIN IN PLACE SHALL BE REPAIRED AT THE CONTRACTOR'S EXPENSE.
11. THIS PROJECT IS COVERED UNDER A SECTION 404 NATIONWIDE 14 PERMIT. REFER TO SECTION 110 OF THE STANDARD SPECIFICATIONS, EDITION OF 2014, FOR PERMIT REQUIREMENTS.

BA42315 9/6/2024
R040792.DGN

DATE REVISED	DATE FILMED	DATE REVISED	DATE FILMED	FED.RD. DIST.NO.	STATE	FED.AID PROJ.NO.	SHEET NO.	TOTAL SHEETS
				6	ARK.			
				JOB NO.		040792	4	122

(2) TYPICAL SECTIONS OF IMPROVEMENT

STATE OF ARKANSAS
LICENSED PROFESSIONAL ENGINEER
No. 11425
TRINITY D. SMITH
08-15-2024

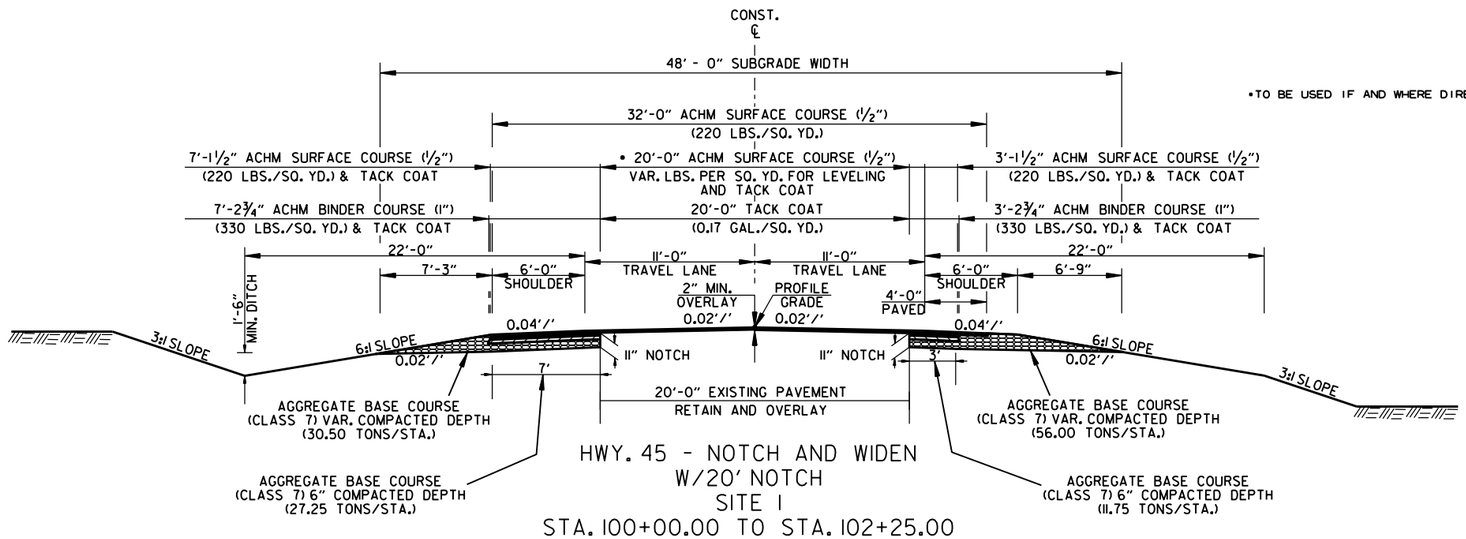

HWY. 45 - NOTCH AND WIDEN
W/20' NOTCH
SITE 1
STA. 100+00.00 TO STA. 102+25.00
STA. 117+70.00 TO STA. 121+22.03

•TO BE USED IF AND WHERE DIRECTED BY THE ENGINEER.

NOTES:
THE THICKNESS OF AGGREGATE BASE COURSE SHALL BE WITHIN PLUS OR MINUS ONE INCH OF THE PLAN THICKNESS SHOWN. THE CONTRACTOR WILL CORRECT ANY DEFICIENT THICKNESS THAT DOES NOT MEET TOLERANCE INDICATED. PAYMENT WILL NOT BE MADE FOR MATERIAL PLACED IN EXCESS OF THE TOLERANCE INDICATED.

REFER TO CROSS SECTIONS FOR DEVATION FROM THE NORMAL SLOPES. NO CHANGES SHALL BE MADE FROM THE PLANNED SLOPES WITHOUT THE APPROVAL OF THE ENGINEER.

THE FINAL 2" OF SURFACE COURSE IS TO BE PLACED AFTER ALL OTHER COURSES HAVE BEEN LAID. LONGITUDINAL JOINTS SHALL BE AT LANE LINES.

ASPHALT FOR LEVELING OF EXISTING PAVEMENT SHALL BE PLACED ONLY IF AND WHERE DIRECTED BY THE ENGINEER. CALCULATIONS FOR THE AMOUNT OF LEVELING AND LEVELING OPERATIONS SHALL BE PERFORMED BEFORE CONSTRUCTING NOTCH AND WIDENING. CALCULATIONS WILL NOT BE PAID FOR DIRECTLY, BUT PAYMENT WILL BE CONSIDERED INCLUDED IN THE VARIOUS PAY ITEMS.

WITH THE APPROVAL OF THE ENGINEER, THE CONTRACTOR WILL BE ALLOWED TO SUBSTITUTE, AT NO ADDITIONAL COST TO THE DEPARTMENT, THE FIRST LIFT OF ACHM SURFACE COURSE (1/2") IN LIEU OF AGGREGATE BASE COURSE ON THE SHOULDERS.

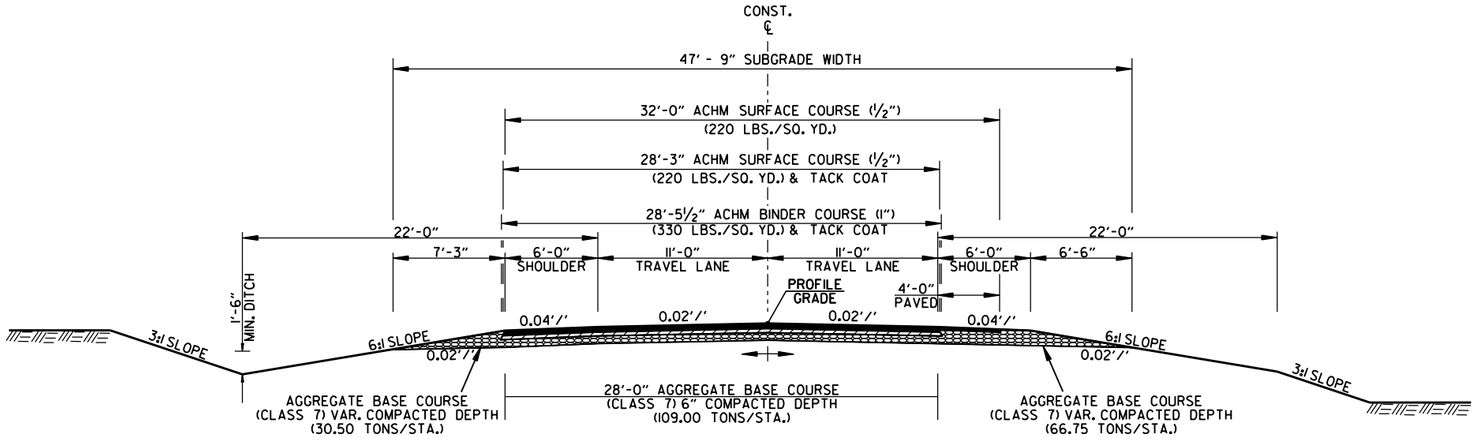

HWY. 45 - FULL DEPTH
SITE 1
STA. 102+25.00 TO STA. 109+30.97
STA. 111+19.03 TO STA. 117+70.00

RD38049 8/7/2024
R040792.DGN

TYPICAL SECTIONS OF IMPROVEMENT

DATE REVISED	DATE FILMED	DATE REVISED	DATE FILMED

FED.RD. DIST.NO.	STATE	FED.AID PROJ.NO.	SHEET NO.	TOTAL SHEETS
6	ARK.			
JOB NO.		040792	5	122

(2) TYPICAL SECTIONS OF IMPROVEMENT

STATE OF ARKANSAS
LICENSED PROFESSIONAL ENGINEER
No. 11425
TRINITY D. SMITH

08-15-2024

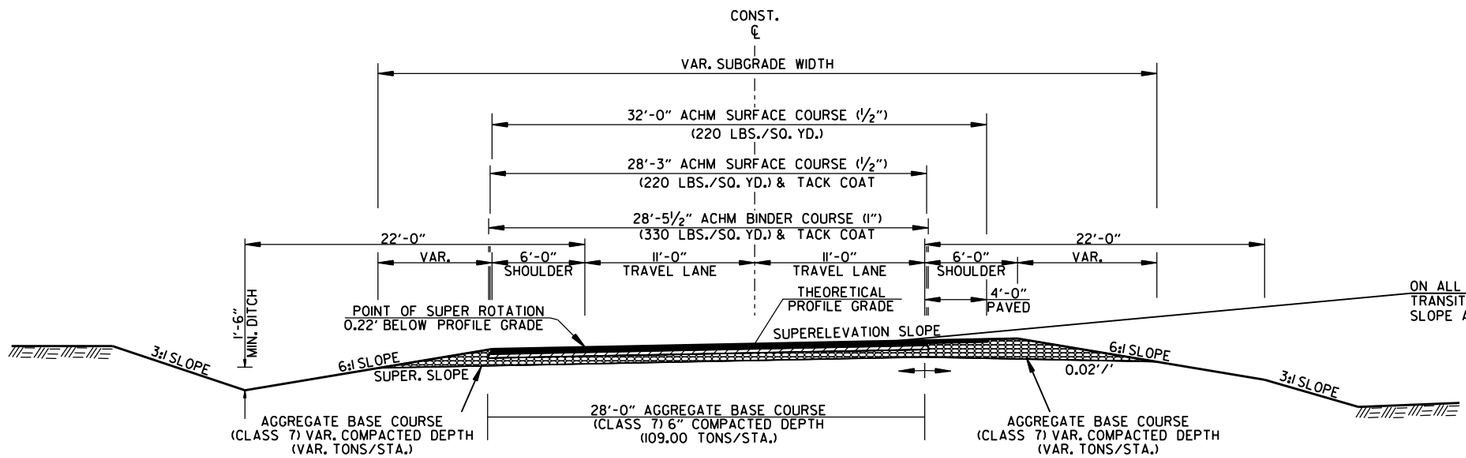

HWY. 45 - FULL DEPTH
SITE I
SUPERELEVATION

ON ALL SUPERELEVATED CURVES AND THRU SUPERELEVATION TRANSITIONS THE ALGEBRAIC DIFFERENCE BETWEEN PAVEMENT SLOPE AND SHOULDER SLOPE SHALL NOT EXCEED 0.08'/'

NOTES:
THE THICKNESS OF AGGREGATE BASE COURSE SHALL BE WITHIN PLUS OR MINUS ONE INCH OF THE PLAN THICKNESS SHOWN. THE CONTRACTOR WILL CORRECT ANY DEFICIENT THICKNESS THAT DOES NOT MEET TOLERANCE INDICATED. PAYMENT WILL NOT BE MADE FOR MATERIAL PLACED IN EXCESS OF THE TOLERANCE INDICATED.

REFER TO CROSS SECTIONS FOR DEVATION FROM THE NORMAL SLOPES. NO CHANGES SHALL BE MADE FROM THE PLANNED SLOPES WITHOUT THE APPROVAL OF THE ENGINEER.

THE FINAL 2" OF SURFACE COURSE IS TO BE PLACED AFTER ALL OTHER COURSES HAVE BEEN LAID. LONGITUDINAL JOINTS SHALL BE AT LANE LINES.

ASPHALT FOR LEVELING OF EXISTING PAVEMENT SHALL BE PLACED ONLY IF AND WHERE DIRECTED BY THE ENGINEER. CALCULATIONS FOR THE AMOUNT OF LEVELING AND LEVELING OPERATIONS SHALL BE PERFORMED BEFORE CONSTRUCTING NOTCH AND WIDENING. CALCULATIONS WILL NOT BE PAID FOR DIRECTLY, BUT PAYMENT WILL BE CONSIDERED INCLUDED IN THE VARIOUS PAY ITEMS.

WITH THE APPROVAL OF THE ENGINEER, THE CONTRACTOR WILL BE ALLOWED TO SUBSTITUTE, AT NO ADDITIONAL COST TO THE DEPARTMENT, THE FIRST LIFT OF ACHM SURFACE COURSE (1/2") IN LIEU OF AGGREGATE BASE COURSE ON THE SHOULDERS.

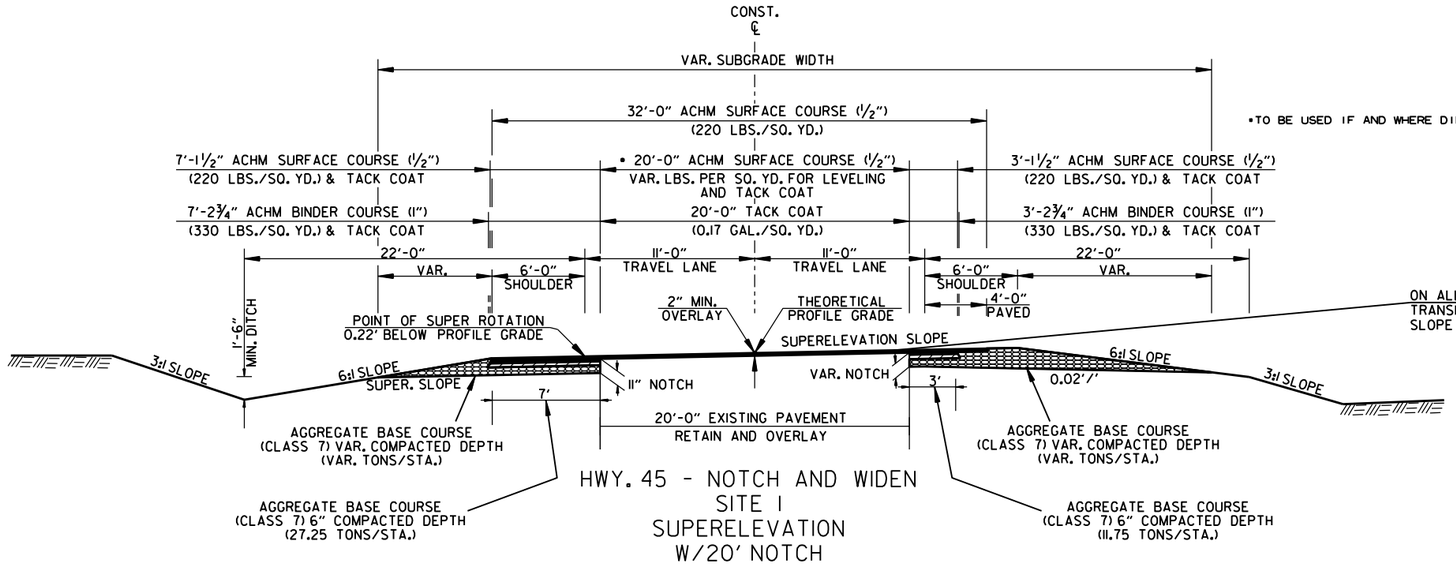

•TO BE USED IF AND WHERE DIRECTED BY THE ENGINEER.

HWY. 45 - NOTCH AND WIDEN
SITE I
SUPERELEVATION
W/20' NOTCH

ON ALL SUPERELEVATED CURVES AND THRU SUPERELEVATION TRANSITIONS THE ALGEBRAIC DIFFERENCE BETWEEN PAVEMENT SLOPE AND SHOULDER SLOPE SHALL NOT EXCEED 0.08'/'

RD38049 8/7/2024
R040792.DGN

TYPICAL SECTIONS OF IMPROVEMENT

DATE REVISED	DATE FILMED	DATE REVISED	DATE FILMED	FED.RD. DIST.NO.	STATE	FED.AID PROJ.NO.	SHEET NO.	TOTAL SHEETS
				6	ARK.			
				JOB NO.		040792	6	122

(2) TYPICAL SECTIONS OF IMPROVEMENT

STATE OF ARKANSAS
LICENSED PROFESSIONAL ENGINEER
No. 11425
TRINITY D. SMITH

08-15-2024

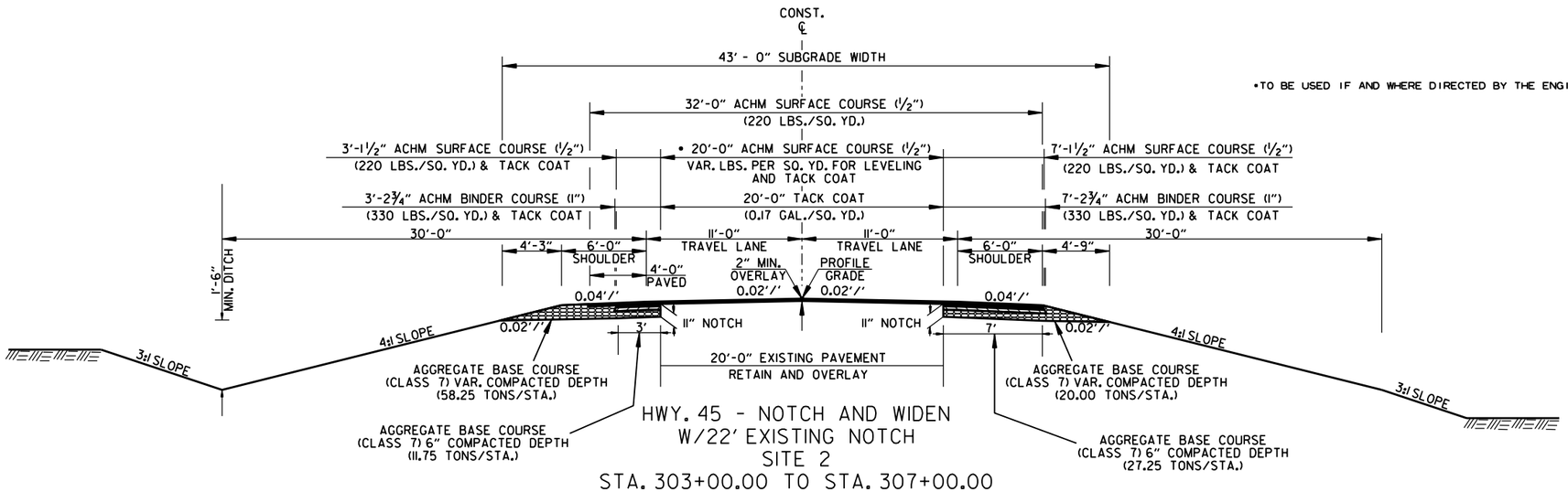

HWY. 45 - NOTCH AND WIDEN
W/22' EXISTING NOTCH
SITE 2
STA. 303+00.00 TO STA. 307+00.00
STA. 313+10.00 TO STA. 316+00.00

•TO BE USED IF AND WHERE DIRECTED BY THE ENGINEER.

NOTES:
THE THICKNESS OF AGGREGATE BASE COURSE SHALL BE WITHIN PLUS OR MINUS ONE INCH OF THE PLAN THICKNESS SHOWN. THE CONTRACTOR WILL CORRECT ANY DEFICIENT THICKNESS THAT DOES NOT MEET TOLERANCE INDICATED. PAYMENT WILL NOT BE MADE FOR MATERIAL PLACED IN EXCESS OF THE TOLERANCE INDICATED.

REFER TO CROSS SECTIONS FOR DEVATION FROM THE NORMAL SLOPES. NO CHANGES SHALL BE MADE FROM THE PLANNED SLOPES WITHOUT THE APPROVAL OF THE ENGINEER.

THE FINAL 2" OF SURFACE COURSE IS TO BE PLACED AFTER ALL OTHER COURSES HAVE BEEN LAID. LONGITUDINAL JOINTS SHALL BE AT LANE LINES.

ASPHALT FOR LEVELING OF EXISTING PAVEMENT SHALL BE PLACED ONLY IF AND WHERE DIRECTED BY THE ENGINEER. CALCULATIONS FOR THE AMOUNT OF LEVELING AND LEVELING OPERATIONS SHALL BE PERFORMED BEFORE CONSTRUCTING NOTCH AND WIDENING. CALCULATIONS WILL NOT BE PAID FOR DIRECTLY, BUT PAYMENT WILL BE CONSIDERED INCLUDED IN THE VARIOUS PAY ITEMS.

WITH THE APPROVAL OF THE ENGINEER, THE CONTRACTOR WILL BE ALLOWED TO SUBSTITUTE, AT NO ADDITIONAL COST TO THE DEPARTMENT, THE FIRST LIFT OF ACHM SURFACE COURSE (1/2") IN LIEU OF AGGREGATE BASE COURSE ON THE SHOULDERS.

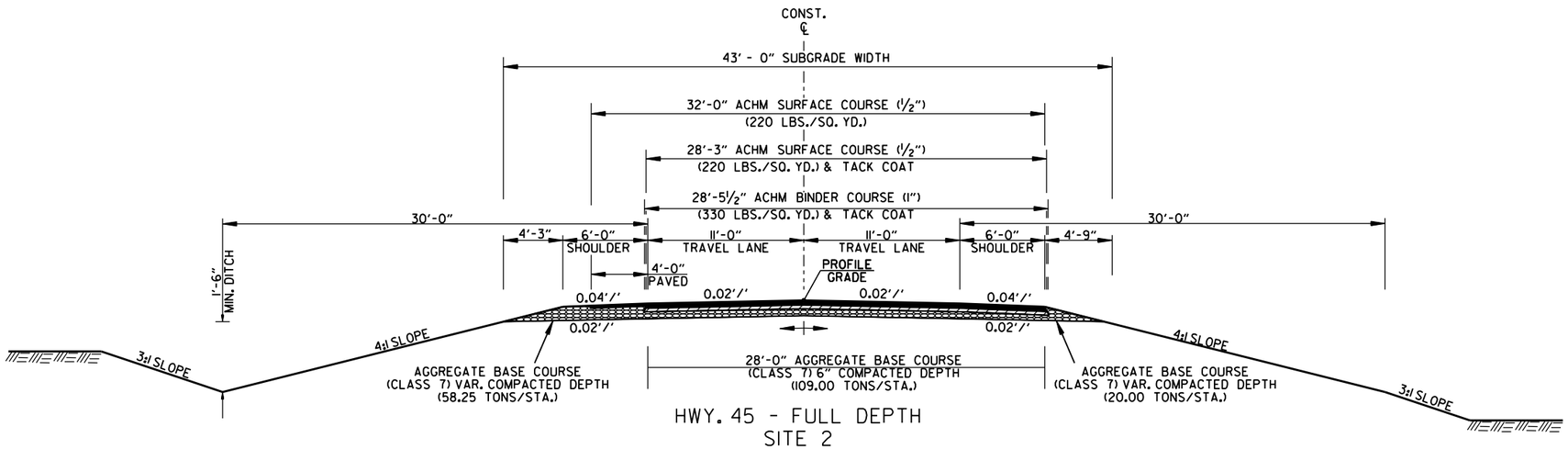

HWY. 45 - FULL DEPTH
SITE 2
STA. 307+00.00 TO STA. 309+67.50
STA. 311+43.50 TO STA. 313+10.00

RD38049 8/7/2024
R040792.DGN

TYPICAL SECTIONS OF IMPROVEMENT

DATE REVISED	DATE FILMED	DATE REVISED	DATE FILMED	FED.RD. DIST.NO.	STATE	FED.AID PROJ.NO.	SHEET NO.	TOTAL SHEETS
				6	ARK.			
				JOB NO.		040792	7	122

(2) TYPICAL SECTIONS OF IMPROVEMENT

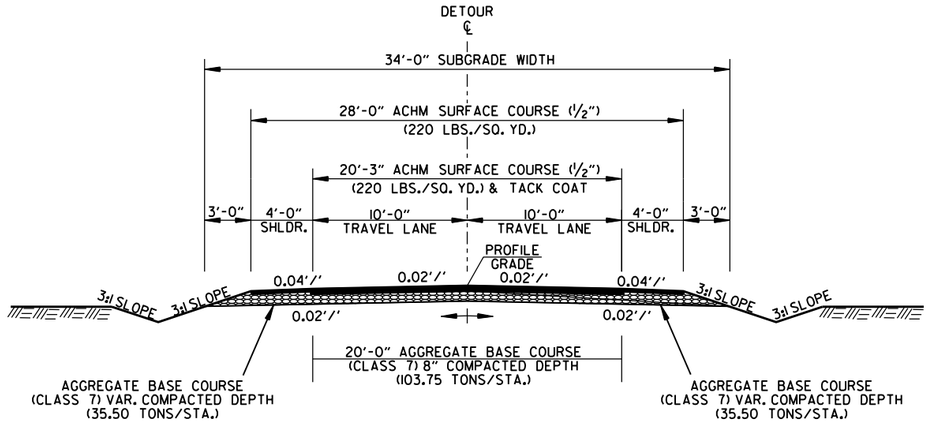

SITE 2 DETOUR - FULL DEPTH
STA. 402+72.00 TO STA. 407+51.00
STA. 408+61.00 TO STA. 412+57.00

NOTES:
THE THICKNESS OF AGGREGATE BASE COURSE SHALL BE WITHIN PLUS OR MINUS ONE INCH OF THE PLAN THICKNESS SHOWN. THE CONTRACTOR WILL CORRECT ANY DEFICIENT THICKNESS THAT DOES NOT MEET TOLERANCE INDICATED. PAYMENT WILL NOT BE MADE FOR MATERIAL PLACED IN EXCESS OF THE TOLERANCE INDICATED.

REFER TO CROSS SECTIONS FOR DEVATION FROM THE NORMAL SLOPES. NO CHANGES SHALL BE MADE FROM THE PLANNED SLOPES WITHOUT THE APPROVAL OF THE ENGINEER.

THE FINAL 2" OF SURFACE COURSE IS TO BE PLACED AFTER ALL OTHER COURSES HAVE BEEN LAID. LONGITUDINAL JOINTS SHALL BE AT LANE LINES.

STATE OF ARKANSAS
LICENSED PROFESSIONAL ENGINEER
No. 11425
TRINITY D. SMITH
Trinity Smith
08-15-2024

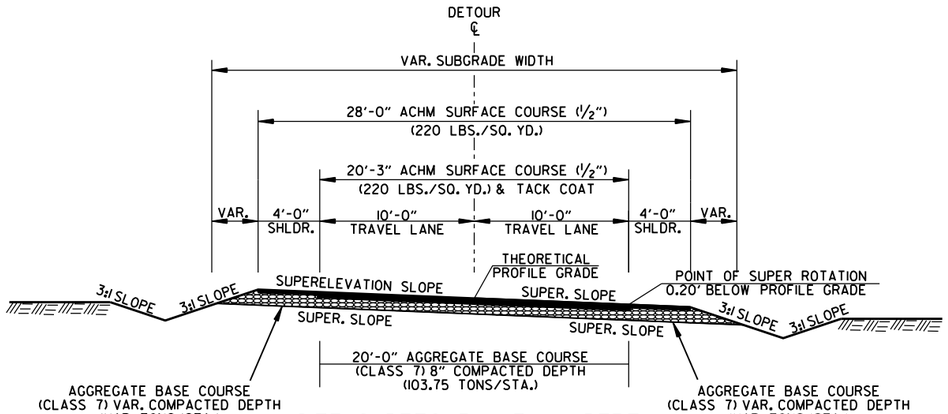

SITE 2 DETOUR - FULL DEPTH
SUPERELEVATION

RD38049 8/7/2024
R040792.DGN

TYPICAL SECTIONS OF IMPROVEMENT

DATE REVISED	DATE FILMED	DATE REVISED	DATE FILMED	FED.RD. DIST.NO.	STATE	FED.AID PROJ.NO.	SHEET NO.	TOTAL SHEETS
				6	ARK.			
				JOB NO.		040792	8	122

(2) TYPICAL SECTIONS OF IMPROVEMENT

STATE OF ARKANSAS
LICENSED PROFESSIONAL ENGINEER
No. 11425
TRINITY D. SMITH
08-15-2024

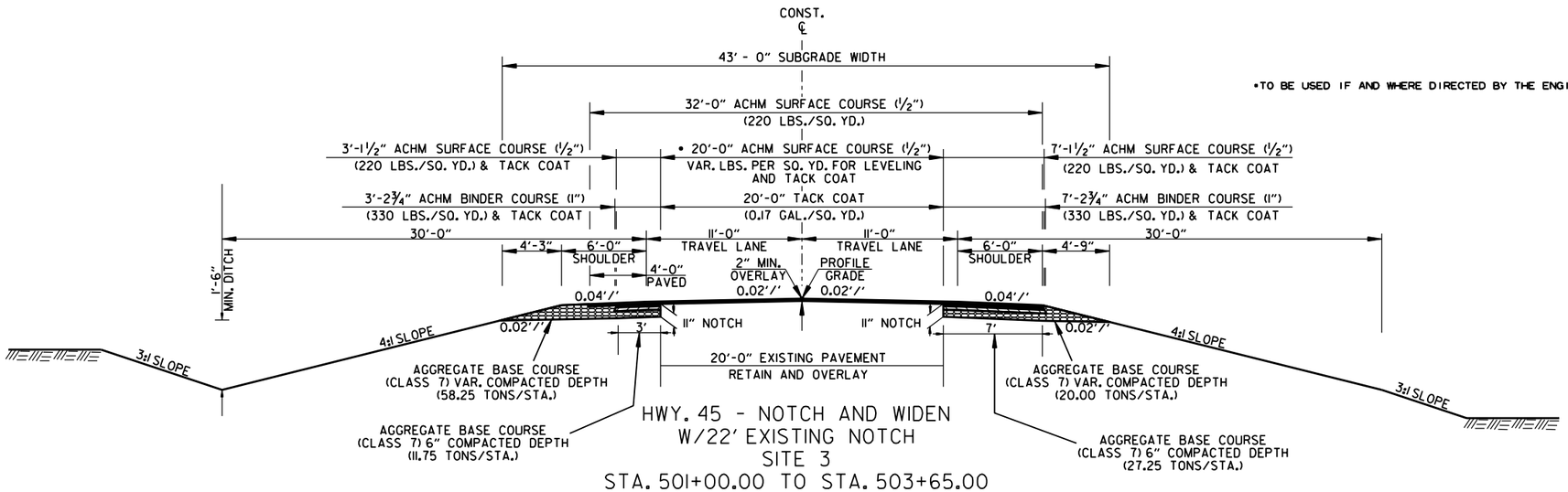

HWY. 45 - NOTCH AND WIDEN
W/22' EXISTING NOTCH
SITE 3
STA. 501+00.00 TO STA. 503+65.00
STA. 510+20.00 TO STA. 513+75.00

•TO BE USED IF AND WHERE DIRECTED BY THE ENGINEER.

NOTES:
THE THICKNESS OF AGGREGATE BASE COURSE SHALL BE WITHIN PLUS OR MINUS ONE INCH OF THE PLAN THICKNESS SHOWN. THE CONTRACTOR WILL CORRECT ANY DEFICIENT THICKNESS THAT DOES NOT MEET TOLERANCE INDICATED. PAYMENT WILL NOT BE MADE FOR MATERIAL PLACED IN EXCESS OF THE TOLERANCE INDICATED.

REFER TO CROSS SECTIONS FOR DEVATION FROM THE NORMAL SLOPES. NO CHANGES SHALL BE MADE FROM THE PLANNED SLOPES WITHOUT THE APPROVAL OF THE ENGINEER.

THE FINAL 2" OF SURFACE COURSE IS TO BE PLACED AFTER ALL OTHER COURSES HAVE BEEN LAID. LONGITUDINAL JOINTS SHALL BE AT LANE LINES.

ASPHALT FOR LEVELING OF EXISTING PAVEMENT SHALL BE PLACED ONLY IF AND WHERE DIRECTED BY THE ENGINEER. CALCULATIONS FOR THE AMOUNT OF LEVELING AND LEVELING OPERATIONS SHALL BE PERFORMED BEFORE CONSTRUCTING NOTCH AND WIDENING. CALCULATIONS WILL NOT BE PAID FOR DIRECTLY, BUT PAYMENT WILL BE CONSIDERED INCLUDED IN THE VARIOUS PAY ITEMS.

WITH THE APPROVAL OF THE ENGINEER, THE CONTRACTOR WILL BE ALLOWED TO SUBSTITUTE, AT NO ADDITIONAL COST TO THE DEPARTMENT, THE FIRST LIFT OF ACHM SURFACE COURSE (1/2") IN LIEU OF AGGREGATE BASE COURSE ON THE SHOULDERS.

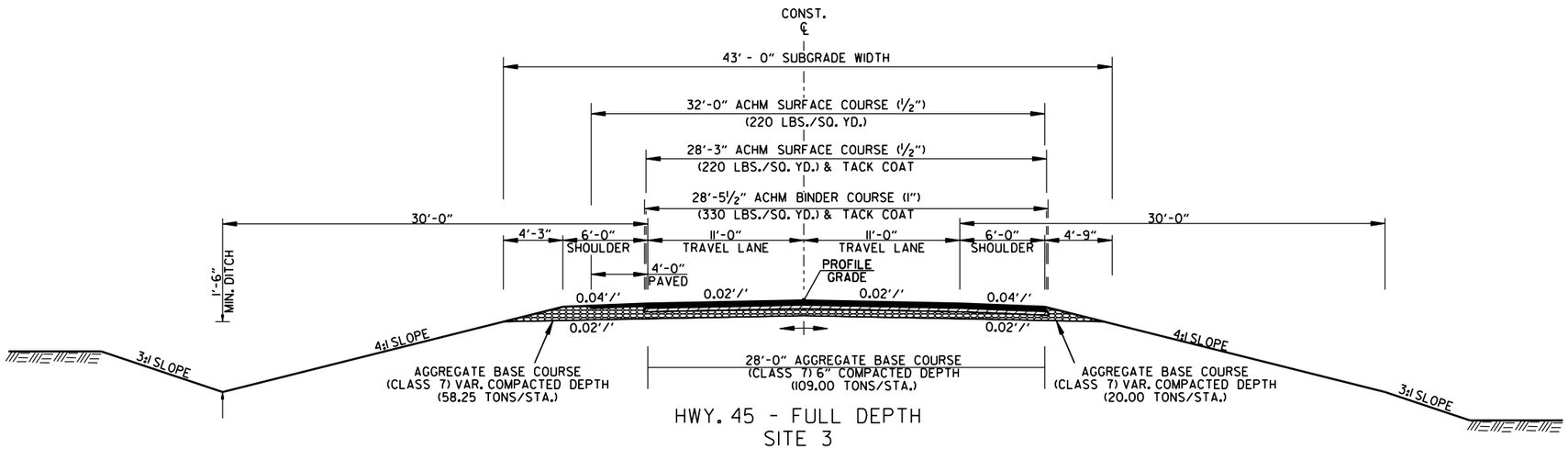

HWY. 45 - FULL DEPTH
SITE 3
STA. 503+65.00 TO STA. 510+20.00

RD38049 8/7/2024
R040792.DGN

TYPICAL SECTIONS OF IMPROVEMENT

DATE REVISED	DATE FILMED	DATE REVISED	DATE FILMED	FED.RD. DIST.NO.	STATE	FED.AID PROJ.NO.	SHEET NO.	TOTAL SHEETS
				6	ARK.			
				JOB NO.		040792	9	122

(2) TYPICAL SECTIONS OF IMPROVEMENT

STATE OF ARKANSAS
LICENSED PROFESSIONAL ENGINEER
No. 11425
TRINITY D. SMITH
08-15-2024

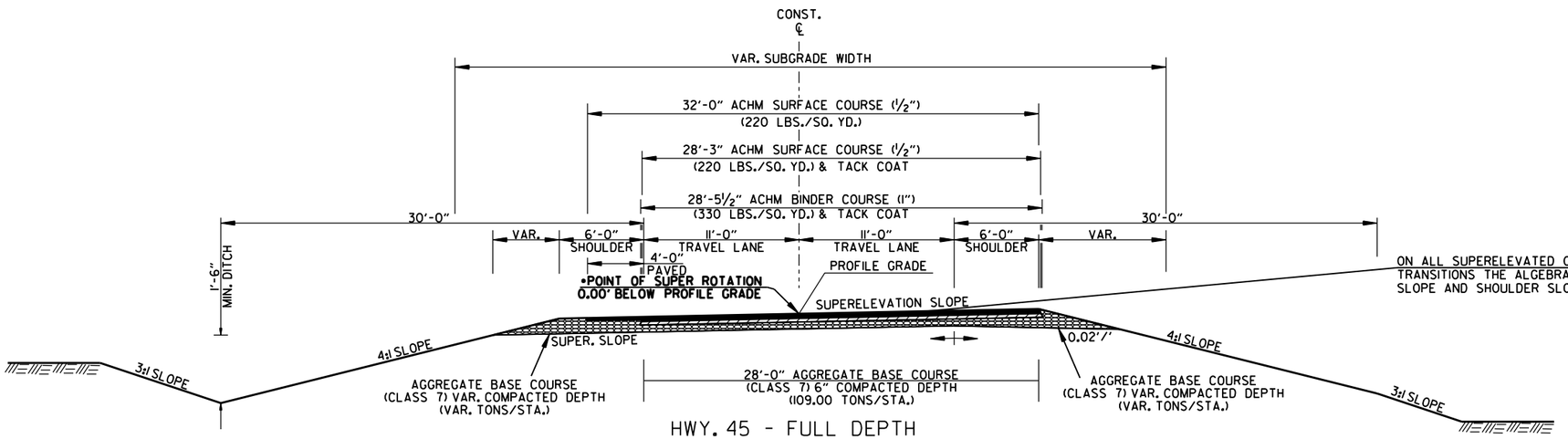

HWY. 45 - FULL DEPTH
SITE 3
SUPERELEVATION

NOTES:
THE THICKNESS OF AGGREGATE BASE COURSE SHALL BE WITHIN PLUS OR MINUS ONE INCH OF THE PLAN THICKNESS SHOWN. THE CONTRACTOR WILL CORRECT ANY DEFICIENT THICKNESS THAT DOES NOT MEET TOLERANCE INDICATED. PAYMENT WILL NOT BE MADE FOR MATERIAL PLACED IN EXCESS OF THE TOLERANCE INDICATED.

REFER TO CROSS SECTIONS FOR DEVATION FROM THE NORMAL SLOPES. NO CHANGES SHALL BE MADE FROM THE PLANNED SLOPES WITHOUT THE APPROVAL OF THE ENGINEER.

THE FINAL 2" OF SURFACE COURSE IS TO BE PLACED AFTER ALL OTHER COURSES HAVE BEEN LAID. LONGITUDINAL JOINTS SHALL BE AT LANE LINES.

ASPHALT FOR LEVELING OF EXISTING PAVEMENT SHALL BE PLACED ONLY IF AND WHERE DIRECTED BY THE ENGINEER. CALCULATIONS FOR THE AMOUNT OF LEVELING AND LEVELING OPERATIONS SHALL BE PERFORMED BEFORE CONSTRUCTING NOTCH AND WIDENING. CALCULATIONS WILL NOT BE PAID FOR DIRECTLY, BUT PAYMENT WILL BE CONSIDERED INCLUDED IN THE VARIOUS PAY ITEMS.

WITH THE APPROVAL OF THE ENGINEER, THE CONTRACTOR WILL BE ALLOWED TO SUBSTITUTE, AT NO ADDITIONAL COST TO THE DEPARTMENT, THE FIRST LIFT OF ACHM SURFACE COURSE (1/2") IN LIEU OF AGGREGATE BASE COURSE ON THE SHOULDERS.

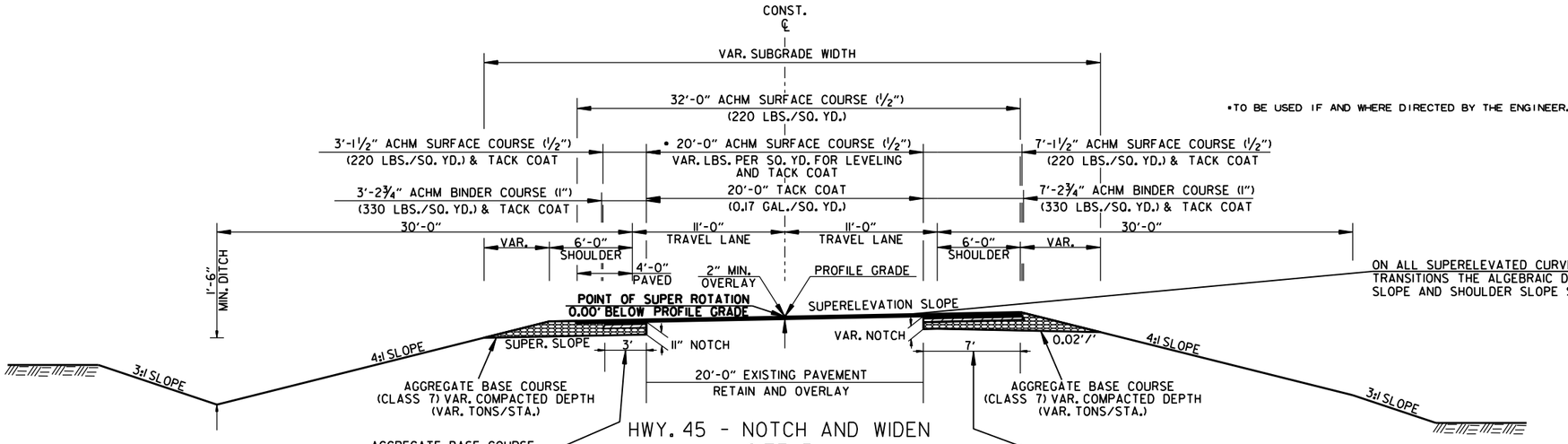

•TO BE USED IF AND WHERE DIRECTED BY THE ENGINEER.

HWY. 45 - NOTCH AND WIDEN
SITE 3
SUPERELEVATION
W/22' NOTCH

RD38049 8/7/2024
R040792.DGN

TYPICAL SECTIONS OF IMPROVEMENT

DATE REVISED	DATE FILMED	DATE REVISED	DATE FILMED	FED.RD. DIST.NO.	STATE	FED.AID PROJ.NO.	SHEET NO.	TOTAL SHEETS
				6	ARK.			
				JOB NO.		040792	10	122

(2) TYPICAL SECTIONS OF IMPROVEMENT

STATE OF ARKANSAS
LICENSED PROFESSIONAL ENGINEER
No. 11425
TRINITY D. SMITH

08-15-2024

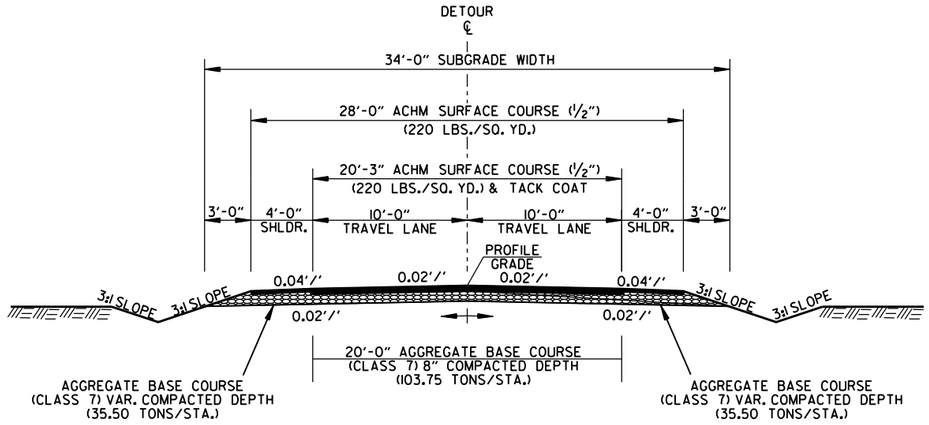

SITE 3 DETOUR - FULL DEPTH
STA. 703+93.44 TO STA. 709+88.35

NOTES:
THE THICKNESS OF AGGREGATE BASE COURSE SHALL BE WITHIN PLUS OR MINUS ONE INCH OF THE PLAN THICKNESS SHOWN. THE CONTRACTOR WILL CORRECT ANY DEFICIENT THICKNESS THAT DOES NOT MEET TOLERANCE INDICATED. PAYMENT WILL NOT BE MADE FOR MATERIAL PLACED IN EXCESS OF THE TOLERANCE INDICATED.

REFER TO CROSS SECTIONS FOR DEVATION FROM THE NORMAL SLOPES. NO CHANGES SHALL BE MADE FROM THE PLANNED SLOPES WITHOUT THE APPROVAL OF THE ENGINEER.

THE FINAL 2" OF SURFACE COURSE IS TO BE PLACED AFTER ALL OTHER COURSES HAVE BEEN LAID. LONGITUDINAL JOINTS SHALL BE AT LANE LINES.

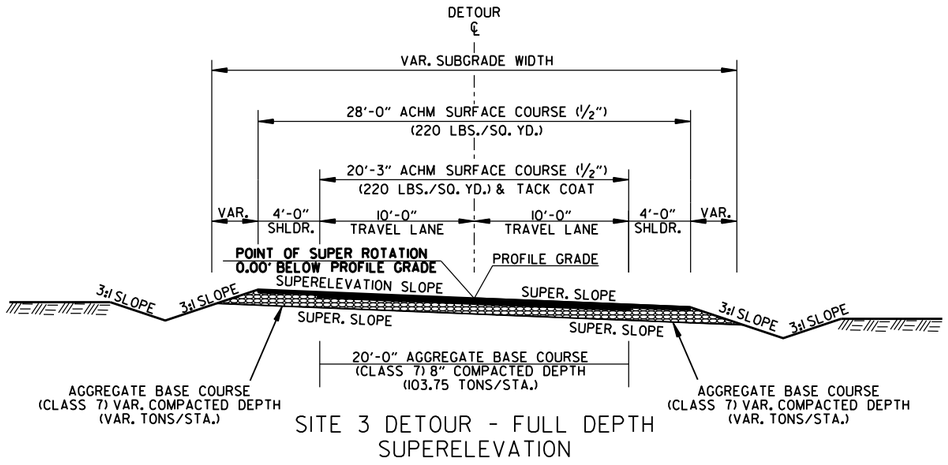

SITE 3 DETOUR - FULL DEPTH
SUPERELEVATION

RD38049 8/7/2024
R040792.DGN

TYPICAL SECTIONS OF IMPROVEMENT

DATE REVISED	DATE FILMED	DATE REVISED	DATE FILMED	FED.RD. DIST.NO.	STATE	FED.AID PROJ.NO.	SHEET NO.	TOTAL SHEETS
				6	ARK.			
				JOB NO.		040792	11	122

(2) SPECIAL DETAILS



6.0" Radius, 1.3" Border, Black on Orange;
"Job XXXXXX" C 2K; "Start Date Mo Year" C 2K;
"Est Completion Mo Year" C 2K; "IDRIVE " Arial;
" ARKANSAS.COM " Arial;

CONSTRUCTION PROJECT INFORMATION SIGN

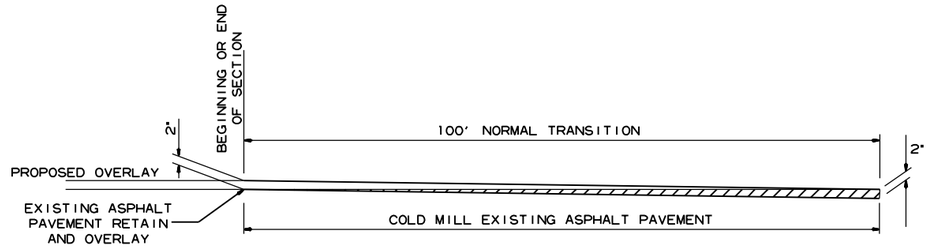

DETAIL FOR TRANSITIONS

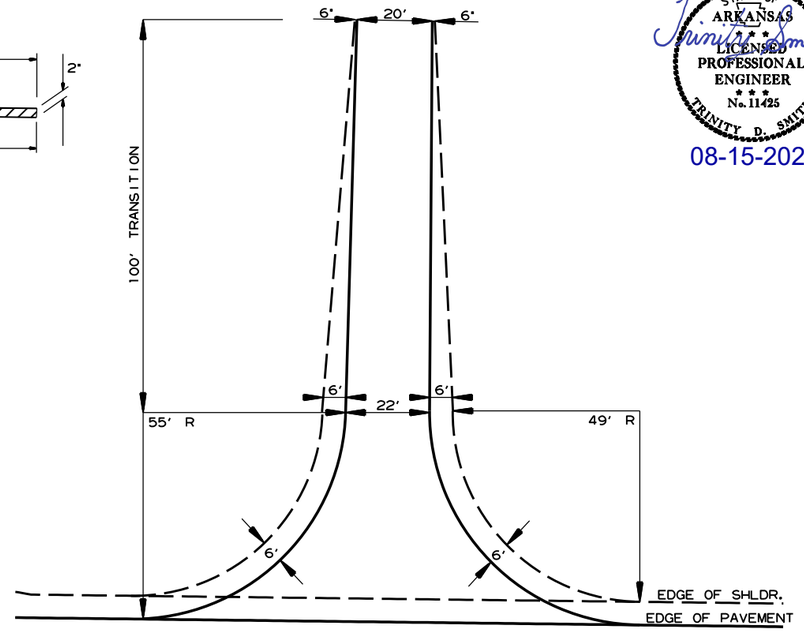

DETAIL FOR HWY. 252 TURNOUT
SITE 2 - STA. 314+96

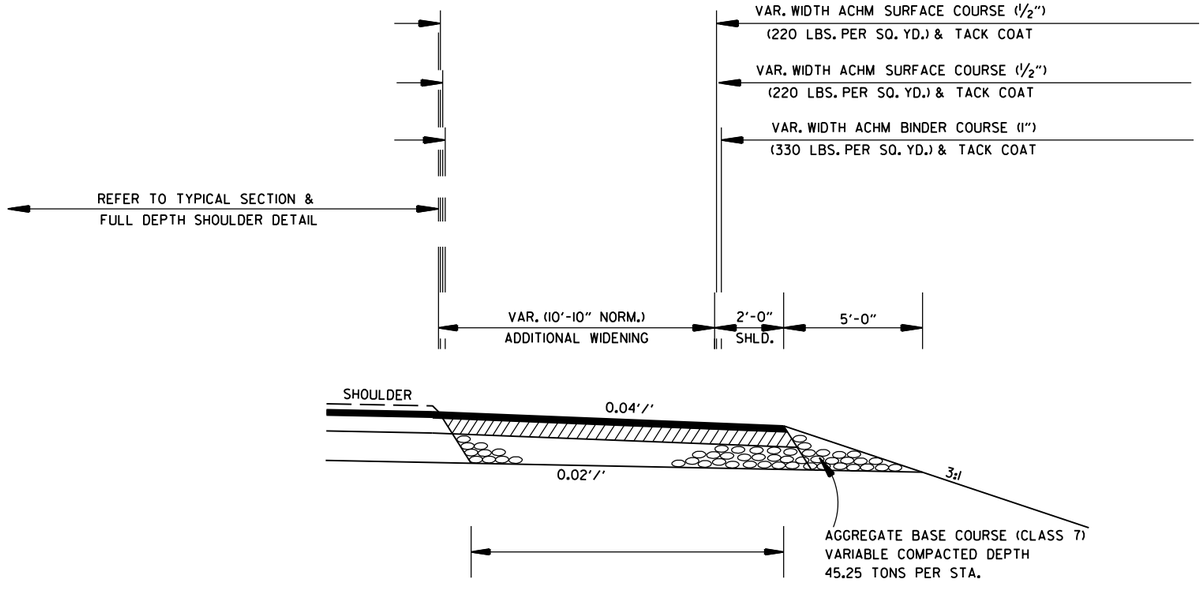

ADDITIONAL WIDENING
FOR MAINTENANCE OF TRAFFIC
SITE 1 STATIONS: 111+36.50 - 120+00.00

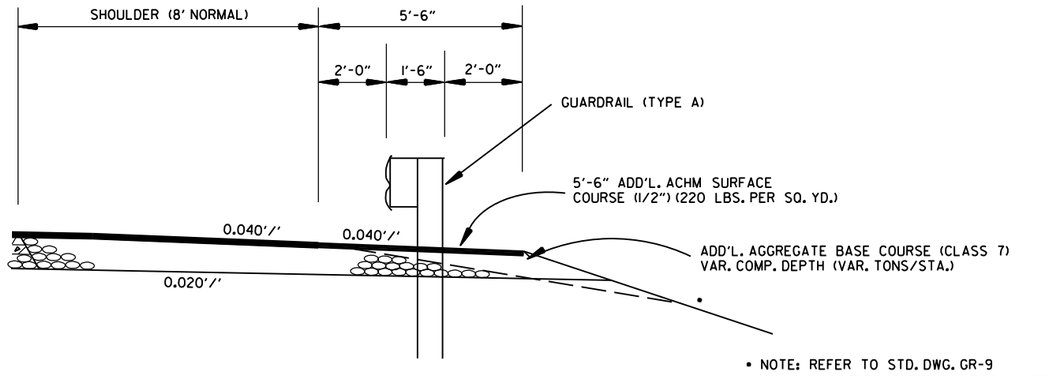

WIDENING FOR GUARDRAIL

• NOTE: REFER TO STD. DWG. GR-9 AND CROSS SECTIONS FOR SLOPE REQUIREMENTS BEHIND GUARDRAIL.

STATE OF ARKANSAS
LICENSED PROFESSIONAL ENGINEER
No. 11425
TRINITY D. SMITH
08-15-2024

RD38049 8/6/2024
R040792.DGN

SPECIAL DETAILS

DATE REVISED	DATE FILMED	DATE REVISED	DATE FILMED	FED.RD. DIST.NO.	STATE	FED.AID PROJ.NO.	SHEET NO.	TOTAL SHEETS
				6	ARK.			
				JOB NO.		040792	12	122

(2) SPECIAL DETAILS

STATE OF ARKANSAS
LICENSED PROFESSIONAL ENGINEER
No. 11425
TRINITY D. SMITH

Trinity Smith
08-15-2024

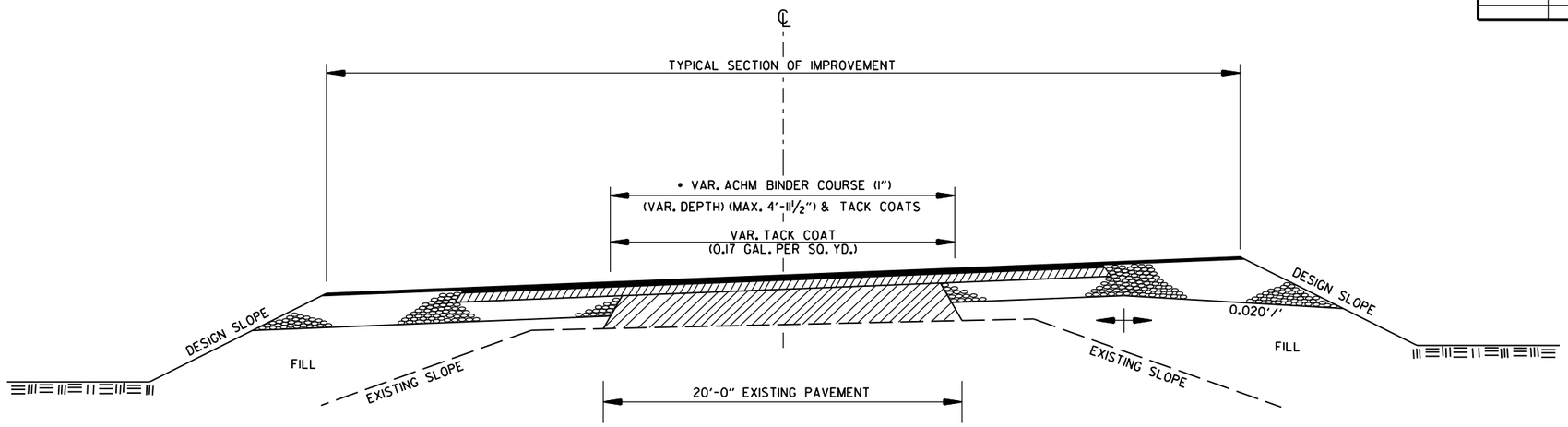

METHOD OF RAISING GRADE

NOTES:

(1) THIS DETAIL TO BE USED ONLY WHERE DIRECTED BY THE ENGINEER.

(2) QUANTITIES FOR METHOD OF GRADE RAISE USING ASPHALT WERE CALCULATED ON THIS PROJECT AT LOCATIONS WHERE THE DISTANCE BETWEEN THE EXISTING ASPHALT ROADWAY AND THE PROPOSED SUBGRADE WAS ONE FOOT OR LESS.

(3) IN LOCATIONS WHERE THE DISTANCE BETWEEN THE PROPOSED SUBGRADE AND THE EXISTING ASPHALT ROADWAY IS MORE THAN ONE FOOT, SCARIFICATION OF THE EXISTING ASPHALT ROADWAY WILL BE REQUIRED AS STATED IN SECTION 210, SUBSECTION 210.09, OF THE STANDARD SPECIFICATIONS.

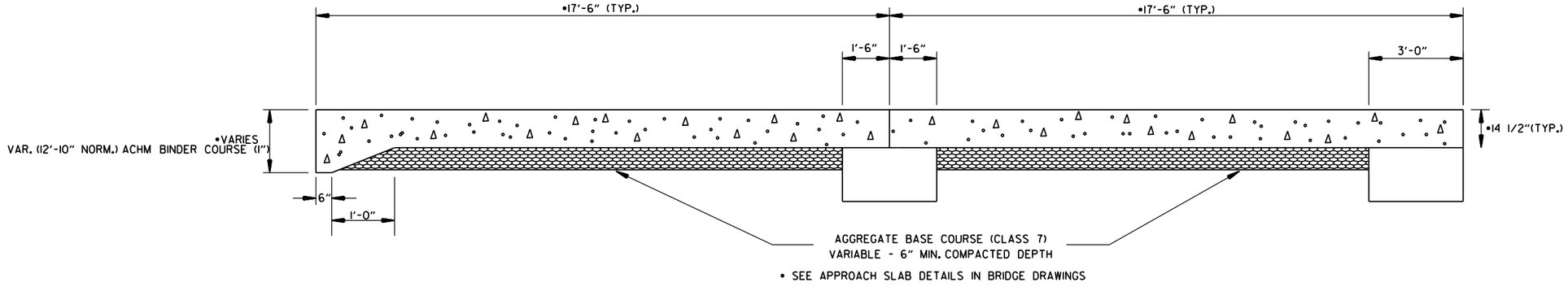

SECTION OF APPROACH SLAB (FOR ASPHALT PAVEMENT)

RD38049 8/6/2024
R040792.DGN

DATE REVISED	DATE FILMED	DATE REVISED	DATE FILMED	FED.RD. DIST.NO.	STATE	FED.AID PROJ.NO.	SHEET NO.	TOTAL SHEETS
				6	ARK.			
				JOB NO.		040792	13	122

(2) SPECIAL DETAILS

STATE OF ARKANSAS
LICENSED PROFESSIONAL ENGINEER
No. 11425
TRINITY D. SMITH

08-15-2024

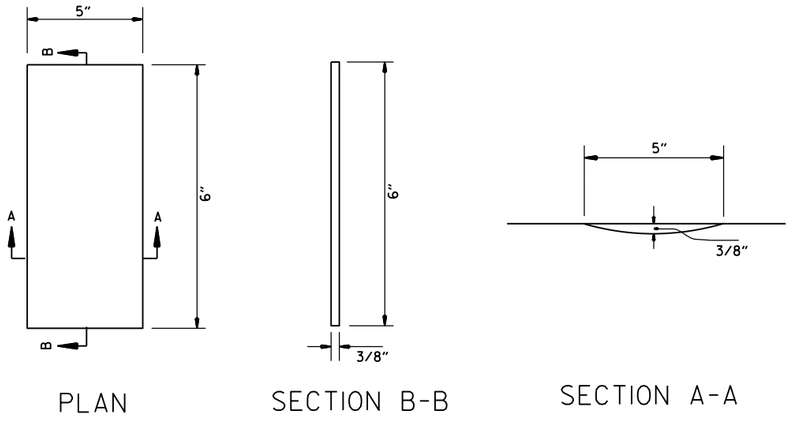

DETAILS OF RUMBLE STRIPE

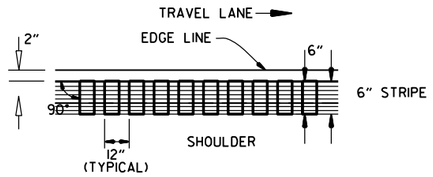

LOCATION PLAN OF RUMBLE STRIPE
LEFT OR RIGHT SHOULDER

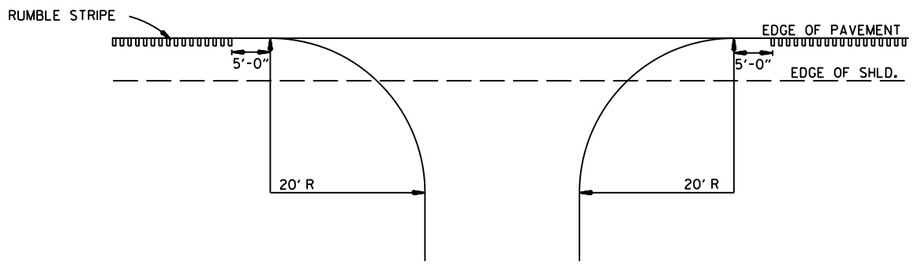

DETAIL FOR RUMBLE STRIPE GAP
AT DRIVEWAY TURNOUTS

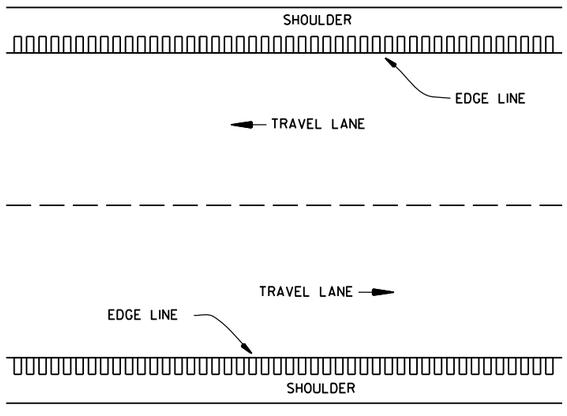

PLAN VIEW

GENERAL NOTES:

1. RUMBLE STRIPES SHALL NOT BE INSTALLED ON BRIDGE DECKS, APPROACH SLABS, INTERSECTING STREETS OR ROADWAYS, RESIDENTIAL OR COMMERCIAL DRIVEWAYS OR ACROSS TRANSVERSE JOINTS OF CONCRETE SHOULDERS.
2. RUMBLE STRIPES SHALL NOT BE INSTALLED ON A PAVED SHOULDER THAT IS USED AS A DECELERATION LANE FOR THE LENGTH DEEMED APPROPRIATE BY THE ENGINEER.
3. RUMBLE STRIPES SHALL BE MEASURED BY THE LINEAR FOOT LONGITUDINALLY ALONG THE SHOULDER. PAYMENT SHALL ONLY INCLUDE THAT PORTION OF THE SHOULDER ON WHICH RUMBLE STRIPES HAVE BEEN CONSTRUCTED. NO MEASUREMENT OR PAYMENT WILL BE MADE FOR GAPS, DRIVEWAYS, TURNOUTS, OR OTHER PUBLIC ROAD INTERSECTIONS WHERE RUMBLE STRIPES HAVE NOT BEEN CONSTRUCTED.
4. THE 3/8" DEPTH SHALL GENERALLY APPLY FOR THE ENTIRE 6" LENGTH. SOME VARIATION TO SUIT SHOULDER SLOPE BREAKS MAY BE NECESSARY.

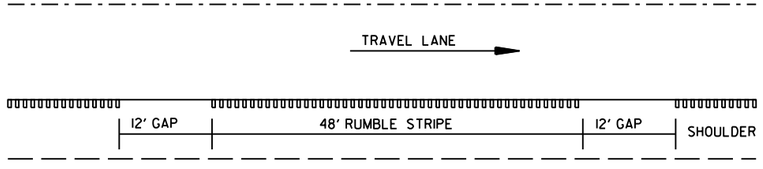

NOTE: GAP PATTERN SHALL BE ADJUSTED BY THE ENGINEER IN THE FIELD ALLOWING FOR DRIVEWAYS TO SERVE AS THE GAP.

DETAIL FOR GAP PATTERN RUMBLE STRIPE

RD38049 8/6/2024
R040792.DGN

SPECIAL DETAILS

DATE REVISED	DATE REVISED	FED.RD. DIST.NO.	STATE	JOB NO.	SHEET NO.	TOTAL SHEETS
		6	ARK.	040792	14	122
		SPECIAL DETAILS				

STATE OF ARKANSAS
LICENSED PROFESSIONAL ENGINEER
No. 11425
TRINITY D. SMITH
08-15-2024

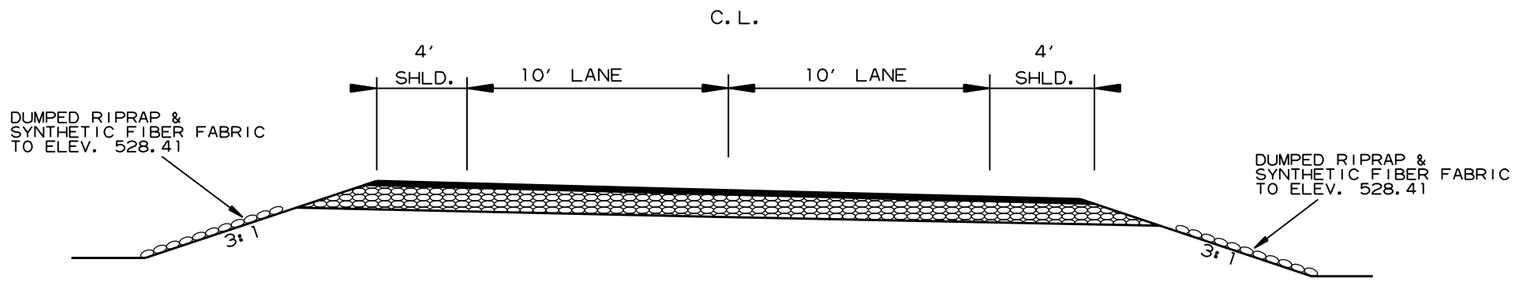

THIS STREAM IS CLASSIFIED AS A PERENNIAL STREAM. THE STREAM BANK ELEVATION IS 522.00 FT. MSL.

TYPICAL SECTIONS OF IMPROVEMENT - HWY. 45 SITE 2 DETOUR
STA. 408+50.84

REFER TO SURVEY CONTROL DETAIL SHEETS FOR HORIZONTAL AND VERTICAL CONTROL DATA.

SPECIAL DETAILS

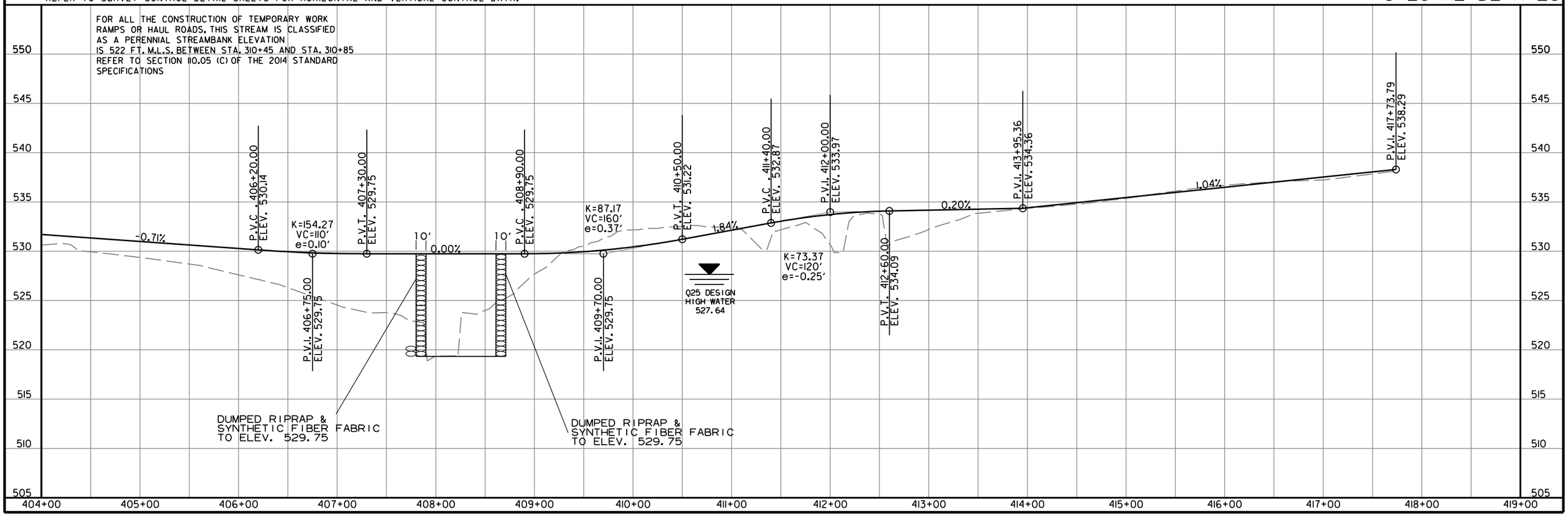

RD038049 R040792.DGN 8/6/2024

DATE REVISED	DATE REVISED	FED.RD. DIST.NO.	STATE	JOB NO.	SHEET NO.	TOTAL SHEETS
		6	ARK.	040792	15	122
		SPECIAL DETAILS				

STATE OF ARKANSAS
LICENSED PROFESSIONAL ENGINEER
No. 11425
TRINITY D. SMITH

08-15-2024

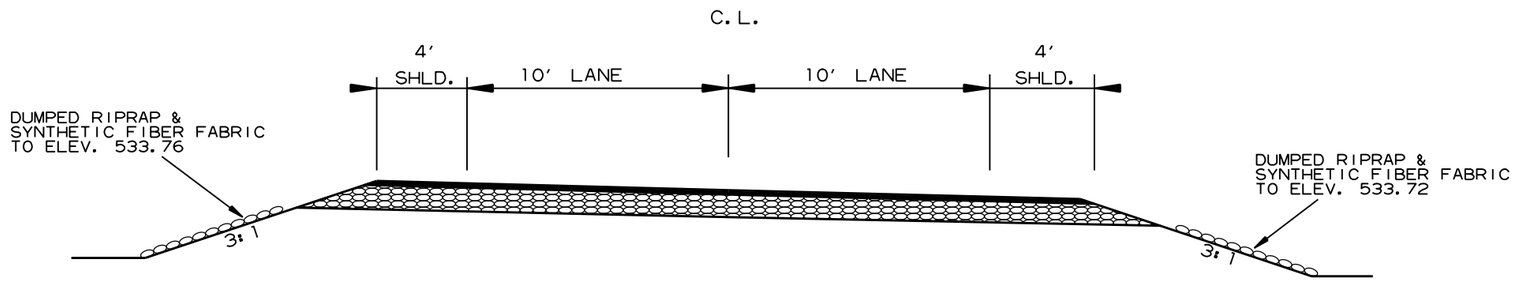

THIS STREAM IS CLASSIFIED AS A INTERMITTENT STREAM. THE STREAM BANK ELEVATION IS 526.00 FT. MSL.

TYPICAL SECTIONS OF IMPROVEMENT - HWY. 45 SITE 3 DETOUR
STA. 707+48.97

REFER TO SURVEY CONTROL DETAIL SHEETS FOR HORIZONTAL AND VERTICAL CONTROL DATA.

FOR ALL THE CONSTRUCTION OF TEMPORARY WORK RAMPS OR HAUL ROADS, THIS STREAM IS CLASSIFIED AS AN INTERMITTENT STREAMBANK ELEVATION IS 526 FT. M.L.S. BETWEEN STA. 507+25 AND STA. 507+80 REFER TO SECTION 110.05 (C) OF THE 2014 STANDARD SPECIFICATIONS

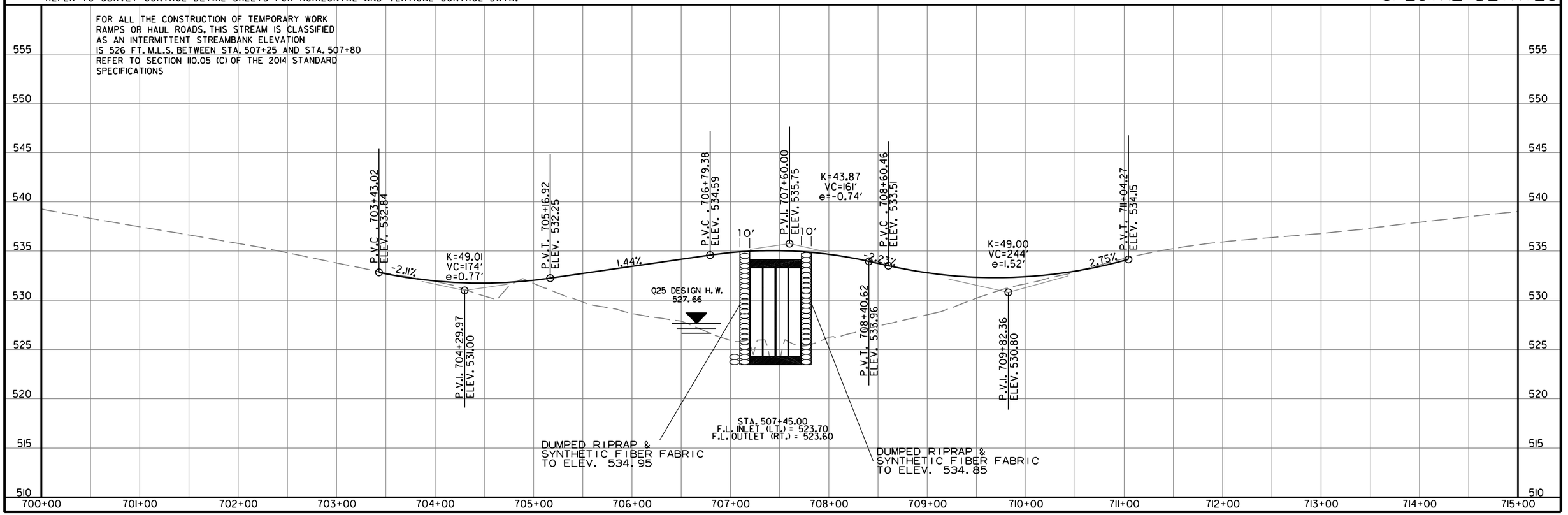

RD38049 R040792.DGN 8/6/2024

DATE REVISED	DATE FILMED	DATE REVISED	DATE FILMED	FED. ROAD DIST. NO.	STATE	FED. AID PROJ. NO.	SHEET NO.	TOTAL SHEETS
				6	ARK.			
				JOB NO.		040792	16	122

(1) SPECIAL DETAILS

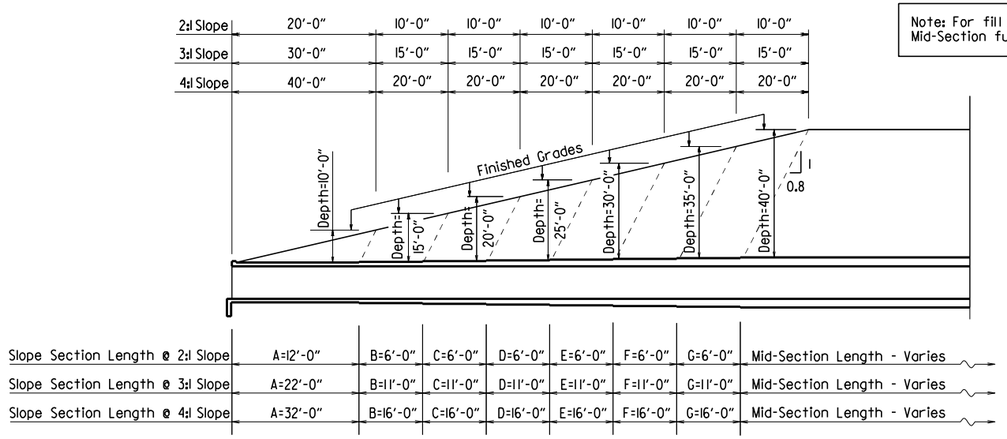

Note: For fill depths 10' and under, use Mid-Section full length of box culvert.

LONGITUDINAL SECTION LENGTH SCHEDULE FOR VARYING FILL DEPTHS OVER 10'

Lengths for Non-Skewed Boxes

*LL = Skewed End Section Length - See "Skewed End Section Details" Length LL varies with skew angle, overall box width and fill depth and may eliminate the need for some slope section lengths as shown.

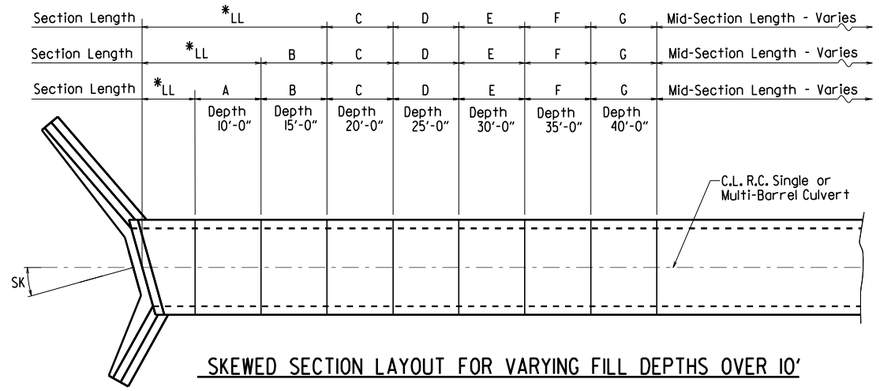

SKEWED SECTION LAYOUT FOR VARYING FILL DEPTHS OVER 10'

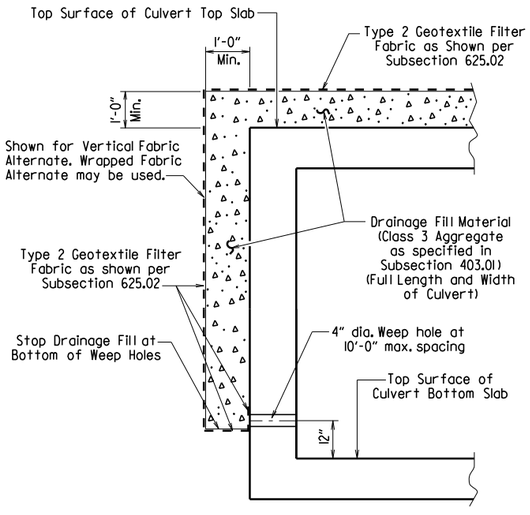

CULVERT DRAINAGE DETAIL FOR ROCK FILL

This detail shall be used when rock fill is specified for embankment construction.

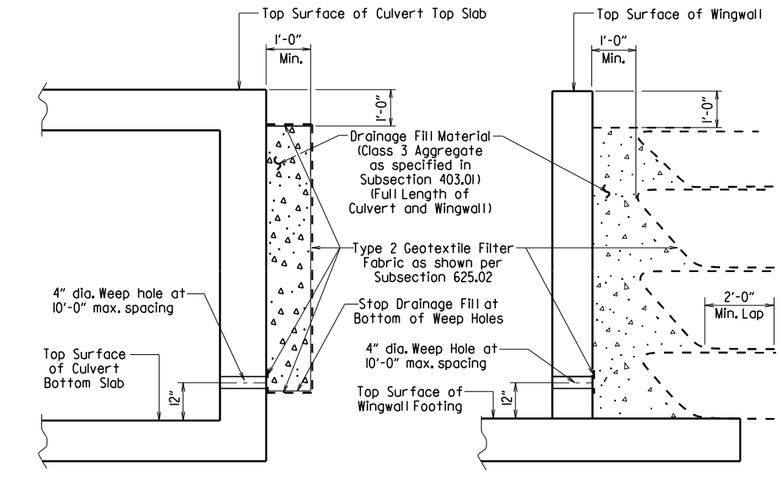

For Details of Excavation and Pay Limits, see Standard Drawing RCB-2.

VERTICAL FABRIC ALTERNATE
(Shown for Culvert, Similar for Wingwall)

WRAPPED FABRIC ALTERNATE
(Shown for Wingwall, Similar for Culvert)

WINGWALL & CULVERT DRAINAGE DETAIL

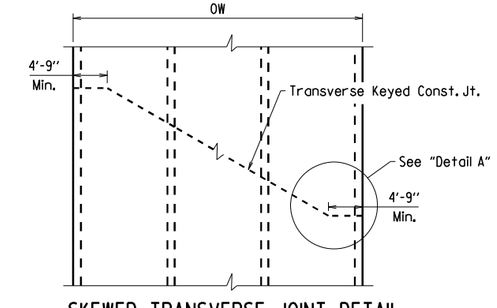

SKEWED TRANSVERSE JOINT DETAIL

This detail shall be used to construct a skewed transverse joint only for Multi-Barrel Culverts and only when required by the Maintenance of Traffic Plans. Otherwise, transverse joints should be made normal to the centerline of the barrel.

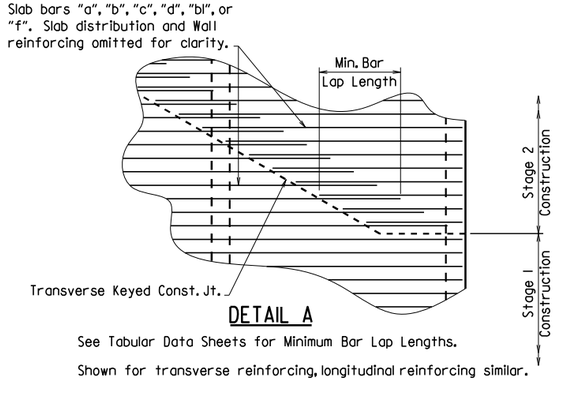

DETAIL A

See Tabular Data Sheets for Minimum Bar Lap Lengths.

Shown for transverse reinforcing, longitudinal reinforcing similar.

GENERAL NOTES:

CONSTRUCTION SPECIFICATIONS: Arkansas State Highway and Transportation Department Standard Specifications for Highway Construction (2014 edition) with applicable Supplemental Specifications and Special Provisions. Section and Subsection refer to the Standard Construction Specifications unless otherwise noted in the Plans.

DESIGN SPECIFICATIONS: AASHTO LRFD Bridge Design Specifications, Fifth Edition (2010) with 2010 interim revisions.

LIVE LOADING: HL-93

All concrete shall be Class S with a minimum 28-day compressive strength of 3,500 psi and shall be poured in the dry. All exposed corners to have ¾" chamfers.

Reinforcing Steel shall be Grade 60 (yield strength = 60,000 psi) conforming to AASHTO M31 or M322, Type A, with mill test reports.

Reinforcing Steel Tolerances: The tolerances for reinforcing steel shall meet those listed in 'Manual of Standard Practice' published by Concrete Reinforcing Steel Institute (CRSI) except that the tolerance for truss bars such as Figure 3 on page 7-4 of the CRSI Manual shall be minus zero to plus 1/2 inch.

Excavation and backfilling shall be in accordance with the requirements of Section 801.

Membrane Waterproofing shall conform to the requirements of Section 815. Membrane Waterproofing shall be Type C and as directed by the Engineer applied to all construction joints in the top slab and the sidewalls of R.C. Box culverts and to the construction joint between wingwalls and R.C. Box culvert walls.

Weep Holes in box culvert walls shall have a maximum horizontal spacing of 10'-0" and shall be spaced to clear all reinforcing steel. The drain opening shall be 4" diameter and shall be placed 12" above the top of the bottom slab.

Weep Holes in wingwalls shall have a maximum horizontal spacing of 10'-0" and shall be spaced to clear all reinforcing steel. There shall be a minimum of two (2) weep holes in each wingwall. The drain opening shall be 4" diameter and shall be placed 12" above the top of the wingwall footing.

The barrel components of the culvert may be constructed using continuous pours. For longer culvert construction, the Contractor may use multiple pours with transverse construction joints spaced a minimum of 50 feet apart unless superseded by stage construction or site constraints as approved by the Engineer. Construction joints between footings and walls shall be made only where shown in the Plans. Joints shall be keyed and shall be normal to the centerline of barrel except as noted. Reinforcing shall be continuous through joints unless noted otherwise. Reinforcing through stage construction joints shall provide the minimum bar lap length shown on the Tabular Data Sheets. All longitudinal construction joints shall be submitted to the Engineer for approval.

Membrane Waterproofing, Weep Holes, Geotextile Filter Fabric, and Drainage Fill Material will not be paid for directly but shall be considered subsidiary to Class S Concrete.

When the top slab of the box culvert serves as finished roadway surface, curing and finishing shall be in accordance with subsections 802.17 and 802.20 for bridge roadway surface and a tine finish shall be applied in accordance with subsection 802.19 for Class 5 Tined Bridge Roadway Surface Finish. Curing and finishing shall not be paid for directly, but shall be considered incidental to the item "Class S Concrete-Roadway". Class 1 Protective Surface Treatment shall be applied to the roadway surface and this work shall be paid for under the unit price bid for "Class 1 Protective Surface Treatment".

When precast reinforced concrete box culverts are substituted for cast in place box culverts, they shall be manufactured according to ASTM C 1577 and meet the requirements of Section 607. When the top slab of the box culvert serves as the finished roadway surface, a precast reinforced concrete box culvert substitution is not allowed.

STATE OF ARKANSAS
Sep 15 2023 12:20 AM
LICENSED PROFESSIONAL ENGINEER
No. 9235
CHARLES R. ELLIS

SHEET 1 OF 4
GENERAL DETAILS OF R.C. BOX CULVERT
GENERAL NOTES & LONGITUDINAL SECTION LENGTH SCHEDULE
SPECIAL DETAILS

LRFD

V 11.17 b040792_culvert.dgn

DATE REVISED	DATE FILMED	DATE REVISED	DATE FILMED	FED. ROAD DIST. NO.	STATE	FED. AID PROJ. NO.	SHEET NO.	TOTAL SHEETS
				6	ARK.			
				JOB NO.		040792	17	122
				(1)		SPECIAL DETAILS		

Note: When top slab of culvert serves as finished roadway surface, see General Notes on Sheet 1 of 4.

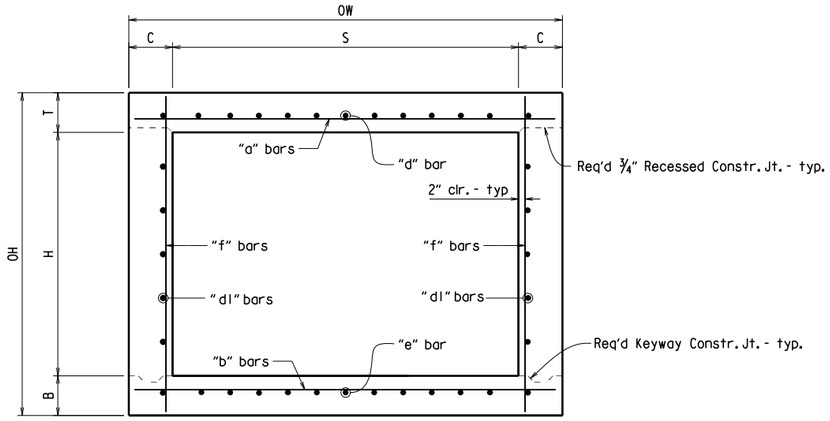

TYPICAL SECTION M-M

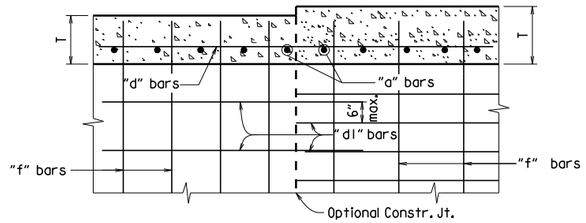

Longitudinal Bar Spacing at individual sections shall be maintained, which may result in noncontact bar laps.

LONGITUDINAL LAP DETAIL AT CHANGE IN SECTIONS

TOP SLAB SHOWN, BOTTOM SLAB SIMILAR

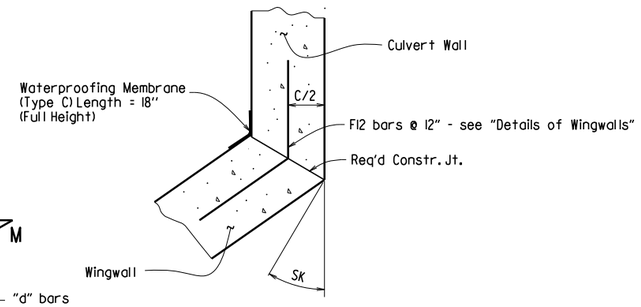

WINGWALL ATTACHMENT

See "Details of Wingwalls" for additional information and wingwall details.

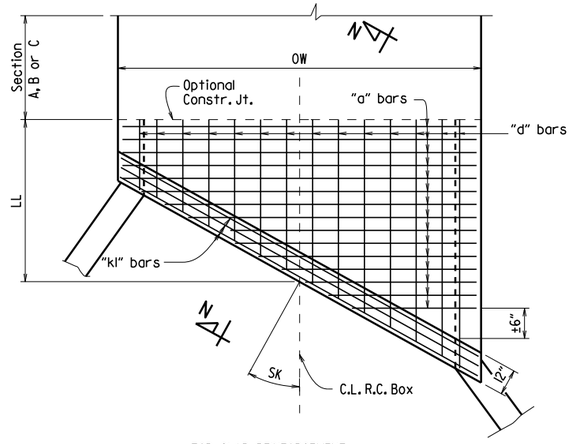

TOP SLAB REINFORCEMENT

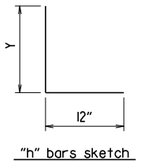

"h" bars sketch

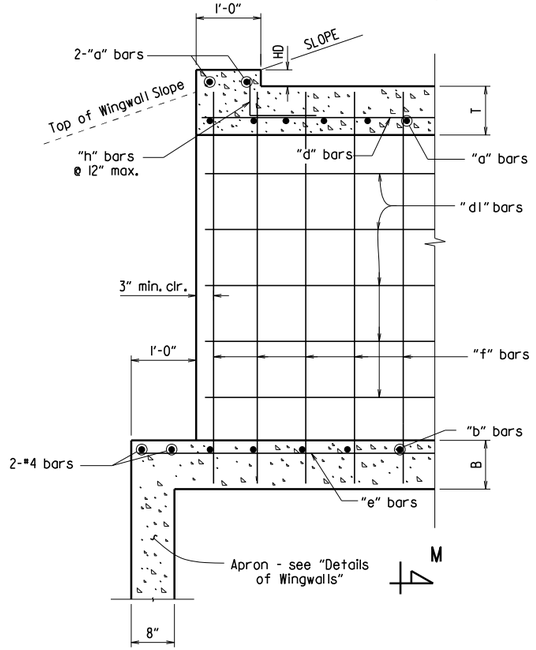

PART LONGITUDINAL SECTION

(Non-Skewed Ends)

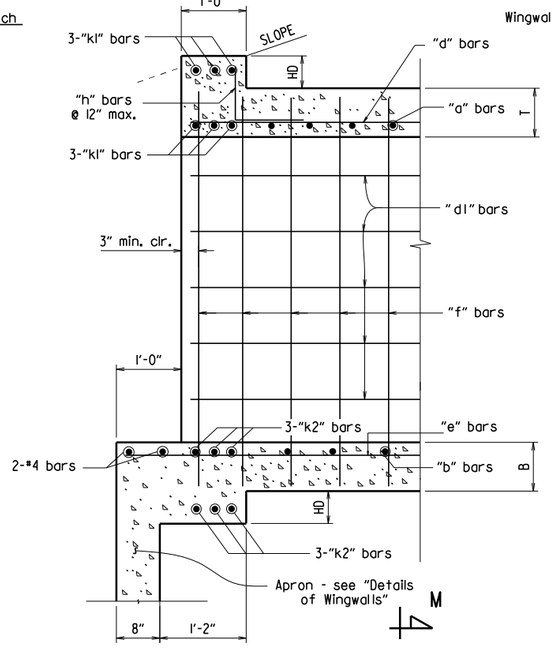

PART LONGITUDINAL SECTION N-N

(Skewed Ends)

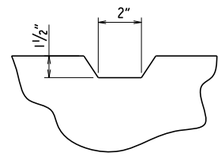

TYPICAL KEYWAY DETAIL

(All Construction Joints)

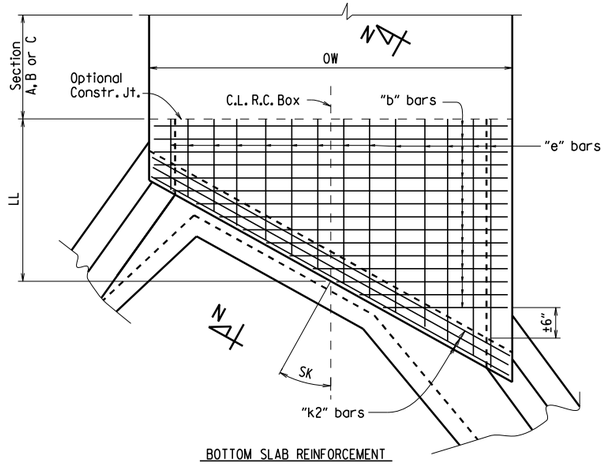

BOTTOM SLAB REINFORCEMENT

SKEWED END SECTION DETAILS

SHEET 2 OF 4
GENERAL DETAILS OF R.C. BOX CULVERT

DETAILS OF SINGLE BARREL
R.C. BOX CULVERT

SPECIAL DETAILS

STATE OF ARKANSAS
Sep 15 2023 12:20 PM
LICENSED PROFESSIONAL ENGINEER
No. 9235
CHARLES R. ELLIS

V 1.17 b040792_culvert.dgn

DATE REVISED	DATE FILMED	DATE REVISED	DATE FILMED	FED. ROAD DIST. NO.	STATE	FED. AID PROJ. NO.	SHEET NO.	TOTAL SHEETS
				6	ARK.			
				JOB NO.		040792	18	122

① SPECIAL DETAILS

① 2" clr. for fill depth (D) greater than 2 ft.
2½" clr. for fill depth (D) equal to or less than 2 ft.

Note: When top slab of culvert serves as finished roadway surface, see General Notes on Sheet 1 of 4.

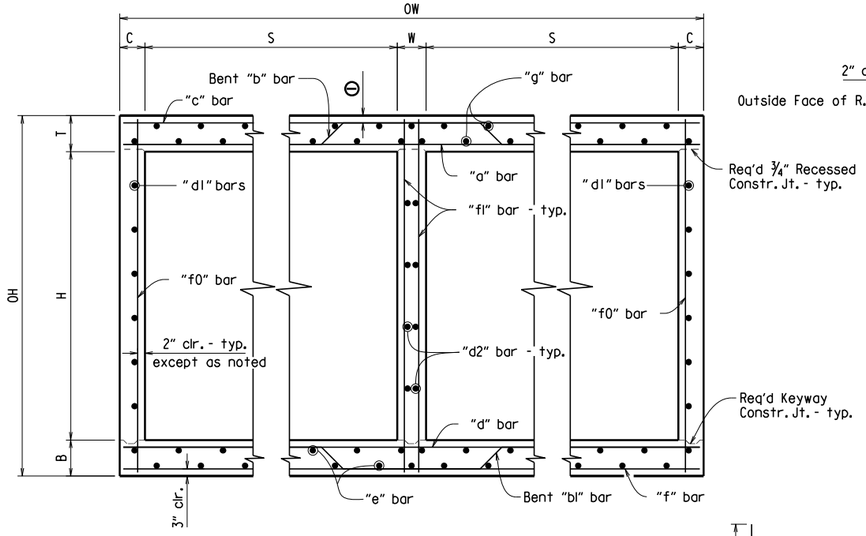

TYPICAL SECTION M-M

Top Slab
Straight "c" bars shall alternate with Bent "b" bars in top.
Straight "a" bars shall alternate with Bent "b" bars in bottom.

Bottom Slab
Straight "d" bars shall alternate with Bent "bl" bars in top.
Straight "f" bars shall alternate with Bent "bl" bars in bottom.

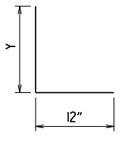

"h" bars sketch

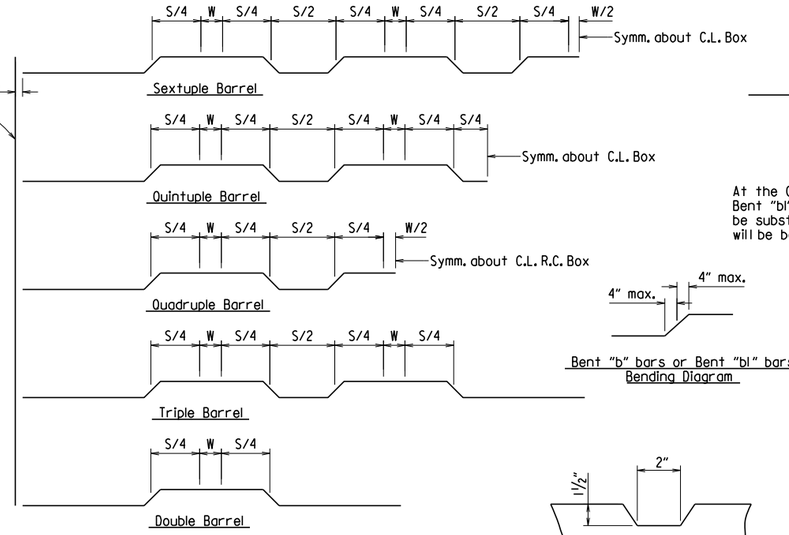

Bent "b" bars or Bent "bl" bars sketch

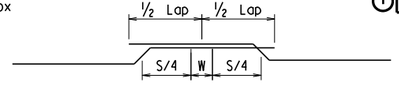

Lap Detail
For Bent "b" bars and Bent "bl" bars

Bent "b" bars or Bent "bl" bars Bending Diagram

At the Contractor's option in lieu of providing Bent "b" or Bent "bl" bars, one bar top and bottom of equivalent size may be substituted for each bent bar. Payment for the reinforcing will be based on the weight of the "b" or "bl" bar.

TYPICAL KEYWAY DETAIL
(All Construction Joints)

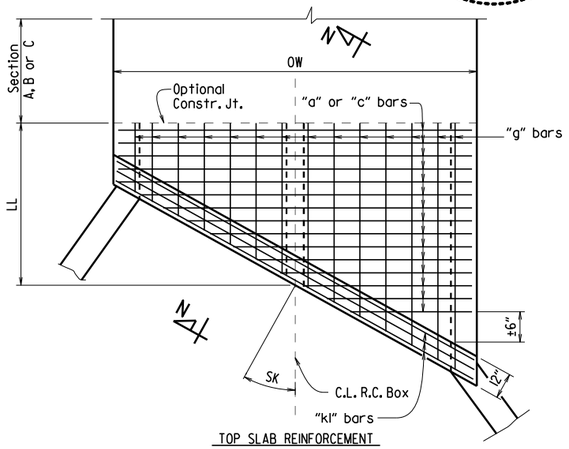

TOP SLAB REINFORCEMENT
Straight "c" bars in top.
Straight "a" bars in bottom.

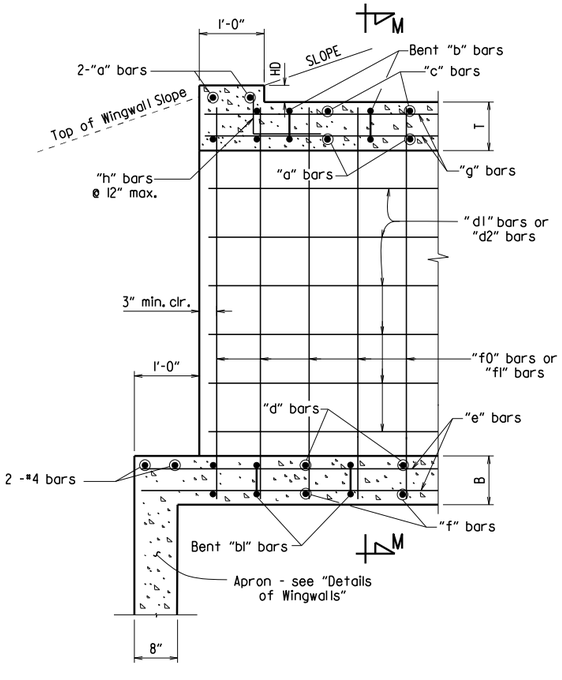

PART LONGITUDINAL SECTION
(Non-Skewed Ends)

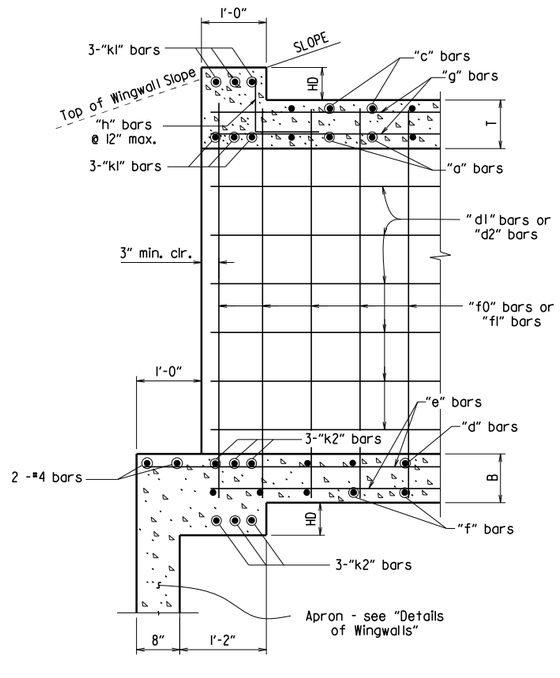

PART LONGITUDINAL SECTION N-N
(Skewed Ends)

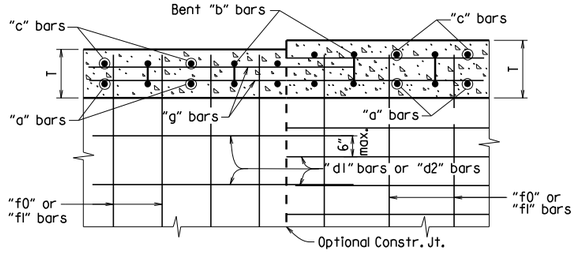

Longitudinal Bar Spacing at individual sections shall be maintained, which may result in noncontact bar laps.

LONGITUDINAL LAP DETAIL AT CHANGE IN SECTIONS
TOP SLAB SHOWN, BOTTOM SLAB SIMILAR

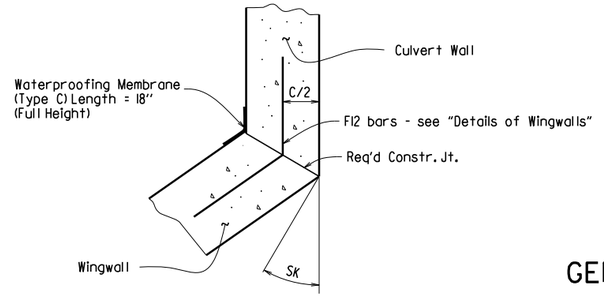

WINGWALL ATTACHMENT
See "Details of Wingwalls" for additional information and wingwall details.

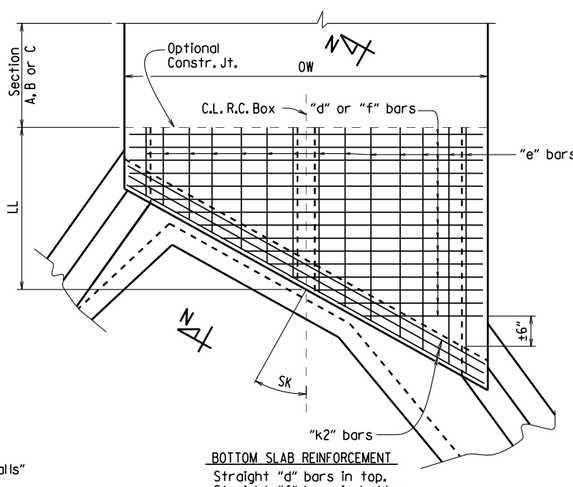

BOTTOM SLAB REINFORCEMENT
Straight "d" bars in top.
Straight "f" bars in bottom.

SKEWED END SECTION DETAILS

SHEET 3 OF 4
GENERAL DETAILS OF R.C. BOX CULVERT

DETAILS OF MULTI-BARREL R.C. BOX CULVERT

SPECIAL DETAILS

STATE OF ARKANSAS
Sep 15 2023 12:20 AM
LICENSED PROFESSIONAL ENGINEER
No. 9235
CHARLES R. ELLIS

v 1.17 b040792_culvert.dgn

DATE REVISED	DATE FILMED	DATE REVISED	DATE FILMED	FED. ROAD DIST. NO.	STATE	FED. AID PROJ. NO.	SHEET NO.	TOTAL SHEETS
				6	ARK.			
				JOB NO.		040792	19	122

(1) SPECIAL DETAILS

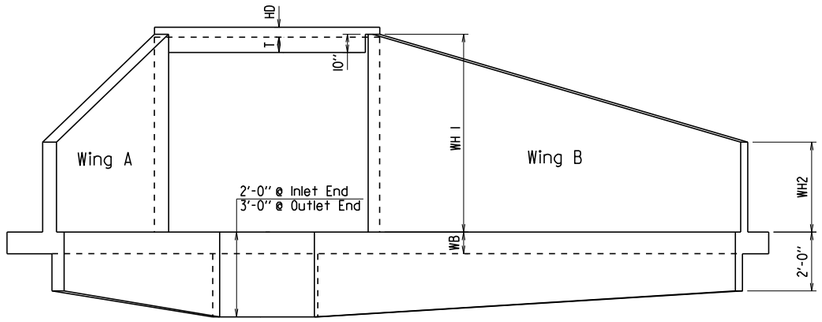

END ELEVATION
Flared Wingwalls Shown

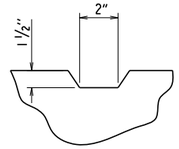

TYPICAL KEYWAY DETAIL
All Construction Joints

PART PLAN - FLARED WINGWALLS

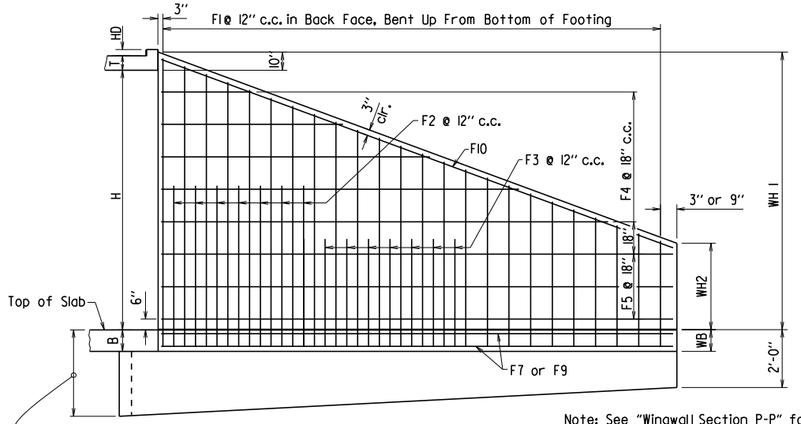

WINGWALL ELEVATION
Showing Back Face Reinforcement

Note: See "Wingwall Section P-P" for additional details and reinforcing.

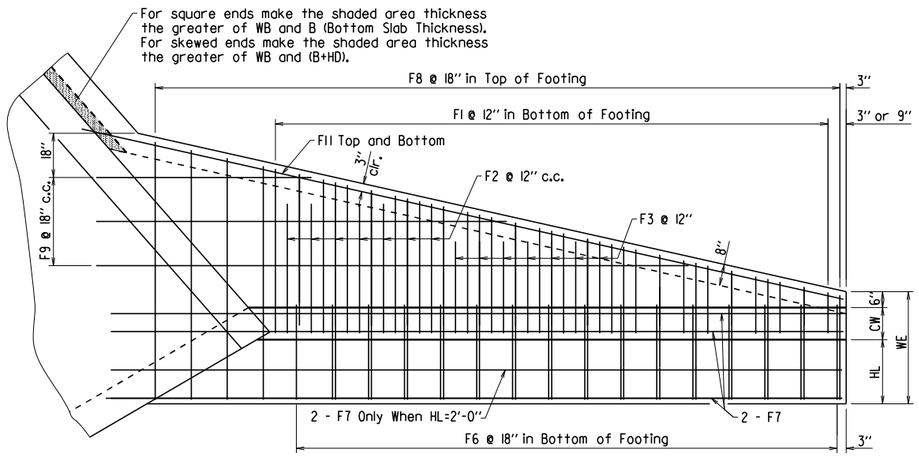

PLAN - FLARED WINGWALLS
Showing Footing Reinforcement

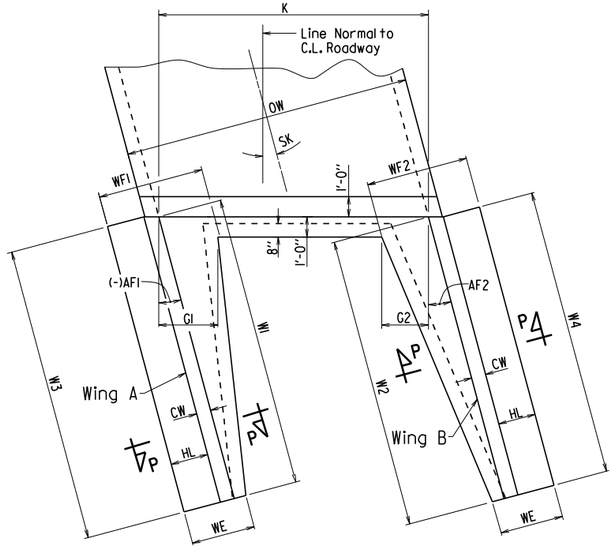

PART PLAN - PARALLEL WINGWALLS

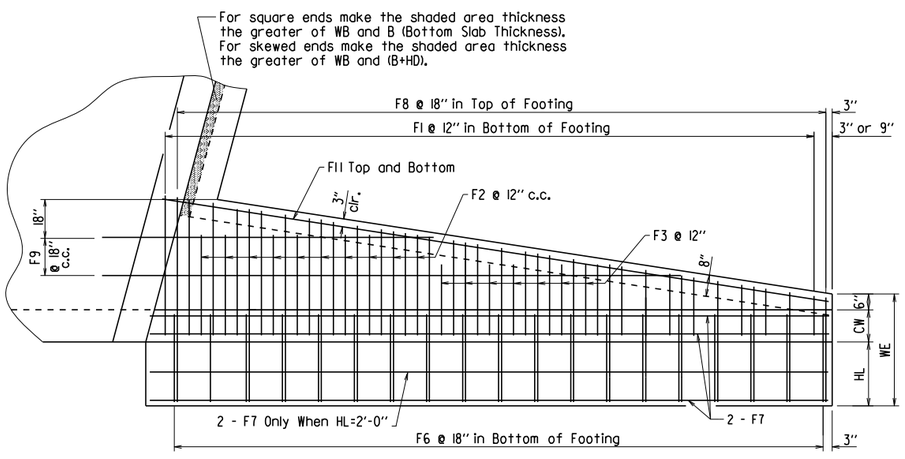

PLAN - PARALLEL WINGWALLS
Showing Footing Reinforcement

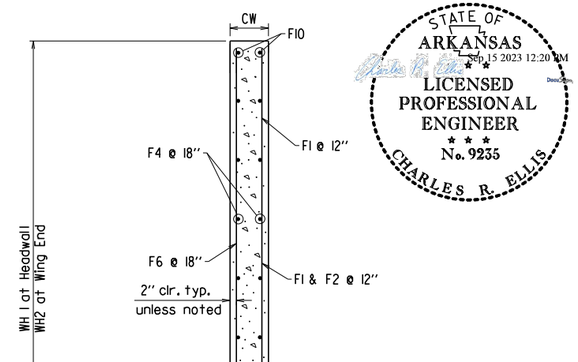

WINGWALL SECTION P-P

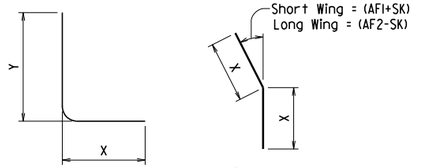

F1, F2, F3, & F6 BARS

①F12 BAR

①F12 is a straight bar for parallel wingwalls

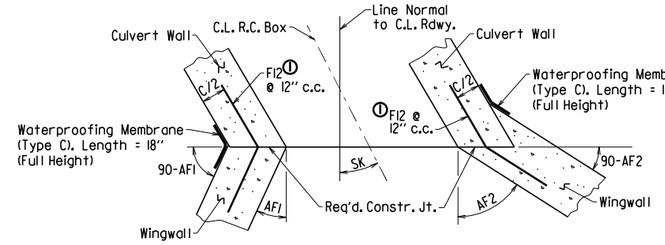

CONSTRUCTION JOINTS
Flared Wingwalls Shown

STATE OF ARKANSAS
LICENSED PROFESSIONAL ENGINEER
No. 9235
CHARLES R. ELLIS
Dec 15 2023 12:20 PM

SHEET 4 OF 4
GENERAL DETAILS OF R.C. BOX CULVERT
DETAILS OF WINGWALLS
SPECIAL DETAILS

LRFD

V LII7 b040792_culvert.dgn

DATE REVISED	DATE FILMED	DATE REVISED	DATE FILMED	FED. ROAD DIST. NO.	STATE	FED. AID PROJ. NO.	SHEET NO.	TOTAL SHEETS
				6	ARK.			
				JOB NO.		040792	20	122
				①		SPECIAL DETAILS		

INLET WINGWALL TABLE

OVER ALL WIDTH	CLEAR HEIGHT	FOOTING THK.	WING WALL THK.	BOX SKEW (DEG.)	SLOPE	HDWL LENGTH	HEEL	WALL HEIGHT		WINGWALL ANGLE (DEGREE)		FOOTING WIDTH AT WALL END	WIDTH OF WING FOOTINGS AT HDWL		FOOTING DIMENSION PARALLEL WITH HDWL		LENGTH OF WINGWALLS		LENGTH OF FOOTING HEEL	
								AT HDWL	AT WING END	WING A	WING B		WING A	WING B	WING A	WING B	WING A	WING B	WING A	WING B
OW	H	WB	CW	SK	SL	K	HL	WH1	WH2	AF1	AF2	WE	WF1	WF2	G1	G2	W1	W2	W3	W4
51'-4"	9'-0"	0'-10"	0'-9"	0	3:1	50'-0"	2'-0"	9'-10"	3'-0"	30	30	3'-3"	4'-10"	4'-10"	1'-10"	1'-10"	23'-6"	23'-6"	26'-11 1/8"	26'-11 1/8"

CLASS "S" CONCRETE (Includes apron)	REINFORCING STEEL (Includes apron and laps if required)
INLET	INLET
CU.YD	LBS.
18.63	1646

WING	F1 BAR SIZE	F1 MAX. SPACING	F1 NO. REQ'D	F1 LENGTHS VARY			F2 BAR SIZE	F2 SPACING	F2 NO. REQ'D	F2 LENGTHS	F3 BAR SIZE	F3 SPACING	F3 NO. REQ'D	F3 LENGTHS	F4 BAR SIZE	F4 SPACING	F4 NO. REQ'D	F4 LENGTHS VARY	F5 BAR SIZE	F5 SPACING	F5 NO. REQ'D	F5 LENGTHS
WING A	4	12	24	L	Min	4'-2"	4	12	11	L 6'-3"	-	-	-	L -	4	18	8	Min	4	18	4	23'-2"
					Max	12'-5"												5'-7"				
				X	Min	0'-10"				X 1'-9"				X -				Max				
					Max	2'-5"												21'-0"				
				Y	Min	3'-5"				Y 4'-7"				Y -								
					Max	10'-1"																
WING B	4	12	24	L	Min	4'-2"	4	12	11	L 6'-3"	-	-	-	L -	4	18	8	Min	4	18	4	23'-2"
					Max	12'-5"												5'-7"				
				X	Min	0'-10"				X 1'-9"				X -				Max				
					Max	2'-5"												21'-0"				
				Y	Min	3'-5"				Y 4'-7"				Y -								
					Max	10'-1"																

WING	F6 BAR SIZE	F6 SPACING	F6 NO. REQ'D	F6 LENGTHS VARY			F7 NO. REQ'D	F7 LENGTHS	F8 BAR SIZE	F8 SPACING	F8 NO. REQ'D	F8 LENGTHS VARY		F9 BAR SIZE	F9 SPACING	F9 NO. REQ'D	F9 LENGTHS	F10 BAR SIZE	F10 NO. REQ'D	F10 LENGTHS	F11 BAR SIZE	F11 NO. REQ'D	F11 LENGTHS	F12 BAR SIZE	F12 SPACING	F12 NO. REQ'D	F12 LENGTHS		REINF. STEEL QTY. PER WING (LBS)
WING A	4	18	16	L	Min	5'-11"	4	27'-9"	6	18	16	Min		4	18	2	Min 24'-3"	4	2	24'-0"	4	2	25'-8"	6	12	9	L	3'-4"	823
					Max	12'-5"						2'-9"				Max 24'-3"													
				X	Min	2'-5"																					X	1'-8"	
					Max	2'-5"						Max																	
				Y	Min	3'-7"						4'-3"				Y 24'-3"													
					Max	10'-1"																							
WING B	4	18	16	L	Min	5'-11"	4	27'-9"	6	18	16	Min		4	18	2	Min 24'-3"	4	2	24'-0"	4	2	25'-8"	6	12	9	L	3'-4"	823
					Max	12'-5"						2'-9"				Max 24'-3"													
				X	Min	2'-5"																					X	1'-8"	
					Max	2'-5"						Max																	
				Y	Min	3'-7"						4'-3"				Y 24'-3"													
					Max	10'-1"																							

Min. Bar Lap Length	
#4	1'-9"
#5	2'-2"
#6	2'-7"
#7	3'-6"
#8	4'-7"

Bar Pin Dia. Table	
#4	3"
#5	3 3/4"
#6	4 1/2"
#7	5 1/4"
#8	6"

MID-SECTION

BAR LAP TABLE

# of Long. Laps Req'd.	SL = Section Length
0	< 40.0 ft
1	>40.0 ft - 78.0 ft
2	>78.0 ft - 116.0 ft
3	>116.0 ft - 154.0 ft
4	>154.0 ft - 192.0 ft
5	>192.0 ft - 230.0 ft
6	>230.0 ft - 268.0 ft
7	>268.0 ft - 306.0 ft
8	>306.0 ft -344.0 ft



TABULAR DATA BY: BAB DATE: 5/17/2024
CHECKED BY: TMG DATE: 5/17/2024

This drawing to be used in conjunction with
SHEET 1 OF 4, "GENERAL DETAILS OF R.C. BOX CULVERT", 'GENERAL NOTES & LONGITUDINAL SECTION LENGTH SCHEDULE',
SHEET 3 OF 4, "GENERAL DETAILS OF R.C. BOX CULVERT", 'DETAILS OF MULTI-BARREL R.C. BOX CULVERT',
SHEET 4 OF 4, "GENERAL DETAILS OF R.C. BOX CULVERT", 'DETAILS OF WINGWALLS', and
STANDARD DRAWING RCB-2.
For additional information and outlet sections, see Sheet 2 of 2.

INLET SKEWED END SECTION

| SKEW (DEGREE) | SLOPE | DESIGN FILL DEPTH (FT.) | CLEAR SPAN (FT.) | CLEAR HEIGHT (FT.) | SECTION LENGTH | TOP SLAB THK. | HDWL DEPTH | BOTTOM SLAB THK. | SIDE WALL THK. | INTERIOR WALL THK. | OVER ALL WIDTH | OVER ALL HEIGHT | TOP SLAB REINFORCING STEEL "a" SIZE | "a" SPACING | "a" LENGTHS VARY | "a" NO. REQ'D | TOP SLAB REINFORCING STEEL "c" SIZE | "c" SPACING | "c" LENGTHS VARY | "c" NO. REQ'D | BOTTOM SLAB REINFORCING STEEL "d" SIZE | "d" SPACING | "d" LENGTHS VARY | "d" NO. REQ'D | BOTTOM SLAB REINFORCING STEEL "f" SIZE | "f" SPACING | "f" LENGTHS VARY | "f" NO. REQ'D | SIDE WALL REINFORCING STEEL "f0" SIZE | "f0" SPACING | "f0" NO. REQ'D | "f0" LENGTH | INTERIOR WALL REINFORCING STEEL "f1" SIZE | "f1" SPACING | "f1" NO. REQ'D | "f1" LENGTH | TOP SLAB DISTRIBUTION REINFORCING STEEL "g" SIZE | "g" SPACING | "g" NO. REQ'D | "g" LENGTHS VARY | BOTTOM SLAB DISTRIBUTION REINFORCING STEEL "e" SIZE | "e" SPACING | "e" NO. REQ'D | "e" LENGTHS VARY | SIDE WALL DISTRIBUTION REINFORCING STEEL "d1" SIZE | "d1" SPACING | "d1" NO. REQ'D | "d1" LENGTH | INTERIOR WALL DISTRIBUTION REINFORCING STEEL "d2" SIZE | "d2" SPACING | "d2" NO. REQ'D | "d2" LENGTH | CLASS "S" CONCRETE (Includes HDWL) CU. YDS. | ① REINFORCING STEEL (GR 60) (Includes HDWL) LBS. |
|---|---|---|---|---|---|---|---|---|---|---|---|---|---|---|---|---|---|---

DATE REVISED	DATE FILMED	DATE REVISED	DATE FILMED	FED. ROAD DIST. NO.	STATE	FED. AID PROJ. NO.	SHEET NO.	TOTAL SHEETS
				6	ARK.			
				JOB NO.		040792	21	122

ⓘ SPECIAL DETAILS

Charles R. Ellis — Digitally signed by Charles R. Ellis, Date: 2024.06.12 11:01:41-05'00'

STATE OF ARKANSAS — LICENSED PROFESSIONAL ENGINEER — No. 9235 — 6/12/24 — CHARLES R. ELLIS

TABULAR DATA BY: BAB DATE: 5/17/2024
CHECKED BY: TMG DATE: 5/17/2024

OUTLET WINGWALL TABLE

OVER ALL WIDTH	CLEAR HEIGHT	FOOTING THK.	WING WALL THK.	BOX SKEW (DEG.)	SLOPE	HDWL LENGTH	HEEL	WALL HEIGHT AT HDWL	WALL HEIGHT AT WING END	WINGWALL ANGLE (DEGREE) WING A	WINGWALL ANGLE (DEGREE) WING B	FOOTING WIDTH AT WALL END	WIDTH OF WING FOOTINGS AT HDWL WING A	WIDTH OF WING FOOTINGS AT HDWL WING B	FOOTING DIMENSION PARALLEL WITH HDWL WING A	FOOTING DIMENSION PARALLEL WITH HDWL WING B	LENGTH OF WINGWALLS WING A	LENGTH OF WINGWALLS WING B	LENGTH OF FOOTING HEEL WING A	LENGTH OF FOOTING HEEL WING B	CLASS "S" CONCRETE (Includes apron) OUTLET	REINFORCING STEEL (Includes apron and laps if required) OUTLET
OW	H	WB	CW	SK	SL	K	HL	WH1	WH2	AF1	AF2	WE	WF1	WF2	G1	G2	W1	W2	W3	W4	CU.YD	LBS.
51'-4"	9'-0"	0'-10"	0'-9"	0	3:1	50'-0"	2'-0"	9'-10"	3'-0"	30	30	3'-3"	4'-10"	4'-10"	1'-10"	1'-10"	23'-6"	23'-6"	26'-11 1/8"	26'-11 1/8"	20.35	1646

WING	F1 BAR SIZE	F1 MAX. SPACING	F1 NO. REQ'D	F1 LENGTHS VARY	F2 BAR SIZE	F2 SPACING	F2 NO. REQ'D	F2 LENGTHS	F3 BAR SIZE	F3 SPACING	F3 NO. REQ'D	F3 LENGTHS	F4 BAR SIZE	F4 SPACING	F4 NO. REQ'D	F4 LENGTHS VARY	F5 BAR SIZE	F5 SPACING	F5 NO. REQ'D	F5 LENGTHS	F6 BAR SIZE	F6 SPACING	F6 NO. REQ'D	F6 LENGTHS VARY	F7 BAR SIZE	F7 NO. REQ'D	F7 LENGTHS	F8 BAR SIZE	F8 SPACING	F8 NO. REQ'D	F8 LENGTHS VARY	F9 BAR SIZE	F9 SPACING	F9 NO. REQ'D	F9 LENGTHS	F10 BAR SIZE	F10 NO. REQ'D	F10 LENGTHS	F11 BAR SIZE	F11 NO. REQ'D	F11 LENGTHS	F12 BAR SIZE	F12 SPACING	F12 NO. REQ'D	F12 LENGTHS	REINF. STEEL QTY. PER WING (LBS)
WING A	4	12	24	L Min 4'-2" / Max 12'-5"	4	12	11	L 6'-3"	-	-	-	L -	4	18	8	Min 5'-7" / Max 21'-0"	4	18	4	23'-2"	4	18	16	L Min 5'-11" / Max 12'-5"	4	8	27'-9"	6	18	16	Min 2'-9" / Max 4'-3"	4	18	2	Min 24'-3" / Max 24'-3"	4	2	24'-0"	4	2	25'-8"	6	12	9	L 3'-4"	823
				X Min 0'-10" / Max 2'-5"				X 1'-9"				X -												X Min 2'-5" / Max 2'-5"																					X 1'-8"	
				Y Min 3'-5" / Max 10'-1"				Y 4'-7"				Y -												Y Min 3'-7" / Max 10'-1"																						
WING B	4	12	24	L Min 4'-2" / Max 12'-5"	4	12	11	L 6'-3"	-	-	-	L -	4	18	8	Min 5'-7" / Max 21'-0"	4	18	4	23'-2"	4	18	16	L Min 5'-11" / Max 12'-5"	4	8	27'-9"	6	18	16	Min 2'-9" / Max 4'-3"	4	18	2	Min 24'-3" / Max 24'-3"	4	2	24'-0"	4	2	25'-8"	6	12	9	L 3'-4"	823
				X Min 0'-10" / Max 2'-5"				X 1'-9"				X -												X Min 2'-5" / Max 2'-5"																					X 1'-8"	
				Y Min 3'-5" / Max 10'-1"				Y 4'-7"				Y -												Y Min 3'-7" / Max 10'-1"																						

Min. Bar Lap Length	
#4	1'-9"
#5	2'-2"
#6	2'-7"
#7	3'-6"
#8	4'-7"

Bar Pin Dia. Table	
#4	3"
#5	3 3/4"
#6	4 1/2"
#7	5 1/4"
#8	6"

ⓘ Any Bar Lap Required for the Skewed End Section shall be considered subsidiary to the item "Reinforcing Steel - Roadway (Grade 60)."

OUTLET SKEWED END SECTION

SKEW (DEGREE) SK	SLOPE SL	DESIGN FILL DEPTH (FT.) D	CLEAR SPAN (FT.) S	CLEAR HEIGHT (FT.) H	SECTION LENGTH LL	TOP SLAB THK. T	HDWL DEPTH HD	BOTTOM SLAB THK. B	SIDE WALL THK. C	INTERIOR WALL THK. W	OVER ALL WIDTH OW	OVER ALL HEIGHT OH	TOP SLAB REINFORCING STEEL "a" SIZE	"a" SPACING	"a" LENGTHS VARY	"a" NO. REQ'D	TOP SLAB REINFORCING STEEL "c" SIZE	"c" SPACING	"c" LENGTHS VARY	"c" NO. REQ'D	BOTTOM SLAB REINFORCING STEEL "d" SIZE	"d" SPACING	"d" LENGTHS VARY	"d" NO. REQ'D	BOTTOM SLAB REINFORCING STEEL "f" SIZE	"f" SPACING	"f" LENGTHS VARY	"f" NO. REQ'D	SIDE WALL REINFORCING STEEL "f0" SIZE	"f0" SPACING	"f0" NO. REQ'D	"f0" LENGTH	INTERIOR WALL REINFORCING STEEL "f1" SIZE	"f1" SPACING	"f1" NO. REQ'D	"f1" LENGTH	TOP SLAB DISTRIBUTION REINFORCING STEEL "g" SIZE	"g" SPACING	"g" NO. REQ'D	"g" LENGTHS VARY	BOTTOM SLAB DISTRIBUTION REINFORCING STEEL "e" SIZE	"e" SPACING	"e" NO. REQ'D	"e" LENGTHS VARY	SIDE WALL DISTRIBUTION REINFORCING STEEL "d1" SIZE	"d1" SPACING	"d1" NO. REQ'D	"d1" LENGTH	INTERIOR WALL DISTRIBUTION REINFORCING STEEL "d2" SIZE	"d2" SPACING	"d2" NO. REQ'D	"d2" LENGTH
															Max / Min								Max / Min						Max / Min						Max / Min						Max / Min						Max / Min						Max / Min						Max / Min			

"k1" HDWL BARS SIZE	"k1" HDWL BARS LENGTH	"k1" HDWL BARS NO. REQ'D	"k2" HDWL BARS SIZE	"k2" HDWL BARS LENGTH	"k2" HDWL BARS NO. REQ'D	"h" HDWL BARS SIZE	"h" HDWL BARS LENGTH	"h" HDWL BARS Y	"h" HDWL BARS NO. REQ'D

CLASS "S" CONCRETE (Includes HDWL) CU. YDS.	REINFORCING STEEL (GR 60) ⓘ (Includes HDWL) LBS.

OUTLET SLOPE SECTION(S)

R.C. BOX SECTION	DESIGN FILL DEPTH (FT.) D	CLEAR SPAN (FT.) S	CLEAR HEIGHT (FT.) H	TOP SLAB THK. T	BOTTOM SLAB THK B	SIDE WALL THK C	INTERIOR WALL THK. W	OVER ALL WIDTH OW	OVER ALL HEIGHT OH	SECTION LENGTH (FT.) SL	TOP SLAB REINFORCING STEEL LENGTH = OW - 4" + BENDS "a" SIZE	"a" L	Bent "b" SIZE	Bent "b" L	"c" SIZE	"c" L	TOP SLAB REINFORCING STEEL SPACING	TOP SLAB REINFORCING STEEL NO. REQ'D	BOTTOM SLAB REINFORCING STEEL LENGTH = OW - 4" + BENDS "d" SIZE	"d" L	Bent "b1" SIZE	Bent "b1" L	"f" SIZE	"f" L	BOTTOM SLAB REINFORCING STEEL SPACING	BOTTOM SLAB REINFORCING STEEL NO. REQ'D	SIDE WALL REINFORCING STEEL "f0" LENGTH = OH - 4" SIZE	"f0" SPACING	"f0" NO. REQ'D	"f0" LENGTH	INTERIOR WALL REINFORCING STEEL "f1" LENGTH = OH - 4" SIZE	"f1" SPACING	"f1" NO. REQ'D	"f1" LENGTH	TOP SLAB DISTRIBUTION REINF. STEEL "g" LENGTH = SL SIZE	"g" SPACING	"g" NO. REQ'D	BOTTOM SLAB DISTRIBUTION REINF. STEEL "e" LENGTH = SL SIZE	"e" SPACING	"e" NO. REQ'D	SIDE WALL DISTRIBUTION REINF. STEEL "d1" LENGTH = SL SIZE	"d1" SPACING	"d1" NO. REQ'D	INTERIOR WALL DISTRIBUTION REINF. STEEL "d2" LENGTH = SL SIZE	"d2" SPACING	"d2" NO. REQ'D
	D	S	H	T	B	C	W	OW	OH	SL																		

DATE REVISED	DATE FILMED	DATE REVISED	DATE FILMED

FED.RD. DIST.NO.	STATE	FED.AID PROJ.NO.	SHEET NO.	TOTAL SHEETS
6	ARK.			
JOB NO.		040792	22	122

(2) TEMPORARY EROSION CONTROL DETAILS

STATE OF ARKANSAS
LICENSED PROFESSIONAL ENGINEER
No. 11425
TRINITY D. SMITH
08-15-2024

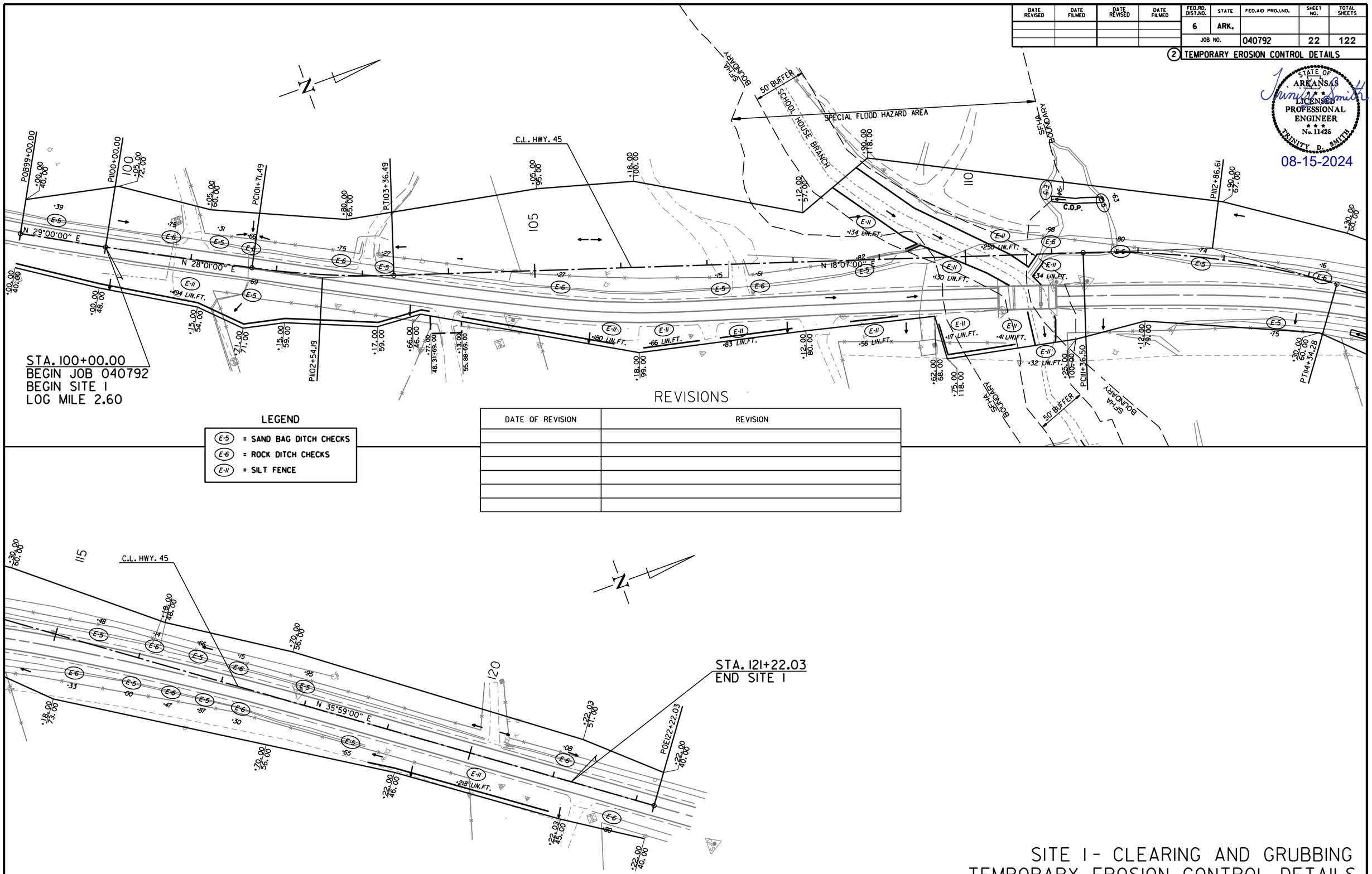

STA. 100+00.00
BEGIN JOB 040792
BEGIN SITE 1
LOG MILE 2.60

STA. 121+22.03
END SITE 1

REVISIONS

DATE OF REVISION	REVISION

R038049 8/7/2024
R040792.DGN

SITE 1- CLEARING AND GRUBBING
TEMPORARY EROSION CONTROL DETAILS

DATE REVISED	DATE FILMED	DATE REVISED	DATE FILMED

FED.RD. DIST.NO.	STATE	FED.AID PROJ.NO.	SHEET NO.	TOTAL SHEETS
6	ARK.			
JOB NO.		040792	23	122

(2) TEMPORARY EROSION CONTROL DETAILS

STATE OF ARKANSAS
LICENSED PROFESSIONAL ENGINEER
No. 11425
TRINITY D. SMITH

08-15-2024

STA. 303+00.00
BEGIN JOB SITE 2
LOG MILE 6.68

C.L. HWY. 45

SPECIAL FLOOD HAZARD AREA

SFHA BOUNDARY

JOHNSON BRANCH

50' BUFFER

N 3°11'04" E

N 21°49'54" E

PI 307+61.66
Δ=0°21'10" LT.

80 LIN.FT.

50 LIN.FT.

77 LIN.FT.

260 LIN.FT.

156 LIN.FT.

STA. 316+00.00
END SITE 2

LEGEND

E-5	= SAND BAG DITCH CHECKS
E-6	= ROCK DITCH CHECKS
E-11	= SILT FENCE

REVISIONS

DATE OF REVISION	REVISION

SITE 2 - CLEARING AND GRUBBING
TEMPORARY EROSION CONTROL DETAILS

RD38049 8/7/2024
R040792.DGN

DATE REVISED	DATE FILMED	DATE REVISED	DATE FILMED

FED.RD. DIST.NO.	STATE	FED.AID PROJ.NO.	SHEET NO.	TOTAL SHEETS
6	ARK.			
JOB NO.		040792	24	122

(2) TEMPORARY EROSION CONTROL DETAILS

STATE OF ARKANSAS
LICENSED PROFESSIONAL ENGINEER
No. 11425
TRINITY D. SMITH

08-15-2024

STA. 501+00.00
BEGIN JOB SITE 3
LOG MILE 7.54

C.L. HWY. 45

SPECIAL FLOOD HAZARD AREA

SFHA BOUNDARY

50' BUFFER

PI503+83.64
Δ = 00°09'33" LT.

PC510+22.24

PT512+48.00

POE515+14.99

N 2°51'49" E

N 2°12'16" E

N 11°58'13" W

PI511+35.74

STA. 513+75.00
END SITE 3
END JOB 040792

REVISIONS

DATE OF REVISION	REVISION

LEGEND

- (E-5) = SAND BAG DITCH CHECKS
- (E-6) = ROCK DITCH CHECKS
- (E-11) = SILT FENCE

SITE 3 - CLEARING AND GRUBBING
TEMPORARY EROSION CONTROL DETAILS

RD38049 8/7/2024
R040792.DGN

DATE REVISED	DATE FILMED	DATE REVISED	DATE FILMED

FED.RD. DIST.NO.	STATE	FED.AID PROJ.NO.	SHEET NO.	TOTAL SHEETS
6	ARK.			
JOB NO.		040792	25	122

(2) TEMPORARY EROSION CONTROL DETAILS

STATE OF ARKANSAS
LICENSED PROFESSIONAL ENGINEER
No. 11425
TRINITY D. SMITH
08-15-2024

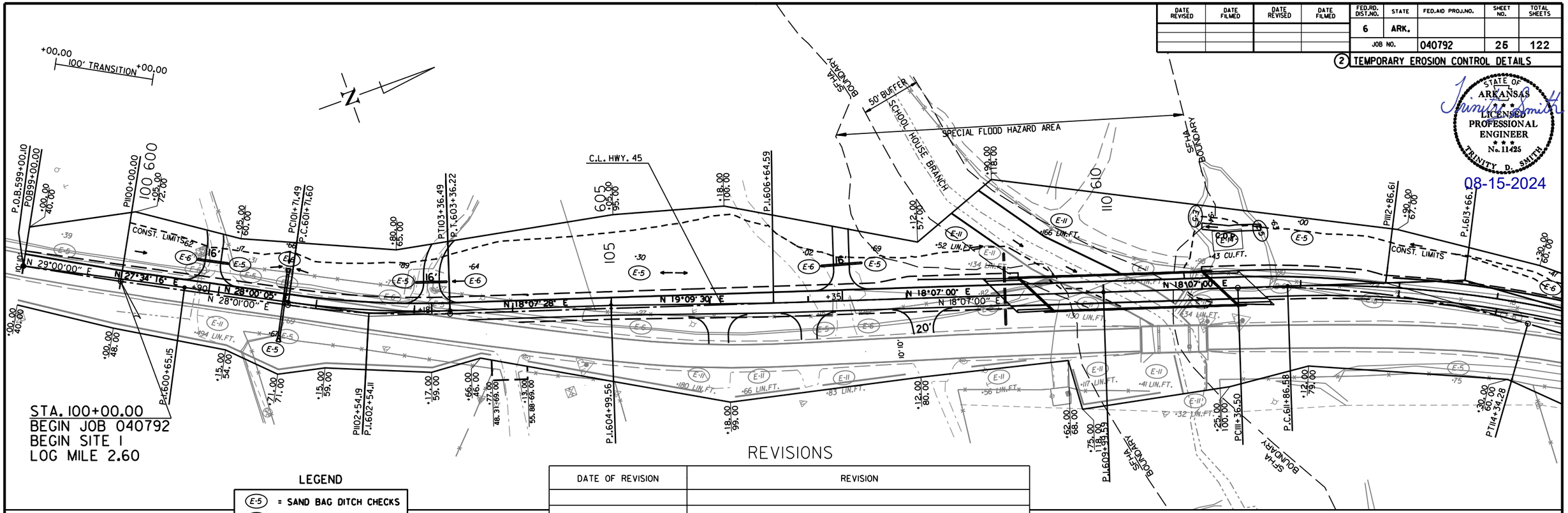

LEGEND

- (E-5) = SAND BAG DITCH CHECKS
- (E-6) = ROCK DITCH CHECKS
- (E-11) = SILT FENCE
- (E-14) = SEDIMENT BASIN
  *XX CU.FT.

REVISIONS

DATE OF REVISION	REVISION

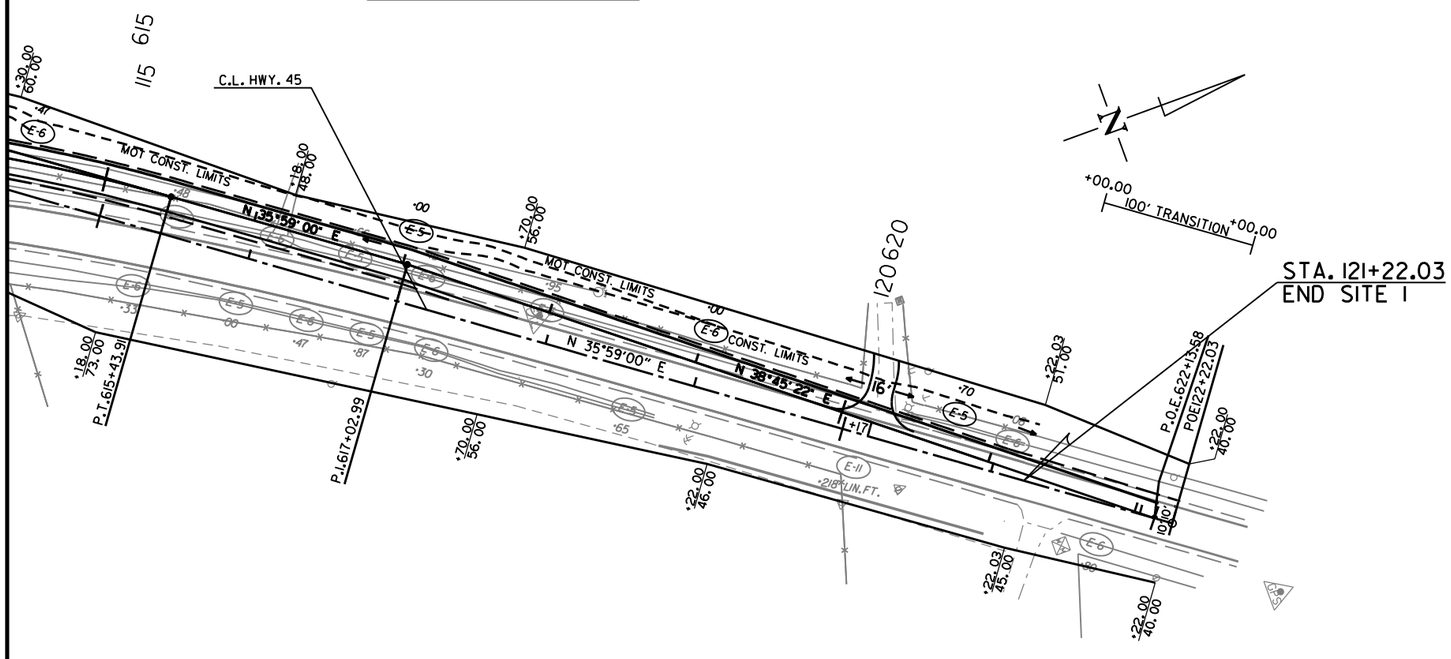

SITE 1 - STAGE 1
TEMPORARY EROSION CONTROL DETAILS

RD38049 8/7/2024
R040792.DGN

DATE REVISED	DATE FILMED	DATE REVISED	DATE FILMED

FED.RD. DIST.NO.	STATE	FED.AID PROJ.NO.	SHEET NO.	TOTAL SHEETS
6	ARK.			
JOB NO.		040792	26	122

(2) TEMPORARY EROSION CONTROL DETAILS

STATE OF ARKANSAS
LICENSED PROFESSIONAL ENGINEER
No. 11425
TRINITY D. SMITH
08-15-2024

STA. 303+00.00
BEGIN JOB SITE 2
LOG MILE 6.68

STA. 316+00.00
END SITE 2

LEGEND

- (E-5) = SAND BAG DITCH CHECKS
- (E-6) = ROCK DITCH CHECKS
- (E-11) = SILT FENCE

REVISIONS

DATE OF REVISION	REVISION

RD38049 8/7/2024
R040792.DGN

SITE 2 - STAGE I
TEMPORARY EROSION CONTROL DETAILS

DATE REVISED	DATE FILMED	DATE REVISED	DATE FILMED

FED.RD. DIST.NO.	STATE	FED.AID PROJ.NO.	SHEET NO.	TOTAL SHEETS
6	ARK.			
JOB NO.		040792	27	122

(2) TEMPORARY EROSION CONTROL DETAILS

STATE OF ARKANSAS
LICENSED PROFESSIONAL ENGINEER
No. 11425
TRINITY D. SMITH

08-15-2024

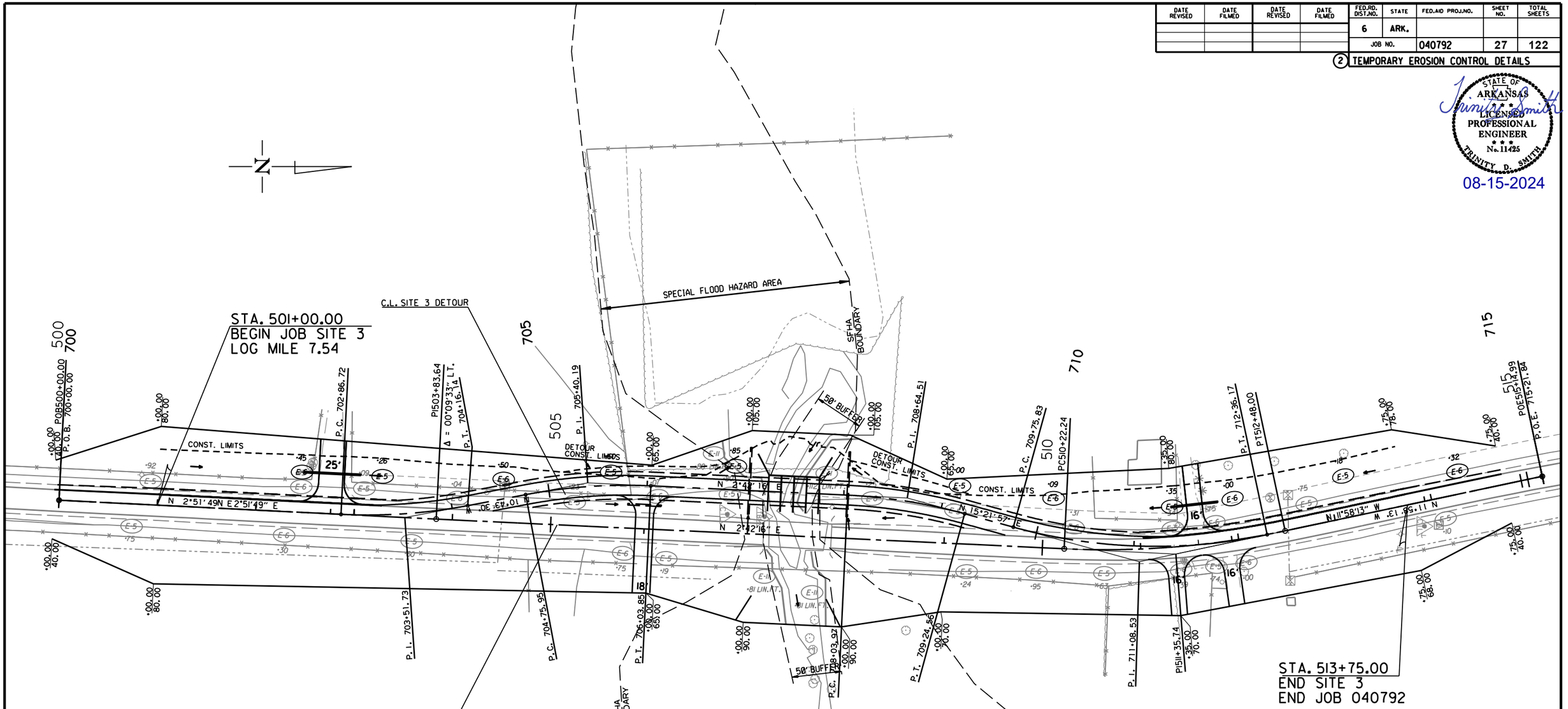

REVISIONS

DATE OF REVISION	REVISION

LEGEND

- (E-5) = SAND BAG DITCH CHECKS
- (E-6) = ROCK DITCH CHECKS
- (E-11) = SILT FENCE

SITE 3 - STAGE I
TEMPORARY EROSION CONTROL DETAILS

ba42315 8/9/2024
R040792.DGN

DATE REVISED	DATE FILMED	DATE REVISED	DATE FILMED	FED.RD. DIST.NO.	STATE	FED.AID PROJ.NO.	SHEET NO.	TOTAL SHEETS
				6	ARK.			
				JOB NO.		040792	28	122

(2) TEMPORARY EROSION CONTROL DETAILS

STATE OF ARKANSAS
LICENSED PROFESSIONAL ENGINEER
No. 11425
TRINITY D. SMITH
08-15-2024

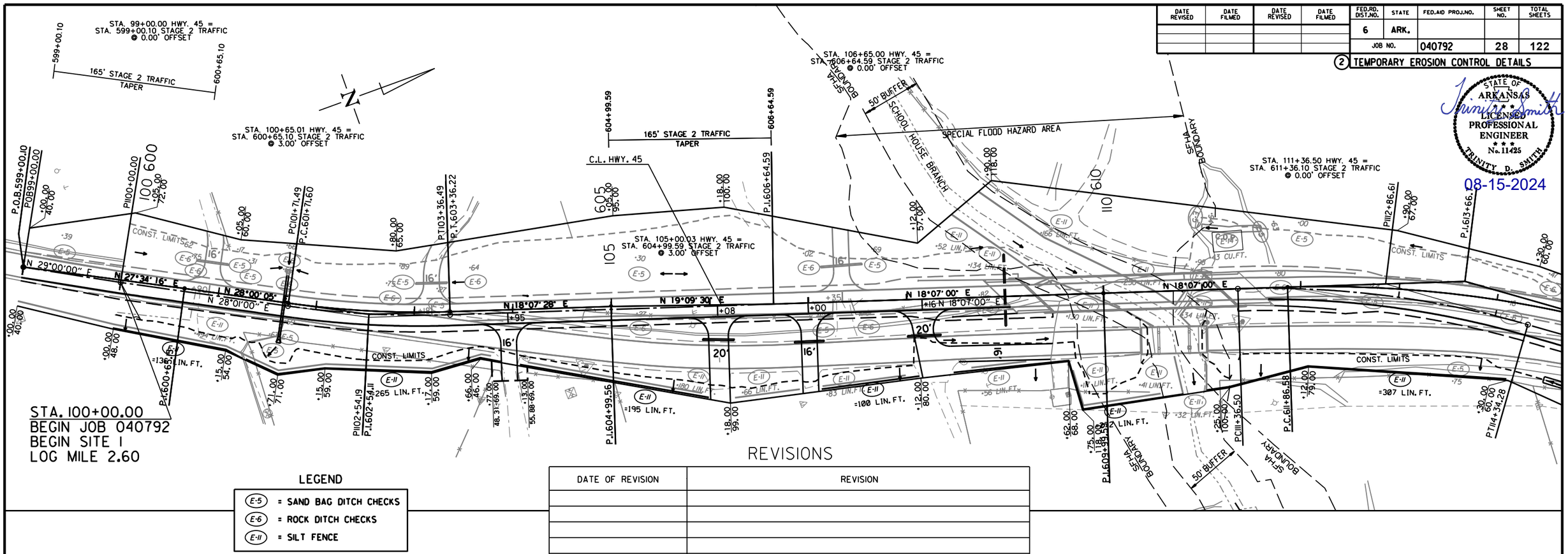

LEGEND

- (E-5) = SAND BAG DITCH CHECKS
- (E-6) = ROCK DITCH CHECKS
- (E-II) = SILT FENCE

REVISIONS

DATE OF REVISION	REVISION

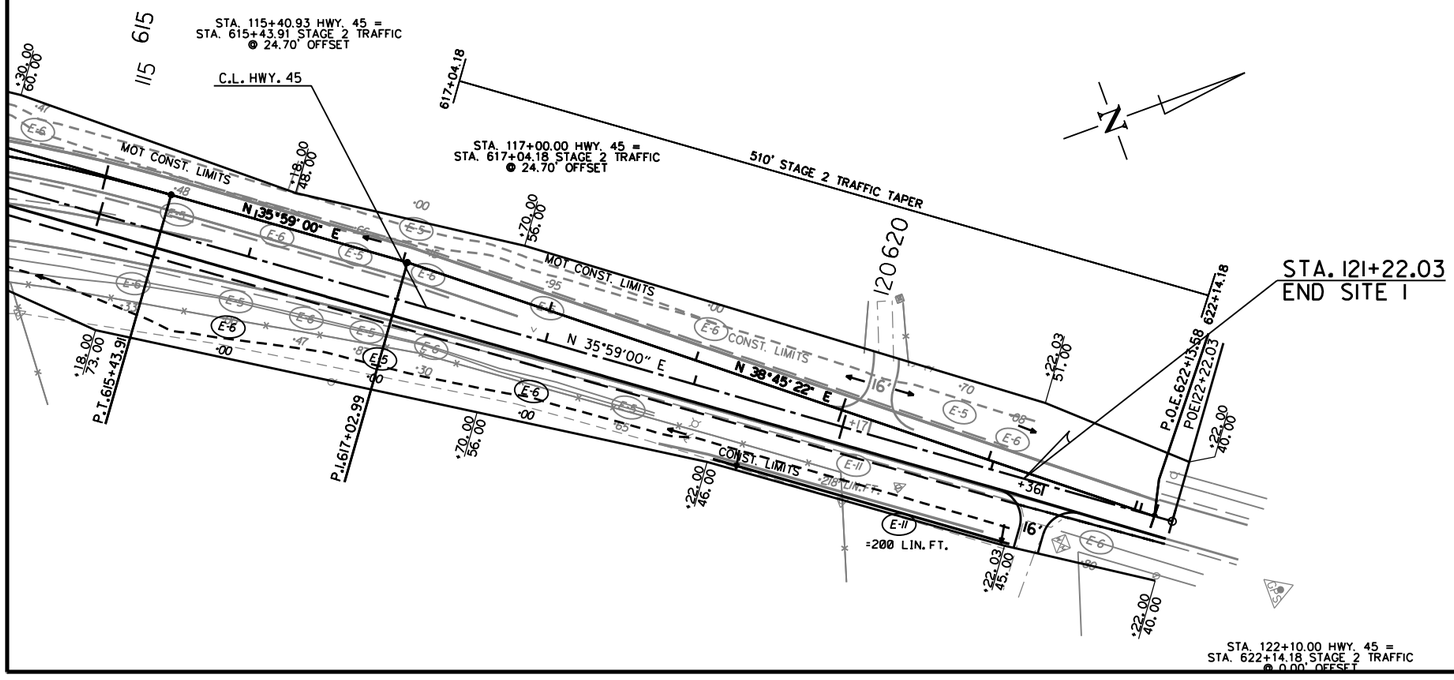

SITE 1- STAGE 2
TEMPORARY EROSION CONTROL DETAILS

R038049 8/7/2024
R040792.DGN

DATE REVISED	DATE FILMED	DATE REVISED	DATE FILMED	FED.RD. DIST.NO.	STATE	FED.AID PROJ.NO.	SHEET NO.	TOTAL SHEETS
				6	ARK.			
				JOB NO.		040792	29	122

(2) TEMPORARY EROSION CONTROL DETAILS

STATE OF ARKANSAS
LICENSED PROFESSIONAL ENGINEER
No. 11425
TRINITY D. SMITH
08-15-2024

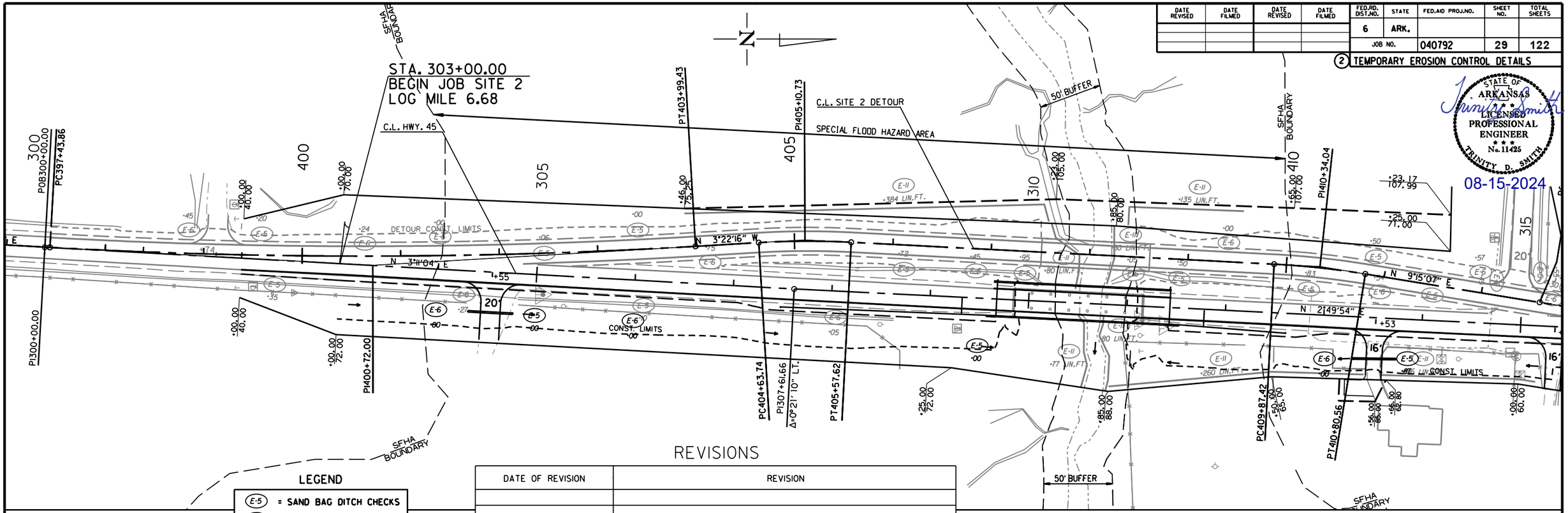

REVISIONS

DATE OF REVISION	REVISION

LEGEND

- (E-5) = SAND BAG DITCH CHECKS
- (E-6) = ROCK DITCH CHECKS
- (E-11) = SILT FENCE

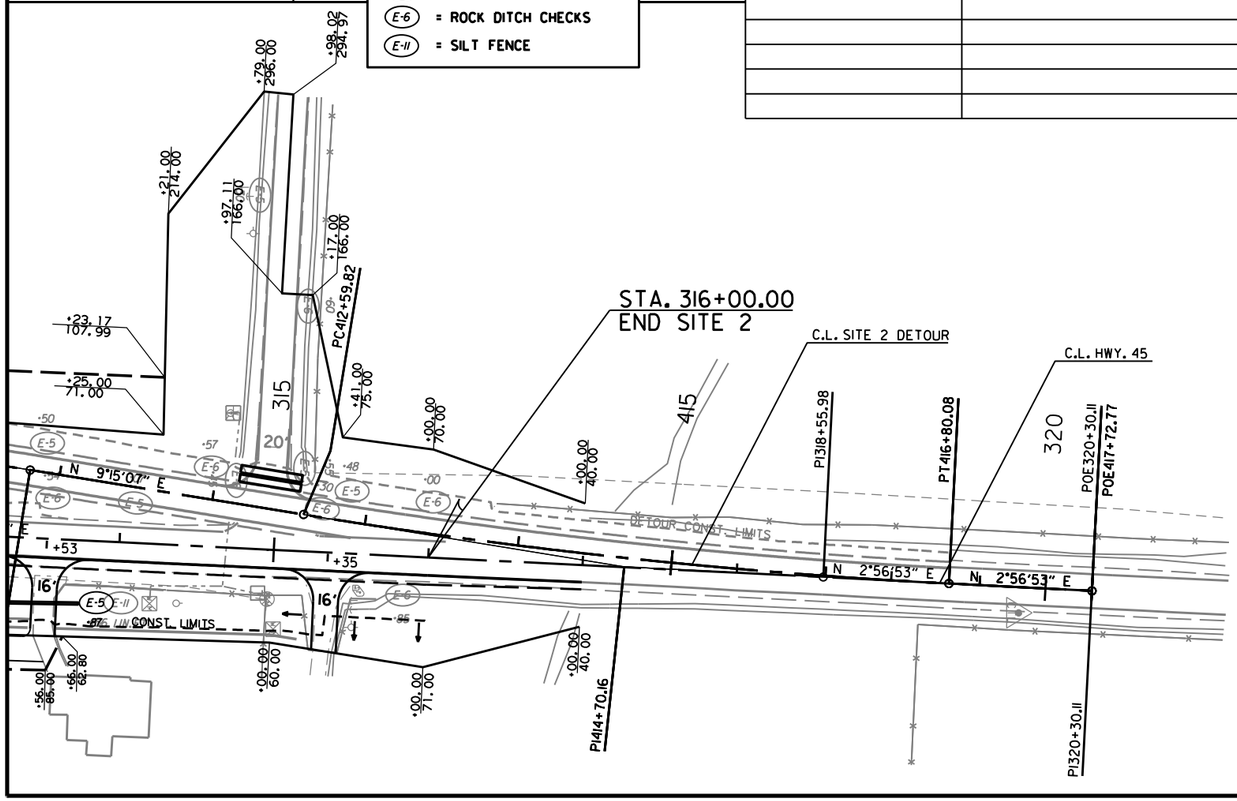

SITE 2 - STAGE 2
TEMPORARY EROSION CONTROL DETAILS

RD38049 8/7/2024
R040792.DGN

DATE REVISED	DATE FILMED	DATE REVISED	DATE FILMED

FED.RD. DIST.NO.	STATE	FED.AID PROJ.NO.	SHEET NO.	TOTAL SHEETS
6	ARK.			
JOB NO.		040792	30	122

(2) TEMPORARY EROSION CONTROL DETAILS

STATE OF ARKANSAS
LICENSED PROFESSIONAL ENGINEER
No. 11425
TRINITY D. SMITH

Trinity Smith
08-15-2024

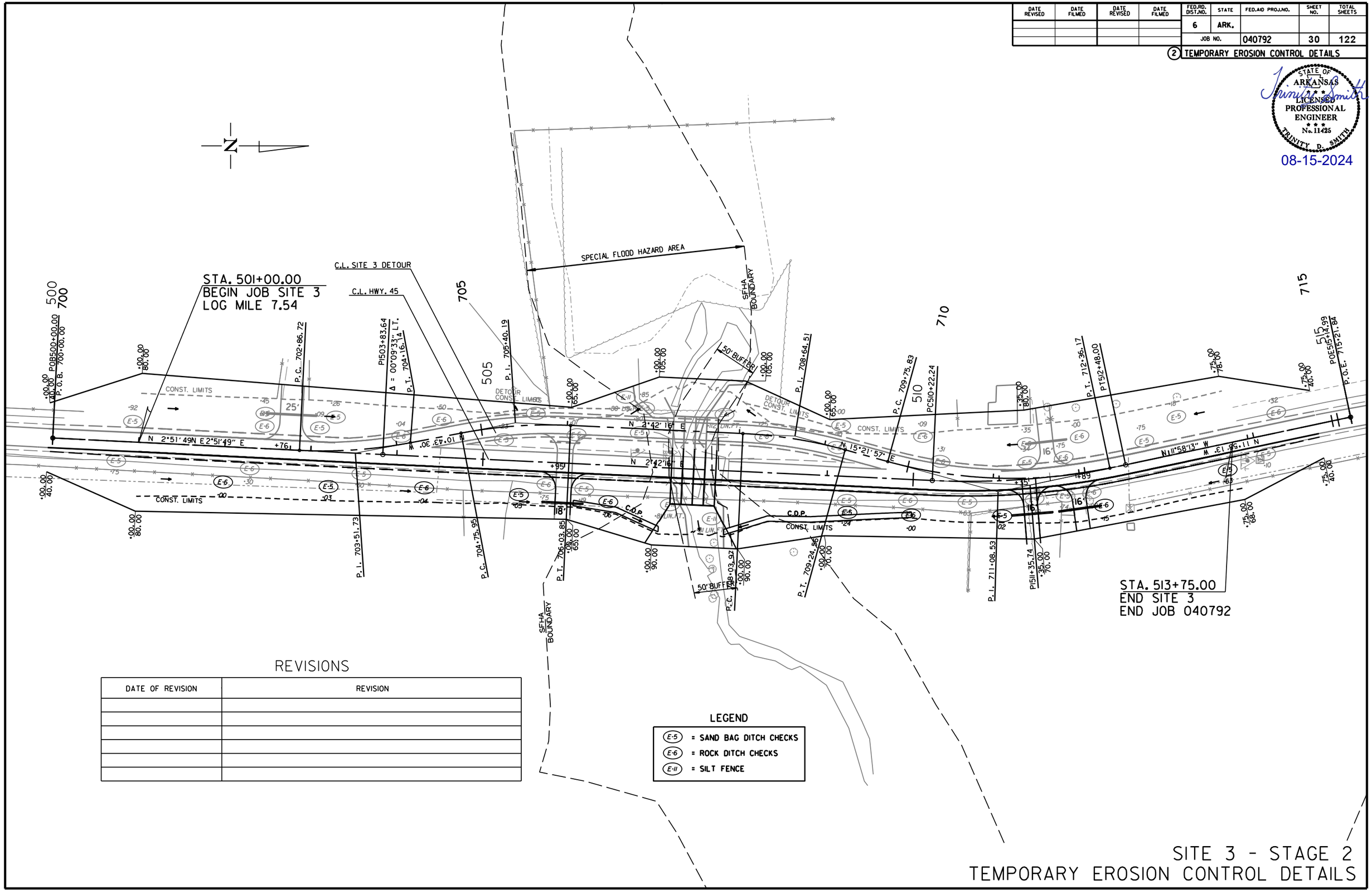

REVISIONS

DATE OF REVISION	REVISION

LEGEND

- (E-5) = SAND BAG DITCH CHECKS
- (E-6) = ROCK DITCH CHECKS
- (E-11) = SILT FENCE

SITE 3 - STAGE 2
TEMPORARY EROSION CONTROL DETAILS

RD38049 8/7/2024
R040792.DGN

DATE REVISED	DATE FILMED	DATE REVISED	DATE FILMED

FED.RD. DIST.NO.	STATE	FED.AID PROJ.NO.	SHEET NO.	TOTAL SHEETS
6	ARK.			
JOB NO.		040792	31	122

(2) TEMPORARY EROSION CONTROL DETAILS

STATE OF ARKANSAS
LICENSED PROFESSIONAL ENGINEER
No. 11425
TRINITY D. SMITH
08-15-2024

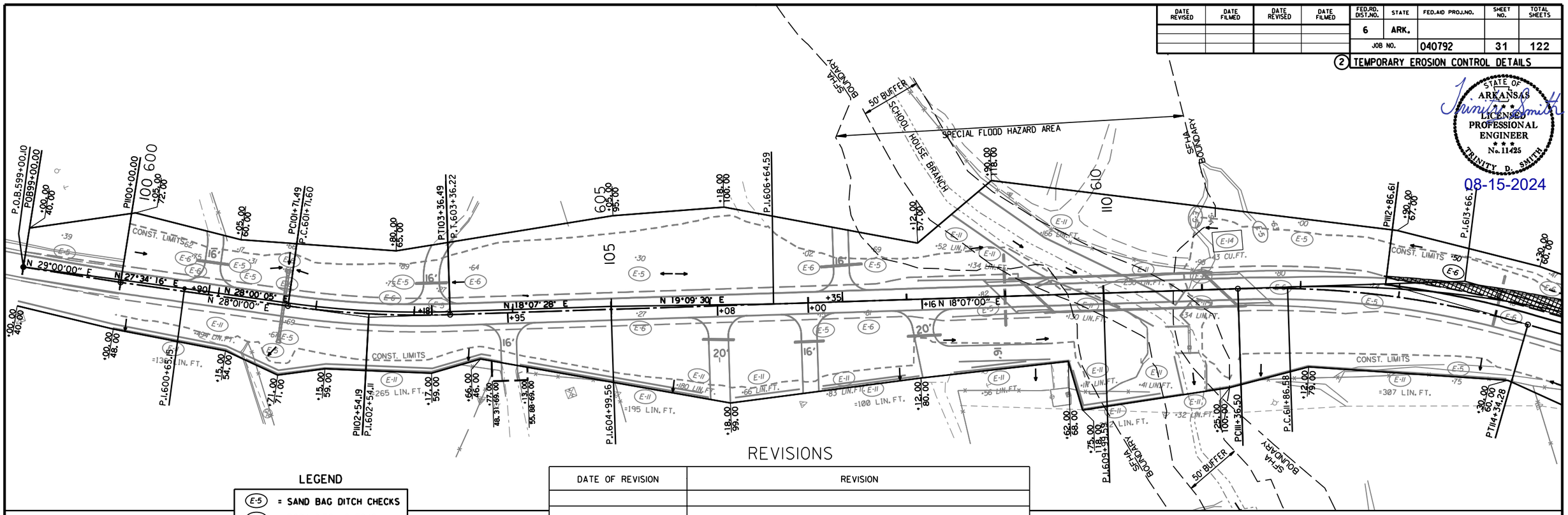

LEGEND

- (E-5) = SAND BAG DITCH CHECKS
- (E-6) = ROCK DITCH CHECKS
- (E-11) = SILT FENCE

REVISIONS

DATE OF REVISION	REVISION

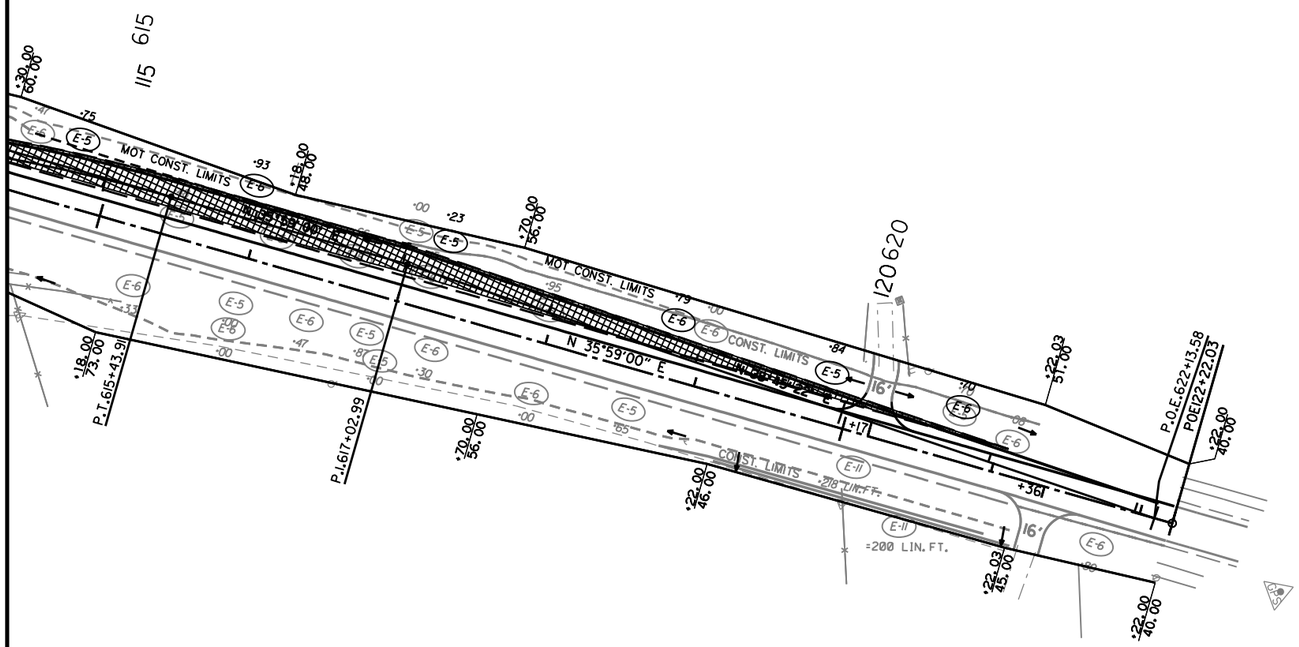

SITE 1- STAGE 3
TEMPORARY EROSION CONTROL DETAILS

RD38049 8/7/2024
R040792.DGN

DATE REVISED	DATE FILMED	DATE REVISED	DATE FILMED

FED.RD. DIST.NO.	STATE	FED.AID PROJ.NO.	SHEET NO.	TOTAL SHEETS
6	ARK.			
JOB NO.		040792	32	122

(2) TEMPORARY EROSION CONTROL DETAILS

STATE OF ARKANSAS
LICENSED PROFESSIONAL ENGINEER
No. 11425
TRINITY D. SMITH
Trinity Smith
08-15-2024

STA. 303+00.00
BEGIN JOB SITE 2
LOG MILE 6.68

C.L. HWY. 45

SPECIAL FLOOD HAZARD AREA

JOHNSON BRANCH

50' BUFFER

SFHA BOUNDARY

DETOUR CONST. LIMITS

CONST. LIMITS

P.O.B. 300+00.00

PC 397+43.86

PI 300+00.00

PI 400+72.00

PT 403+99.43

PI 405+10.73

PI 410+34.04

PC 409+87.42

PT 416+80.08

PC 404+63.74

PI 307+61.66

Δ=0°21'10" LT.

PT 405+57.62

PC 412+59.82

PI 318+55.98

POE 320+30.11

POE 417+72.77

PT 414+70.16

PI 320+30.11

N 3°11'04" E

N 3°22'16" W

N 9°15'07" E

N 2°49'54" E

N 2°56'53" E

STA. 302+75.00 HWY. 45
STAGE 3 TRAFFIC
@ 0.00' OFFSET FROM C.L.

225' STAGE 3 TRAFFIC TAPER

STA. 305+00.00 HWY. 45
STAGE 3 TRAFFIC
@ 5.00' OFFSET FROM C.L.

STA. 307+00.00 HWY. 45
STAGE 3 TRAFFIC
@ 5.00' OFFSET FROM C.L.

100' STAGE 3 TRAFFIC TAPER

STA. 308+00.00 HWY. 45
STAGE 3 TRAFFIC
@ 4.00' OFFSET FROM C.L.

STA. 313+00.00 HWY. 45
STAGE 3 TRAFFIC
@ 4.00' OFFSET FROM C.L.

180' STAGE 3 TRAFFIC TAPER

STA. 314+80.00 HWY. 45
STAGE 3 TRAFFIC
@ 0.00' OFFSET FROM C.L.

STA. 316+00.00
END SITE 2

LEGEND

- (E-5) = SAND BAG DITCH CHECKS
- (E-6) = ROCK DITCH CHECKS
- (E-11) = SILT FENCE

REVISIONS

DATE OF REVISION	REVISION

RD38049 8/7/2024
R040792.DGN

SITE 2 - STAGE 3
TEMPORARY EROSION CONTROL DETAILS

DATE REVISED	DATE FILMED	DATE REVISED	DATE FILMED	FED.RD. DIST.NO.	STATE	FED.AID PROJ.NO.	SHEET NO.	TOTAL SHEETS
				6	ARK.			
				JOB NO.		040792	33	122

(2) TEMPORARY EROSION CONTROL DETAILS

STATE OF ARKANSAS
LICENSED PROFESSIONAL ENGINEER
No. 11425
TRINITY D. SMITH

08-15-2024

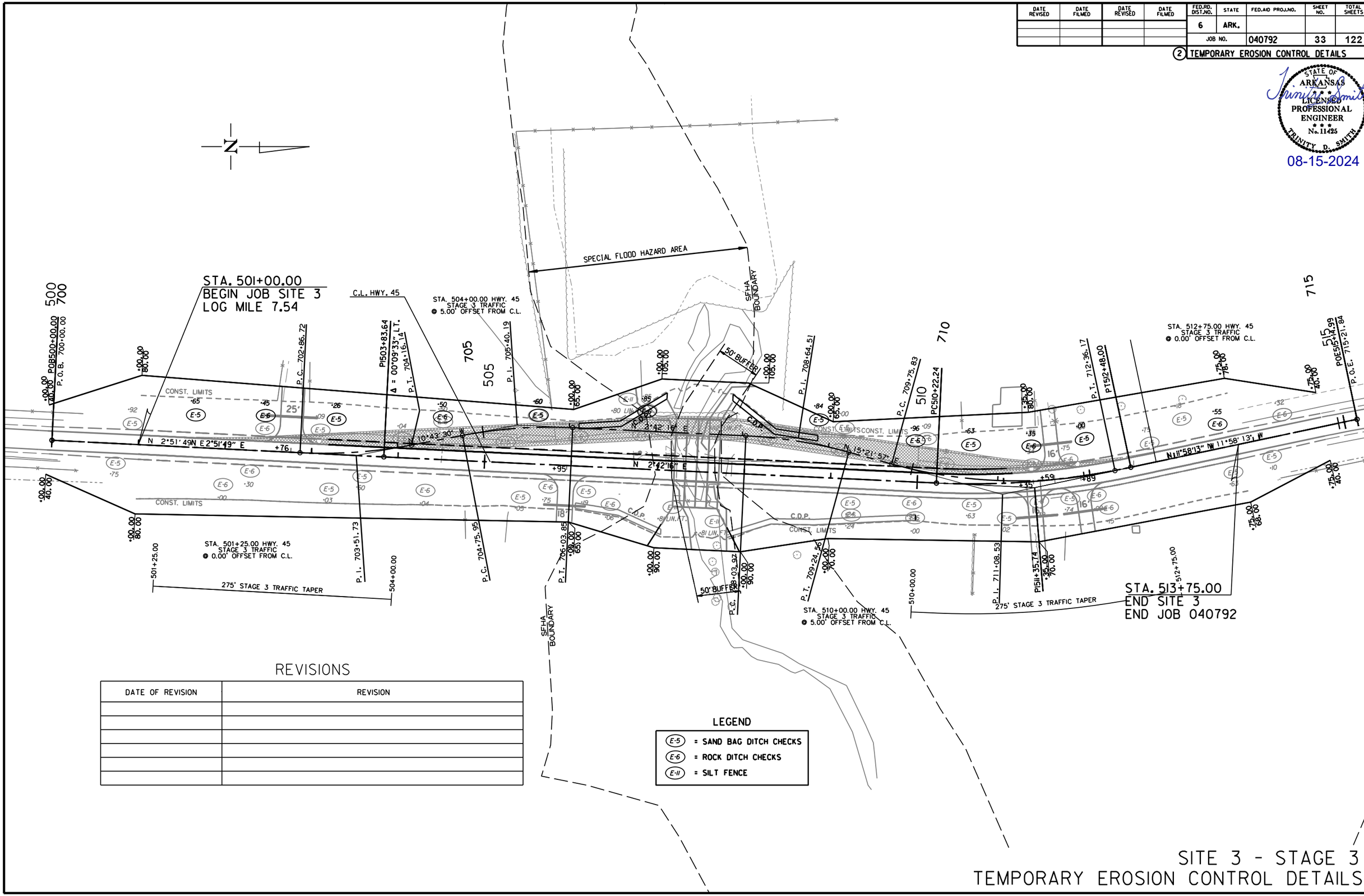

REVISIONS

DATE OF REVISION	REVISION

LEGEND

- (E-5) = SAND BAG DITCH CHECKS
- (E-6) = ROCK DITCH CHECKS
- (E-11) = SILT FENCE

SITE 3 - STAGE 3
TEMPORARY EROSION CONTROL DETAILS

RD38049 8/7/2024
R040792.DGN

DATE REVISED	DATE FILMED	DATE REVISED	DATE FILMED	FED.RD. DIST.NO.	STATE	FED.AID PROJ.NO.	SHEET NO.	TOTAL SHEETS
				6	ARK.			
				JOB NO.		040792	34	122

(2) MAINTENANCE OF TRAFFIC DETAILS

STATE OF ARKANSAS
LICENSED PROFESSIONAL ENGINEER
No. 11425
TRINITY D. SMITH
08-15-2024

STA. 314+96 LT. - HWY. 252

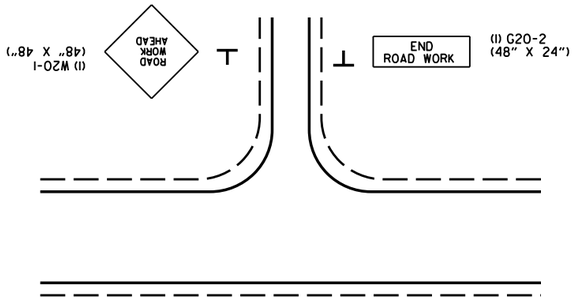

ADVANCE WARNING - SIDE ROADS
(ALL ROADS)

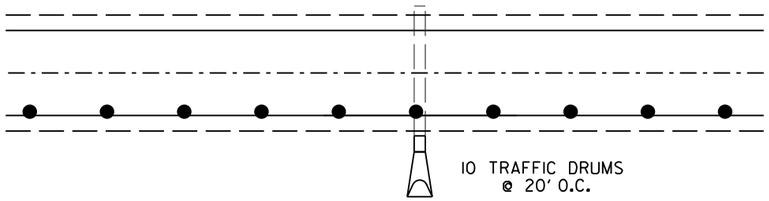

TRAFFIC DRUMS AND SIGNS ON EXISTING SHOULDER
FOR EXTENDING/CONSTRUCTING PIPE CULVERTS LT. AND RT.
SITE ISTAGE 2 - STA. 101+67 RT.
SITE ISTAGE 3 - STA. 101+67 LT.

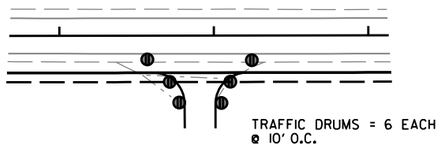

DRIVEWAY/TRAFFIC DRUM DETAIL

RIGHT SHOULDER CLOSED	(8) W21-5a (36" x 36")	ALL STAGES IF AND WHERE DIRECTED BY THE ENGINEER
DO NOT PASS	(8) R4-1 (24" X 30")	ALL STAGES SPACES AT ¼ MILE INTERVALS
BUMP	(6) W8-1 (30" X 30")	IF AND WHERE DIRECTED BY THE ENGINEER

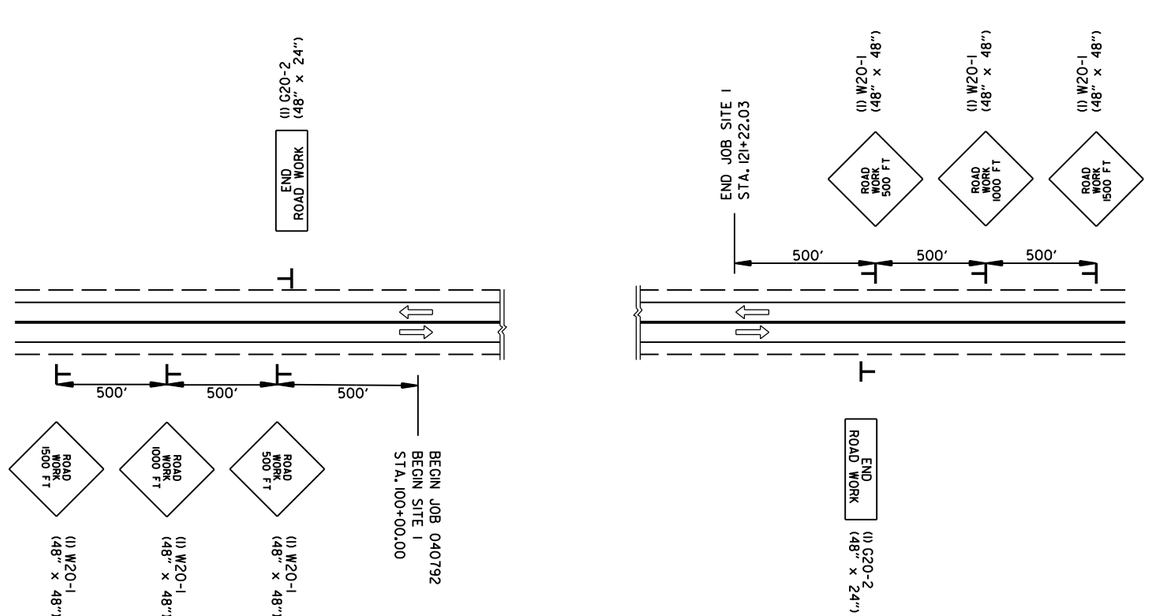

ADVANCE WARNING (ALL STAGES)
SITE 1

RD38049 8/7/2024
R040792.DGN

ADVANCE WARNING
MAINTENANCE OF TRAFFIC DETAILS

DATE REVISED	DATE FILMED	DATE REVISED	DATE FILMED

FED.RD. DIST.NO.	STATE	FED.AID PROJ.NO.	SHEET NO.	TOTAL SHEETS
6	ARK.			
JOB NO.		040792	35	122

(2) MAINTENANCE OF TRAFFIC DETAILS

STATE OF ARKANSAS
LICENSED PROFESSIONAL ENGINEER
No. 11425
TRINITY D. SMITH
08-15-2024

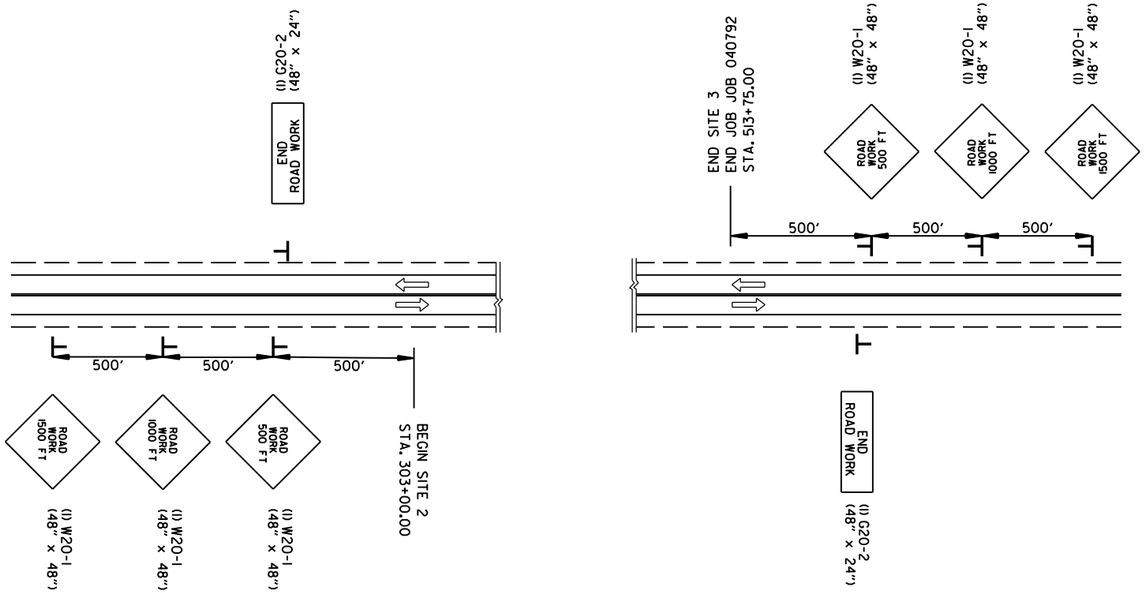

ADVANCE WARNING (ALL STAGES)
SITES 2 & 3

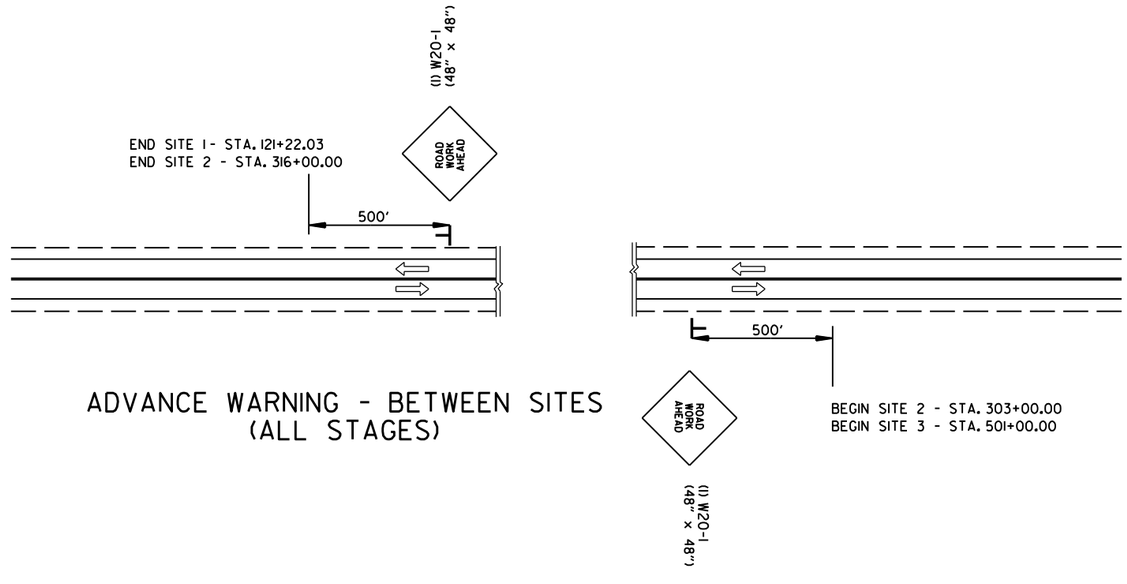

ADVANCE WARNING - BETWEEN SITES
(ALL STAGES)

RD38049 8/7/2024
R040792.DGN

ADVANCE WARNING
MAINTENANCE OF TRAFFIC DETAILS

DATE REVISED	DATE FILMED	DATE REVISED	DATE FILMED

FED.RD. DIST.NO.	STATE	FED.AID PROJ.NO.	SHEET NO.	TOTAL SHEETS
6	ARK.			
JOB NO.		040792	36	122

(2) MAINTENANCE OF TRAFFIC DETAILS

STATE OF ARKANSAS
LICENSED PROFESSIONAL ENGINEER
No. 11425
TRINITY D. SMITH
08-15-2024

STAGE 1 CONSTRUCTION SEQUENCE:

INSTALL ADVANCE WARNING SIGNS AND END ROAD WORK SIGNS AT THE BEGINNING AND END OF JOB AND BETWEEN SITES AS SHOWN ON THE ADVANCE WARNING DETAILS.

SEE CROSS SECTIONS FOR DETAILS ON STAGE CONSTRUCTION, STAGE TRAFFIC, AND TEMPORARY SLOPES.

SITE 1:

MAINTAIN TRAFFIC ON EXISTING LANES.
USE TRAFFIC DRUMS SPACED 55' O.C.
USE TRAFFIC DRUMS TO DELINEATE DRIVEWAYS.
FURNISH AND INSTALL TEMP. PCC BARRIER AS SHOWN ON THE STAGE 1 MOT DETAILS.

APPLY LEVELING COURSE TO EXISTING LANES IF AND WHERE DIRECTED BY THE ENGINEER.

NOTCH AND WIDEN ON LEFT FROM STA. 100+00-103+95
CONSTRUCT NEW LOCATION HWY. 45 LT. FROM STA. 103+95-112+63
CONSTRUCT TEMP. SLOPES HWY. 45 RT. FROM STA. 103+95-118+00
CONSTRUCT TEMP. WIDENING ON LT. FROM STA. 111+36.50-120+00.00

CONSTRUCT BRIDGE STRUCTURE FROM STA. 109+30.97-111+19.03.

CONSTRUCT LT. OF CROSS DRAIN AT STA. 101+67

SITE 2:

MAINTAIN TRAFFIC ON EXISTING LANES.
USE TRAFFIC DRUMS SPACED 55' O.C.
USE TRAFFIC DRUMS TO DELINEATE DRIVEWAYS.

APPLY LEVELING COURSE TO EXISTING LANES IF AND WHERE DIRECTED BY THE ENGINEER.

CONSTRUCT DETOUR AND TEMPORARY BRIDGE ON LEFT.
CONSTRUCT TEMP. DRIVE AT 314+96 LT. AND INSTALL TEMP. SIDE DRAIN.

SITE 3:

MAINTAIN TRAFFIC ON EXISTING LANES.
USE TRAFFIC DRUMS SPACED 55' O.C.
USE TRAFFIC DRUMS TO DELINEATE DRIVEWAYS.

APPLY LEVELING COURSE TO EXISTING LANES IF AND WHERE DIRECTED BY THE ENGINEER.

NOTCH AND WIDEN ON LEFT FROM STA. 501+00-504+00.
AND FROM STA. 510+00 TO STA. 513+75.
CONSTRUCT DETOUR LT. OF HWY. 45 AND CONSTRUCT 35' LT. OF R.C. BOX CULVERT UNDER DETOUR.

STAGE 2 CONSTRUCTION SEQUENCE:

MAINTAIN ADVANCE WARNING SIGNS AND END ROAD WORK SIGNS AT THE BEGINNING AND END OF JOB AND BETWEEN SITES AS SHOWN ON THE ADVANCE WARNING DETAILS.

APPLY LEVELING COURSE TO EXISTING LANES IF AND WHERE DIRECTED BY THE ENGINEER.

APPLY CONSTRUCTION PAVEMENT MARKINGS AS SHOWN IN THE STAGE 2 MAINTENANCE OF TRAFFIC DETAILS.

SEE CROSS SECTIONS FOR DETAILS ON STAGE CONSTRUCTION, STAGE TRAFFIC, AND TEMPORARY SLOPES.

SITE 1:

SHIFT TRAFFIC TO STAGE 2 TRAFFIC CENTERLINE AS SHOWN IN THE STAGE 2 MAINTENANCE OF TRAFFIC DETAILS.

USE TRAFFIC DRUMS SPACED 55' O.C.
USE TRAFFIC DRUMS TO DELINEATE DRIVEWAYS.
RELOCATE, FURNISH, AND INSTALL TEMP. PCC BARRIER.
INSTALL SIGNS AS SHOWN IN THE STAGE 2 MAINTENANCE OF TRAFFIC DETAILS.

NOTCH AND WIDEN ON RT. FROM STA. 100+00-103+95
AND FROM 118+00-121+22.03
CONSTRUCT NEW LOCATION HWY. 45 RT. FROM STA. 103+95-118+00.
CONSTRUCT RT. OF CROSS DRAIN AT STA. 101+67

SITE 2:

SHIFT TRAFFIC TO DETOUR AS SHOWN IN THE STAGE 2 MAINTENANCE OF TRAFFIC DETAILS.

USE TRAFFIC DRUMS SPACED 55' O.C.
USE TRAFFIC DRUMS TO DELINEATE DRIVEWAYS.
INSTALL SIGNS AS SHOWN IN THE STAGE 2 MAINTENANCE OF TRAFFIC DETAILS.

NOTCH AND WIDEN ON RIGHT FROM STA. 303+00-STA. 316+00
CONSTRUCT BRIDGE STRUCTURE FROM STA. 309+67.50 TO STA. 311+43.50

SITE 3:

SHIFT TRAFFIC TO DETOUR AS SHOWN IN THE STAGE 2 MAINTENANCE OF TRAFFIC DETAILS.

USE TRAFFIC DRUMS SPACED 55' O.C.
USE TRAFFIC DRUMS TO DELINEATE DRIVEWAYS.
FURNISH AND INSTALL TEMP. PCC BARRIER LT. & RT. OF DETOUR.
INSTALL SIGNS AS SHOWN IN THE STAGE 2 MAINTENANCE OF TRAFFIC DETAILS.

CONSTRUCT TEMP. DRIVE AT STA. 505+95 RT. AND INSTALL TEMP. PIPE
CONSTRUCT RT. OF HWY. 45 FROM STA. 501+00-513+75.
CONSTRUCT 68' RT. OF R.C. BOX CULVERT.

STAGE 3 CONSTRUCTION SEQUENCE:

SEE CROSS SECTIONS FOR DETAILS ON STAGE CONSTRUCTION, STAGE TRAFFIC, AND TEMPORARY SLOPES.

SITE 1:

APPLY CONSTRUCTION PAVEMENT MARKINGS AS SHOWN IN THE STAGE 3 MAINTENANCE OF TRAFFIC DETAILS.

SHIFT TRAFFIC TO STAGE 3 CENTERLINE AS SHOWN IN THE STAGE 3 MAINTENANCE OF TRAFFIC DETAILS.

USE TRAFFIC DRUMS SPACED 55' O.C.

REMOVE TEMP. WIDENING ON RT. FROM STA. 111+36.50-120+00.00
CONSTRUCT LT. OF HWY. 45 FROM STA. 112+63-121+22.03.

APPLY FINAL 2" LIFT OF ACHM SURFACE COURSE AND PLACE PERMANENT PAVEMENT MARKINGS AS SHOWN IN THE PERMANENT PAVEMENT MARKINGS DETAILS.

REMOVE EXISTING BRIDGE STRUCTURE.

SITE 2:

APPLY CONSTRUCTION PAVEMENT MARKINGS AS SHOWN IN THE STAGE 3 MAINTENANCE OF TRAFFIC DETAILS.

SHIFT TRAFFIC TO CENTERLINE AS SHOWN IN THE STAGE 3 MAINTENANCE OF TRAFFIC DETAILS.

USE TRAFFIC DRUMS SPACED 55' O.C.
USE TRAFFIC DRUMS TO DELINEATE DRIVEWAYS.

REMOVE DETOUR, TEMPORARY BRIDGE, AND TEMPORARY PIPES.

NOTCH AND WIDEN ON LEFT FROM STA. 303+00-STA. 316+00.
CONSTRUCT HWY. 255 TURNOUT ON LT. @ STA. 314+96.
INSTALL GUARDRAIL ON LT.

SHIFT TRAFFIC TO CONSTRUCTION CENTERLINE.
APPLY FINAL 2" LIFT OF ACHM AND PLACE PERMANENT PAVEMENT MARKINGS AS SHOWN IN THE PERMANENT PAVEMENT MARKINGS DETAILS.

SITE 3:

APPLY CONSTRUCTION PAVEMENT MARKINGS AS SHOWN IN THE STAGE 3 MAINTENANCE OF TRAFFIC DETAILS.

APPLY CONSTRUCTION PAVEMENT MARKINGS AS SHOWN IN THE STAGE 3 MAINTENANCE OF TRAFFIC DETAILS.

SHIFT TRAFFIC TO CENTERLINE AS SHOWN IN THE STAGE 3 MAINTENANCE OF TRAFFIC DETAILS.

USE TRAFFIC DRUMS SPACED 55' O.C.
RELOCATE TEMP. PCC BARRIER TO LT. OF HWY. 45.

REMOVE DETOUR, REMOVE TEMP. DRIVE, AND CONSTRUCT LT. OF HWY. 45 FROM STA. 504+00-510+00.

SHIFT TRAFFIC TO CONSTRUCTION CENTERLINE.
APPLY FINAL 2" LIFT OF ACHM AND PLACE PERMANENT PAVEMENT MARKINGS AS SHOWN IN THE PERMANENT PAVEMENT MARKINGS DETAILS.

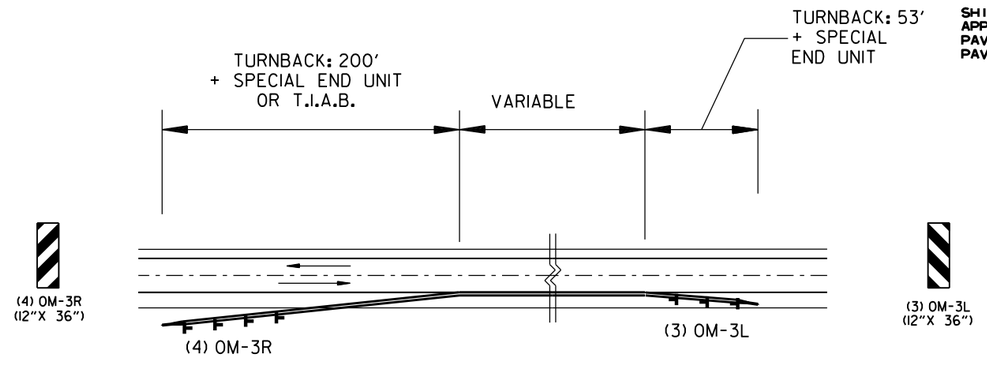

REFER ALSO TO STANDARD DRAWING TC-5 FOR DETAILS OF PLACEMENT OF PCCB TURNBACKS.

NOTE: OM-3L & OM-3R SIGNS SHALL BE EQUALLY SPACED ALONG PCCB TURNBACK.

DETAIL OF OBJECT MARKERS
AT PRECAST CONCRETE BARRIER TURNBACKS

RD38049 8/7/2024
R040792.DGN

MAINTENANCE OF TRAFFIC DETAILS

DATE REVISED	DATE FILMED	DATE REVISED	DATE FILMED	FED.RD. DIST.NO.	STATE	FED.AID PROJ.NO.	SHEET NO.	TOTAL SHEETS
				6	ARK.			
				JOB NO.		040792	37	122

2 MAINTENANCE OF TRAFFIC DETAILS

STATE OF ARKANSAS
LICENSED PROFESSIONAL ENGINEER
No. 11425
TRINITY D. SMITH
Trinity D. Smith
08-15-2024

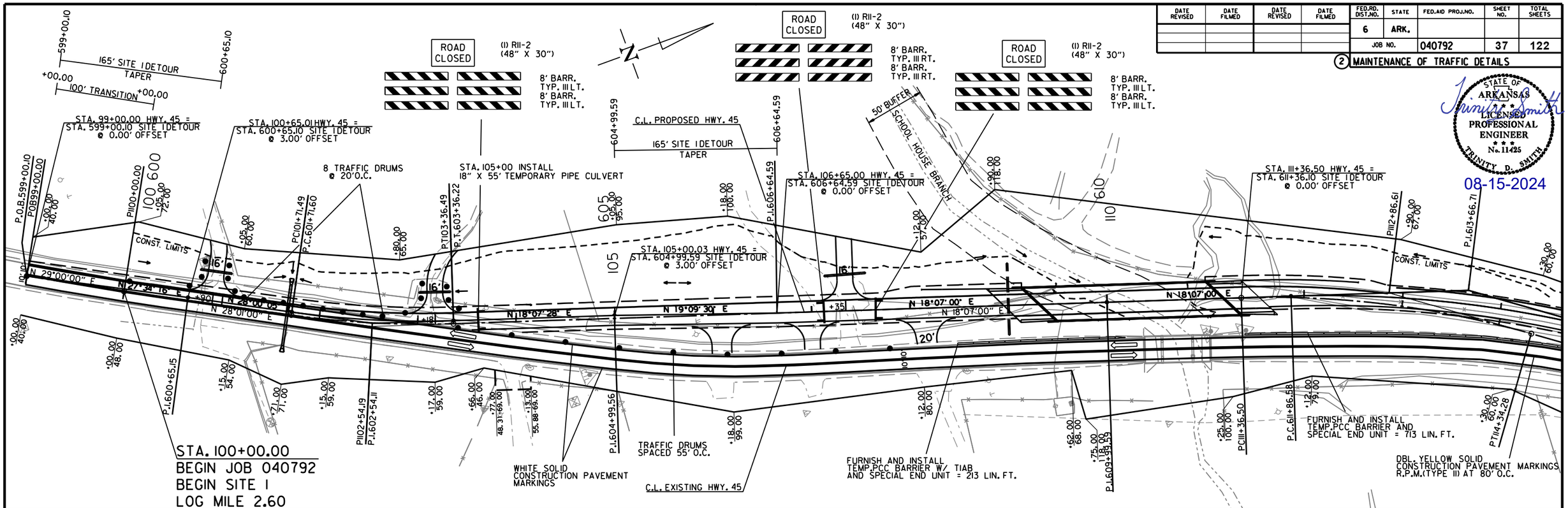

SITE 1 - STAGE 1
MAINTENANCE OF TRAFFIC DETAILS

RD38049 8/7/2024
R040792.DGN

DATE REVISED	DATE FILMED	DATE REVISED	DATE FILMED	FED.RD. DIST.NO.	STATE	FED.AID PROJ.NO.	SHEET NO.	TOTAL SHEETS
				6	ARK.			
				JOB NO.		040792	38	122

(2) MAINTENANCE OF TRAFFIC DETAILS

STATE OF ARKANSAS
LICENSED PROFESSIONAL ENGINEER
No. 11425
TRINITY D. SMITH
08-15-2024

ROAD CLOSED
(1) R11-2 (48" X 30")
8' BARR. TYP. III LT.
8' BARR. TYP. III LT.

+00.00 100' TRANSITION +00.00

STA. 397+43.86=
BEGIN SITE 2 DETOUR CONST.

POB396+17.96
POB300+00.00
PC397+43.86
300
400
305
PT403+99.43
PI405+10.73
405
C.L. SITE 2 DETOUR
JOHNSON BRANCH
50' BUFFER
310
410
PI410+34.04
TRAFFIC DRUMS SPACED 55' O.C.
DETOUR CONST. LIMITS
20'
N 3°11'04" E
N 3°22'16" W
N 2°57'55" E
N 9°15'07" E
N 2°49'54" E
PI300+00.00
HWY. 45 DETOUR STA. 397+43.86=
HWY. 45 STA. 300+05.17
BEGIN HWY. 45 DETOUR
PI400+72.00
STA. 303+00.00
BEGIN SITE 2
LOG MILE 6.68
PC404+63.74
PI307+61.66
Δ=0°21'10" LT.
PT405+57.62
WHITE SOLID CONSTRUCTION PAVEMENT MARKINGS
C.L. HWY. 45
DBL. YELLOW SOLID CONSTRUCTION PAVEMENT MARKINGS R.P.M.(TYPE II) AT 80' O.C.
PC409+87.42
PT410+80.56

ROAD CLOSED
(1) R11-2 (48" X 30")
8' BARR. TYP. III RT.
8' BARR. TYP. III RT.

ROAD CLOSED
(1) R11-2 (48" X 30")
8' BARR. TYP. III LT.
8' BARR. TYP. III LT.

ROAD CLOSED
(1) R11-2 (48" X 30")
8' BARR. TYP. III RT.
8' BARR. TYP. III RT.

C.L. SITE 2 DETOUR
TRAFFIC DRUMS 6 EACH LOCATION
STA 314+96 INSTALL DBL. 59" X 36" TEMP. ARCH PIPES LT. SIDE DRAIN AND CONSTRUCT TEMP. APPROACH = 85 CU. YDS.
DBL. YELLOW SOLID CONSTRUCTION PAVEMENT MARKINGS R.P.M.(TYPE II) AT 80' O.C.
+00.00 100' TRANSITION +00.00
PC412+59.82
315
20'
415
320
PI318+55.98
PT416+80.08
POE320+30.11
POE417+72.77
N 9°15'07" E
N 2°49'54" E
N 2°56'53" E
DETOUR CONST. LIMITS
STA. 416+80.08=
BEGIN SITE 2 DETOUR CONST.
HWY. 45 DETOUR STA. 416+80.08=
HWY. 45 STA. 319+37.42
END HWY. 45 DETOUR
PI414+70.16
PI320+30.11
WHITE SOLID CONSTRUCTION PAVEMENT MARKINGS
C.L. HWY. 45
STA. 316+00.00
END SITE 2

SITE 2 - STAGE I
MAINTENANCE OF TRAFFIC DETAILS

RD38049 8/7/2024
R040792.DGN

DATE REVISED	DATE FILMED	DATE REVISED	DATE FILMED

FED.RD. DIST.NO.	STATE	FED.AID PROJ.NO.	SHEET NO.	TOTAL SHEETS
6	ARK.			
JOB NO.		040792	39	122

(2) MAINTENANCE OF TRAFFIC DETAILS

STATE OF ARKANSAS
LICENSED PROFESSIONAL ENGINEER
No. 11425
TRINITY D. SMITH

08-15-2024

N

ROAD CLOSED

(1) RII-2 (48" X 30")

8' BARR. TYP. III LT.
8' BARR. TYP. III LT.

+00.00 100' TRANSITION +00.00

STA. 702+86.72
BEGIN SITE 3 DETOUR

STA. 702+86.72 C.L. SITE 3 DETOUR =
STA. 502+86.72 C.L. HWY. 45 SITE 3

TRAFFIC DRUMS
6 EACH LOCATION

C.L. SITE 3 DETOUR

ROAD CLOSED

(1) RII-2 (48" X 30")

8' BARR. TYP. III RT.
8' BARR. TYP. III RT.

TRAFFIC DRUMS
SPACED 55' O.C.

STA. 712+36.17
END SITE 3 DETOUR

STA. 712+36.17 C.L. SITE 3 DETOUR =
STA. 512+29.33 C.L. HWY. 45 SITE 3

+00.00 100' TRANSITION +00.00

CONST. LIMITS

DETOUR CONST. LIMITS

WHITE SOLID CONSTRUCTION PAVEMENT MARKINGS

C.L. HWY. 45

DBL. YELLOW SOLID CONSTRUCTION PAVEMENT MARKINGS R.P.M.(TYPE II) AT 80' O.C.

STA. 501+00.00
BEGIN SITE 3
LOG MILE 7.54

STA. 513+75.00
END SITE 3
END JOB 040792

be42315 8/9/2024
R040792.DGN

SITE 3 - STAGE I
MAINTENANCE OF TRAFFIC DETAILS

DATE REVISED	DATE FILMED	DATE REVISED	DATE FILMED	FED.RD. DIST.NO.	STATE	FED.AID PROJ.NO.	SHEET NO.	TOTAL SHEETS
				6	ARK.			
				JOB NO.		040792	40	122

(2) MAINTENANCE OF TRAFFIC DETAILS

STATE OF ARKANSAS
LICENSED PROFESSIONAL ENGINEER
No. 11425
TRINITY D. SMITH
08-15-2024

STA. 99+00.00 HWY. 45 = STA. 599+00.10 STAGE 2 TRAFFIC @ 0.00' OFFSET
599+00.10
165' STAGE 2 TRAFFIC TAPER
600+65.10
+00.00
100' TRANSITION +00.00
STA. 100+65.01 HWY. 45 = STA. 600+65.10 STAGE 2 TRAFFIC @ 3.00' OFFSET
WHITE SOLID CONSTRUCTION PAVEMENT MARKINGS
RELOCATE TEMP.PCC BARRIER = 160 LIN. FT.
RELOCATE TIAB = 1EACH
INSTALL TIAB = 1EACH
C.L. SITE 1DETOUR
C.L. PROPOSED HWY. 45
604+99.59
165' STAGE 2 TRAFFIC TAPER
606+64.59
RELOCATE TEMP.PCC BARRIER = 40 LIN. FT.
INSTALL TIAB = 2 EACH
STA. 106+65.00 HWY. 45 = STA. 606+64.59 STAGE 2 TRAFFIC @ 0.00' OFFSET
RELOCATE TEMP.PCC BARRIER = 60 LIN. FT.
INSTALL TIAB = 2 EACH
50' BUFFER
SCHOOL HOUSE BRANCH
DBL. YELLOW SOLID CONSTRUCTION PAVEMENT MARKINGS R.P.M.(TYPE II) AT 80' O.C.
STA. 105+00.03 HWY. 45 = STA. 604+99.59 STAGE 2 TRAFFIC @ 3.00' OFFSET
STA. 111+36.50 HWY. 45 = STA. 611+36.10 STAGE 2 TRAFFIC @ 0.00' OFFSET
C.D.P.
CONST. LIMITS
TRAFFIC DRUMS SPACED 55' O.C.
TRAFFIC DRUMS SPACED 20' O.C.
STA. 100+00.00
BEGIN JOB 040792
BEGIN SITE 1
LOG MILE 2.60
ROAD CLOSED
(1) RII-2 (48" X 30")
8' BARR. TYP. III RT.
8' BARR. TYP. III RT.
8' BARR. TYP. III LT.
8' BARR. TYP. III LT.
8' BARR. TYP. III RT.
8' BARR. TYP. III RT.
RELOCATE TEMP.PCC BARRIER AND SPECIAL END UNIT = 93 LIN. FT.
INSTALL TIAB = 1EACH
RELOCATE TEMP.PCC BARRIER AND SPECIAL END UNIT = 573 LIN. FT.
FURNISH & INSTALL TEMP. PCC BARRIER = 80 LIN. FT.
INSTALL TIAB = 1EACH

C.L. SITE 1DETOUR
STA. 115+40.93 HWY. 45 = STA. 615+43.91 STAGE 2 TRAFFIC @ 24.70' OFFSET
617+04.18
C.L. PROPOSED HWY. 45
510' STAGE 2 TRAFFIC TAPER
STA. 117+00.00 HWY. 45 = STA. 617+04.18 STAGE 2 TRAFFIC @ 24.70' OFFSET
+22.03
100' TRANSITION +22.03
MOT CONST. LIMITS
CONST. LIMITS
C.O.P.
WHITE SOLID CONSTRUCTION PAVEMENT MARKINGS
TRAFFIC DRUMS SPACED 55' O.C.
DBL. YELLOW SOLID CONSTRUCTION PAVEMENT MARKINGS R.P.M.(TYPE III AT 80' O.C.
STA. 122+10.00 HWY. 45 = STA. 622+14.18 STAGE 2 TRAFFIC @ 0.00' OFFSET
STA. 121+22.03
END SITE 1

SITE 1- STAGE 2
MAINTENANCE OF TRAFFIC DETAILS

RD38049 8/7/2024
R040792.DGN

DATE REVISED	DATE FILMED	DATE REVISED	DATE FILMED	FED.RD. DIST.NO.	STATE	FED.AID PROJ.NO.	SHEET NO.	TOTAL SHEETS
				6	ARK.			
				JOB NO.		040792	41	122

(2) MAINTENANCE OF TRAFFIC DETAILS

STATE OF ARKANSAS
LICENSED PROFESSIONAL ENGINEER
No. 11425
TRINITY D. SMITH
08-15-2024

STA. 309+00 INSTALL
24" X 85' TEMP. PIPE CULVERT
STAGE 2 CONSTRUCTION

(8) W1-8
(18" X 24")

STA. 397+43.86=
BEGIN SITE 2 DETOUR CONST.

+00.00 100' TRANSITION +00.00

TRAFFIC DRUMS
SPACED 55' O.C.

C.L. SITE 2 DETOUR

WHITE SOLID
CONSTRUCTION PAVEMENT
MARKINGS

ROAD CLOSED

(1) R11-2
(48" X 30")

(1) 8' BARR.
TYP. III LT.
(1) 8' BARR.
TYP. III LT.

50' BUFFER

POB396+17.96
POB300+00.00
PC397+43.86
PI300+00.00
PI400+72.00
PT403+99.43
PI405+10.73
PC404+63.74
PI307+61.66
Δ=0°21'10" LT.
PT405+57.62
PI410+34.04
PC409+87.42
PT410+80.56
PC412+59.82
PI318+55.98
PT416+80.08
POE320+30.11
POE417+72.77
PI414+70.16
PI320+30.11

N 3°11'04" E
N 3°22'16" W
N 9°15'07" E
N 2°49'54" E
N 2°56'53" E

DETOUR CONST. LIMITS
CONST. LIMITS
C.L. HWY. 45

HWY. 45 DETOUR STA. 397+43.86=
HWY. 45 STA. 300+05.17
BEGIN HWY. 45 DETOUR

STA. 303+00.00
BEGIN SITE 2
LOG MILE 6.68

TRAFFIC DRUMS
6 EACH LOCATION

DBL. YELLOW SOLID
CONSTRUCTION PAVEMENT MARKINGS
R.P.M.(TYPE II) AT 80' O.C.

(8) W1-8
(18" X 24")

STA. 416+80.08=
BEGIN SITE 2 DETOUR CONST.

STA. 316+00.00
END SITE 2

HWY. 45 DETOUR STA. 416+80.08=
HWY. 45 STA. 319+37.42
END HWY. 45 DETOUR

RD38049 8/7/2024
R040792.DGN

SITE 2 - STAGE 2
MAINTENANCE OF TRAFFIC DETAILS

DATE REVISED	DATE FILMED	DATE REVISED	DATE FILMED

FED.RD. DIST.NO.	STATE	FED.AID PROJ.NO.	SHEET NO.	TOTAL SHEETS
6	ARK.			
JOB NO.		040792	42	122

(2) MAINTENANCE OF TRAFFIC DETAILS

STATE OF ARKANSAS
LICENSED PROFESSIONAL ENGINEER
No. 11425
TRINITY D. SMITH

08-15-2024

N

+00.00 100' TRANSITION +00.00

STA. 702+86.72
BEGIN SITE 3 DETOUR

STA. 702+86.72 C.L. SITE 3 DETOUR =
STA. 502+86.72 C.L. HWY. 45 SITE 3

WHITE SOLID CONSTRUCTION PAVEMENT MARKINGS

FURNISH AND INSTALL TEMP.PCC BARRIER AND SPECIAL END UNIT LT. OF SITE 3 DETOUR = 653 LIN. FT.
INSTALL TIAB = 1EACH

STA. 505+95 INSTALL 18" X 34' TEMP. PIPE AND CONSTRUCT TEMP. DRIVE = 145 CU. YD.

(8) WI-8 (18" X 24")

(8) WI-8 (18" X 24")

C.L. SITE 3 DETOUR

DBL. YELLOW SOLID CONSTRUCTION PAVEMENT MARKINGS R.P.M.(TYPE II) AT 80' O.C.

(1) WI-4AR (48" X 48")

(1) WI3-1 (24" X 24")

STA. 712+36.17
END SITE 3 DETOUR

STA. 712+36.17 C.L. SITE 3 DETOUR =
STA. 512+29.33 C.L. HWY. 45 SITE 3

+00.00 100' TRANSITION +00.00

CONST. LIMITS

DETOUR CONST. LIMITS

50' BUFFER

C.O.P.

TRAFFIC DRUMS SPACED 55' O.C.

TRAFFIC DRUMS 6 EACH LOCATION

STA. 501+00.00
BEGIN SITE 3
LOG MILE 7.54

STA. 513+75.00
END SITE 3
END JOB 040792

ROAD CLOSED

(1) RII-2 (48" X 30")

(1) WI-6 (48" X 24")

8' BARR. TYP. III RT.
8' BARR. TYP. III RT.

8' BARR. TYP. III LT.
8' BARR. TYP. III LT.

C.L. HWY. 45

FURNISH AND INSTALL TEMP.PCC BARRIER AND SPECIAL END UNIT RT. OF SITE 3 DETOUR = 373 LIN. FT.
INSTALL TIAB = 3 EACH

(1) WI3-1 (24" X 24")

(1) WI-4AL (48" X 48")

RD38049 8/7/2024
R040792.DGN

SITE 3 - STAGE 2
MAINTENANCE OF TRAFFIC DETAILS

DATE REVISED	DATE FILMED	DATE REVISED	DATE FILMED

FED.RD. DIST.NO.	STATE	FED.AID PROJ.NO.	SHEET NO.	TOTAL SHEETS
6	ARK.			
JOB NO.		040792	43	122

(2) MAINTENANCE OF TRAFFIC DETAILS

STATE OF ARKANSAS
LICENSED PROFESSIONAL ENGINEER
No. 11425
TRINITY D. SMITH
08-15-2024

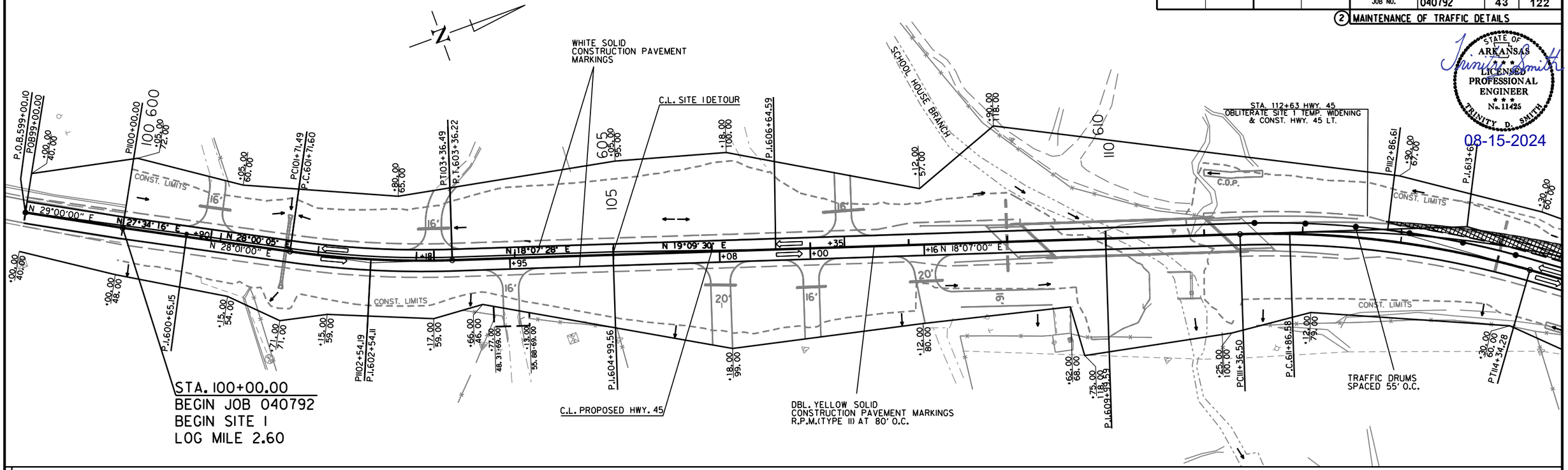

SITE 1 - STAGE 3
MAINTENANCE OF TRAFFIC DETAILS

RD38049 8/7/2024
R040792.DGN

DATE REVISED	DATE FILMED	DATE REVISED	DATE FILMED	FED.RD. DIST.NO.	STATE	FED.AID PROJ.NO.	SHEET NO.	TOTAL SHEETS
				6	ARK.			
				JOB NO.		040792	44	122

(2) MAINTENANCE OF TRAFFIC DETAILS

STATE OF ARKANSAS
LICENSED PROFESSIONAL ENGINEER
No. 11425
TRINITY D. SMITH
08-15-2024

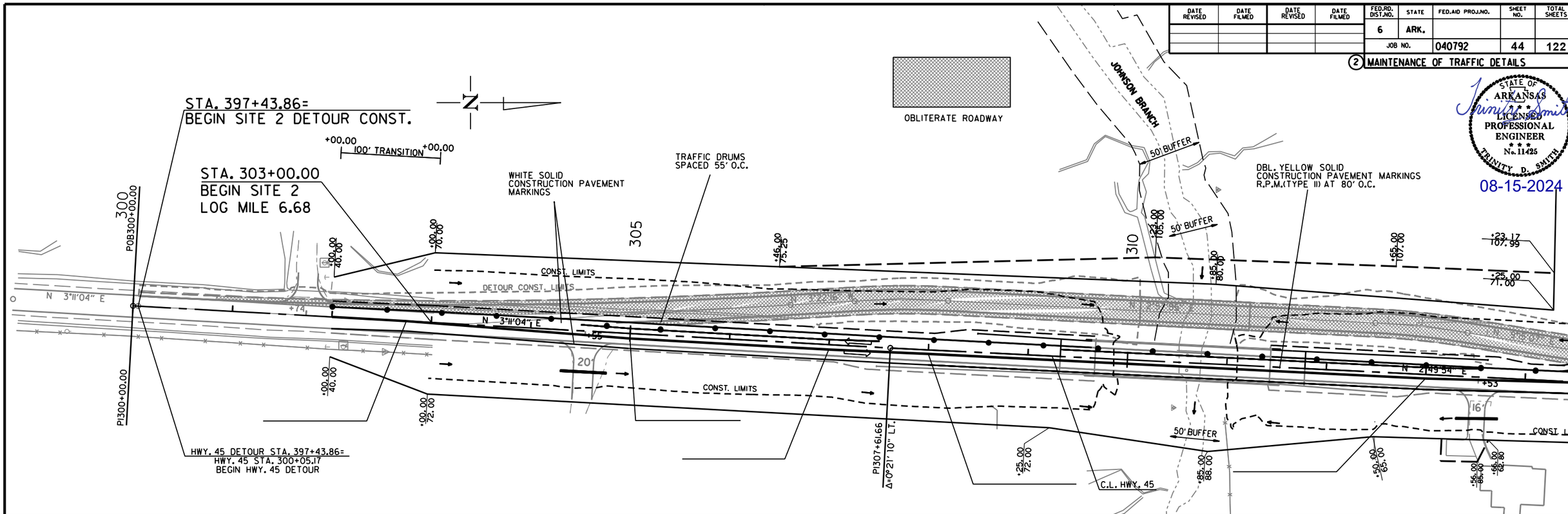

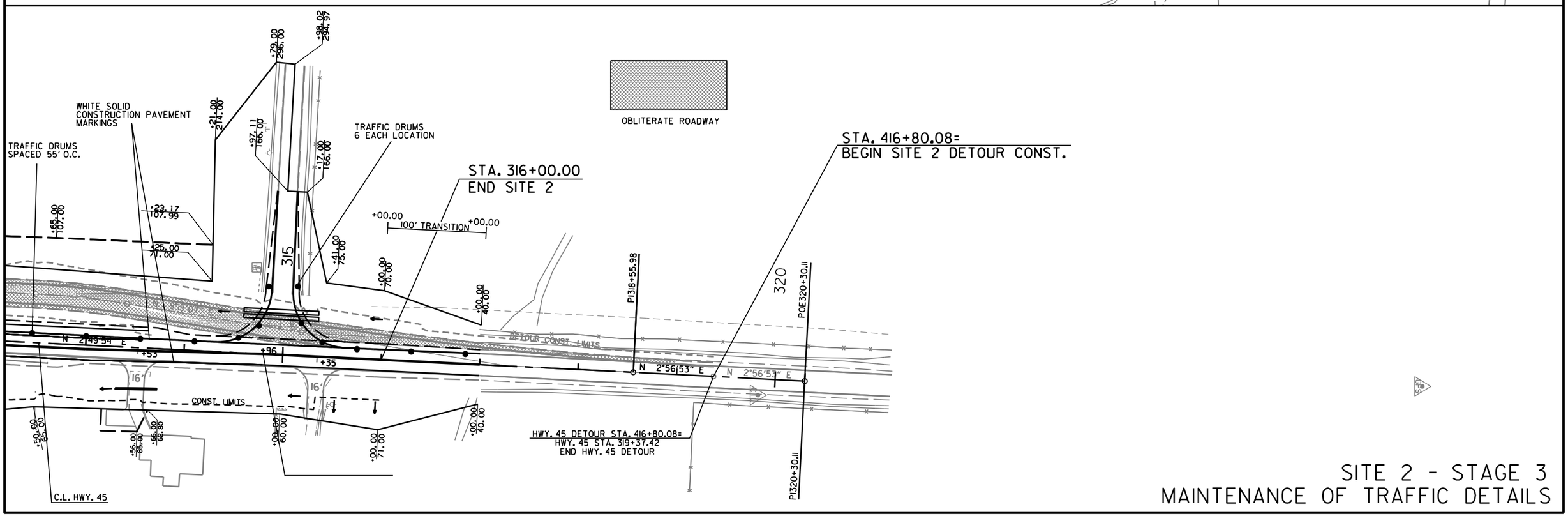

SITE 2 - STAGE 3
MAINTENANCE OF TRAFFIC DETAILS

RD38049 8/7/2024
R040792.DGN

DATE REVISED	DATE FILMED	DATE REVISED	DATE FILMED

FED.RD. DIST.NO.	STATE	FED.AID PROJ.NO.	SHEET NO.	TOTAL SHEETS
6	ARK.			
JOB NO.		040792	45	122

(2) MAINTENANCE OF TRAFFIC DETAILS

STATE OF ARKANSAS
LICENSED PROFESSIONAL ENGINEER
No. 11425
TRINITY D. SMITH
08-15-2024

OBLITERATE ROADWAY

RELOCATE TEMP.PCC BARRIER AND SPECIAL END UNIT = 713 LIN. FT.
INSTALL TIAB = 1EACH

STA. 702+86.72
BEGIN SITE 3 DETOUR

STA. 702+86.72 C.L. SITE 3 DETOUR =
STA. 502+86.72 C.L. HWY. 45 SITE 3

STA. 712+36.17
END SITE 3 DETOUR

STA. 712+36.17 C.L. SITE 3 DETOUR =
STA. 512+29.33 C.L. HWY. 45 SITE 3

C.L. SITE 3 DETOUR

STA. 504+00.00 HWY. 45
STAGE 3 TRAFFIC
@ 5.00' OFFSET FROM C.L.

STA. 512+75.00 HWY. 45
STAGE 3 TRAFFIC
@ 0.00' OFFSET FROM C.L.

STA. 501+25.00 HWY. 45
STAGE 3 TRAFFIC
@ 0.00' OFFSET FROM C.L.

STA. 510+00.00 HWY. 45
STAGE 3 TRAFFIC
@ 5.00' OFFSET FROM C.L.

100' TRANSITION

50' BUFFER

CONST. LIMITS

C.O.P.

TRAFFIC DRUMS
SPACED 55' O.C.

275' STAGE 3 TRAFFIC TAPER

WHITE SOLID
CONSTRUCTION PAVEMENT
MARKINGS

C.L. HWY. 45

DBL. YELLOW SOLID
CONSTRUCTION PAVEMENT MARKINGS
R.P.M.(TYPE II) AT 80' O.C.

STA. 501+00.00
BEGIN SITE 3
LOG MILE 7.54

STA. 513+75.00
END SITE 3
END JOB 040792

RD38049 8/7/2024
R040792.DGN

SITE 3 - STAGE 3
MAINTENANCE OF TRAFFIC DETAILS

DATE REVISED	DATE FILMED	DATE REVISED	DATE FILMED

FED.RD. DIST.NO.	STATE	FED.AID PROJ.NO.	SHEET NO.	TOTAL SHEETS
6	ARK.			
JOB NO.		040792	46	122

(2) PERMANENT PAVEMENT MARKING DETAILS

STATE OF ARKANSAS
LICENSED PROFESSIONAL ENGINEER
No. 11425
TRINITY D. SMITH

08-15-2024

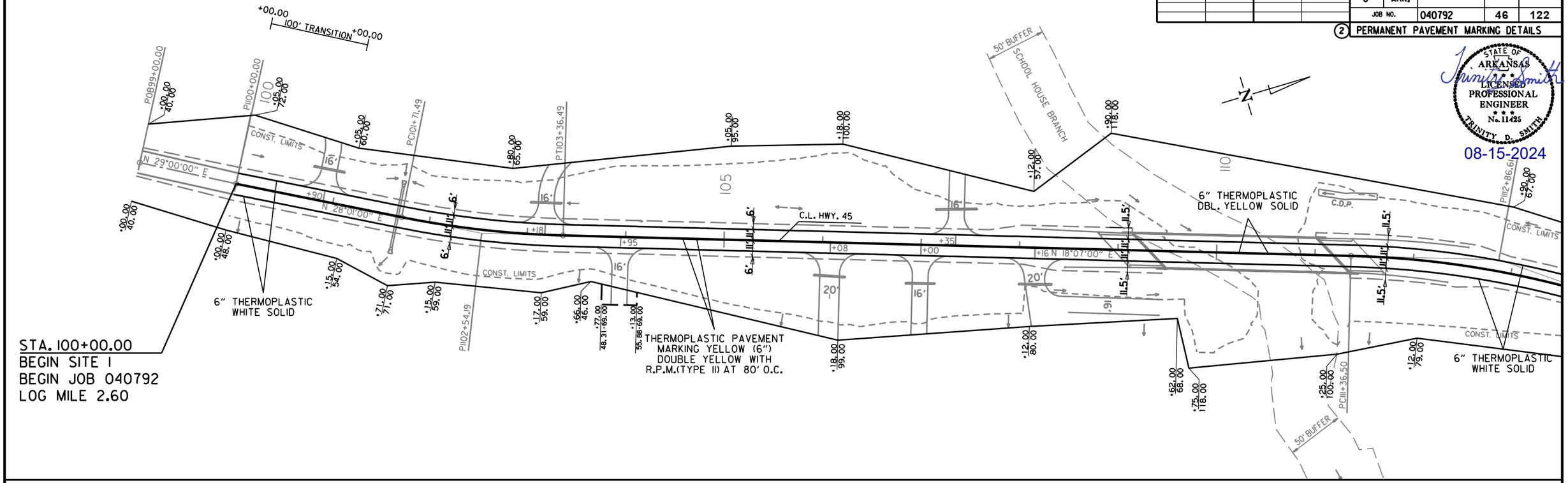

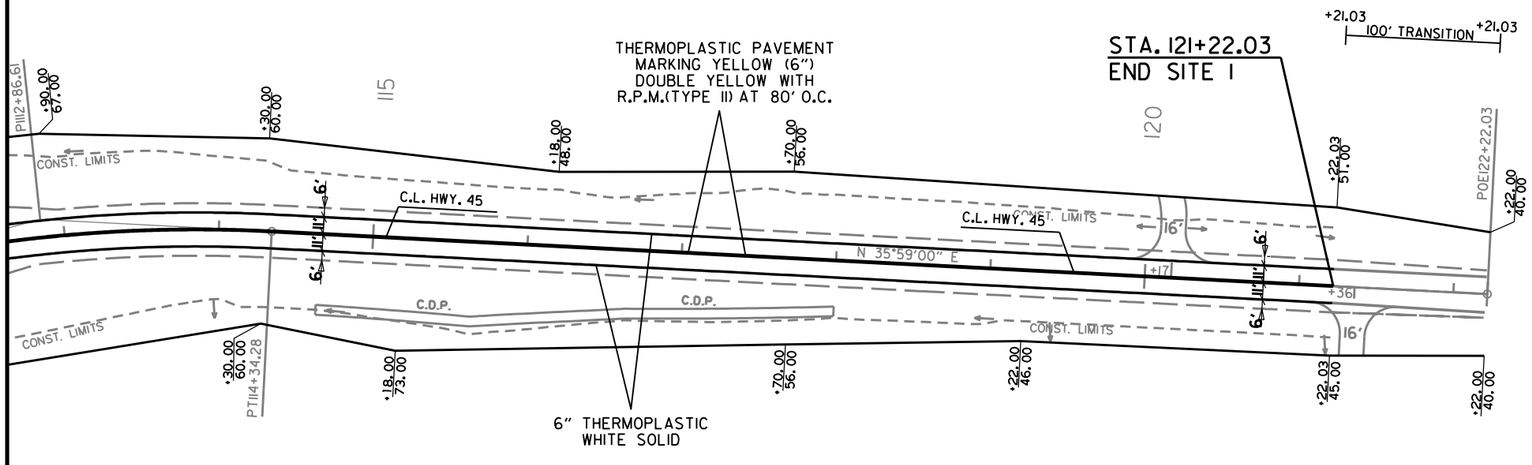

SITE 1
PERMANENT PAVEMENT PARKING DETAILS

BA42315 6/27/2024
R040792.DGN

DATE REVISED	DATE FILMED	DATE REVISED	DATE FILMED

FED.RD. DIST.NO.	STATE	FED.AID PROJ.NO.	SHEET NO.	TOTAL SHEETS
6	ARK.			
JOB NO.		040792	47	122

(2) PERMANENT PAVEMENT MARKING DETAILS

STATE OF ARKANSAS
LICENSED PROFESSIONAL ENGINEER
No. 11425
TRINITY D. SMITH

Trinity Smith
08-15-2024

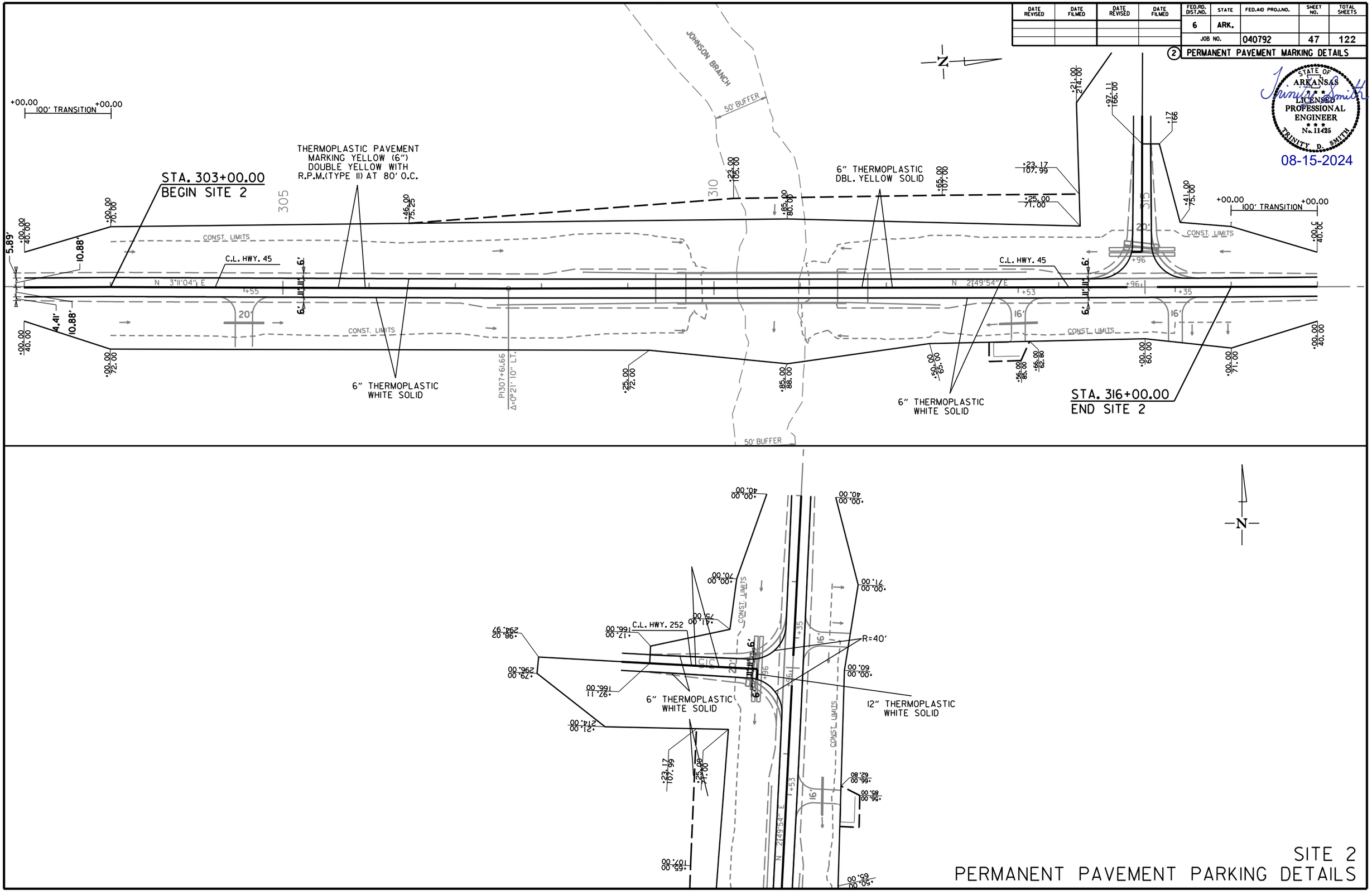

N

SITE 2
PERMANENT PAVEMENT PARKING DETAILS

BA42315 6/27/2024
R040792.DGN

DATE REVISED	DATE FILMED	DATE REVISED	DATE FILMED

FED.RD. DIST.NO.	STATE	FED.AID PROJ.NO.	SHEET NO.	TOTAL SHEETS
6	ARK.			
JOB NO.		040792	48	122

(2) PERMANENT PAVEMENT MARKING DETAILS

STATE OF ARKANSAS
LICENSED PROFESSIONAL ENGINEER
No. 11425
TRINITY D. SMITH

08-15-2024

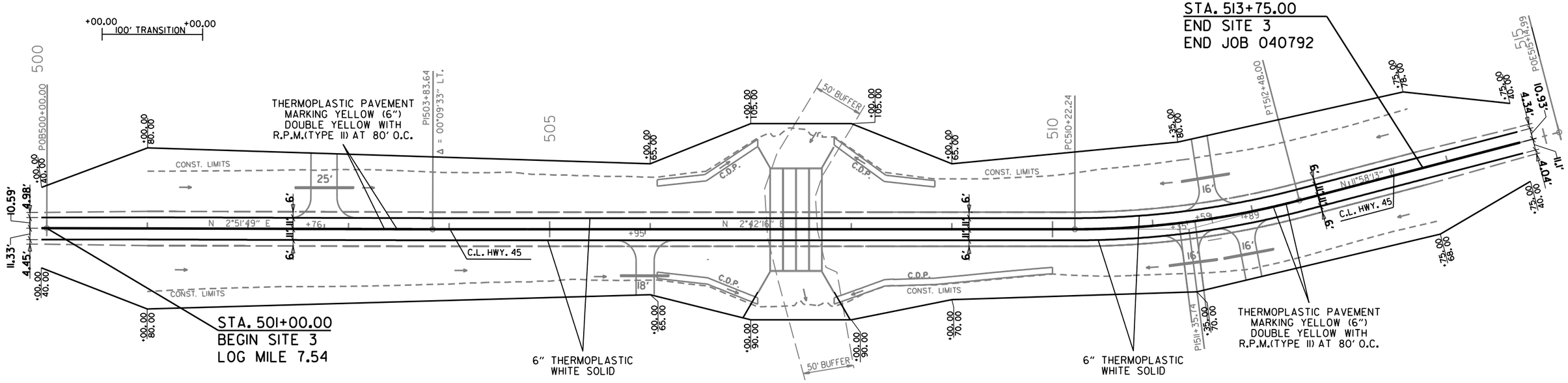

BA42315 6/27/2024
R040792.DGN

SITE 3
PERMANENT PAVEMENT PARKING DETAILS

DATE REVISED	DATE FILMED	DATE REVISED	DATE FILMED	FED.RD. DIST.NO.	STATE	FED.AID PROJ.NO.	SHEET NO.	TOTAL SHEETS
				6	ARK.			
				JOB NO.		040792	49	122

(2) QUANTITIES

STATE OF ARKANSAS
LICENSED PROFESSIONAL ENGINEER
No. 11425
TRINITY D. SMITH
08-15-2024

CONSTRUCTION PAVEMENT MARKINGS AND PERMANENT PAVEMENT MARKINGS

DESCRIPTION	STAGE 1	STAGE 2	STAGE 3	END OF JOB	CONSTRUCTION PAVEMENT MARKINGS	RAISED PAVEMENT MARKERS	THERMOPLASTIC PAVEMENT MARKING		
						TYPE II	6"		12"
						(YELLOW/YELLOW)	WHITE	YELLOW	WHITE
	LIN. FT. - EACH				LIN. FT.	EACH	LIN. FT.		LIN. FT.
CONSTRUCTION PAVEMENT MARKINGS	21170	23090	21195		65455				
RAISED PAVEMENT MARKERS TYPE II (YELLOW/YELLOW)	67	73	67	67		274			
THERMOPLASTIC PAVEMENT MARKING WHITE (6")				10627			10455		
THERMOPLASTIC PAVEMENT MARKING YELLOW (6")				10138				10530	
THERMOPLASTIC PAVEMENT MARKING WHITE (12")									11
TOTALS:					**65455**	**274**	**10455**	**10530**	**11**

NOTE: THIS IS A LOW TRAFFIC VOLUME ROAD AS DEFINED IN SECTION 604.03, STANDARD SPECIFICATIONS FOR HIGHWAY CONSTRUCTION.

NOTE: THE 6" YELLOW STRIPING QUANTITY HAS BEEN ESTIMATED BASED ON A DOUBLE YELLOW CENTERLINE STRIPE FOR THE ENTIRE PROJECT.
THE PROJECT MUST BE MARKED FOR PASSING/NO PASSING ZONES PRIOR TO THE PLACEMENT OF ANY FINAL STRIPING.
CONTACT THE MAINTENANCE DIVISION AFTER THE FINAL LIFT OF SURFACE COURSE HAS BEEN PLACED TO SCHEDULE THE ZONING OF THE PROJECT.

RUMBLE STRIPS IN ASPHALT SHOULDERS

STATION	STATION	LOCATION	* RUMBLE STRIPS IN ASPHALT SHOULDERS
			LIN.FT.
100+00.00	109+05.00	SITE 1 - RT.	726
100+00.00	108+84.00	SITE 1 - LT.	706
111+67.00	121+22.03	SITE 1 - RT.	751
111+44.00	121+22.03	SITE 1 - LT.	786
303+00.00	309+32.00	SITE 2 - RT.	506
303+00.00	309+32.00	SITE 2 - LT.	506
311+79.00	316+00.00	SITE 2 - RT.	338
311+79.00	314+34.00	SITE 2 - LT.	205
315+63.00	316+00.00	SITE 2 - LT.	37
501+00.00	513+75.00	SITE 3 - RT.	1022
501+00.00	513+75.00	SITE 3 - LT.	1018
TOTAL:			**6601**

* QUANTITY ESTIMATED.
SEE SECTION 104.03 OF THE STD. SPECS.
TO BE USED IF AND WHERE DIRECTED BY THE ENGINEER.

ADVANCE WARNING SIGNS AND DEVICES

SIGN NUMBER	DESCRIPTION	SIGN SIZE	STAGE 1	STAGE 2	STAGE 3	MAXIMUM NUMBER REQUIRED	TOTAL SIGNS REQUIRED		CONSTRUCTION PROJECT INFORMATION SIGN UPDATE	VERTICAL PANELS	TRAFFIC DRUMS	BARRICADES (TYPE III)		FURNISHING & INSTALLING PRECAST CONC. BARRIER	RELOCATING PRECAST CONCRETE BARRIER	TEMPORARY IMPACT ATTENUATION BARRIER	TEMP. IMPACT ATTEN.BARR. (REPAIR)	TEMP. IMPACT ATTEN. BARR. (RELOCATION)
												RIGHT	LEFT					
			LIN. FT. - EACH				NO.	SQ. FT.	EACH	EACH		LIN. FT.		LIN. FT.		EACH		
W20-1	ROAD WORK 1500 FT.	48"x48"	4	4	4	4	4	64.0										
W20-1	ROAD WORK 1000 FT.	48"x48"	4	4	4	4	4	64.0										
W20-1	ROAD WORK 500 FT.	48"x48"	4	4	4	4	4	64.0										
W20-1	ROAD WORK AHEAD	48"x48"	5	5	5	5	5	80.0										
G20-2	END ROAD WORK	48"x24"	5	5	5	5	5	40.0										
W1-4AR	REVERSE CURVE RT.	48"x48"		1		1	1	16.0										
W1-4AL	REVERSE CURVE LT.	48"x48"		1		1	1	16.0										
W13-1	SPEED LIMIT (ADVISORY)	24"x24"		2		2	2	8.0										
R11-2	ROAD CLOSED	48"x30"	10	14		14	14	140.0										
OM-3L	OBJECT MARKER	12"x36"	6	6	3	6	6	18.0										
OM-3R	OBJECT MARKER	12"x36"	8	8	4	8	8	24.0										
W1-8	CHEVRONS	18"x24"		8	8	8	8	24.0										
R4-1	DO NOT PASS	24"x30"	8	8	8	8	8	40.0										
W21-5a	RIGHT SHOULDER CLOSED	36"x36"	8	8	8	8	8	72.0										
W8-1	BUMP	30"x30"	6	6	6	6	6	37.5										
SPECIAL	CONSTRUCTION PROJECT INFORMATION SIGN	96"x48"	2	2	2	2	2	64.0										
	CONSTRUCTION PROJECT INFORMATION SIGN UPDATE	96"x48"							10.0									
	VERTICAL PANELS		111	104	72	111				111								
	TRAFFIC DRUMS		111	104	72	111					111							
				1		1												
	TYPE III BARRICADE-RT. (8')		5	7		7						56						
	TYPE III BARRICADE-LT. (8')		5	7		7							56					
	FURNISHING AND INSTALLING PRECAST CONCRETE BARRIER		926	1106		2032								2032				
	RELOCATING PRECAST CONCRETE BARRIER			926	713	1639									1639			
	TEMPORARY IMPACT ATTENUATION BARRIER		1	11	1	13										13		
	TEMPORARY IMPACT ATTENUATION BARRIER (REPAIR)		1	11	1	13											13	
	TEMPORARY IMPACT ATTENUATION BARRIER (RELOCATION)			1		1												1
TOTALS:								**771.5**	**10.0**	**111**	**111**	**56**	**56**	**2032**	**1639**	**13**	**13**	**1**

NOTE: THIS IS A LOW TRAFFIC VOLUME ROAD AS DEFINED IN SECTION 604.03, STANDARD SPECIFICATIONS FOR HIGHWAY CONSTRUCTION.

RD38049 8/7/2024
R040792.DGN

QUANTITIES

DATE REVISED	DATE FILMED	DATE REVISED	DATE FILMED	FED.RD. DIST.NO.	STATE	FED.AID PROJ.NO.	SHEET NO.	TOTAL SHEETS
				6	ARK.			
				JOB NO.		040792	50	122

(2) QUANTITIES

CLEARING AND GRUBBING

STATION	STATION	LOCATION	CLEARING	GRUBBING
			STATION	
100+00	121+22	HWY. 45 - SITE 1	22	22
303+00	316+00	HWY. 45 - SITE 2	13	13
501+00	513+75	HWY. 45 - SITE 3	13	13
TOTALS:			48	48

REMOVAL AND DISPOSAL OF ITEMS

STATION	STATION	LOCATION	GUARDRAIL	SIGNS
			LIN. FT.	EACH
110+07	110+35	HWY. 45 SITE 1 LT.	28	
110+08	110+36	HWY. 45 SITE 1 RT.	27	
111+06	111+33	HWY. 45 SITE 1 LT.	27	
111+07	111+33	HWY. 45 SITE 1 RT.	26	
314+40	314+43	HWY. 45 SITE 2 LT.		1
506+87	508+15	HWY. 45 SITE 3 LT.	128	
506+87	508+14	HWY. 45 SITE 3 RT.	128	
TOTALS:			364	1

NOTE: THE QUANTITY SHOWN ABOVE FOR THE REMOVAL AND DISPOSAL OF GUARDRAIL SHALL INCLUDE THE REMOVAL AND DISPOSAL OF ALL GUARDRAIL TERMINALS AND TERMINAL ANCHOR POSTS.

MAILBOXES

LOCATION	MAILBOXES	MAILBOX SUPPORTS (SINGLE)
	EACH	
ENTIRE PROJECT	7	7
TOTALS:	7	7

REMOVAL AND DISPOSAL OF FENCE

STATION	STATION	LOCATION	FENCE	GATES
			LIN. FT.	EACH
100+99	103+01	HWY. 45 SITE 1 LT.	227	
101+30	103+88	HWY. 45 SITE 1 RT.	315	
103+19	104+85	HWY. 45 SITE 1 LT.	275	
104+04	104+13	HWY. 45 SITE 1 RT.	17	
104+85	107+25	HWY. 45 SITE 1 LT.	260	
107+42	109+58	HWY. 45 SITE 1 LT.	231	
108+87	120+05	HWY. 45 SITE 1 LT.	1173	
109+70	110+44	HWY. 45 SITE 1 RT.	74	
111+15	111+57	HWY. 45 SITE 1 RT.	49	
113+37	120+09	HWY. 45 SITE 1 RT.	671	
120+29	121+22	HWY. 45 SITE 1 LT.	109	
303+00	304+31	HWY. 45 SITE 2 RT.	133	
304+83	308+72	HWY. 45 SITE 2 RT.	411	
310+98	312+22	HWY. 45 SITE 2 RT.	175	
312+38	313+45	HWY. 45 SITE 2 RT.	159	
313+45	313+60	HWY. 45 SITE 2 RT.		1
313+60	315+25	HWY. 45 SITE 2 RT.	267	
315+44	315+68	HWY. 45 SITE 2 RT.	53	
315+24	316+00	HWY. 45 SITE 2 LT.	283	
501+00	502+59	HWY. 45 SITE 3 LT.	198	
501+00	505+90	HWY. 45 SITE 3 RT.	519	
502+94	505+80	HWY. 45 SITE 3 LT.	359	
506+04	511+70	HWY. 45 SITE 3 RT.	638	
510+50	511+43	HWY. 45 SITE 3 LT.	185	
512+48	513+75	HWY. 45 SITE 3 RT.	126	
TOTALS:			6907	1

REMOVAL AND DISPOSAL OF CULVERTS

STATION	DESCRIPTION	PIPE CULVERTS
		EACH
100+90	HWY. 45 - MAIN LANES LT.	1
103+18	HWY. 45 - MAIN LANES LT.	1
107+35	HWY. 45 - MAIN LANES LT.	1
304+55	HWY. 45 - MAIN LANES RT.	1
314+97	HWY. 45 - MAIN LANES LT.	2
502+76	HWY. 45 - MAIN LANES LT.	1
511+35	HWY. 45 - MAIN LANES RT.	1
511+59	HWY. 45 - MAIN LANES LT.	1
511+89	HWY. 45 - MAIN LANES RT.	1
TOTALS:		10

NOTE: QUANTITIES SHOWN ABOVE SHALL INCLUDE REMOVAL & DISPOSAL OF ALL HEADWALLS AND FLARED END SECTIONS IF APPLICABLE.

STATE OF ARKANSAS
LICENSED PROFESSIONAL ENGINEER
No. 11425
TRINITY D. SMITH
08-15-2024

DUMPED RIPRAP AND FILTER BLANKET

STATION	LOCATION	DUMPED RIPRAP	FILTER BLANKET
		CU. YD.	SQ. YD.
311+10	SITE 2 - DETOUR	53	106
507+45	SITE 3 - DETOUR	47	93
	* TO BE USED IF AND WHERE	25	50
	DIRECTED BY THE ENGINEER		
TOTALS:		125	249

*NOTE: QUANTITY ESTIMATED.
SEE SECTION 104.03 OF THE STANDARD SPECIFICATIONS

NOTE: FILTER BLANKET SHALL BE GEOTEXTILE FABRIC (TYPE 5).

EROSION CONTROL

STATION	STATION	LOCATION	PERMANENT EROSION CONTROL					TEMPORARY EROSION CONTROL								
			SEEDING	LIME	MULCH COVER	WATER	SECOND SEEDING APPLICATION	TEMPORARY SEEDING	MULCH COVER	WATER	SAND BAG DITCH CHECKS (E-5)	ROCK DITCH CHECKS (E-6)	SILT FENCE (E-11)	SEDIMENT BASIN (E-14)	OBLITERATION OF SEDIMENT BASIN	*SEDIMENT REMOVAL & DISPOSAL
			ACRE	TON	ACRE	M.GAL.	ACRE	ACRE	ACRE	M.GAL.	BAG	CU.YD.	LIN. FT.	CU.YD.	CU.YD.	CU. YD.
100+00.00	121+22.03	CLEARING AND GRUBBING - SITE 1						5.69	5.69	116.1	352	45	1835			99
100+00.00	121+22.03	STAGE 1 - SITE 1	2.92	5.84	2.92	297.8	2.92	4.09	4.09	83.4	220	18	218	43	43	67
100+00.00	121+22.03	STAGE 2 - SITE 1	0.83	1.66	0.83	84.7	0.83	1.60	1.60	32.6	22	6	1475			58
100+00.00	121+22.03	STAGE 3 - SITE 1	2.92	5.84	2.92	297.8	2.92	4.09	4.09	83.4	66	12				7
303+00.00	316+00.00	CLEARING AND GRUBBING - SITE 2						4.44	4.44	90.6	220	33	713			47
303+00.00	316+00.00	STAGE 1 - SITE 2	1.15	2.30	1.15	117.3	1.15	2.64	2.64	53.9	88	15	519			28
303+00.00	316+00.00	STAGE 2 - SITE 2	1.12	2.24	1.12	114.2	1.12	1.80	1.80	36.7	66	9				6
303+00.00	316+00.00	STAGE 3 - SITE 2	1.15	2.30	1.15	117.3	1.15	2.64	2.64	53.9	66	12				7
501+00.00	513+75.00	CLEARING AND GRUBBING - SITE 3						3.80	3.80	77.5	308	36	354			39
501+00.00	513+75.00	STAGE 1 - SITE 3	1.45	2.90	1.45	147.9	1.45	1.98	1.98	40.4	132	15				11
501+00.00	513+75.00	STAGE 2 - SITE 3	1.31	2.62	1.31	133.6	1.31	1.82	1.82	37.1	110	15				10
501+00.00	513+75.00	STAGE 3 - SITE 3	1.45	2.90	1.45	147.9	1.45	1.98	1.98	40.4	132	18				12
*ENTIRE PROJECT TO BE USED IF AND WHERE DIRECTED BY THE ENGINEER.			3.58	7.15	3.58	364.63	3.58	9.14	9.14	186.50	462	60	1278.50	10.75	10.75	99
TOTALS:			17.88	35.75	17.88	1823.1	17.88	45.71	45.71	932.5	2244	294	6393	54	54	490

BASIS OF ESTIMATE:
LIME .....2 TONS / ACRE OF SEEDING
WATER.....102.0 M.G. / ACRE OF SEEDING
WATER.....20.4 M.G. / ACRE OF TEMPORARY SEEDING
SAND BAG DITCH CHECKS.....22 BAGS / LOCATION
ROCK DITCH CHECKS.....3 CU.YD./LOCATION
NOTE: THE TEMPORARY EROSION CONTROL DEVICES SHOWN ABOVE AND ON THE PLANS SHALL BE INSTALLED IN SUCH A SEQUENCE AS TO DETER EROSION AND SEDIMENTATION ON U.S. WATERWAYS AS EXPLAINED BY THE NATIONAL POLLUTANT DISCHARGE ELIMINATION SYSTEM PERMIT.

*QUANTITIES ESTIMATED.
SEE SECTION 104.03 OF THE STD. SPECS.

RD38049 8/7/2024
R040792.DGN

QUANTITIES

DATE REVISED	DATE FILMED	DATE REVISED	DATE FILMED	FED.RD. DIST.NO.	STATE	FED.AID PROJ.NO.	SHEET NO.	TOTAL SHEETS
				6	ARK.			
				JOB NO.		040792	51	122

(2) QUANTITIES

STATE OF ARKANSAS
LICENSED PROFESSIONAL ENGINEER
No. 11425
TRINITY D. SMITH
08-15-2024

SOIL LOG

STATION	LATITUDE			LONGITUDE			LOCATION	DEPTH	LIQUID LIMIT	PLASTICITY INDEX	AASHTO CLASSIFICATION	COLOR
	DEG	MIN	SEC	DEG	MIN	SEC		FEET				
107+00	35	3	26.50	94	20	50.30	06 RT.	0-5	43	24	A-7-6 (17)	BROWN
107+00	35	3	26.50	94	20	50.20	20 RT.	0-5	31	13	A-6 (4)	BROWN
107+00	35	3	26.50	94	20	50.20	20 RT.	0-5	33	14	A-2-6 (1)	BROWN
113+00	35	3	30.90	94	20	48.70	06 LT.	0-5	33	16	A-6 (10)	BROWN
113+00	35	3	31.00	94	20	48.80	20 LT.	0-5				BROWN
307+00	35	6	8.40	94	22	3.00	06 RT.	0-5	39	22	A-6 (18)	BR/GR
307+00	35	6	8.40	94	22	2.80	20 RT.	0-5	33	15	A-6 (10)	BROWN
307+00	35	6	8.40	94	22	2.80	20 RT.	0-5	32	13	A-6 (7)	BROWN
314+00	35	6	15.10	94	22	2.90	06 LT.	0-5	49	30	A-7-6 (20)	BROWN
314+00	35	6	15.10	94	22	3.00	20 LT.	0-5	32	14	A-6 (4)	BROWN
504+00	35	6	55.10	94	22	1.50	06 RT.	0-5	39	23	A-6 (14)	BROWN
504+00	35	6	55.10	94	22	1.40	20 RT.	0-5	34	17	A-6 (5)	BROWN
511+00	35	7	2.20	94	22	1.50	06 LT.	0-5	42	21	A-7-6 (19)	BROWN
511+00	35	7	2.20	94	22	1.60	20 LT.	0-4 z	36	16	A-6 (7)	BROWN
511+00	35	7	2.20	94	22	1.60	20 LT.	0-4 z	36	16	A-6 (7)	BROWN

SOIL CHARACTERISTICS TABULATED ABOVE ARE REPRESENTATIVE AT THE LOCATION OF THE SAMPLE, AND FROM SURFACE INDICATIONS ARE TYPICAL FOR THE LIMITS SHOWN. THESE DATA ARE SHOWN FOR INFORMATION ONLY. THE STATE WILL NOT BE RESPONSIBLE FOR VARIATIONS IN THE SOIL CHARACTERISTICS AND/OR EXTENT OF SAME DIFFERING FROM THE ABOVE TABULATIONS.
Z- AUGER REFUSAL

CONCRETE DITCH PAVING

STATION	STATION	LOCATION	LENGTH	"W"	CONC. DITCH PAVING (TYPE B)	SOLID SODDING	WATER
			LIN. FT.	FEET	SQ. YD.	SQ. YD.	M. GAL.
111+02.00	111+60.00	HWY. 45 - MAIN LANES LT.	58.00	6.33	40.79	25.78	0.32
114+65.00	118+00.00	HWY. 45 - MAIN LANES RT.	335.00	6.33	235.62	148.89	1.88
506+07.00	507+07.00	HWY. 45 - MAIN LANES RT.	100.00	6.33	70.33	44.44	0.56
506+07.00	507+07.00	HWY. 45 - MAIN LANES LT.	100.00	6.33	70.33	44.44	0.56
507+83.00	508+83.00	HWY. 45 - MAIN LANES LT.	100.00	6.33	70.33	44.44	0.56
507+83.00	510+00.00	HWY. 45 - MAIN LANES RT.	217.00	6.33	152.62	96.44	1.22
TOTALS:					**640.02**	**404.43**	**5.10**

BASIS OF ESTIMATE:
WATER.....12.6 GAL. / SQ. YD. OF SOLID SODDING.

EROSION CONTROL MATTING

STATION	STATION	LOCATION	LENGTH	CLASS 3
			LIN. FT.	SQ. YD.
311+43.50	313+52.36	HWY. 45 - MAIN LANES RT.	208.86	185.65
TOTAL:				**185.65**

NOTE: AVERAGE WIDTH = 8'-0"

ACHM PATCHING OF EXISTING ROADWAY

DESCRIPTION	TON
ENTIRE PROJECT - TO BE USED IF AND WHERE	25
DIRECTED BY THE ENGINEER	
TOTAL:	**25**

NOTE: QUANTITY ESTIMATED.
SEE SECTION 104.03 OF THE STD. SPECS.

SELECTED PIPE BEDDING

LOCATION	SELECTED PIPE BEDDING
	CU.YD.
ENTIRE PROJECT TO BE USED IF	
AND WHERE DIRECTED BY THE	50
ENGINEER	
TOTAL:	**50**

NOTE: QUANTITY ESTIMATED.
SEE SECTION 104.03 OF THE STD. SPECS.

ASPHALT CONCRETE PATCHING FOR MAINTENANCE OF TRAFFIC

LOCATION	TON	TACK COAT
		GALLON
ENTIRE PROJECT - TO BE USED IF AND WHERE	25	50
DIRECTED BY THE ENGINEER		
TOTALS:	**25**	**50**

NOTE: QUANTITIES ARE ESTIMATED.
SEE SECTION 104.03 OF THE STD. SPECS.

BASIS OF ESTIMATE:
ASPHALT CONCRETE PATCHING FOR MAINTENANCE OF TRAFFIC...25 TON/MILE
TACK COAT FOR MAINTENANCE OF TRAFFIC.....50 GAL./MILE

BENCH MARKS

STATION	LOCATION	BENCH MARKS
		EACH
109+30.97	HWY. 45 - BRIDGE NO. 07567 - LT.	1
309+67.50	HWY. 45 - BRIDGE NO. 07568 - LT.	1
507+45.00	HWY. 45 - MAIN LANES HEADWALL LT.	1
TOTAL:		**3**

NOTE: SHOWN FOR INFORMATION ONLY. BENCH MARKS SHALL BE FURNISHED AND PLACED BY STATE FORCES.

APPROACH GUTTERS AND SLABS

STATION	STATION	LOCATION	APPROACH GUTTER (TYPE F)	APPROACH SLABS (TYPE F)	REINFORCING STEEL-RDWY. (GR. 60)	AGGREGATE BASE CRS. (CLASS 7)
			CU.YD.	CU.YD.	POUND	TON
108+80.97	109+15.97	HWY. 45 LT.	4.20		210	3.41
108+95.97	109+30.97	HWY. 45 APPROACH SLAB		65.50	8183	39.00
109+10.97	109+45.97	HWY. 45 RT.	4.20		210	3.41
111+04.03	111+39.03	HWY. 45 LT.	4.20		210	3.41
111+19.03	111+54.03	HWY. 45 APPROACH SLAB		65.50	8183	39.00
111+34.03	111+69.03	HWY. 45 RT.	4.20		210	3.41
309+32.50	309+67.50	HWY. 45 LT.	4.20		210	3.57
309+32.50	309+67.50	HWY. 45 APPROACH SLAB		59.21	7152	39.00
309+32.50	309+67.50	HWY. 45 RT.	4.20		210	3.57
311+43.50	311+78.50	HWY. 45 LT.	4.20		210	3.57
311+43.50	311+78.50	HWY. 45 APPROACH SLAB		59.21	7152	39.00
311+43.50	311+78.50	HWY. 45 RT.	4.20		210	3.57
TOTALS:			**33.60**	**249.42**	**32350**	**183.92**

NOTE: USE T =13" FOR 6' SHOULDER.

STRUCTURES

STATION	DESCRIPTION	PIPE CULVERT ALTERNATES		FLARED END SECTION ALTERNATES FOR PIPE CULVERT ALTERNATES	TEMPORARY CULVERTS			SPAN	HEIGHT	LENGTH	CLASS S CONCRETE-ROADWAY	REINF. STEEL-ROADWAY (GRADE 60)	UNCL.EXC. FOR STR.-ROADWAY	SOLID SODDING	WATER	STD. DWG. NOS.
		ALT. 1 (CLASS V)	ALT. 2, 3, 4, 5, 6, AND 7													
		24"	24"	24"	18"	24"	57" X 38" ARCH									
		LIN. FT.		EACH	LIN. FT.			LIN. FT.			CU.YD.	POUND	CU.YD.	SQ.YD.	M.GAL.	
101+67	SITE 1 - INSTALL 24" X 64' PIPE CULVERT	64	64	2										16	0.20	PCC-1, PCM-1, PCP-1, PCP-2, PCP-3, FES-1, FES-2
105+00	SITE 1 - INSTALL 18" X 55' TEMPORARY PIPE CULVERT				55											PCC-1, PCM-1, PCP-1, PCP-2, PCP-3
309+00	SITE 2 - INSTALL 24" X 85' TEMP. PIPE CULVERT					85										PCC-1, PCM-1, PCP-1, PCP-2, PCP-3
314+96	SITE 2 - HWY 252 TURNOUT - INSTALL TEMP. DBL. ARCH PIPE LT.						80									PCC-1, PCM-1
505+95	SITE 3 - INSTALL 18" X 34' TEMPORARY PIPE CULVERT				34											PCC-1, PCM-1, PCP-1, PCP-2, PCP-3
507+00	SITE 3 - INSTALL 18" X 68' TEMPORARY PIPE CULVERT				68											
508+00	SITE 3 - INSTALL 18" X 66' TEMPORARY PIPE CULVERT				66											
SUBTOTALS:		**64**	**64**	**2**	**223**	**85**	**80**							**16**	**0.20**	
STRUCTURES OVER 20' - 0" SPAN																
507+45	QUAD. 12'X9'X103' R.C. BOX CULVERT							12	9	103	643.95	80033	259.09	45.46	0.57	RCB-1, RCB-2, PBC-1, SPECIAL DETAILS
SUBTOTALS:											**643.95**	**80033**	**259.09**	**45.46**	**0.57**	
TOTALS:		**64**	**64**	**2**	**223**	**85**	**80**				**643.95**	**80033**	**259.09**	**61.46**	**0.77**	

BASIS OF ESTIMATE:
WATER.....12.6 GAL. / SQ. YD. OF SOLID SODDING

NOTE: FOR R.C. PIPE CULVERT INSTALLATIONS USE TYPE 3 BEDDING UNLESS OTHERWISE SPECIFIED.

NOTE: FOR C.M. PIPE CULVERT INSTALLATIONS USE TYPE 2 BEDDING UNLESS OTHERWISE SPECIFIED.

8/9/2024
be42315 R040792.DGN

QUANTITIES

DATE REVISED	DATE FILMED	DATE REVISED	DATE FILMED	FED.RD. DIST.NO.	STATE	FED.AID PROJ.NO.	SHEET NO.	TOTAL SHEETS
09/06/2024				6	ARK.			
				JOB NO.		040792	52	122

(2) QUANTITIES

STATE OF ARKANSAS
LICENSED PROFESSIONAL ENGINEER
No. 11425
TRINITY D. SMITH
09-06-2024

FENCING

STATION	STATION	LOCATION	WIRE FENCE (TYPE D)	* 16'-0" GATES
			LIN. FT.	EACH
100+99	103+15	HWY. 45 SITE 1 LT.	207	
101+30	103+46	HWY. 45 SITE 1 RT.	212	
103+47	106+27	HWY. 45 SITE 1 LT.	283	
104+96	105+01	HWY. 45 SITE 1 RT.	5	
106+51	107+23	HWY. 45 SITE 1 LT.	77	
107+47	108+50	HWY. 45 SITE 1 LT.	125	
109+00	120+00	HWY. 45 SITE 1 LT.	1125	
113+37	120+13	HWY. 45 SITE 1 RT.	673	
120+29	121+22	HWY. 45 SITE 1 LT.	93	
303+00	304+31	HWY. 45 SITE 2 RT.	133	
304+83	308+72	HWY. 45 SITE 2 RT.	390	
311+05	313+43	HWY. 45 SITE 2 RT.	239	
313+45	313+61	HWY. 45 SITE 2 RT.		1
315+22	316+00	HWY. 45 SITE 2 LT.	132	
315+44	315+68	HWY. 45 SITE 2 RT.	22	
501+00	502+59	HWY. 45 SITE 3 LT.	159	
501+00	505+90	HWY. 45 SITE 3 RT.	490	
502+94	505+74	HWY. 45 SITE 3 LT.	280	
506+04	507+07	HWY. 45 SITE 3 RT.	121	
508+83	511+27	HWY. 45 SITE 3 RT.	370	
510+50	510+89	HWY. 45 SITE 3 LT.	36	
511+27	511+43	HWY. 45 SITE 3 LT.	15	
511+42	511+64	HWY. 45 SITE 3 RT.	24	
512+48	513+75	HWY. 45 SITE 3 LT.	127	
TOTALS:			**5338**	**1**

* DENOTES ALTERNATE BID ITEM.

EARTHWORK

STATION	STATION	LOCATION / DESCRIPTION	UNCLASSIFIED EXCAVATION	COMPACTED EMBANKMENT
			CU. YD.	
100+00	121+22	SITE 1-STAGE 1-MAIN LANES	7730	10113
100+00	121+22	SITE 1-STAGE 2-MAIN LANES	1038	3677
100+00	121+22	SITE 1-STAGE 3-MAIN LANES	1233	2
303+00	316+00	SITE 2-STAGE 1-MAIN LANES	1181	2132
303+00	316+00	SITE 2-STAGE 2-MAIN LANES	2810	2984
303+00	316+00	SITE 2-STAGE 3-MAIN LANES	5849	1445
501+00	513+75	SITE 3-STAGE 1-MAIN LANES	3011	2855
501+00	513+75	SITE 3-STAGE 2-MAIN LANES	2564	3301
501+00	513+75	SITE 3-STAGE 3-MAIN LANES	3488	585
109+31	111+19	BRIDGE EXCAVATION - SITE 1	1237	
309+68	311+44	BRIDGE EXCAVATION - SITE 2	423	
ENTIRE	PROJECT	APPROACHES	65	1500
ENTIRE	PROJECT	TEMPORARY APPROACHES	300	
507+07	507+83	CHANNEL CHANGE - SITE 3	532	23
TOTALS:			**31461**	**28617**

NOTE: EARTHWORK QUANTITIES SHOWN ABOVE SHALL BE PAID AS PLAN QUANTITY.

4" PIPE UNDERDRAIN

STATION	STATION	LOCATIONS	4" PIPE UNDERDRAINS	UNDERDRAIN OUTLET PROTECTORS
			LIN. FT.	EACH
* ENTIRE PROJECT TO BE USED IF AND			2500	10
WHERE DIRECTED BY THE ENGINEER				
TOTALS:			**2500**	**10**

* NOTE: QUANTITY ESTIMATED.
SEE SECTION 104.03 OF THE STD. SPECS.

SOIL STABILIZATION

STATION	STATION	LOCATION / DESCRIPTION	SOIL STABILIZATION
			TON
ENTIRE	PROJECT	TO BE USED IF AND WHERE	100
		DIRECTED BY THE ENGINEER	
TOTAL:			**100**

QUANTITY ESTIMATED.
SEE SECTION 104.03 OF THE STD. SPECS.

GUARDRAIL

STATION	STATION	LOCATION	GUARDRAIL (TYPE A)	THRIE BEAM GUARDRAIL TERMINAL	GUARDRAIL TERMINAL (TYPE 2)
			LIN. FT.	EACH	
108+10.38	109+04.13	LT. SIDE	25	1	1
108+45.63	109+39.38	RT. SIDE	25	1	1
111+10.62	112+54.37	LT. SIDE	75	1	1
111+44.77	112+38.52	RT. SIDE	25	1	1
307+38.75	309+57.50	RT. SIDE	150	1	1
308+38.75	309+57.50	LT. SIDE	50	1	1
311+53.50	312+72.25	RT. SIDE	50	1	1
311+53.50	313+72.25	LT. SIDE	150	1	1
TOTALS:			**550**	**8**	**8**

DRIVEWAYS & TURNOUTS

STATION	SIDE	LOCATION	WIDTH	ACHM SURFACE COURSE (1/2") 220 LBS. PER SQ. YD. (PG 64-22)		AGGREGATE BASE COURSE (CLASS 7)	SIDE DRAINS		STANDARD DRAWINGS
							18"	48"	
			FEET	SQ. YD.	TON	TON	LIN. FT.		
100+90	LT.	HWY. 45 SITE 1	16	30.43	3.35	12.43	32		PCC-1, PCM-1, PCP-1, PCP-2, PCP-3
103+18	LT.	HWY. 45 SITE 1	16	30.43	3.35	12.43	32		PCC-1, PCM-1, PCP-1, PCP-2, PCP-3
103+95	RT.	HWY. 45 SITE 1	16	30.43	3.35	12.43			PCC-1, PCM-1, PCP-1, PCP-2, PCP-3
106+08	RT.	HWY. 45 SITE 1	20	36.65	4.03	14.97	32		PCC-1, PCM-1, PCP-1, PCP-2, PCP-3
107+00	RT.	HWY. 45 SITE 1	16	30.43	3.35	12.43	30		PCC-1, PCM-1, PCP-1, PCP-2, PCP-3
107+35	LT.	HWY. 45 SITE 1	16	30.43	3.35	12.43	42		PCC-1, PCM-1, PCP-1, PCP-2, PCP-3
108+16	RT.	HWY. 45 SITE 1	20	36.65	4.03	14.97	34		PCC-1, PCM-1, PCP-1, PCP-2, PCP-3
120+17	LT.	HWY. 45 SITE 1	16	30.43	3.35	12.43			
121+36	RT.	HWY. 45 SITE 1	16	37.01	4.07	15.11			
301+74	LT.	HWY. 45 SITE 2 - TEMP DRIVE	20	44.12	4.85	18.02			
304+55	RT.	HWY. 45 SITE 2	20	36.65	4.03	14.97	50		PCC-1, PCM-1, PCP-1, PCP-2, PCP-3
313+53	RT.	HWY. 45 SITE 2	16	30.43	3.35	12.43	44		PCC-1, PCM-1, PCP-1, PCP-2, PCP-3
314+96	LT.	HWY. 45 SITE 2 - HWY. 252 TURNOUT	22	125.11	13.76	51.09		152	PCC-1, PCM-1, PCP-1, PCP-2, PCP-3
315+35	RT.	HWY. 45 SITE 2	16	30.43	3.35	12.43			
502+76	LT.	HWY. 45 SITE 3	25	44.43	4.89	18.14	56		PCC-1, PCM-1, PCP-1, PCP-2, PCP-3
511+35	RT.	HWY. 45 SITE 3	16	30.43	3.35	12.43	46		PCC-1, PCM-1, PCP-1, PCP-2, PCP-3
511+59	LT.	HWY. 45 SITE 3	16	30.43	3.35	12.43	46		PCC-1, PCM-1, PCP-1, PCP-2, PCP-3
511+89	RT.	HWY. 45 SITE 3	16	30.43	3.35	12.43	50		PCC-1, PCM-1, PCP-1, PCP-2, PCP-3
									PCC-1, PCM-1, PCP-1, PCP-2, PCP-3
* ENTIRE PROJECT TEMPORARY DRIVES						300.00			PCC-1, PCM-1, PCP-1, PCP-2, PCP-3
TOTALS:				**695.35**	**76.51**	**584.00**	**494**	**152**	

BASIS OF ESTIMATE:
ACHM SURFACE COURSE (1/2").....93.7% MIN. AGGR.....6.3% ASPHALT BINDER

QUANTITY ESTIMATED
SEE SECTION 104.03 OF THE STD. SPECS.
* TO BE USED IF AND WHERE DIRECTED BY THE ENGINEER.

NOTE: FOR R.C. PIPE CULVERT INSTALLATIONS USE TYPE 3 BEDDING UNLESS OTHERWISE SPECIFIED.
NOTE: FOR C.M. PIPE CULVERT INSTALLATIONS USE TYPE 2 BEDDING UNLESS OTHERWISE SPECIFIED.

COLD MILLING ASPHALT PAVEMENT

STATION	STATION	LOCATION	AVG. WIDTH	COLD MILLING ASPHALT PAVEMENT
			FEET	SQ. YD.
99+00.00	100+00.00	MAIN LANES	20.00	222.22
121+21.03	122+21.03	MAIN LANES	20.00	222.22
302+00.00	303+00.00	MAIN LANES	22.00	244.44
316+00.00	317+00.00	MAIN LANES	22.00	244.44
500+00.00	501+00.00	MAIN LANES	22.00	244.44
513+75.00	514+75.00	MAIN LANES	22.00	244.44
TOTAL:				**1422.20**

STOCKPILE LOCATION: SEBASTIAN COUNTY ROAD DEPARTMENT MATERIAL HOLDING FACILITY.
LATITUDE: 35° 05' 13.61" N
LONGITUDE: 94° 20' 58.60" W

B042315 9/6/2024
R040792.DGN

QUANTITIES

DATE REVISED	DATE FILMED	DATE REVISED	DATE FILMED	FED.RD. DIST.NO.	STATE	FED.AID PROJ.NO.	SHEET NO.	TOTAL SHEETS
				6	ARK.			
				JOB NO.		040792	53	122

(2) QUANTITIES

STATE OF ARKANSAS
LICENSED PROFESSIONAL ENGINEER
No. 11425
TRINITY D. SMITH

08-15-2024

BASE AND SURFACING

STATION	STATION	LOCATION	LENGTH	AGGREGATE BASE COURSE (CLASS 7)		TACK COAT							ACHM BINDER COURSE (1")				ACHM SURFACE COURSE (1/2")								
				TON / STATION	TON	(0.05 GAL. PER SQ. YD.)			(0.17 GAL. PER SQ. YD.)			TOTAL GALLONS	AVG. WID.	SQ.YD.	POUND / SQ.YD.	PG 64-22	AVG. WID.	SQ.YD.	POUND / SQ.YD.	PG 64-22	AVG. WID.	SQ.YD.	POUND / SQ.YD.	PG 64-22	TOTAL PG 64-22
						TOTAL WID.	SQ.YD.	GALLON	TOTAL WID.	SQ.YD.	GALLON														
			FEET			FEET			FEET				FEET			TON	FEET			TON	FEET			TON	TON
MAIN LANES																									
99+00.00	100+00.00	HWY. 45 SITE 1 - TRANSITION	100.00	62.75	62.75	10.25	113.89	5.69	20.00	222.22	37.78	43.47	5.12	56.89	330.00	9.39	5.13	57.00	220.00	6.27	26.00	288.89	220.00	31.78	38.05
100+00.00	102+25.00	HWY. 45 SITE 1 - NOTCH AND WIDEN	225.00	125.50	282.38	40.48	1012.00	50.60				50.60	10.23	255.75	330.00	42.20	10.25	256.25	220.00	28.19	32.00	800.00	220.00	88.00	116.19
102+25.00	108+95.97	HWY. 45 SITE 1 - FULL DEPTH	670.97	206.25	1383.88	56.71	4227.86	211.39				211.39	28.46	2121.76	330.00	350.09	28.25	2106.10	220.00	231.67	32.00	2385.67	220.00	262.42	494.09
111+54.03	117+70.00	HWY. 45 SITE 1 - FULL DEPTH	615.97	206.25	1270.44	56.71	3881.30	194.07				194.07	28.46	1947.83	330.00	321.39	28.25	1933.46	220.00	212.68	32.00	2190.12	220.00	240.91	453.59
117+70.00	121+22.03	HWY. 45 SITE 1 - NOTCH AND WIDEN	352.03	125.50	441.80	40.48	1583.35	79.17				79.17	10.23	400.14	330.00	66.02	10.25	400.92	220.00	44.10	32.00	1251.66	220.00	137.68	181.78
121+22.03	122+22.03	HWY. 45 SITE 1 - TRANSITION	100.00	62.75	62.75	10.25	113.89	5.69	20.00	222.22	37.78	43.47	5.12	56.89	330.00	9.39	5.13	57.00	220.00	6.27	26.00	288.89	220.00	31.78	38.05
302+00.00	303+00.00	HWY. 45 SITE 2 - TRANSITION	100.00	58.63	58.63				22.00	244.44	41.55	41.55									26.00	288.89	220.00	31.78	31.78
303+00.00	307+00.00	HWY. 45 SITE 2 - NOTCH AND WIDEN	400.00	117.25	469.00	40.48	1799.11	89.96				89.96	10.23	454.67	330.00	75.02	10.25	455.56	220.00	50.11	32.00	1422.22	220.00	156.44	206.55
307+00.00	309+32.50	HWY. 45 SITE 2 - FULL DEPTH	232.50	187.25	435.36	56.71	1465.01	73.25				73.25	28.46	735.22	330.00	121.31	28.25	729.79	220.00	80.28	32.00	826.67	220.00	90.93	171.21
311+78.50	313+10.00	HWY. 45 SITE 2 - FULL DEPTH	131.50	187.25	246.23	56.71	828.60	41.43				41.43	28.46	415.83	330.00	68.61	28.25	412.76	220.00	45.40	32.00	467.56	220.00	51.43	96.83
313+10.00	316+00.00	HWY. 45 SITE 2 - NOTCH AND WIDEN	290.00	117.25	340.03	40.48	1304.36	65.22				65.22	10.23	329.63	330.00	54.39	10.25	330.28	220.00	36.33	32.00	1031.11	220.00	113.42	149.75
316+00.00	317+00.00	HWY. 45 SITE 2 - TRANSITION	100.00	58.63	58.63				22.00	244.44	41.55	41.55									26.00	288.89	220.00	31.78	31.78
397+43.86	402+72.00	DETOUR SITE 2 - PARTIAL FULL DEPTH	528.14	87.38	461.49	10.13	594.45	29.72				29.72					10.13	594.45	220.00	65.39	14.00	821.55	220.00	90.37	155.76
402+72.00	407+51.00	DETOUR SITE 2 - FULL DEPTH	479.00	174.75	837.05	20.25	1077.75	53.89				53.89					20.25	1077.75	220.00	118.55	28.00	1490.22	220.00	163.92	282.47
408+61.00	412+57.00	DETOUR SITE 2 - FULL DEPTH	396.00	174.75	692.01	20.25	891.00	44.55				44.55					20.25	891.00	220.00	98.01	28.00	1232.00	220.00	135.52	233.53
412+57.00	416+80.08	DETOUR SITE 2- PARTIAL FULL DEPTH	423.08	87.38	369.69	10.13	476.20	23.81				23.81					10.13	476.20	220.00	52.38	14.00	658.12	220.00	72.39	124.77
500+00.00	501+00.00	HWY. 45 SITE 3 - TRANSITION	100.00	58.63	58.63				22.00	244.44	41.55	41.55									26.00	288.89	220.00	31.78	31.78
501+00.00	503+65.00	HWY. 45 SITE 3 - NOTCH AND WIDEN	265.00	117.25	310.71	40.48	1191.91	59.60				59.60	10.23	301.22	330.00	49.70	10.25	301.81	220.00	33.20	32.00	942.22	220.00	103.64	136.84
503+65.00	510+20.00	HWY. 45 SITE 3 - FULL DEPTH	655.00	187.25	1226.49	56.71	4127.23	206.36				206.36	28.46	2071.26	330.00	341.76	28.25	2055.97	220.00	226.16	32.00	2328.89	220.00	256.18	482.34
510+20.00	513+75.00	HWY. 45 SITE 3 - NOTCH AND WIDEN	355.00	117.25	416.24	40.48	1596.71	79.84				79.84	10.23	403.52	330.00	66.58	10.25	404.31	220.00	44.47	32.00	1262.22	220.00	138.84	183.31
513+75.00	514+75.00	HWY. 45 SITE 3 - TRANSITION	100.00	58.63	58.63				22.00	244.44	41.55	41.55									26.00	288.89	220.00	31.78	31.78
700+92.51	703+93.44	DETOUR SITE 3 - PARTIAL FULL DEPTH	300.93	87.38	262.95	10.13	338.71	16.94				16.94					10.13	338.71	220.00	37.26	14.00	468.11	220.00	51.49	88.75
703+93.44	709+88.35	DETOUR SITE 3 - FULL DEPTH	594.91	174.75	1039.61	20.25	1338.55	66.93				66.93					20.25	1338.55	220.00	147.24	28.00	1850.83	220.00	203.59	350.83
709+88.35	712+20.31	DETOUR SITE 3 - PARTIAL FULL DEPTH	231.96	87.38	202.69	10.13	261.08	13.05				13.05					10.13	261.08	220.00	28.72	14.00	360.83	220.00	39.69	68.41
ADDITIONAL FOR LEVELING																									
100+00.00	102+25.00	HWY. 45 SITE 1	225.00						20.00	500.00	85.00	85.00					20.00	500.00	VAR.	224.76					224.76
117+70.00	121+22.03	HWY. 45 SITE 1	352.03						20.00	782.29	132.99	132.99					20.00	782.29	VAR.	130.80					130.80
303+00.00	307+00.00	HWY. 45 SITE 2	400.00						22.00	977.78	166.22	166.22					22.00	977.78	VAR.	253.42					253.42
313+10.00	316+00.00	HWY. 45 SITE 2	290.00						22.00	708.89	120.51	120.51					22.00	708.89	VAR.	78.86					78.86
501+00.00	503+65.00	HWY. 45 SITE 3	265.00						22.00	647.78	110.12	110.12					22.00	647.78	VAR.	71.26					71.26
510+20.00	513+75.00	HWY. 45 SITE 3	355.00						22.00	867.78	147.52	147.52					22.00	867.78	VAR.	95.46					95.46
ADDITIONAL FOR TEMPORARY WIDENING																									
111+36.50	120+00.00	HWY. 45 SITE 1	863.50	45.25	390.73	VAR.	3381.24	159.06				169.06	VAR.	1690.62	330.00	187.53	VAR.	1690.62	220.00	124.99	VAR.	1690.62	220.00	136.62	261.61
ADDITIONAL FOR SUPERELEVATION																									
100+00.00	102+53.99	SITE 1 -SUPERELEVATION TRANSITION	253.99	30.25	76.83																				
102+53.99	106+03.99	SITE 1 - SUPERELEVATION TRANSITION	350.00	30.25	105.88																				
111+35.00	112+85.39	SITE 1 - SUPERELEVATION TRANSITION	150.39	29.625	44.55																				
112+85.39	113+46.78	SITE 1 - MAXIMUM SUPERELEVATION	61.39	59.25	36.37																				
113+46.78	116+96.78	SITE 1 - SUPERELEVATION TRANSITION	350.00	29.625	103.69																				
403+99.43	405+10.43	SITE 2 - DETOUR - SUPERELEVATION TRANS.	111.00	0.375	0.42																				
405+10.43	405+29.87	SITE 2 - DETOUR- MAXIMUM SUPERELEVATION	19.44	0.75	0.15																				
405+29.87	406+40.87	SITE 2 - DETOUR - SUPERELEVATION TRANS.	111.00	0.375	0.42																				
409+01.17	410+16.17	SITE 2 - DETOUR - SUPERELEVATION TRANS.	115.00	0.375	0.43																				
410+16.17	410+34.00	SITE 2 - DETOUR - MAXIMUM SUPERELEVATION	17.83	0.75	0.13																				
410+34.00	411+49.00	SITE 2 - DETOUR - SUPERELEVATION TRANS.	115.00	0.375	0.43																				
508+42.33	510+82.21	SITE 3 - SUPERELEVATION TRANSITION	239.88	27.75	66.57																				
510+82.21	511+35.12	SITE 3 - MAXIMUM SUPERELEVATION	52.91	55.50	29.37																				
511+35.12	513+75.00	SITE 3 - SUPERELEVATION TRANSITION	239.88	27.75	66.57																				
704+46.05	715+21.84	SITE 3 - DETOUR - SUPERELEVATION TRANS.	1075.79	0.875	9.41																				
ADDITIONAL FOR METHOD OF RAISING GRADE																									
102+00.00	103+95.00	HWY. 45 SITE 1	195.00			160.00	3466.67	173.33	20.00	433.33	73.67	247.00	20.00	433.33	VAR.	406.79									
113+00.00	118+00.00	HWY. 45 SITE 1	500.00			220.00	12222.22	611.11	20.00	1111.11	188.89	800.00	20.00	1111.11	VAR.	2449.30									
TOTALS:					**11980.02**		**47293.09**	**2364.66**		**7451.16**	**1266.68**	**3631.34**		**12785.67**		**4619.47**		**20654.09**		**2572.23**		**25213.96**		**2724.16**	**5296.39**

BASIS OF ESTIMATE:
ACHM SURFACE COURSE (1/2").....93.7% MIN. AGGR.....6.3% ASPHALT BINDER
ACHM BINDER COURSE (1").....95.5% MIN. AGGR.....4.5% ASPHALT BINDER
TACK COAT QUANTITIES WERE CALCULATED USING THE EMULSIFIED ASPHALT RATES. REFER TO SS-400-1 FOR THE RESIDUAL ASPHALT APPLICATION RATES.

RD38049 8/7/2024
RO40792.DGN

DATE REVISED	DATE FILMED	DATE REVISED	DATE FILMED

FED. ROAD DIST. NO.	STATE	FED. AID PROJ. NO.	SHEET NO.	TOTAL SHEETS
6	ARK.		54	122
JOB NO.		040792		

(1) 07567 & 07568 - QUANTITIES - 64502

SCHEDULE OF BRIDGE QUANTITIES - JOB NO. 040792

BRIDGE NO.	NAME PLATE TITLE	UNIT OF STRUCTURE	ITEM NO.	205	603	801	SP, SS, & 802	SP, SS, & 802	SP & 803	SS & 804	SS & 804	SS & 805	SS & 805	SP, SS, & 807	SS & 807	SS & 808	SS & 809	812	SS & 816	SS & 816
			ITEM	REMOVAL OF EXISTING BRIDGE STRUCTURE (SITE NO. _)	TEMPORARY BRIDGE STRUCTURE (24' ROADWAY WIDTH)	UNCLASSIFIED EXCAVATION FOR STRUCTURES - BRIDGE	CLASS S CONCRETE - BRIDGE	CLASS S(AE) CONCRETE - BRIDGE	CLASS 2 PROTECTIVE SURFACE TREATMENT	REINFORCING STEEL - BRIDGE (GRADE 60)	EPOXY COATED REINFORCING STEEL (GRADE 60)	STEEL PILING (HP 12X53) (2)	PREBORING	STRUCTURAL STEEL IN BEAM SPANS (A709, GR. 50W)	PAINTING STRUCTURAL STEEL	ELASTOMERIC BEARINGS	SILICONE JOINT SEALANT	BRIDGE NAME PLATE (TYPE D)	FILTER BLANKET	DUMPED RIPRAP
			UNIT	LUMP SUM	LIN. FT.	CU. YD.	CU. YD.	CU. YD.	SQ. YD.	LB.	LB.	LIN. FT.	LIN. FT.	LB.	TON	CU. IN.	LIN. FT.	EACH	SQ. YD.	CU. YD.
07567	HIGHWAY 45 OVER SCHOOL HOUSE BRANCH																			
		BENT 1					46.68		8.2	7,422	406	167	160	921		1,390.5			295	160
		BENT 2				285	78.54			10,918						1,777.5				
		BENT 3				199	77.30			10,718						1,777.5				
		BENT 4					46.68		8.2	7,422	406	160	97	921		1,390.5			476	257
		185'-0" CONTINUOUS W-BEAM UNIT						204.20	851.3		55,888			158,488	12.9		104	1		
		EXISTING BRIDGE NO. M3123 (SITE NO. 1)		1																
		TOTALS FOR BRIDGE NO. 07567		1		484	249.20	204.20	867.7	36,480	56,700	327	257	160,330	12.9	6,336.0	104	1	771	417
07568	HIGHWAY 45 OVER JOHNSON BRANCH																			
		BENT 1				28	14.00		8.2	1,466	397	95	75						239	133
		BENT 2				137	51.75			7,829						1,533.0				
		BENT 3				125	51.75			7,829						1,533.0				
		BENT 4				34	14.00		8.2	1,466	397	80	75						205	114
		175'-0" INTEGRAL W-BEAM UNIT						214.20	821.7		57,496			138,660	3.3			1		
		EXISTING BRIDGE NO. 00881 (SITE NO. 2)		1	110															
		TOTALS FOR BRIDGE NO. 07568		1	110	324 (1)	131.50	214.20	838.1	18,590	58,290	175	150	138,660	3.3	3,066.0		1	444	247
	(4)	EXISTING BRIDGE NO. M3124 (SITE NO. 3)		1																
TOTALS FOR JOB NO. 040792					110	808	380.70	418.40	1,705.8	55,070	114,990	502 (3)	407	298,990	16.2	9,402.0	104	2	1,215	664

(1) Includes approx. 101 Cu. Yd. of rock excavation.

(2) All steel piling shall be Grade 50 and are required to have QPL-approved driving points which will not be paid for directly, but will be considered subsidiary to the item "Steel Piling (HP 12x53)". All piles shall conform to Standard Drawing No. 55020.

(3) Quantity shown is for estimating and bidding purposes only. Actual quantity will be determined in the field.

(4) Existing Bridge No. M3124 is 28.3' wide (26.2' Roadway) and 69' long and consists of three precast channel beam unit spans supported by concrete columns on spread footings and concrete vertical wall abutments.

THOMAS GERARD
DESIGN SECTION SUPERVISOR

TABLE OF APPROACH SLAB QUANTITIES

(FOR INFORMATION ONLY)

BRIDGE NO.	ITEM	REINFORCING STEEL	CONCRETE
	UNIT	LB.	CU. YDS.
07567	Begin Bridge	8,183	65.50
	End Bridge	8,183	65.50
07568	Begin Bridge	7,152	59.21
	End Bridge	7,152	59.21

Charles R. Ellis
Digitally signed by Charles R. Ellis
Date: 2024.07.01 10:22:05'00'

STATE OF ARKANSAS
LICENSED PROFESSIONAL ENGINEER
No. 9235
7/1/24
CHARLES R. ELLIS

BRIDGE ENGINEER

SCHEDULE OF BRIDGE QUANTITIES
HWY. 45 STRS. & APPRS. (S)
SEBASTIAN COUNTY

ROUTE 45 SEC. I

ARKANSAS STATE HIGHWAY COMMISSION

LITTLE ROCK, ARK.

DRAWN BY: BAB DATE: 9/1/2021 FILENAME: b040792_q1.dgn
CHECKED BY: TMG DATE: 9/28/2021 SCALE: No Scale
DESIGNED BY: - DATE: -

BRIDGE NO. 07567 & 07568 DRAWING NO. 64502

PRINT DATE: 7/1/2024

SUMMARY OF QUANTITIES

	ITEM NUMBER	ITEM		QUANTITY	UNIT
	201	CLEARING		48	STATION
	201	GRUBBING		48	STATION
	202	REMOVAL AND DISPOSAL OF FENCE		6907	LIN. FT.
	202	REMOVAL AND DISPOSAL OF GATES		1	EACH
	202	REMOVAL AND DISPOSAL OF PIPE CULVERTS		10	EACH
	202	REMOVAL AND DISPOSAL OF GUARDRAIL		364	LIN. FT.
	202	REMOVAL AND DISPOSAL OF SIGNS		1	EACH
	SP, SS, & 210	UNCLASSIFIED EXCAVATION		31461	CU. YD.
	SP & 210	COMPACTED EMBANKMENT		28617	CU. YD.
	SP & 210	SOIL STABILIZATION		100	TON
	SP, SS, & 303	AGGREGATE BASE COURSE (CLASS 7)		12748	TON
	SS & 401	TACK COAT		3681	GAL.
	SP, SS, & 406	MINERAL AGGREGATE IN ACHM BINDER COURSE (1")		4412	TON
	SP, SS, & 406	ASPHALT BINDER (PG 64-22) IN ACHM BINDER COURSE (1")		208	TON
	SP, SS, & 407	MINERAL AGGREGATE IN ACHM SURFACE COURSE (1/2")		5035	TON
	SP, SS, & 407	ASPHALT BINDER (PG 64-22) IN ACHM SURFACE COURSE (1/2")		338	TON
	SP & 412	COLD MILLING ASPHALT PAVEMENT		1422	SQ. YD
	SP, SS, & 414	ASPHALT CONCRETE PATCHING FOR MAINTENANCE OF TRAFFIC		25	TON
	SP, SS, & 415	ACHM PATCHING OF EXISTING ROADWAY		25	TON
	SP, SS, & 504	APPROACH SLABS		249.42	CU. YD.
	SP, SS, & 504	APPROACH GUTTERS		33.60	CU. YD.
	601	MOBILIZATION		1.00	LUMP SUM
	SP & 602	FURNISHING FIELD OFFICE		1	EACH
	SS & 603	MAINTENANCE OF TRAFFIC		1.00	LUMP SUM
	603	18" TEMPORARY CULVERT		223	LIN. FT.
	603	24" TEMPORARY CULVERT		85	LIN. FT.
	603	57" X 38" TEMPORARY CULVERT		80	LIN. FT.
	SS & 604	SIGNS		772	SQ. FT.
	SP, SS, & 604	CONSTRUCTION PROJECT INFORMATION SIGN UPDATE		10	EACH
	SS & 604	BARRICADES		112	LIN. FT.
	SS & 604	TRAFFIC DRUMS		111	EACH
	SS & 604	FURNISHING AND INSTALLING PRECAST CONCRETE BARRIER		2032	LIN. FT.
	SS & 604	RELOCATING PRECAST CONCRETE BARRIER		1639	LIN. FT.
	604	CONSTRUCTION PAVEMENT MARKINGS		65455	LIN. FT.
	SS & 604	VERTICAL PANELS		111	EACH
	SP, SS, & 605	CONCRETE DITCH PAVING (TYPE B)		640	SQ. YD.
*	SS & 606	24" REINFORCED CONCRETE PIPE CULVERTS (CLASS V)	(ALTERNATE NO. 1)	64	LIN. FT.
*	SS & 606	24" ASPHALT COATED CORRUGATED STEEL PIPE CULVERTS (16 GAUGE)	(ALTERNATE NO. 2)	64	LIN. FT.
*	SS & 606	24" ALUMINUM COATED CORRUGATED STEEL PIPE CULVERTS (16 GAUGE)	(ALTERNATE NO. 3)	64	LIN. FT.
*	SS & 606	24" POLYMER PRECOATED METALLIC COATED CORRUGATED STEEL PIPE CULVERTS (16 GAUGE)	(ALTERNATE NO. 4)	64	LIN. FT.
*	SP, SS, & 606	24" HIGH DENSITY POLYETHYLENE PIPE	(ALTERNATE NO. 5)	64	LIN. FT.
*	SP, SS, & 606	24" PVC PIPE	(ALTERNATE NO. 6)	64	LIN. FT.
*	SP, SS, & 606	24" POLYPROPYLENE PIPE	(ALTERNATE NO. 7)	64	LIN. FT.
*	SS & 606	24" FLARED END SECTIONS FOR REINFORCED CONCRETE PIPE CULVERTS	(ALTERNATE NO. 1)	2	EACH
*	SS & 606	24" FLARED END SECTIONS FOR CORRUGATED STEEL PIPE CULVERTS	(ALTERNATE NO. 2)	2	EACH
	SP, SS, & 606	18" SIDE DRAIN		494	LIN. FT.
	SP, SS, & 606	48" SIDE DRAIN		152	LIN. FT.
	SS & 606	SELECTED PIPE BEDDING		50	CU. YD.
	SS & 611	UNDERDRAIN OUTLET PROTECTORS		10	EACH
	SS & 611	4" PIPE UNDERDRAINS		2500	LIN. FT.
	SS & 617	GUARDRAIL (TYPE A)		550	LIN. FT.
	SS & 617	GUARDRAIL TERMINAL (TYPE 2)		8	EACH
	SS & 617	THRIE BEAM GUARDRAIL TERMINAL		8	EACH
	SS & 619	WIRE FENCE (TYPE D)		5338	LIN. FT.
*	SS & 619	16' STEEL GATES	(ALTERNATE NO. 1)	1	EACH
*	SS & 619	16' ALUMINUM GATES	(ALTERNATE NO. 2)	1	EACH
	620	LIME		36	TON
	620	SEEDING		17.88	ACRE
	SS & 620	MULCH COVER		63.59	ACRE
	620	WATER		2761.5	M. GAL.
	621	TEMPORARY SEEDING		45.71	ACRE
	621	SILT FENCE		6393	LIN. FT.
	621	SAND BAG DITCH CHECKS		2244	BAG
	621	SEDIMENT BASIN		54	CU. YD.
	621	OBLITERATION OF SEDIMENT BASIN		54	CU. YD.
	621	SEDIMENT REMOVAL AND DISPOSAL		490	CU. YD.
	621	ROCK DITCH CHECKS		294	CU. YD.
	623	SECOND SEEDING APPLICATION		17.88	ACRE
	624	SOLID SODDING		466	SQ. YD.
	626	EROSION CONTROL MATTING (CLASS 3)		186	SQ. YD.
	635	ROADWAY CONSTRUCTION CONTROL		1.00	LUMP SUM
	637	MAILBOXES		7	EACH
	SS & 637	MAILBOX SUPPORTS (SINGLE)		7	EACH
	642	RUMBLE STRIPS IN ASPHALT SHOULDERS		6601	LIN. FT.
	719	THERMOPLASTIC PAVEMENT MARKING WHITE (6")		10455	LIN. FT.
	719	THERMOPLASTIC PAVEMENT MARKING WHITE (12")		11	LIN. FT.
	719	THERMOPLASTIC PAVEMENT MARKING YELLOW (6")		10530	LIN. FT.
	721	RAISED PAVEMENT MARKERS (TYPE II)		274	EACH
	SS & 731	TEMPORARY IMPACT ATTENUATION BARRIER		13	EACH
	SS & 731	TEMPORARY IMPACT ATTENUATION BARRIER (REPAIR)		13	EACH
	SS & 731	TEMPORARY IMPACT ATTENUATION BARRIER (RELOCATION)		1	EACH
	SS & 804	REINFORCING STEEL-ROADWAY (GRADE 60)		32350	POUND
	SS & 816	FILTER BLANKET		249	SQ. YD.
	SS & 816	DUMPED RIPRAP		125	CU. YD.
		STRUCTURES OVER 20' SPAN			
	205	REMOVAL OF EXISTING BRIDGE STRUCTURE (SITE NO. 1)		1.00	LUMP SUM
	205	REMOVAL OF EXISTING BRIDGE STRUCTURE (SITE NO. 2)		1.00	LUMP SUM
	205	REMOVAL OF EXISTING BRIDGE STRUCTURE (SITE NO. 3)		1.00	LUMP SUM
	603	TEMPORARY BRIDGE STRUCTURE (24' ROADWAY WIDTH)		110	LIN. FT.
	636	BRIDGE CONSTRUCTION CONTROL		1.00	LUMP SUM
	801	UNCLASSIFIED EXCAVATION FOR STRUCTURES-BRIDGE		808	CU. YD.
	801	UNCLASSIFIED EXCAVATION FOR STRUCTURES-ROADWAY		259	CU. YD.
	SP, SS, & 802	CLASS S CONCRETE-ROADWAY		643.95	CU. YD.
	SP, SS, & 802	CLASS S CONCRETE-BRIDGE		380.70	CU. YD.
	SP, SS, & 802	CLASS S(AE) CONCRETE-BRIDGE		418.40	CU. YD.
	SP & 803	CLASS 2 PROTECTIVE SURFACE TREATMENT		1705.8	SQ. YD.
	SS & 804	REINFORCING STEEL-ROADWAY (GRADE 60)		80033	POUND
	SS & 804	REINFORCING STEEL-BRIDGE (GRADE 60)		55070	POUND
	SS & 804	EPOXY COATED REINFORCING STEEL (GRADE 60)		114990	POUND
	SS & 805	STEEL PILING (HP 12X53)		502	LIN. FT.
	SS & 805	PREBORING		407	LIN. FT.
	SP, SS, & 807	STRUCTURAL STEEL IN BEAM SPANS (A709, GR. 50W)		298990	POUND
	SS & 807	PAINTING STRUCTURAL STEEL		16.2	TON
	SS & 808	ELASTOMERIC BEARINGS		9402.0	CU. IN.
	SS & 809	SILICONE JOINT SEALANT		104	LIN. FT.
	812	BRIDGE NAME PLATE (TYPE D)		2	EACH
	SS & 816	FILTER BLANKET		1215	SQ. YD.
	SS & 816	DUMPED RIPRAP		664	CU. YD.

* DENOTES ALTERNATE BID ITEMS.

REVISIONS

DATE	REVISION	SHEET NUMBER
9/6/2024	REMOVED SUPPLEMENTAL SPECIFICATIONS "CEMENT", "CEMENT", "CEMENT", AND "CEMENT". ADDED SUPPLEMENTAL SPECIFICATIONS "CEMENT TREATED BASE COURSE", "CEMENT STABILIZED CRUSHED STONE BASE COURSE", "PORTLAND CEMENT CONCRETE PAVEMENT", AND "CONCRETE FOR STRUCTURES". ADDED COLD MILLING STOCKPILE LOCATION. REVISED SPECIAL PROVISION "UTILITY ADJUSTMENTS".	3, 52, 55

STATE OF ARKANSAS
TIMOTHY D. SMITH
LICENSED PROFESSIONAL ENGINEER
No. 11425
09-06-2024

DATE REVISED	DATE FILED	DATE REVISED	DATE FILED
09/06/2024			

FED.RD. DIST.NO.	STATE	FED.AID PROJ.NO.	SHEET NO.	TOTAL SHEETS
6	ARK.		55	122

JOB NO. 040792

(2) SUMMARY OF QUANTITIES AND REVISIONS

SUMMARY OF QUANTITIES AND REVISIONS

DATE REVISED	DATE FILMED	DATE REVISED	DATE FILMED	FED.RD. DIST.NO.	STATE	FED.AID PROJ.NO.	SHEET NO.	TOTAL SHEETS
				6	ARK.			
				JOB NO.		040792	56	122

(2) SURVEY CONTROL DETAILS

STATE OF ARKANSAS
LICENSED PROFESSIONAL ENGINEER
No. 11425
TRINITY D. SMITH

08-15-2024

SURVEY CONTROL COORDINATES

Project Name: s040792
Date: 5/10/2019
Coordinate System: ARKANSAS STATE PLANE – NORTH ZONE BASED ON GPS CONTROL, 650030 – 650030A & 650031 – 650031A PROJECTED TO GROUND.

Units: U.S. SURVEY FOOT

Point Name	Northing	Easting	Elev	Feature	Description
1	270924.5320	609462.3538	608.99	CTL	ARDOT STD. MON. STAMPED PN:1
2	271502.7573	609777.2914	605.67	CTL	ARDOT STD. MON. STAMPED PN:2
3	272143.9683	609962.6675	606.39	CTL	ARDOT STD. MON. STAMPED PN:3
4	272713.3713	610261.4659	612.44	CTL	ARDOT STD. MON. STAMPED PN:4
5	287521.6870	604232.9320	540.92	CTL	ARDOT STD. MON. STAMPED PN:5
6	288221.8555	604273.5863	531.29	CTL	ARDOT STD. MON. STAMPED PN:6
7	288854.8403	604304.8282	529.68	CTL	ARDOT STD. MON. STAMPED PN:7
8	289696.0583	604344.9958	536.51	CTL	ARDOT STD. MON. STAMPED PN:8
9	292616.8001	604453.6649	541.73	CTL	ARDOT STD. MON. STAMPED PN:9
10	293444.0558	604492.0844	531.25	CTL	ARDOT STD. MON. STAMPED PN:10
11	294152.1625	604504.2943	536.51	CTL	ARDOT STD. MON. STAMPED PN:11
12	294890.1514	604395.6901	535.39	CTL	ARDOT STD. MON. STAMPED PN:12
100	273102.9501	610593.3270	606.79	GPS	ARDOT GPS #650030
101	274286.0353	611388.1386	610.77	GPS	ARDOT GPS #650030A
102	290369.9219	604336.1593	549.45	GPS	ARDOT GPS #650031
103	291903.3192	604461.3754	561.41	GPS	ARDOT GPS #650031A
900	272110.0770	609951.4248	608.08	TBM	CHISELED SQUARE NW CNR OF BR
901	288829.9890	604299.6270	530.76	TBM	CHISELED SQUARE NE CNR OF BR
902	293481.6304	604494.5502	532.72	TBM	CHISELED SQUARE SW CNR OF BR
903	294799.9256	604404.1827	536.26	TBM	CHISELED SQUARE CTR OF E HW

*Note – Rebar and Cap – Standard – 5/8" Rebar with 2" Aluminum Cap stamped
*(standard markings common to all caps), or as indicated
(other markings indicated in the point description of the individual point).
ALL DISTANCES ARE GROUND.
USE CAF = 1.0 FOR STAKEOUT FOR THIS PROJECT.
A PROJECT CAF OF 0.99995068975 HAS BEEN USED TO COMPUTE THE ABOVE GROUND COORDINATES.
THIS CAF IS INTENDED FOR USE WITHIN THE PROJECT LIMITS.
GRID DISTANCE = GROUND DISTANCE X CAF.
GRID COORDINATES ARE STORED UNDER FILE NAME s040792gi.CTL
HORIZONTAL DATUM: NAD 83 (2011)
VERTICAL DATUM: NAVD 88 POSITIONAL ACCURACY THIRD ORDER, UNLESS SPECIFIED OTHERWISE AT A SPECIFIC POINT.

REFERENCE POINTS (1500 SERIES) ARE TO BE USED TO ESTABLISH CONTROL IF THE PRIMARY CONTROL POINTS LISTED ABOVE HAVE BEEN DESTROYED.
REFERENCE POINTS ARE NOT TO BE USED FOR VERTICAL CONTROL

BASIS OF BEARING:
ARKANSAS STATE PLANE GRID BEARINGS – 0301–NORTH ZONE
DETERMINED FROM GPS CONTROL POINTS: 650030 – 650030A & 650031 – 650031A
CONVERGENCE ANGLE: 01 21 56.9290 LEFT AT PN:3 LT:35 03 28.7287 LG:094 20 49.7961
CONVERGENCE ANGLE: 01 22 39.3296 LEFT AT PN:7 LT:35 06 12.6182 LG:094 22 02.6620
CONVERGENCE ANGLE: 01 22 38.7912 LEFT AT PN:10 LT:35 06 58.0386 LG:094 22 01.7367
GRID AZIMUTH = ASTRONOMICAL AZIMUTH – CONVERGENCE ANGLE.

SITE 1 - NEW LOCATION

POINT NO.	TYPE	STATION	NORTHING	EASTING
8000	POB	99+00.00	270999.8664	609487.6624
8001	PI	100+00.00	271087.3284	609536.1434
8002	PC	101+71.49	271238.7200	609616.6962
8004	PT	103+36.49	271390.3394	609681.2632
8005	PC	111+36.50	272150.6947	609930.0304
8007	PT	114+34.28	272414.8253	610064.9022
8008	POE	122+22.03	273052.2601	610527.7424

SITE 2

POINT NO.	TYPE	STATION	NORTHING	EASTING
8009	POB	300+00.00	287716.1200	604225.4203
8010	PI	307+61.66	288476.6038	604267.7313
8011	PI	318+55.98	289569.58D34	604321.7914
8031	POE	320+30.11	289743.4908	604330.7474

SITE 3

POINT NO.	TYPE	STATION	NORTHING	EASTING
8012	POB	500+00.00	292765.0313	604477.8408
8013	PI	503+83.64	293148.1917	604497.0069
8014	PC	510+22.24	293786.0788	604527.1385
8016	PT	512+48.00	294010.4932	604508.9525
8017	POE	515+14.99	294271.6740	604453.5779

SITE 1 DETOUR

POINT NO.	TYPE	STATION	NORTHING	EASTING
8000	POB	599+00.10	270999.8664	609487.6624
8041	PI	600+65.15	271146.1742	609564.0560
8042	PC	601+71.60	271240.1671	609614.0357
8044	PT	603+36.22	271391.4362	609678.4419
8045	PI	604+99.56	271546.6781	609729.2564
8046	PI	606+64.59	271702.5654	609783.4149
8047	PI	609+99.59	272020.9579	609887.5841
8048	PC	611+86.58	272198.6781	609945.7292
8050	PT	615+43.91	272515.6349	610107.5754
8051	PI	617+02.99	272644.3539	610201.0380
8052	POE	622+13.58	273042.5272	610520.6754

SITE 2 DETOUR

POINT NO.	TYPE	STATION	NORTHING	EASTING
8100	POB	396+17.96	287595.5885	604218.5727
8101	PC	397+43.86	287721.2921	604225.5664
8103	PT	403+99.43	288376.5013	604224.4984
8104	PC	404+63.74	288440.7092	604220.7161
8106	PT	405+57.62	288534.5350	604220.3837
8107	PC	409+87.42	288963.7621	604242.6177
8109	PT	410+80.56	289056.3218	604252.5235
8110	PC	412+59.82	289233.2542	604281.3448
8112	PT	416+80.08	289650.9194	604325.9801
8031	POE	417+72.77	289743.4908	604330.7474

SITE 3 DETOUR

POINT NO.	TYPE	STATION	NORTHING	EASTING
8012	POB	700+00.00	292765.0313	604477.8408
8113	PC	702+86.72	293051.3929	604492.1649
8115	PT	704+16.14	293180.2022	604483.3141
8116	PC	704+75.95	293238.9698	604472.1833
8118	PT	706+03.85	293366.2650	604463.2589
8119	PC	708+03.97	293566.1646	604472.7014
8121	PT	709+24.56	293685.0112	604491.5996
8122	PC	709+75.83	293734.4518	604505.1862
8124	PT	712+36.17	293992.2216	604512.8264
8017	POE	715+21.84	294271.6740	604453.5779

be42315 8/9/2024
R040792.DGN

SURVEY CONTROL DETAILS

DATE REVISED	DATE FILMED	DATE REVISED	DATE FILMED	FED.RD. DIST.NO.	STATE	FED.AID PROJ.NO.	SHEET NO.	TOTAL SHEETS
				6	ARK.			
				JOB NO.		040792	57	122

(2) SURVEY CONTROL DETAILS

STATE OF ARKANSAS
LICENSED PROFESSIONAL ENGINEER
No. 11425
TRINITY D. SMITH
Trinity D. Smith
08-15-2024

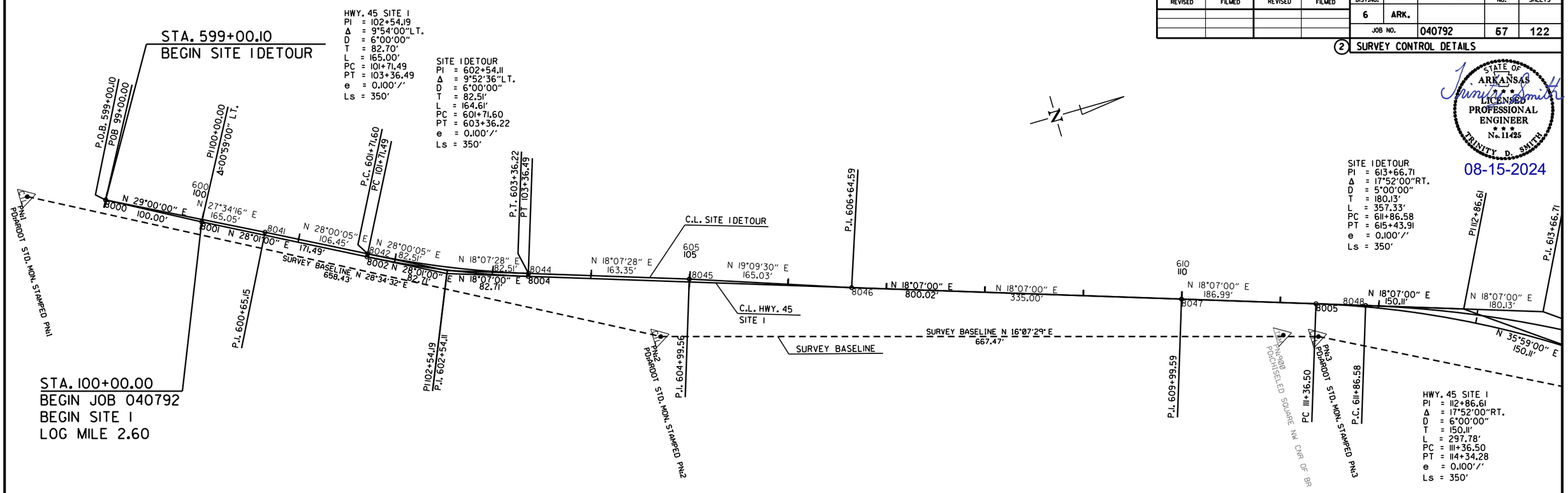

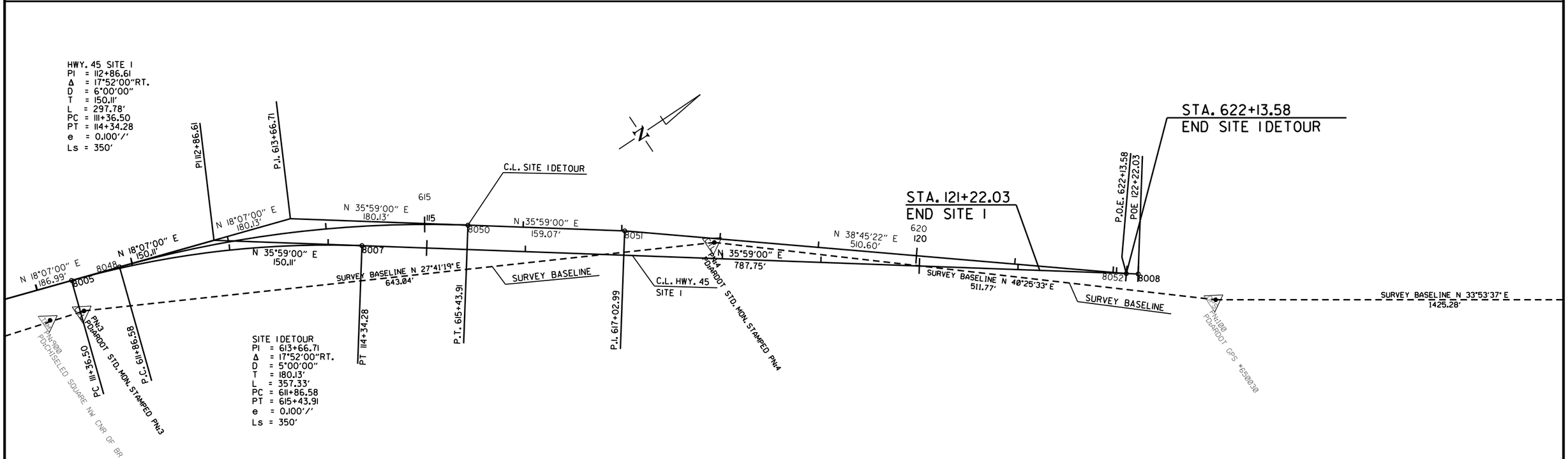

SITE I
SURVEY CONTROL DETAILS

BA42315 6/27/2024
R040792.DGN

DATE REVISED	DATE FILMED	DATE REVISED	DATE FILMED

FED.RD. DIST.NO.	STATE	FED.AID PROJ.NO.	SHEET NO.	TOTAL SHEETS
6	ARK.			
JOB NO.		040792	68	122

(2) SURVEY CONTROL DETAILS

STATE OF ARKANSAS
LICENSED PROFESSIONAL ENGINEER
No. 11425
TRINITY D. SMITH
Trinity Smith
08-15-2024

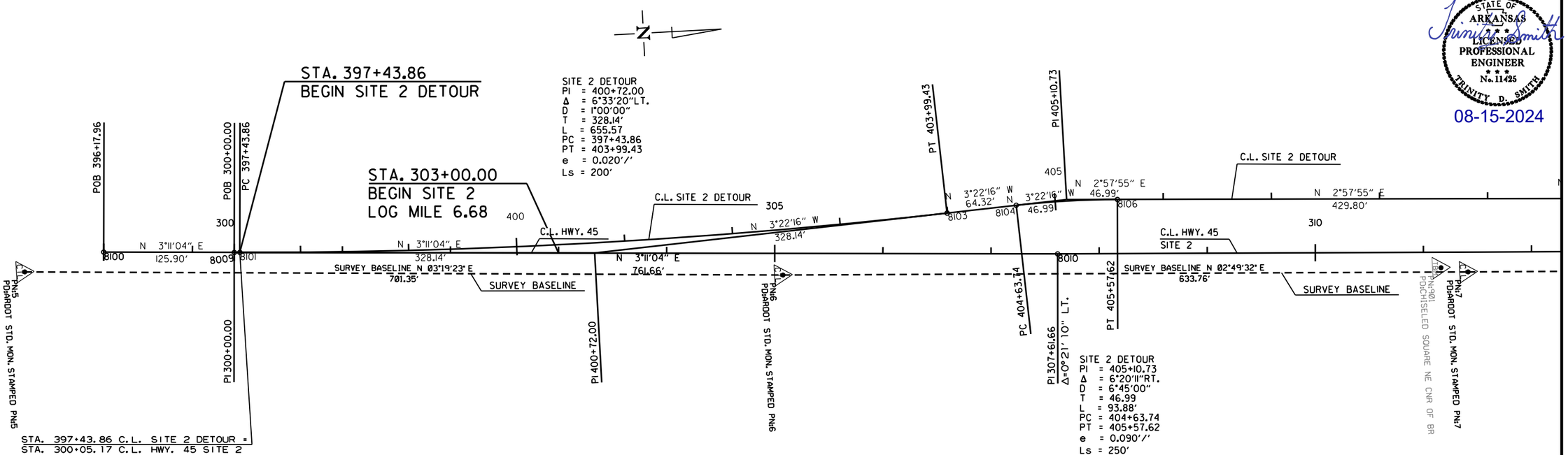

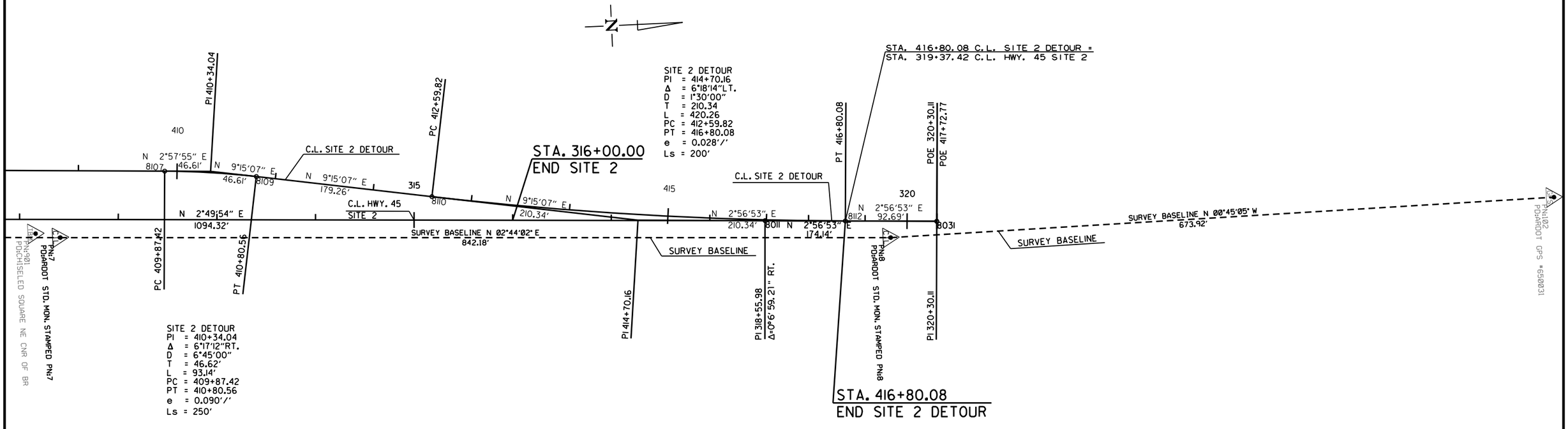

BA42315 6/27/2024
R040792.DGN

SITE 2
SURVEY CONTROL DETAILS

DATE REVISED	DATE FILMED	DATE REVISED	DATE FILMED

FED.RD. DIST.NO.	STATE	FED.AID PROJ.NO.	SHEET NO.	TOTAL SHEETS
6	ARK.			
JOB NO.		040792	59	122

(2) SURVEY CONTROL DETAILS

STATE OF ARKANSAS
LICENSED PROFESSIONAL ENGINEER
No. 11425
TRINITY D. SMITH

08-15-2024

HWY. 45 SITE 3 DETOUR
PI = 703+51.73
Δ = 13°35'19"LT.
D = 10°30'00"
T = 65.01'
L = 129.42'
PC = 702+86.72
PT = 704+16.14
e = 0.100'/'
Ls = 300'
SUPER. ROTATED ABOUT C.L.

HWY. 45 SITE 3 DETOUR
PI = 705+40.19
Δ = 13°25'46"RT.
D = 10°30'00"
T = 64.24'
L = 127.90'
PC = 704+75.95
PT = 706+03.85
e = 0.100'/'
Ls = 300'
SUPER. ROTATED ABOUT C.L.

HWY. 45 SITE 3
PI = 511+35.74
Δ = 14°40'29"LT.
D = 6°30'00"
T = 113.50'
L = 225.76'
PC = 510+22.24
PT = 512+48.00
e = 0.010'/'
Ls = 350'

HWY. 45 SITE 3 DETOUR
PI = 711+08.53
Δ = 27°20'11"LT.
D = 10°30'00"
T = 132.70'
L = 260.35'
PC = 709+75.83
PT = 712+36.17
e = 0.100'/'
Ls = 300'
SUPER. ROTATED ABOUT C.L.

STA. 702+86.72
BEGIN SITE 3 DETOUR

STA. 513+75.00
END SITE 3
END JOB 040792

STA. 501+00.00
BEGIN SITE 3
LOG MILE 7.54

STA. 712+20.31
END SITE 3 DETOUR

HWY. 45 SITE 3 DETOUR
PI = 708+64.51
Δ = 12°39'41"RT.
D = 10°30'00"
T = 60.54'
L = 120.58'
PC = 708+03.97
PT = 709+24.56
e = 0.100'/'
Ls = 300'
SUPER. ROTATED ABOUT C.L.

B442315 6/27/2024
R040792.DGN

SITE 3
SURVEY CONTROL DETAILS

DATE REVISED	DATE FILMED	DATE REVISED	DATE FILMED	FED.RD. DIST.NO.	STATE	FED.AID PROJ.NO.	SHEET NO.	TOTAL SHEETS
				6	ARK.			
				JOB NO.		040792	60	122

(2) PLAN AND PROFILE SHEETS

STA. 100+90 IN PLACE
18" X 30' CP PIPE CULVERT
LT. SIDE DRAIN
REMOVE AND INSTALL
18" X 32' PIPE CULVERT
LT. SIDE DRAIN
CONSTRUCT APPROACH = 40 CU. YDS. COMP. EMB.

+00.00 — 100' TRANSITION — +00.00

STA. 101+67 IN PLACE
18" X 32' PIPE CULVERT
REMOVE AND CONSTRUCT
24" X 63' PIPE CULVERT
W/ FES LT. AND RT.
24" R.C. PIPE CULVERT (CLASS V)(TYPE 3 BED.) = 64 LIN. FT.
24" ASPH. COATED CSP (TYPE 2 BED.) = 64 LIN. FT.
24" ALUM. COATED CSP (TYPE 2 BED.) = 64 LIN. FT.
24" POLY. COATED CSP. (TYPE 2 BED.) = 64 LIN FT.
24" HDPE (TYPE 2 BED.) = 64 LIN. FT.
24" PVC (TYPE 2 BED.) = 64 LIN. FT.
Q25 = 8.7 CFS, D.A. = 6.07 ACRES

STA. 103+18 IN PLACE
15" X 20' CM PIPE CULVERT
LT. SIDE DRAIN
REMOVE AND INSTALL
18" X 32' PIPE CULVERT
LT. SIDE DRAIN
CONSTRUCT APPROACH = 50 CU. YDS. COMP. EMB.
10 CU. YDS. UNCL. EXC.

HWY. 45 SITE 1
PI = 102+54.19
Δ = 9°54'00"LT.
D = 6°00'00"
T = 82.70'
L = 165.00'
PC = 101+71.49
PT = 103+36.49
e = 0.100'/'
Ls = 350'

STA. 107+35 IN PLACE
16" X 24' CM PIPE CULVERT
LT. SIDE DRAIN
REMOVE AND INSTALL
18" X 42' PIPE CULVERT
LT. SIDE DRAIN
CONSTRUCT APPROACH = 135 CU. YDS. COMP. EMB.
5 CU. YDS. UNCL. EXC.

STA. 109+53 - STA. 110+20 IN PLACE
60' X 28.2' BRIDGE NO. M3123
REMOVE AS EXISTING BRIDGE STRUCTURE
(SITE NO. 1) = 1.00 LUMP SUM

STA. 109+30.97 BRIDGE END
BRIDGE NO. 07567
185'-0" CONTINUOUS W-BEAM UNIT
(3 SPANS @ 60'-65'-60')
34'-0" CLEAR ROADWAY
188'-3/4" TOTAL BRIDGE LENGTH
STA. 111+19.03 BRIDGE END

STATE OF ARKANSAS
TRINITY D. SMITH
LICENSED PROFESSIONAL ENGINEER
No. 11425
08-15-2024

STA. 100+00.00
BEGIN JOB 040792
BEGIN SITE 1
LOG MILE 2.60

STA.	STA.	SIDE	GUARDRAIL (TYPE A) LIN. FT.	GUARDRAIL TERMINAL (TYPE 2) EACH	THRIE BEAM GUARDRAIL TERMINAL EACH
108+10.38	109+04.13	LT.	25	1	1
108+45.63	109+39.38	RT.	25	1	1
111+10.62	112+54.37	LT.	75	1	1
111+44.77	112+38.52	RT.	25	1	1

STA. 103+95 CONSTRUCT
APPROACH ON RT. = 25 CU. YDS.

STA. 106+08 INSTALL
18" X 32' PIPE CULVERT
RT. SIDE DRAIN
CONSTRUCT APPROACH ON RT. = 120 CU. YDS.

STA. 107+00 INSTALL
18" X 30' PIPE CULVERT
RT. SIDE DRAIN
CONSTRUCT APPROACH ON RT. = 90 CU. YDS.

STA. 108+16
18" X 34' PIPE CULVERT
RT. SIDE DRAIN
CONSTRUCT APPROACH ON RT. = 65 CU. YDS.

BEGIN BRIDGE
STA. 109+30.97
ELEVATION 611.28

END BRIDGE
STA. 111+19.03
ELEVATION 611.01

HWY. 45 SITE 1
PI = 112+86.61
Δ = 17°52'00"RT.
D = 6°00'00"
T = 150.11'
L = 297.78'
PC = 111+36.50
PT = 114+34.28
e = 0.100'/'
Ls = 350'

REFER TO SURVEY CONTROL DETAIL SHEETS FOR HORIZONTAL AND VERTICAL CONTROL DATA.

STA. 100+00.00 BEGIN SUPERELEVATION
STA. 102+53.99 MAX SUPERELEVATION (0.073 '/')
STA. 106+03.99 END SUPERELEVATION

FOR ALL THE CONSTRUCTION OF TEMPORARY WORK RAMPS OR HAUL ROADS, THIS STREAM IS CLASSIFIED AS A PERENNIAL STREAMBANK ELEVATION IS 596 FT. M.L.S. BETWEEN STA. 109+80 AND STA. 110+15 REFER TO SECTION 110.05 (C) OF THE 2014 STANDARD SPECIFICATIONS

STA. 111+35.00 BEGIN SUPERELEVATION
STA. 112+85.39 MAX SUPERELEVATION (0.043 '/')
STA. 113+46.78 MAX SUPERELEVATION (0.043 '/')
STA. 116+96.78 END SUPERELEVATION

P.V.I. 100+00.00 ELEV. 607.90
P.V.C. 100+13.17 ELEV. 607.70
-1.48%
100+67.00 603.91 (LT.)
K=116.48 VC=205' e=0.45'
P.V.I. 101+15.67 ELEV. 606.19
101+47.00 602.40 (RT.)
LT. DT. GD. -1.20%
101+67.00 602.20 (RT.)
RT. DT. GD. 0.20%
101+67.00 602.71 (LT.)
101+87.00 602.24 (RT.)
RT. DT. GD. -1.00%
102+67.00 603.30 (LT.)
LT. DT. GD. 0.59%
P.V.T. 102+18.17 ELEV. 606.47
0.28%
P.V.C. 102+67.23 ELEV. 606.61
P.V.I. 103+64.73 ELEV. 606.88
K=354.55 VC=195' e=0.13'
104+00.00 604.07 (LT.)
LT. DT. GD. 0.43%
P.V.T. 104+62.23 ELEV. 607.69
105+00.00 604.50 (LT.)
LT. DT. GD. 0.21%
105+65.00 605.92 (RT.)
RT. DT. GD. -1.40%
106+00.00 605.71 (LT.)
106+15.00 605.22 (RT.)
LT. DITCH GRADE -0.20%
RT. DITCH GRADE -0.01%
P.V.C. 108+16.80 ELEV. 610.64
0.83%
108+05.00 605.21 (RT.)
108+10.00 605.28 (LT.)
108+25.00 605.06 (RT.)
RT. DITCH GRADE -0.01%
P.V.I. 109+91.80 ELEV. 612.09
K=213.41 VC=350' e=-0.72'
109+47.97 605.05 (RT.)
ELEV. CUT TO 600.00'
Q25 DESIGN HIGH WATER 605.60
P.V.T. 111+66.80 ELEV. 610.67
111+36.00 606.60 (RT.)
RT. DITCH GRADE -1.91%
111+02.00 596.70 (LT.)
LT. DT. GD. 3.81%
111+60.00 598.91 (LT.)
-0.81%
P.V.C. 112+95.58 ELEV. 609.63
112+33.00 604.75 (RT.)
RT. DT. GD. -1.53%

630 625 620 615 610 605 600 595 590 585

98+00 99+00 100+00 101+00 102+00 103+00 104+00 105+00 106+00 107+00 108+00 109+00 110+00 111+00 112+00 113+00

RD38049 8/6/2024
R040792.DGN

HWY. 45 SITE 1

DATE REVISED	DATE FILMED	DATE REVISED	DATE FILMED

FED.RD. DIST.NO.	STATE	FED.AID PROJ.NO.	SHEET NO.	TOTAL SHEETS
6	ARK.			
JOB NO.		040792	61	122

(2) PLAN AND PROFILE SHEETS

STATE OF ARKANSAS
LICENSED PROFESSIONAL ENGINEER
No. 11425
TRINITY D. SMITH
Trinity D. Smith
08-15-2024

REMOVAL AND DISPOSAL OF FENCE

STA.	STA.	SIDE	LIN. FT.
100+99	103+01	LT.	227
101+30	103+88	RT.	315
103+19	104+85	LT.	275
104+04	104+13	RT.	17
104+85	107+25	LT.	260
107+42	109+58	LT.	231
108+87	120+05	LT.	1173
109+70	110+44	RT.	74
111+15	111+57	RT.	49
113+37	120+09	RT.	671
120+29	121+22	LT.	109

+22.03 100' TRANSITION +22.03

STA. 120+17 CONSTRUCT APPROACH ON LT. = 5 CU. YDS.

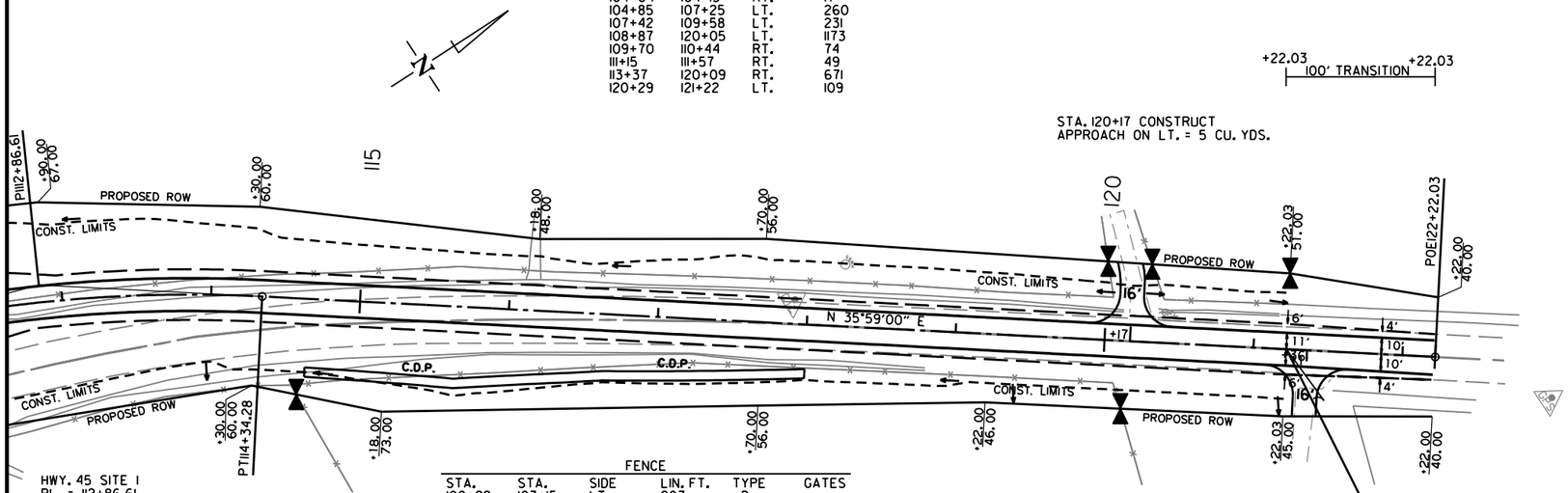

HWY. 45 SITE 1
PI = 112+86.61
Δ = 17°52'00"RT.
D = 6°00'00"
T = 150.11'
L = 297.78'
PC = 111+36.50
PT = 114+34.28
e = 0.100'/'
Ls = 350'

FENCE

STA.	STA.	SIDE	LIN. FT.	TYPE	GATES
100+99	103+15	LT.	207	D	
101+30	103+46	RT.	212	D	
103+47	106+27	LT.	283	D	
104+96	105+01	RT.	5	D	
106+51	107+23	LT.	77	D	
107+47	108+50	LT.	125	D	
109+00	120+00	LT.	1125	D	
113+37	120+13	RT.	673	D	
120+29	121+22	LT.	93	D	

STA. 121+22.03
END SITE 1

REFER TO SURVEY CONTROL DETAIL SHEETS FOR HORIZONTAL AND VERTICAL CONTROL DATA.

HWY. 45 SITE 1

STA. 111+35.00 BEGIN SUPERELEVATION
STA. 112+85.39 MAX SUPERELEVATION (0.043 '/')
STA. 113+46.78 MAX SUPERELEVATION (0.043 '/')
STA. 116+96.78 END SUPERELEVATION

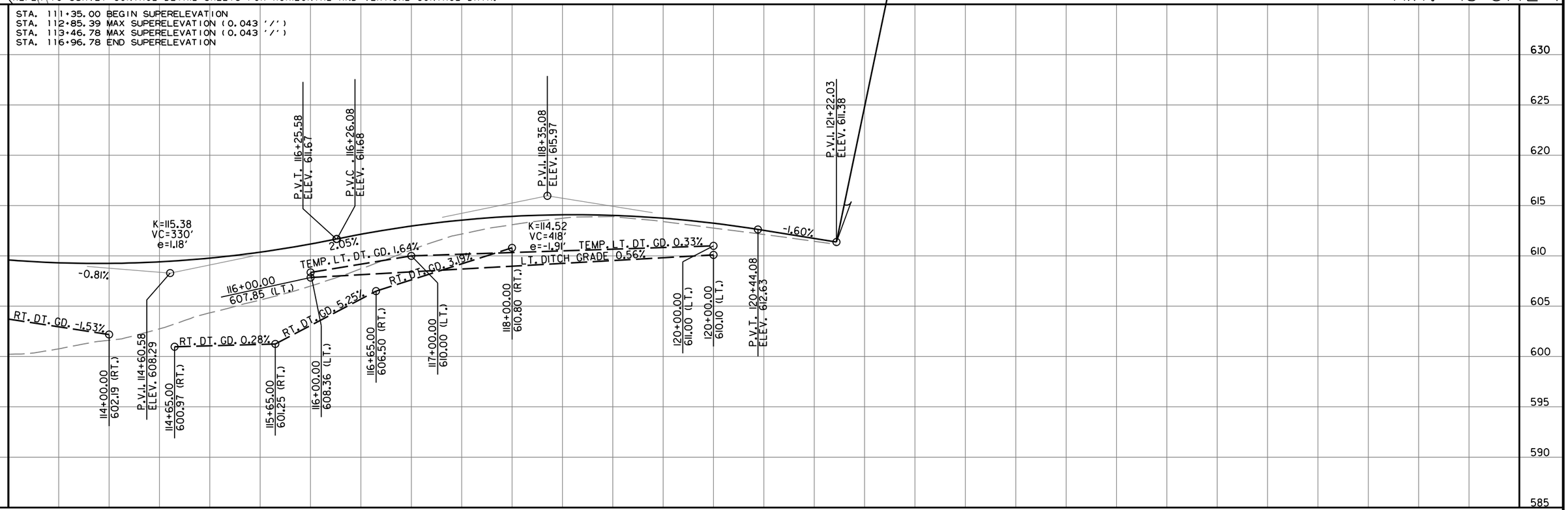

RD38049 8/6/2024
R040792.DGN

DATE REVISED	DATE FILMED	DATE REVISED	DATE FILMED	FED.RD. DIST.NO.	STATE	FED.AID PROJ.NO.	SHEET NO.	TOTAL SHEETS
				6	ARK.			
				JOB NO.		040792	62	122

2 PLAN AND PROFILE SHEETS

GUARDRAIL

STA.	STA.	SIDE	GUARDRAIL (TYPE A) LIN. FT.	GUARDRAIL TERMINAL (TYPE 2) EACH	THRIE BEAM GUARDRAIL TERMINAL EACH
307+38.75	309+57.50	RT.	150	1	1
308+38.75	309+57.50	LT.	50	1	1
311+53.50	312+72.25	RT.	50	1	1
311+53.50	313+72.25	LT.	150	1	1

STA. 309+86 - STA. 311+15.52 IN PLACE
135' X 25' BRIDGE NO. 00881
REMOVE AS EXISTING BRIDGE STRUCTURE
(SITE NO. 2) = 1.00 LUMP SUM

STA. 309+67.50 BRIDGE END
BRIDGE NO. 07568
175'-0" INTEGRAL CONTINUOUS
W-BEAM UNIT (3 SPANS @ 55'-65'-55')
34'-0" CLEAR ROADWAY
176'-0" TOTAL BRIDGE LENGTH
STA. 311+43.50 BRIDGE END

STA. 314+96 IN PLACE
DBL. 48" X 40' CM PIPE CULVERT
LT. SIDE DRAIN
REMOVE AND INSTALL
DBL. 48" X 76' PIPE CULVERT
LT. SIDE DRAIN
CONSTRUCT TURNOUT = 245 CU. YDS.

FENCE

STA.	STA.	SIDE	LIN. FT.	TYPE	GATES
303+00	304+31	RT.	133	D	
304+83	308+72	RT.	390	D	
311+05	313+43	RT.	239	D	
313+45	313+61	RT.			
315+22	316+00	LT.	132	D	
315+44	315+68	RT.	22	D	

REMOVAL AND DISPOSAL OF FENCE

STA.	STA.	SIDE	LIN. FT.	GATES
303+00	304+31	RT.	133	
304+83	308+72	RT.	411	
310+98	312+22	RT.	175	
312+38	313+45	RT.	159	
313+45	313+60	RT.		
313+60	315+25	RT.	267	
315+44	315+68	RT.	53	
315+24	316+00	LT.	283	

STATE OF ARKANSAS
LICENSED PROFESSIONAL ENGINEER
No. 11425
TRINITY D. SMITH
08-15-2024

STA. 303+00.00
BEGIN SITE 2
LOG MILE 6.68

STA. 304+55 IN PLACE
18" X 40' CP PIPE CULVERT
RT. SIDE DRAIN
REMOVE AND INSTALL
18" X 46' PIPE CULVERT
RT. SIDE DRAIN
CONSTRUCT APPROACH = 150 CU. YDS.

BEGIN BRIDGE
STA. 309+67.50
ELEVATION 533.55

END BRIDGE
STA. 311+43.50
ELEVATION 533.55

STA. 313+53 INSTALL
18" X 42' PIPE CULVERT
RT. SIDE DRAIN
CONSTRUCT APPROACH = 95 CU. YDS.

STA. 316+00.00
END SITE 2

STA. 315+35 CONST
APPROACH ON RT. = 30 CU. YDS.

REFER TO SURVEY CONTROL DETAIL SHEETS FOR HORIZONTAL AND VERTICAL CONTROL DATA.

HWY. 45 SITE 2

FOR ALL THE CONSTRUCTION OF TEMPORARY WORK RAMPS OR HAUL ROADS, THIS STREAM IS CLASSIFIED AS A PERENNIAL STREAMBANK ELEVATION IS 522 FT. M.L.S. BETWEEN STA. 310+45 AND STA. 310+85 REFER TO SECTION 110.05 (C) OF THE 2014 STANDARD SPECIFICATIONS

P.V.I. 303+00.00 ELEV. 536.20
P.V.C. 305+45.00 ELEV. 533.26
P.V.T. 307+55.00 ELEV. 532.65
P.V.C. 308+50.00 ELEV. 533.24
P.V.I. 309+00.00 ELEV. 533.55
P.V.T. 309+50.00 ELEV. 533.55
P.V.C. 311+50.00 ELEV. 533.55
P.V.I. 312+00.00 ELEV. 533.55
P.V.C. 313+27.00 ELEV. 533.33
P.V.T. 314+27.00 ELEV. 533.56
P.V.I. 316+00.00 ELEV. 534.63
P.V.I. 306+50.00 ELEV. 532.00
P.V.I. 313+77.00 ELEV. 533.25
P.V.T. 312+50.00 ELEV. 533.47

K=115.38 VC=210' e=0.48'
K=161.29 VC=100' e=-0.08'
K=588.24 VC=100' e=-0.02'
K=126.85 VC=100' e=0.10'

-1.20% 0.62% 0.00% -0.17% 0.62%

LT. D. G. -1.03% RT. D. G. -0.69% LT. D. G. 1.49% RT. D. G. 2.32%

Q25 DESIGN HIGH WATER 528.00
ELEV. CUT TO 524.00'

306+80.87 525.96 (RT.)
306+80.87 525.96 (LT.)
309+67.00 524.00 (RT.)
309+67.00 523.00 (LT.)
311+43.50 522.00 (RT.)
311+43.50 525.00 (LT.)
313+52.36 526.85 (RT.)
313+54.00 528.14 (LT.)

570 560 550 540 530 520 510 500 490

302+00 303+00 304+00 305+00 306+00 307+00 308+00 309+00 310+00 311+00 312+00 313+00 314+00 315+00 316+00 317+00

RD38049 8/6/2024
R040792.DGN

DATE REVISED	DATE FILMED	DATE REVISED	DATE FILMED	FED.RD. DIST.NO.	STATE	FED.AID PROJ.NO.	SHEET NO.	TOTAL SHEETS
				6	ARK.			
				JOB NO.		040792	63	122

(2) PLAN AND PROFILE SHEETS

STA. 301+74 IN PLACE
18" LT. SIDE DRAIN
RETAIN AND CONSTRUCT
TEMPORARY APPROACH
ON RT. = 10 CU. YDS.

HWY. 45 SITE 2 DETOUR
PI = 400+72.00
Δ = 6°33'20"LT.
D = 1°00'00"
T = 328.14'
L = 655.57
PC = 397+43.86
PT = 403+99.43
e = 0.020'/'
Ls = 200'

STA. 397+43.86 C.L. SITE 2 DETOUR =
STA. 300+05.17 C.L. HWY. 45 SITE 2

CONSTRUCT 24' X 110' TEMPORARY BRIDGE
FROM STA. 407+51.00 TO STA. 408+61.00
SEE BRIDGE STANDARD DRAWINGS
55050-55057 FOR DETAILS

JOHNSON BRANCH

STA 314+96 INSTALL
DBL. 59" X 36" TEMP. ARCH PIPES
LT. SIDE DRAIN AND
CONSTRUCT TEMP. APPROACH
= 85 CU. YDS.

SFHA BOUNDARY

SPECIAL FLOOD HAZARD AREA

50' BUFFER

PROPOSED TCE

PROPOSED ROW

DETOUR CONST. LIMITS

POB300+00.00

PC397+43.86

PI300+00.00

PI400+72.00

PT403+99.43

PI405+10.73

PC404+63.74

PI307+61.66

Δ=0°21'10" LT.

PI410+34.04

PT410+80.56

PC409+87.42

T.C.E.

N 3°22'16" W

N 3°11'04" E

N 2°57'55" E

N 9°15'07" E

N 2149'54" E

HWY. 45 SITE 2 DETOUR
PI = 405+10.73
Δ = 6°20'11"RT.
D = 6°45'00"
T = 46.99
L = 93.88'
PC = 404+63.74
PT = 405+57.62
e = 0.090'/'
Ls = 250'

HWY. 45 SITE 2 DETOUR
PI = 410+34.04
Δ = 6°17'12"RT.
D = 6°45'00"
T = 46.62'
L = 93.14'
PC = 409+87.42
PT = 410+80.56
e = 0.090'/'
Ls = 250'

STA. 397+43.86
BEGIN SITE 2 DETOUR

DETOUR SITE 2

555 REFER TO SURVEY CONTROL DETAIL SHEETS FOR HORIZONTAL AND VERTICAL CONTROL DATA. 555

STATE OF ARKANSAS
LICENSED PROFESSIONAL ENGINEER
No. 11425
TRINITY D. SMITH
08-15-2024

STA. 402+72.00 BEGIN SUPERELEVATION (R.C.)
STA. 403+99.43 END SUPERELEVATION

STA. 403+99.43 BEGIN SUPERELEVATION
STA. 405+10.43 MAX SUPERELEVATION (0.040 '/')
STA. 405+29.87 MAX SUPERELEVATION (0.040 '/')
STA. 406+40.87 END SUPERELEVATION

STA. 409+01.17 BEGIN SUPERELEVATION
STA. 410+16.17 MAX SUPERELEVATION (0.041 '/')
STA. 410+34.00 MAX SUPERELEVATION (0.041 '/')
STA. 411+49.00 END SUPERELEVATION

STA. 411+49.00 BEGIN SUPERELEVATION
STA. 412+57.00 END SUPERELEVATION (R.C.)

P.V.I. 402+23.40
ELEV. 532.97

-0.71%

P.V.C. 406+20.00
ELEV. 530.14

K=154.93
VC=110'
e=0.10'

P.V.I. 406+75.00
ELEV. 529.75

P.V.T. 407+30.00
ELEV. 529.75

0.00%

P.V.C. 408+90.00
ELEV. 529.75

P.V.I. 409+70.00
ELEV. 529.75

K=87.43
VC=160'
e=0.37'

P.V.T. 410+50.00
ELEV. 531.22

1.83%

P.V.C. 411+40.00
ELEV. 532.87

K=73.17
VC=120'
e=-0.25'

P.V.I. 412+00.00
ELEV. 533.97

550 545 540 535 530 525 520 515 510 505

397+00 398+00 399+00 400+00 401+00 402+00 403+00 404+00 405+00 406+00 407+00 408+00 409+00 410+00 411+00 412+00

RD38049 8/6/2024
R040792.DGN

DATE REVISED	DATE FILMED	DATE REVISED	DATE FILMED

FED.RD. DIST.NO.	STATE	FED.AID PROJ.NO.	SHEET NO.	TOTAL SHEETS
6	ARK.			
JOB NO.		040792	64	122

(2) PLAN AND PROFILE SHEETS

STATE OF ARKANSAS
LICENSED PROFESSIONAL ENGINEER
No. 11425
TRINITY D. SMITH

Trinity D. Smith

08-15-2024

STA 314+96 INSTALL
DBL. 57" X 38" X 40' TEMP. ARCH PIPES
LT. SIDE DRAIN AND
CONSTRUCT TEMP. APPROACH
= 85 CU. YDS.

HWY. 45 SITE 2 DETOUR
PI = 414+70.16
Δ = 6°18'14"LT.
D = 1°30'00"
T = 210.34
L = 420.26
PC = 412+59.82
PT = 416+80.08
e = 0.028'/'
Ls = 200'

REMOVAL AND DISPOSAL OF FENCE

STA.	STA.	SIDE	LIN. FT.	GATES
303+00	304+31	RT.	133	
304+83	308+72	RT.	411	
310+98	312+22	RT.	175	
312+38	313+45	RT.	159	
313+45	313+60	RT.		1
313+60	315+25	RT.	267	
315+44	315+68	RT.	53	
315+24	316+00	LT.	283	

FENCE

STA.	STA.	SIDE	LIN. FT.	TYPE	GATES
303+00	304+31	RT.	133	D	
304+83	308+72	RT.	390	D	
311+05	313+43	RT.	239	D	
313+45	313+61	RT.			1
315+22	316+00	LT.	132	D	
315+44	315+68	RT.	22	D	

STA. 416+80.08 C.L. SITE 2 DETOUR =
STA. 319+37.42 C.L. HWY. 45 SITE 2

STA. 416+80.08
END SITE 2 DETOUR

DETOUR SITE 2

REFER TO SURVEY CONTROL DETAIL SHEETS FOR HORIZONTAL AND VERTICAL CONTROL DATA.

STA. 409+01.17 BEGIN SUPERELEVATION
STA. 410+16.17 MAX SUPERELEVATION (0.041 '/')
STA. 410+34.00 MAX SUPERELEVATION (0.041 '/')
STA. 411+49.00 END SUPERELEVATION
STA. 411+49.00 BEGIN SUPERELEVATION
STA. 412+57.00 END SUPERELEVATION (R.C.)

P.V.I. 412+00.00
ELEV. 533.97
0.20%
P.V.I. 413+95.36
ELEV. 534.36
K=73.62
VC=120'
e=-0.24'
P.V.T. 412+60.00
ELEV. 534.09

R038049 8/6/2024
R040792.DGN

DATE REVISED	DATE FILMED	DATE REVISED	DATE FILMED	FED.RD. DIST.NO.	STATE	FED.AID PROJ.NO.	SHEET NO.	TOTAL SHEETS
				6	ARK.			
				JOB NO.		040792	65	122

(2) PLAN AND PROFILE SHEETS

STATE OF ARKANSAS
TRINITY D. SMITH
LICENSED PROFESSIONAL ENGINEER
No. 11425
08-15-2024

STA. 502+76 IN PLACE
18" X 46' RC PIPE CULVERT
LT. SIDE DRAIN
REMOVE AND INSTALL
18" X 48' PIPE CULVERT
LT. SIDE DRAIN
CONSTRUCT APPROACH = 180 CU. YDS.

STA. 507+16 - STA. 507+86 IN PLACE
69' X 28' BRIDGE NO. M3124
REMOVE AS EXISTING BRIDGE STRUCTURE
(SITE NO. 3) = 1.00 LUMP SUM

SPECIAL FLOOD HAZARD AREA

REMOVAL AND DISPOSAL OF FENCE

STA.	STA.	SIDE	LIN. FT.
501+00	502+59	LT.	198
501+00	505+90	RT.	519
502+94	505+80	LT.	359
506+04	511+70	RT.	638
510+50	511+43	LT.	185
512+48	513+75	RT.	126

STA. 507+45 CONSTRUCT
QUAD. 12'X9'X10.3' R.C. BOX CULVERT
WITH 30° WINGS LT. AND RT.
Q25= 1060 CFS D.A. = 1.75 SQ. MI.
SPAN = 5'-4"

HWY. 45 SITE 3
PI = 511+35.74
Δ = 14°40'29"LT.
D = 6°30'00"
T = 113.50'
L = 225.76'
PC = 510+22.24
PT = 512+48.00
e = 0.010'/'
Ls = 350'
SUPER. ROTATED ABOUT C.L.

STA. 511+59 IN PLACE
18" X 20' RC PIPE CULVERT
LT. SIDE DRAIN
REMOVE AND INSTALL
18" X 48' PIPE CULVERT
LT. SIDE DRAIN
CONSTRUCT APPROACH = 135 CU. YDS. COMP. EMB.
10 CU. YDS. UNCL. EXC.

FENCE

STA.	STA.	SIDE	LIN. FT.	TYPE	GATES
501+00	502+59	LT.	159	D	1
501+00	505+90	RT.	490	D	1
502+94	505+74	LT.	280	D	
506+04	507+07	RT.	121	D	
508+83	511+27	RT.	370	D	1
510+50	510+89	LT.	36	D	
511+27	511+43	LT.	15	D	1
511+42	511+64	RT.	24	D	1
512+48	513+75	LT.	127	D	

STA. 505+95 IN PLACE
18" X 24' CM PIPE CULVERT
RT. SIDE DRAIN
REMOVE AND INSTALL
18" X 48' PIPE CULVERT
RT. SIDE DRAIN
CONSTRUCT APPROACH = 50 CU. YDS.

STA. 511+35 IN PLACE
18" X 20' RC PIPE CULVERT
RT. SIDE DRAIN
REMOVE AND INSTALL
18" X 46' PIPE CULVERT
RT. SIDE DRAIN
CONSTRUCT APPROACH = 155 CU. YDS.

STA. 511+89 IN PLACE
18" X 20' CM PIPE CULVERT
RT. SIDE DRAIN
REMOVE AND INSTALL
18" X 50' PIPE CULVERT
RT. SIDE DRAIN
CONSTRUCT APPROACH = 180 CU. YDS.

STA. 501+00.00
BEGIN SITE 3
LOG MILE 7.54

STA. 513+75.00
END SITE 3
END JOB 040792

HWY. 45 SITE 3

REFER TO SURVEY CONTROL DETAIL SHEETS FOR HORIZONTAL AND VERTICAL CONTROL DATA.

FOR ALL THE CONSTRUCTION OF TEMPORARY WORK RAMPS OR HAUL ROADS, THIS STREAM IS CLASSIFIED AS AN INTERMITTENT STREAMBANK ELEVATION IS 526 FT. M.L.S. BETWEEN STA. 507+25 AND STA. 507+80 REFER TO SECTION 110.05 (C) OF THE 2014 STANDARD SPECIFICATIONS

STA. 508+42.33 BEGIN SUPERELEVATION
STA. 510+82.21 MAX SUPERELEVATION (0.069 '/')
STA. 511+35.12 MAX SUPERELEVATION (0.069 '/')
STA. 513+75.00 END SUPERELEVATION
SUPERELEVATION ROTATED ABOUT CENTERLINE

P.V.I. 501+00.00 ELEV. 537.66
P.V.C. 502+31.76 ELEV. 535.38
P.V.T. 505+17.76 ELEV. 533.98
P.V.C. 506+43.85 ELEV. 534.92
P.V.I. 507+35.35 ELEV. 535.61
P.V.T. 508+26.85 ELEV. 534.83
P.V.C. 508+51.09 ELEV. 534.63
P.V.I. 509+59.09 ELEV. 533.71
P.V.T. 510+67.09 ELEV. 534.81
P.V.I. 513+75.00 ELEV. 537.95
P.V.I. 503+74.76 ELEV. 532.91

K=115.32 VC=286' e=0.89'
K=114.38 VC=183' e=-0.37'
K=115.51 VC=216' e=0.50'

-1.73% 0.75% -0.85% 1.02%

Q25 DESIGN H.W. 527.66

RT. DITCH GRADE -0.35%
LT. DITCH GRADE -0.40%

504+36.00 527.19 (RT.)
504+36.00 527.19 (LT.)
506+07.00 526.60 (RT.)
506+07.00 526.50 (LT.)
507+07.00 523.60 (RT.)
507+07.00 523.70 (LT.)
507+83.00 523.60 (RT.)
507+83.00 523.70 (LT.)
508+83.00 526.54 (LT.)
508+83.00 524.86 (RT.)
509+94.00 527.55 (LT.)
510+00.00 529.09 (RT.)

LT. DT. GD. -3.00%
LT. DT. GD. -2.80%
LT. DT. GD. 2.84%
LT. DT. GD. 0.91%
RT. DT. GD. 1.26%
RT. DT. GD. 3.62%

STA. 507+45.00
F.L. INLET (LT.) = 523.70
F.L. OUTLET (RT.) = 523.60

555 550 545 540 535 530 525 520 515 510

500+00 501+00 502+00 503+00 504+00 505+00 506+00 507+00 508+00 509+00 510+00 511+00 512+00 513+00 514+00 515+00

RD38049 8/6/2024
R040792.DGN

DATE REVISED	DATE FILMED	DATE REVISED	DATE FILMED	FED.RD. DIST.NO.	STATE	FED.AID PROJ.NO.	SHEET NO.	TOTAL SHEETS
				6	ARK.			
				JOB NO.		040792	66	122

(2) PLAN AND PROFILE SHEETS

HWY. 45 SITE 3 DETOUR
PI = 703+51.73
Δ = 13°35'19"LT.
D = 10°30'00"
T = 65.01'
L = 129.42'
PC = 702+86.72
PT = 704+16.14
e = 0.100'/'
Ls = 300'
SUPER. ROTATED ABOUT C.L.

HWY. 45 SITE 3 DETOUR
PI = 705+40.19
Δ = 13°25'46"RT.
D = 10°30'00"
T = 64.24'
L = 127.90'
PC = 704+75.95
PT = 706+03.85
e = 0.100'/'
Ls = 300'
SUPER. ROTATED ABOUT C.L.

STA. 507+00 INSTALL
18" X 68' TEMP. PIPE
STAGE I CONSTRUCTION

STA. 508+00 INSTALL
18" X 66' TEMP. PIPE
STAGE I CONSTRUCTION

HWY. 45 SITE 3 DETOUR
PI = 708+64.51
Δ = 12°39'41"RT.
D = 10°30'00"
T = 60.54'
L = 120.58'
PC = 708+03.97
PT = 709+24.56
e = 0.100'/'
Ls = 300'
SUPER. ROTATED ABOUT C.L.

HWY. 45 SITE 3 DETOUR
PI = 711+08.53
Δ = 27°20'11"LT.
D = 10°30'00"
T = 132.70'
L = 260.35'
PC = 709+75.83
PT = 712+36.17
e = 0.100'/'
Ls = 300'
SUPER. ROTATED ABOUT C.L.

STATE OF ARKANSAS
LICENSED PROFESSIONAL ENGINEER
No. 11425
TRINITY D. SMITH
08-15-2024

CONST. LIMITS
DETOUR CONST. LIMITS
50' BUFFER
N 2°51'49" E
N 10°43'30" W
N 2°42'16" E
N 15°21'57" E
N 11°58'13" W
P.O.B. 500+00.00
P.O.B. 700+00.00
P.C. 702+86.72
P.I. 503+83.64
P.T. 704+16.14
P.I. 705+40.19
P.I. 703+51.73
P.C. 704+75.95
P.T. 706+03.85
P.C. 708+03.97
P.T. 709+24.56
P.I. 708+64.51
P.C. 709+75.83
P.C. 510+22.24
P.T. 712+36.17
P.T. 512+48.00
P.O.E. 515+14.99
P.O.E. 715+21.84
P.I. 711+08.53
P.I. 511+35.74

STA. 702+86.72
BEGIN SITE 3 DETOUR

STA. 702+86.72 C.L. SITE 3 DETOUR =
STA. 502+86.72 C.L. HWY. 45 SITE 3

STA. 505+95 INSTALL
18" X 34' TEMP. PIPE
AND CONSTRUCT TEMP.
DRIVE = 145 CU. YD.

STA. 712+36.17 C.L. SITE 3 DETOUR =
STA. 512+29.33 C.L. HWY. 45 SITE 3

STA. 712+36.17
END SITE 3 DETOUR

HWY. 45 SITE 3 DETOUR

REFER TO SURVEY CONTROL DETAIL SHEETS FOR HORIZONTAL AND VERTICAL CONTROL DATA.

STA. 704+46.05 MATCH EXISTING SUPER.
STA. 705+39.90 MAX SUPERELEVATION (0.031 '/')
STA. 705+80.39 MAX SUPERELEVATION (0.031 '/')
STA. 706+74.24 END SUPERELEVATION
SUPERELEVATION ROTATED ABOUT CENTERLINE

STA. 707+39.52 BEGIN SUPERELEVATION
STA. 708+25.45 MAX SUPERELEVATION (0.028 '/')
STA. 708+64.27 MAX SUPERELEVATION (0.028 '/')
STA. 709+50.19 MATCH EXISTING SUPER.
SUPERELEVATION ROTATED ABOUT CENTERLINE

P.V.C. 703+43.02
ELEV. 532.84
K=49.01
VC=174'
e=0.77'
-2.11%
P.V.I. 704+29.97
ELEV. 531.00
P.V.T. 705+16.92
ELEV. 532.25
1.44%
P.V.C. 706+79.38
ELEV. 534.59
P.V.I. 707+60.00
ELEV. 535.75
K=43.87
VC=161'
e=-0.74'
P.V.C. 708+60.46
ELEV. 533.51
-2.75%
P.V.T. 708+40.62
ELEV. 533.96
K=49.00
VC=244'
e=1.52'
P.V.I. 709+82.36
ELEV. 530.80
2.75%
P.V.T. 711+04.27
ELEV. 534.15
TEMP. RT.
DT. GD. -0.30%
116+00.00
529.71(RT.)
117+00.00
529.71(RT.)
Q25 DESIGN H.W.
527.66
STA. 507+45.00
F.L. INLET (LT.) = 523.70
F.L. OUTLET (RT.) = 523.60

550 545 540 535 530 525 520 515 510 505
700+00 701+00 702+00 703+00 704+00 705+00 706+00 707+00 708+00 709+00 710+00 711+00 712+00 713+00 714+00 715+00

ba42315 8/9/2024
R040792.DGN

DATE REVISED	DATE FILMED	DATE REVISED	DATE FILMED	FED. ROAD DIST. NO.	STATE	FED. AID PROJ. NO.	SHEET NO.	TOTAL SHEETS
				6	ARK.			
				JOB NO.		040792	67	122
				①	07567 - LAYOUT - 64503			

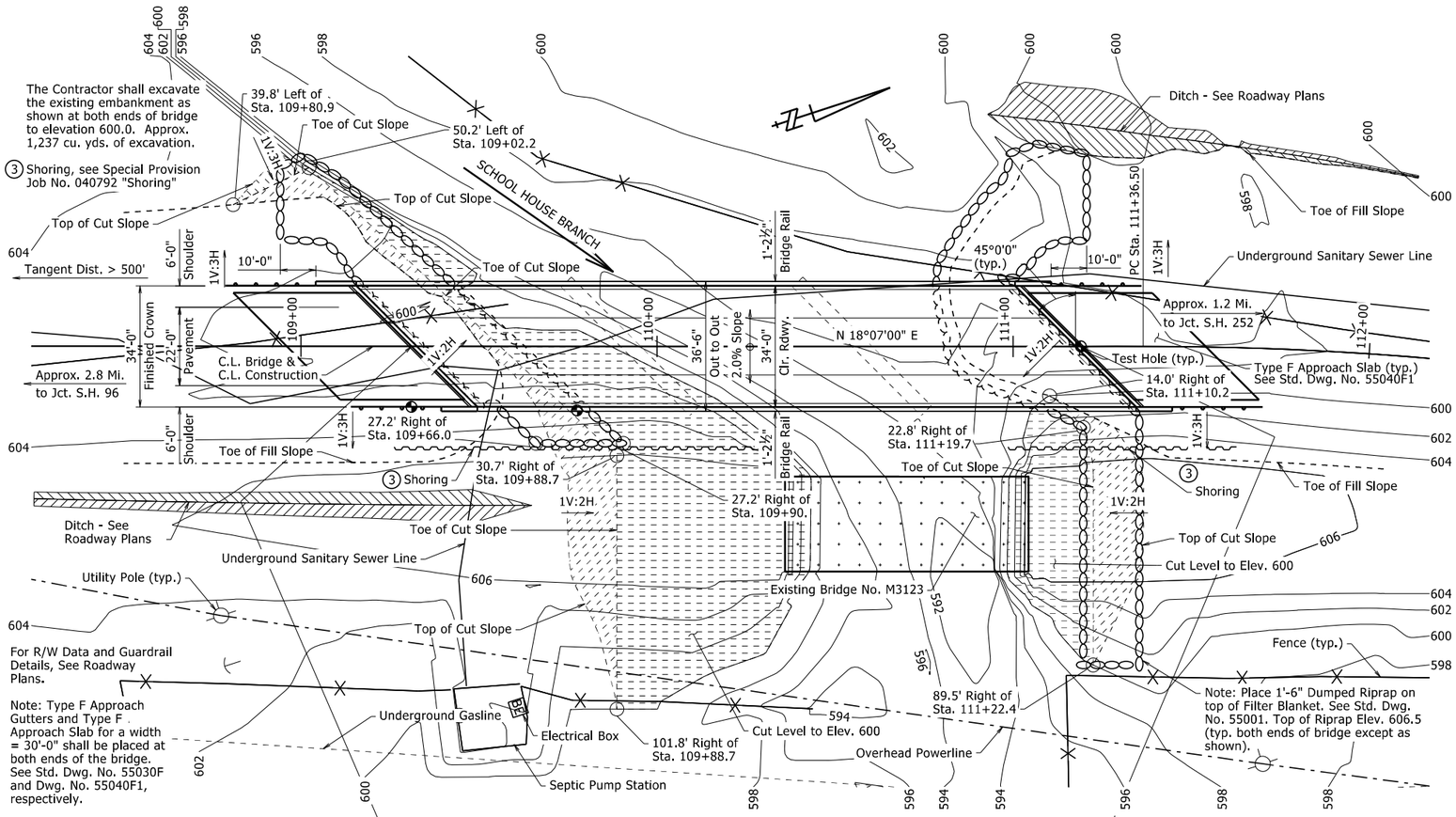

PLAN

HYDRAULIC DATA

FLOOD DESCRIPTION	FREQUENCY	DISCHARGE	NATURAL WATER SURFACE ELEVATION	① WATER SURFACE ELEVATION WITH BACKWATER
	YEARS	CFS	FEET	FEET
Design	25	1810	603.1	605.6
Base	100	2840	604.0	606.7
Extreme	500	4310	604.9	609.3
Overtopping	>500	-	-	-

① Unconstricted water surface elevation without structure or roadway approaches.

Q100 backwater elevation for existing structure = 606.9 feet
Proposed Low Bridge Chord Elev. = 607.1 feet (Sta. 111+33.39)

Drainage Area = 2.6 square miles
Historical H.W. Elev. = 605.7 feet

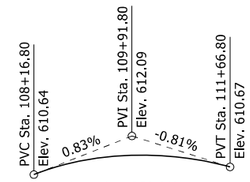

VERTICAL ALIGNMENT DATA

Theoretical Working Point Along C.L Construction
No Scale

Note:
Stations shown are taken along C.L. Construction. Elevations shown are theoretical working point elevations at C.L. Bridge. Any vertical dimension referenced to C.L. Deck is based on theoretical working point elevation at C.L. Bridge. See "Rounding Detail" on Standard Drawing number 55007 for additional information.

See Dwg. No. 64504 for Soil Borings.

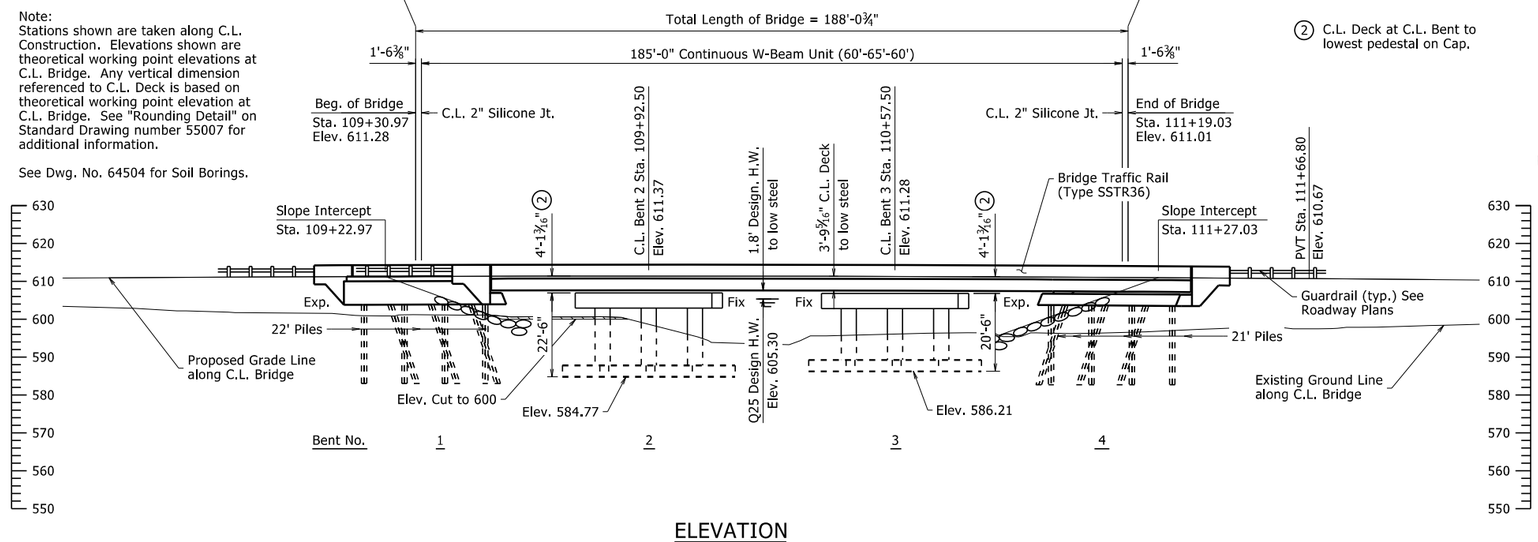

ELEVATION

② C.L. Deck at C.L. Bent to lowest pedestal on Cap.

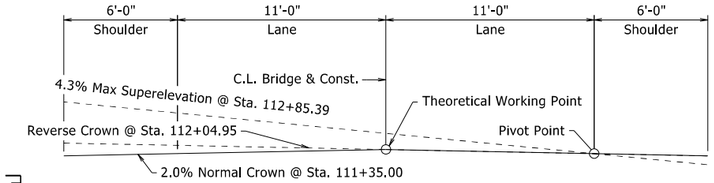

CROSS SLOPE TRANSITION SKETCH

Looking Ahead
No Scale

STATE OF ARKANSAS
Charles R. Ellis
LICENSED PROFESSIONAL ENGINEER
No. 9235
9/22/23
CHARLES R. ELLIS
BRIDGE ENGINEER

SHEET 1 OF 2
LAYOUT OF BRIDGE
HIGHWAY 45 OVER SCHOOL HOUSE BRANCH
HWY. 45 STRS. & APPRS. (S)
SEBASTIAN COUNTY

ROUTE 45 SEC. I

ARKANSAS STATE HIGHWAY COMMISSION

LITTLE ROCK, ARK.

DRAWN BY: DPT DATE: 3/26/2020 FILENAME: b040792x1_l1.dgn
CHECKED BY: JJ DATE: 9/22/2023 SCALE: 1" = 20' - 0"
DESIGNED BY: DPT DATE: 3/2020

BRIDGE NO. 07567 DRAWING NO. 64503

PRINT DATE: 9/22/2023

DATE REVISED	DATE FILMED	DATE REVISED	DATE FILMED	FED. ROAD DIST. NO.	STATE	FED. AID PROJ. NO.	SHEET NO.	TOTAL SHEETS
				6	ARK.			
				JOB NO.		040792	68	122
				07567 - LAYOUT - 64504				

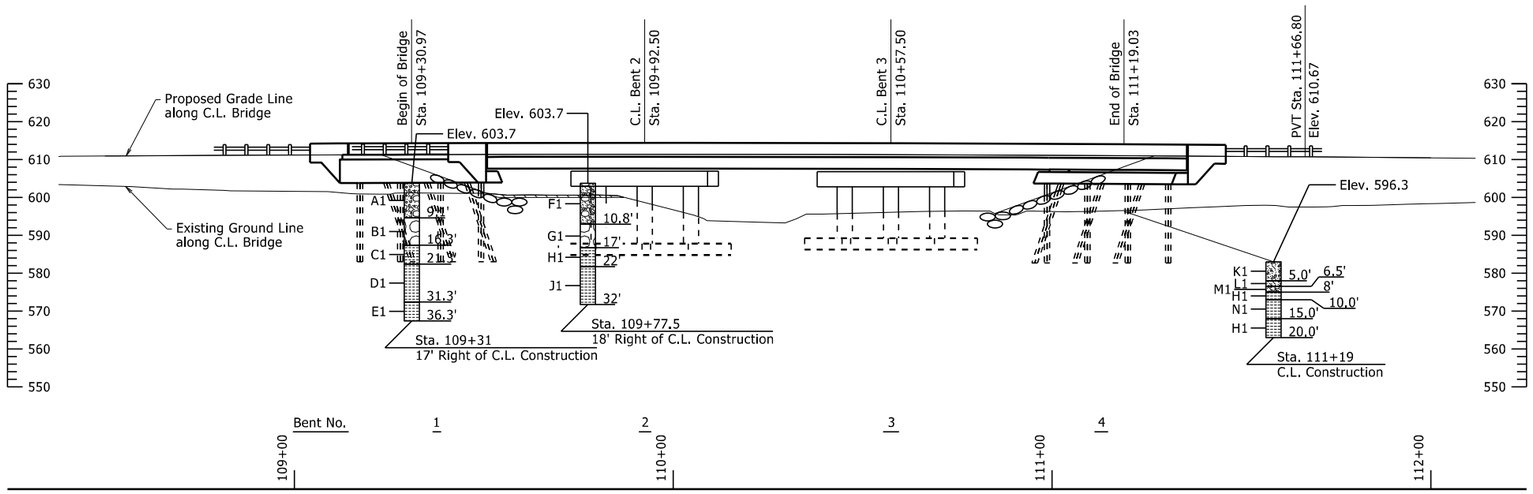

ELEVATION OF SOIL BORINGS

BORING LEGEND

A1-Moist, Medium Dense, Brown Sand with Gravel, Cobbles, and Boulders
B1-Brown and Gray Sandstone Cobbles and Boulders
C1-SHALE - Slightly Weathered, Medium Hard, Dark Gray
D1-SHALE - Unweathered, Medium Hard, Frequent Slickensides, Occasional Fractures, Dark Gray
E1-SHALE - Unweathered, Medium Hard, Dark Gray
F1-Moist, Medium Dense, Brown Clayey Sand with Sandstone Cobbles and Boulders
G1-Brown Sandstone Boulders
H1-SHALE - Slightly Weathered, Medium Hard, Frequent Slickensides, Dark Gray
J1-SHALE - Unweathered, Medium Hard, Frequent Slickensides Dark Gray
K1-Moist, Medium Dense, Brown Clayey Sand with Gravel
L1-Moist, Dense, Brown Clayey Sand with Gravel
M1-Brown Clayey Sand with Gravel and Cobbles
N1-SHALE - Slightly Weathered, Medium Hard with Soft Layers, Frequent Slickensides, Dark Gray

GENERAL NOTES:

BENCHMARK: Vertical Control Data are shown on the Survey Control Data Sheets.

CONSTRUCTION SPECIFICATIONS: Arkansas State Highway and Transportation Department Standard Specifications for Highway Construction (2014 edition) with applicable Supplemental Specifications and Special Provisions. Unless otherwise noted on the Plans, Section and Subsection refer to the Standard Construction Specifications.

DESIGN SPECIFICATIONS: AASHTO LRFD Bridge Design Specifications, Eighth Edition (2017).

LIVE LOADING: HL-93

SEISMIC ZONE: 1 SD1 = 0.088 SITE CLASS: C

SEISMIC OPERATIONAL CLASSIFICATION: Other

MATERIALS AND STRENGTHS:

Class S(AE) Concrete (Superstructure)	f'c = 4,000 psi
Class S Concrete (Substructure)	f'c = 3,500 psi
Reinforcing Steel (AASHTO M 31 or M 322, Type A)	fy = 60,000 psi
Structural Steel (ASTM A709, Gr. 50)	Fy = 50,000 psi
Structural Steel (ASTM A709, Gr. 50W)	Fy = 50,000 psi
Structural Steel (ASTM A709, Gr. 36)	Fy = 36,000 psi

BORING LOGS: Boring logs may be obtained from the Construction Contract Development Section of the Program Management Division.

STEEL PILING: All piling shall be HP 12x53 (Grade 50) and shall be driven with an approved air, steam, or diesel hammer to a minimum safe bearing capacity of 95 tons per pile and into the material designated as shale on the boring legend. Minimum penetration shall be 10' below natural ground for all piles in Bents 1 and 4. Piling in end bents shall be driven after embankment to bottom of cap is in place. Lengths shown are for estimating quantities and for use in determining payment of cut-off and build-up in accordance with Section 805. The Contractor shall use QPL approved steel H-Pile driving points on all piles.

PREBORING: Preboring is required for all piles Bents 1 and 4. The depth of preboring shall be to a depth sufficient to provide the specified minimum penetration and to a minimum 3' depth into material designated as shale on the boring legend, whichever is lower. The actual size and depth of preboring shall be determined in the field by the Engineer. The Contractor shall be responsible for keeping prebored holes free of debris prior to driving piles and backfilling which may require the use of temporary casings or other approved methods. After driving is completed, the prebored hole shall be backfilled with Class S Concrete to the top of the rock and the remaining length backfilled in accordance with Subsection 805.08(a). Any related costs for backfilling and temporary casing will not be paid for directly, but shall be considered subsidiary to the item "Preboring".

SPREAD FOOTINGS: Footings shall be set a minimum of 2' into material designated as shale on the boring legend. The top of the footings at Bents 2 and 3 shall be set a minimum 2' below the channel bottom as determined by the lowest channel elevation within the footprint of the footing. Foundations for footings shall be prepared in accordance with Subsection 801.04. Rock excavations shall be made to neat lines of the concrete footings. Care shall be exercised to avoid shattering rock faces by excessive blasting. Concrete in footings shall be poured directly against excavated surfaces of rock. Excavations shall be backfilled and compacted to the level of the existing ground in accordance with Subsection 801.08.

PAINTING: All Grade 50W Structural Steel, except galvanized members, surfaces in contact with concrete, and the expansion device, within fourteen feet of bridge deck expansion joints shall be painted as specified in Subsection 807.75. The color of paint shall be Brown equal or close to Federal Std. 595B, Color Chip No. 30070 and as approved by the Engineer. The finish system may be applied in the shop. Any damage to the paint system occurring during transport or installation shall be corrected according to the manufacturer's recommendation at no cost to the Department. ASTM F3125, Grade A325 Type 3 bolts shall be used within these painted zones and shall be painted.

BRIDGE DECK: The concrete bridge deck shall be given a tine finish as specified for final finishing in Subsection 802.19 for Class 5 Tined Bridge Roadway Surface Finish.

PROTECTIVE SURFACE TREATMENT: Class 2 Protective Surface Treatment shall be applied to the roadway surface and to the roadway face and top of the concrete bridge traffic rails in accordance with Section 803.

DETAIL DRAWINGS	DRAWING NOS.
End Bents	64505 - 64509
Intermediate Bents	64510 - 64512
Elastomeric Bearings	64513
185'-0" Continuous W-Beam Unit	64514 - 64517
General Notes for Steel Bridge Structures	55006
Details for Steel Bridge Structures	55007
Poured Silicone Joints	55008
Steel H-Piling	55020
Bridge Traffic Rail	55070

EXISTING BRIDGE: Existing bridge No. M3123 (Log Mile 2.79) is 28.2' wide (26.2' roadway) and 69' long and consists of three precast channel beam unit spans. All spans are supported by concrete bents on concrete columns with footings.

REMOVAL AND SALVAGE: After the new bridge is open to traffic, the Contractor shall remove existing Bridge No. M3123 in accordance with Section 205. Removal of concrete riprap will not be paid for directly but shall be considered subsidiary to the item "Removal of Existing Bridge Structure (Site No.)". All material from the existing bridge shall become the property of the Contractor.

MAINTENANCE OF TRAFFIC: See Roadway Plans.

"N" VALUES

Sta. 109+31 - 17' Right of C.L. Construction
5.4 - 6.4,N=29

Sta. 109+77.5 - 18' Right of C.L. Construction
5.6 - 6.6,N=23

Sta. 111+19 - C.L. Construction
4.0 - 5.0,N=27
5.5 - 6.5,N=48

STATE OF ARKANSAS
Charles R. Ellis
LICENSED PROFESSIONAL ENGINEER
No. 9235
9/22/23
CHARLES R. ELLIS
BRIDGE ENGINEER

SHEET 2 OF 2
LAYOUT OF BRIDGE
HIGHWAY 45 OVER SCHOOL HOUSE BRANCH
HWY. 45 STRS. & APPRS. (S)
SEBASTIAN COUNTY

ROUTE 45 SEC. 1
ARKANSAS STATE HIGHWAY COMMISSION
LITTLE ROCK, ARK.

DRAWN BY: DPT DATE: 3/26/2020 FILENAME: b040792x1_l1.dgn
CHECKED BY: JJ DATE: 9/22/2023 SCALE: 1" = 20' - 0"
DESIGNED BY: DPT DATE: 3/2020

BRIDGE NO. 07567 DRAWING NO. 64504

PRINT DATE: 9/22/2023

DATE REVISED	DATE FILMED	DATE REVISED	DATE FILMED	FED. ROAD DIST. NO.	STATE	FED. AID PROJ. NO.	SHEET NO.	TOTAL SHEETS
				6	ARK.			
				JOB NO.		040792	69	122

(1) 07567 - END BENTS - 64505

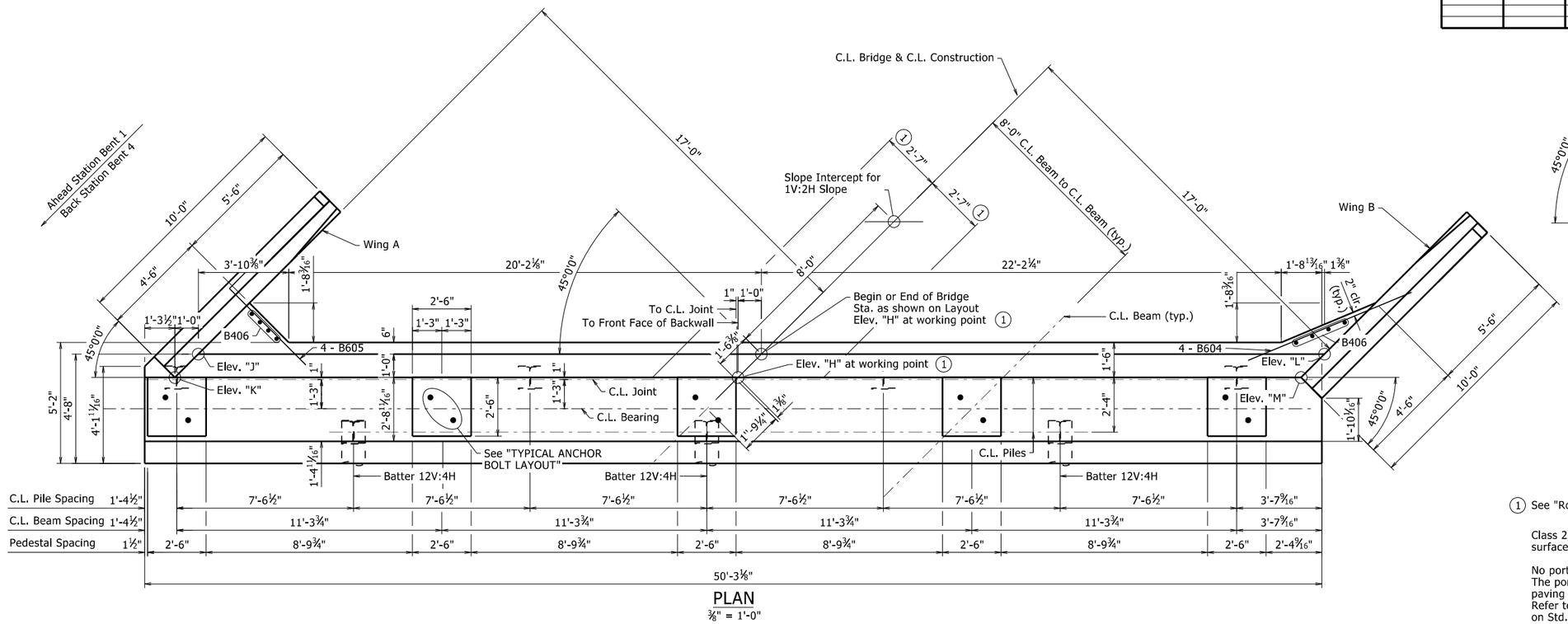

PLAN

⅜" = 1'-0"

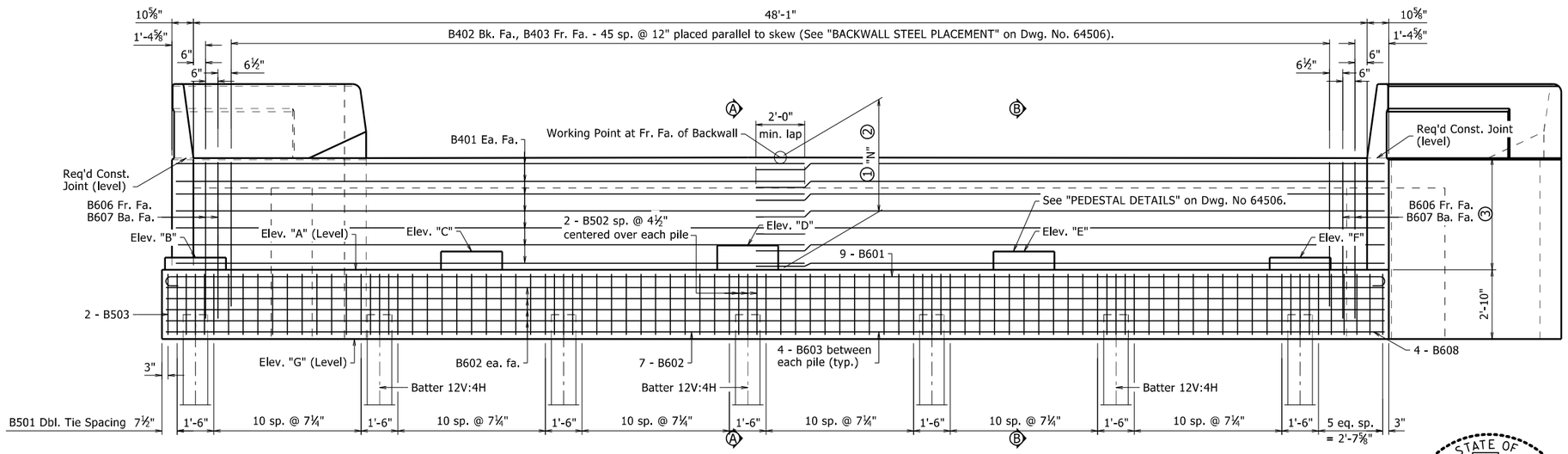

ELEVATION

⅜" = 1'-0"
Looking Back - Bent 1
Looking Ahead - Bent 4

TABLE OF VARIABLES

BENT	ELEV. "A"	ELEV. "B"	ELEV. "C"	ELEV. "D"	ELEV. "E"	ELEV. "F"	ELEV. "G"	ELEV. "H"	ELEV. "J"	ELEV. "K"	ELEV. "L"	ELEV. "M"	"N"
1	606.68	607.19	607.33	607.44	607.28	607.10	603.85	611.28	610.98	610.99	610.88	610.89	4'-7³⁄₁₆"
4	606.37	606.97	607.09	607.18	607.00	606.79	603.54	611.01	610.76	610.77	610.56	610.57	4'-7¹¹⁄₁₆"

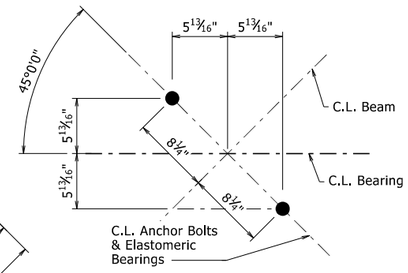

TYPICAL ANCHOR BOLT LAYOUT

No Scale

(1) See "Rounding Detail" on Std. Dwg. No. 55007.

Class 2 Protective Surface Treatment shall be applied to the roadway surface, roadway face, & top of the concrete bridge rail.

No portion of the backwall shall be poured before beams are in place. The portion of the backwall above the optional construction joint at the paving bracket shall not be placed until the deck pour has been made. Refer to the "EXPANSION DEVICE INSTALLATION AT END BENTS" note on Std. Dwg. No. 55008. No heavy construction equipment or backfill shall be allowed within 10' of the backwall until the concrete for the span has been completed.

Structural Steel in end bents shall be ASTM A709 Gr. 50W and shall be paid for as "Structural Steel in Beam Spans (ASTM A709, Gr. 50W)."

All piling shall be Grade 50 and shall conform to Std. Dwg. No. 55020.

See Std. Dwg. No. 55006 for additional notes.

See Layout for additional information.

(2) Measured at C.L. Bridge at Front Face of Backwall to Working Point

(3) See Dwg. No. 64508 for dimension.

For "SECTION A-A" and "SECTION B-B", see Dwg. No. 64506.

STATE OF ARKANSAS
Charles R. Ellis
LICENSED PROFESSIONAL ENGINEER
No. 9235
9/22/23
CHARLES R. ELLIS
BRIDGE ENGINEER

SHEET 1 OF 5
DETAILS OF END BENTS
SCHOOL HOUSE BRANCH

ROUTE SEC.

ARKANSAS STATE HIGHWAY COMMISSION
LITTLE ROCK, ARK.

DRAWN BY: BAB DATE: 6/11/2021 FILENAME: b040792x1_b1.dgn
CHECKED BY: DPT DATE: 8/31/2021 SCALE: As Shown
DESIGNED BY: BAB DATE: 6/2021

BRIDGE NO. 07567 DRAWING NO. 64505

PRINT DATE: 9/22/2023

DATE REVISED	DATE FILMED	DATE REVISED	DATE FILMED	FED. ROAD DIST. NO.	STATE	FED. AID PROJ. NO.	SHEET NO.	TOTAL SHEETS
				6	ARK.			
				JOB NO.		040792	70	122

1 07567 - END BENTS - 64506

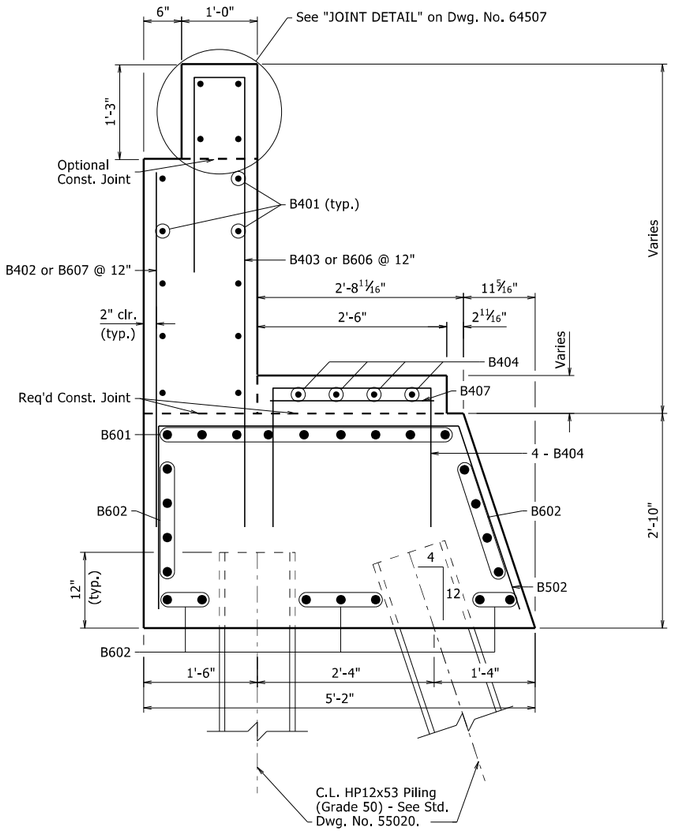

SECTION A-A

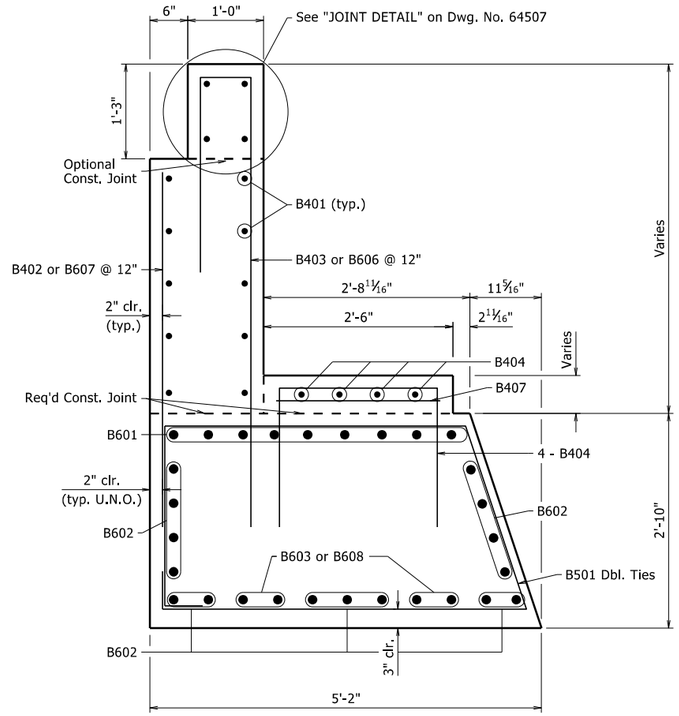

SECTION B-B

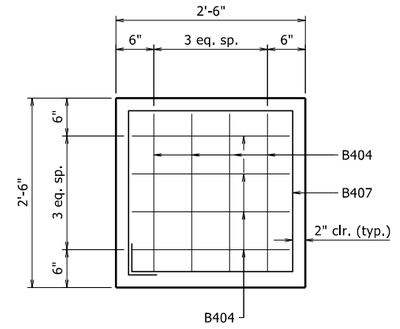

PEDESTAL PLAN

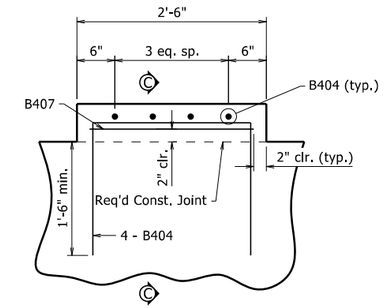

TYPICAL PEDESTAL DETAIL

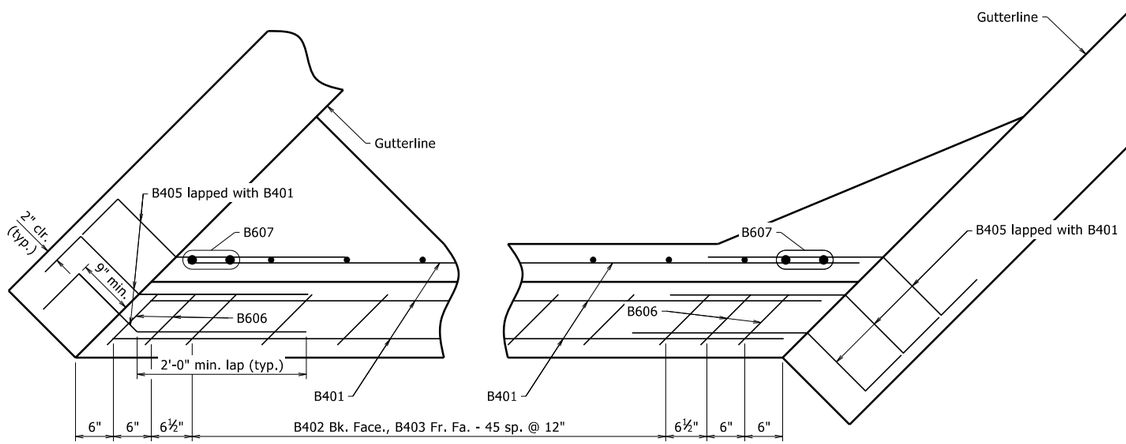

BACKWALL STEEL PLACEMENT

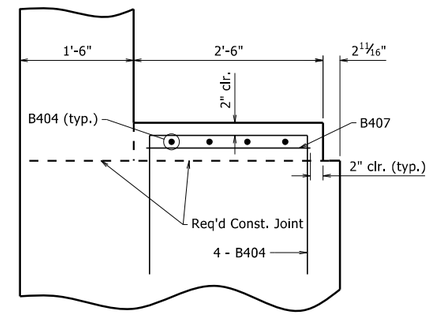

SECTION C-C

STATE OF ARKANSAS
Charles R. Ellis
LICENSED PROFESSIONAL ENGINEER
No. 9235
9/22/23
CHARLES R. ELLIS

BRIDGE ENGINEER

SHEET 2 OF 5
DETAILS OF END BENTS
SCHOOL HOUSE BRANCH

ROUTE SEC.

ARKANSAS STATE HIGHWAY COMMISSION

LITTLE ROCK, ARK.

DRAWN BY: BAB DATE: 6/11/2021 FILENAME: b040792x1_b1.dgn
CHECKED BY: DPT DATE: 8/31/2021 SCALE: 1" = 1'-0"
DESIGNED BY: BAB DATE: 6/2021

BRIDGE NO. 07567 DRAWING NO. 64506

PRINT DATE: 9/22/2023

DATE REVISED	DATE FILMED	DATE REVISED	DATE FILMED	FED. ROAD DIST. NO.	STATE	FED. AID PROJ. NO.	SHEET NO.	TOTAL SHEETS
				6	ARK.			
				JOB NO.		040792	71	122
				①		07567 - END BENTS - 64507		

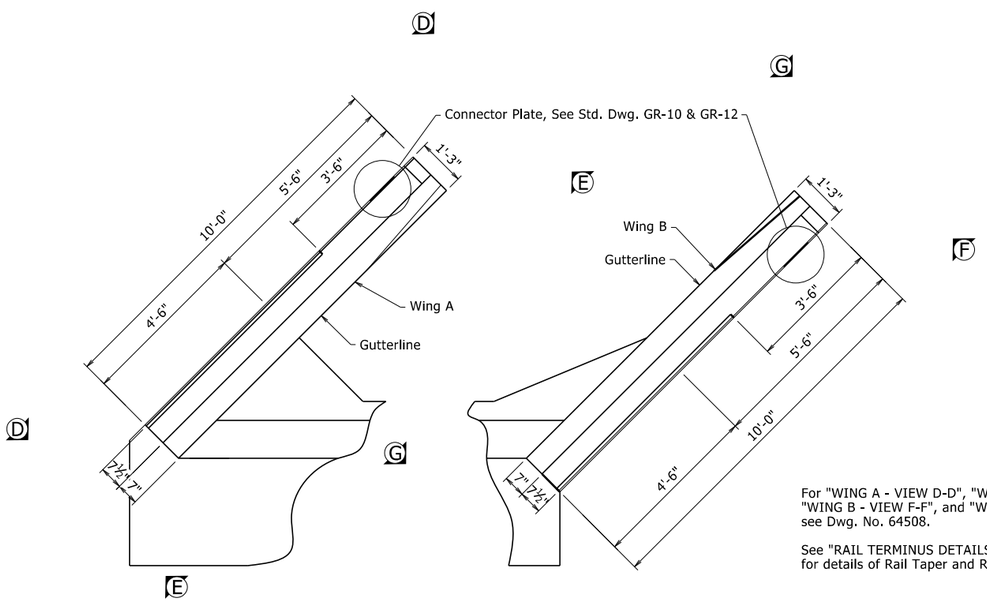

PLAN OF RAIL
½" = 1'-0"

For "WING A - VIEW D-D", "WING A - SECTION E-E", "WING B - VIEW F-F", and "WING B - SECTION G-G", see Dwg. No. 64508.

See "RAIL TERMINUS DETAILS" on Std. Dwg. No. 55070 for details of Rail Taper and Radius at end of wing.

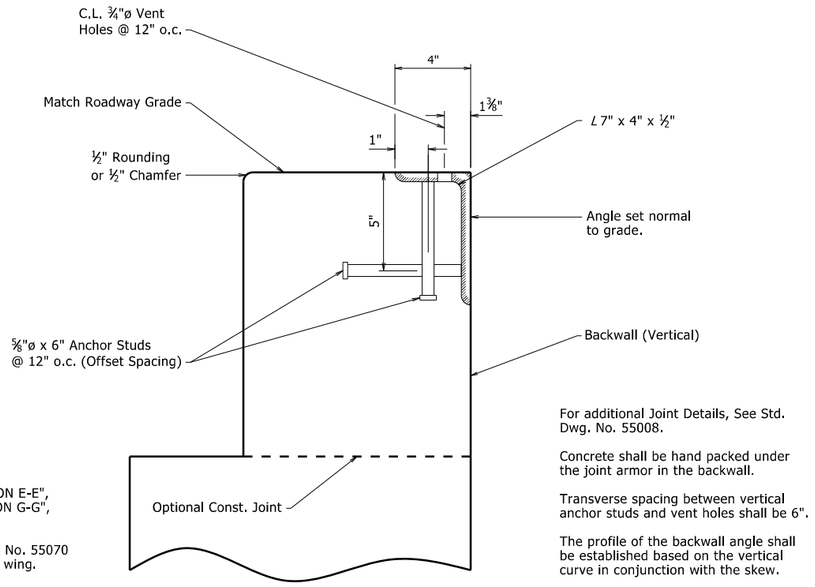

JOINT DETAIL
No Scale

For additional Joint Details, See Std. Dwg. No. 55008.

Concrete shall be hand packed under the joint armor in the backwall.

Transverse spacing between vertical anchor studs and vent holes shall be 6".

The profile of the backwall angle shall be established based on the vertical curve in conjunction with the skew.

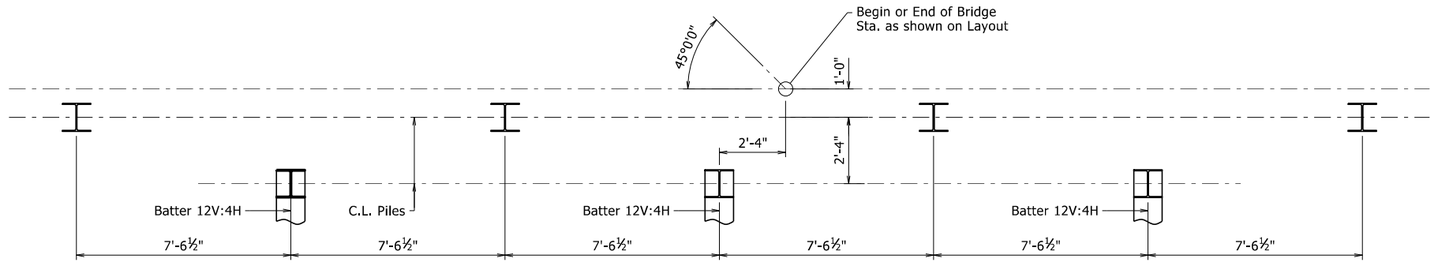

FOUNDATION PLAN
⅜" = 1'-0"
All dimensions are at bottom of cap.

STATE OF ARKANSAS
Charles R. Ellis
LICENSED PROFESSIONAL ENGINEER
No. 9235
9/22/23
CHARLES R. ELLIS

BRIDGE ENGINEER

SHEET 3 OF 5
DETAILS OF END BENTS
SCHOOL HOUSE BRANCH

ROUTE SEC.

ARKANSAS STATE HIGHWAY COMMISSION
LITTLE ROCK, ARK.

DRAWN BY: BAB DATE: 6/11/2021
CHECKED BY: DPT DATE: 8/31/2021
DESIGNED BY: BAB DATE: 6/2021
FILENAME: b040792x1_b1.dgn
SCALE: As Shown

BRIDGE NO. 07567 DRAWING NO. 64507

PRINT DATE: 9/22/2023

DATE REVISED	DATE FILMED	DATE REVISED	DATE FILMED	FED. ROAD DIST. NO.	STATE	FED. AID PROJ. NO.	SHEET NO.	TOTAL SHEETS
				6	ARK.			
				JOB NO.		040792	72	122

1 07567 - END BENTS - 64508

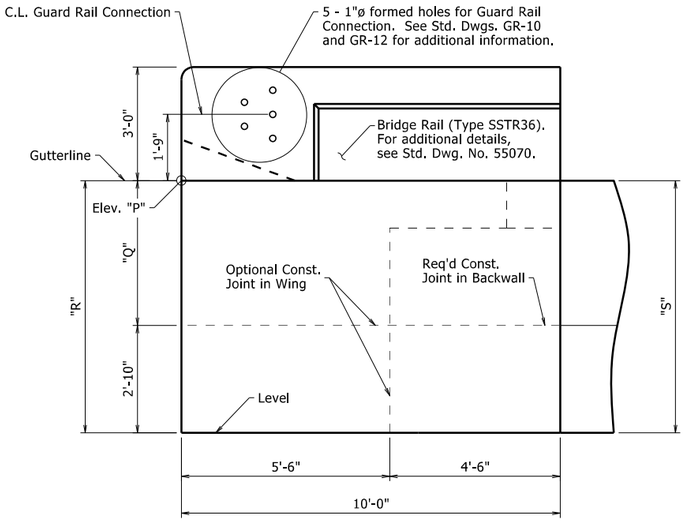

WING A - VIEW D-D

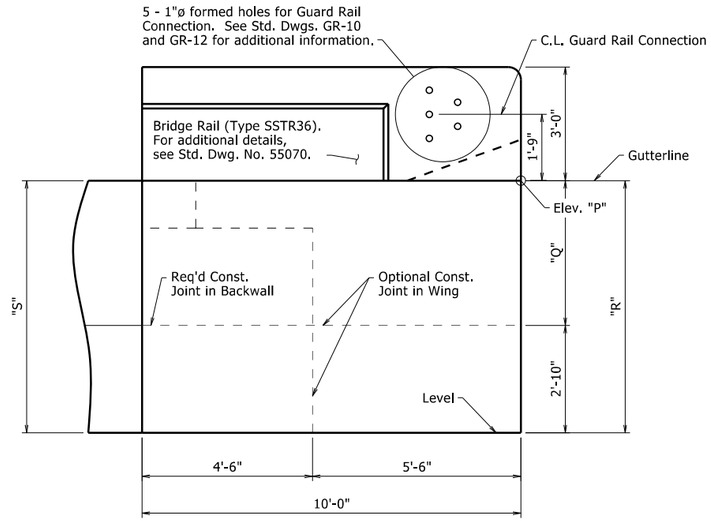

WING B - VIEW F-F

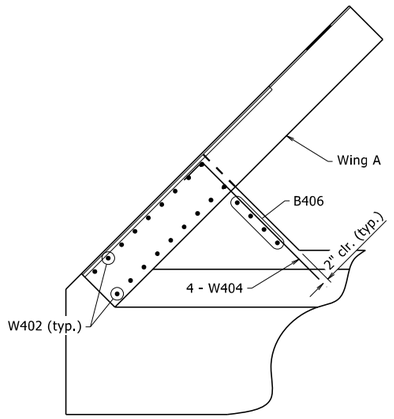

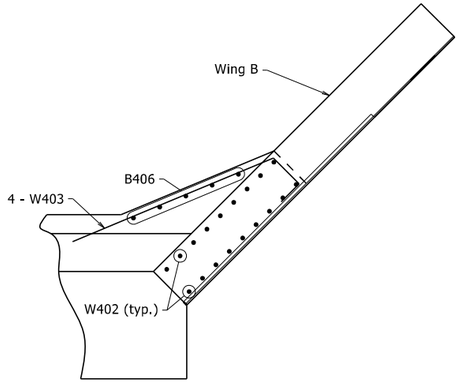

SECTION H-H

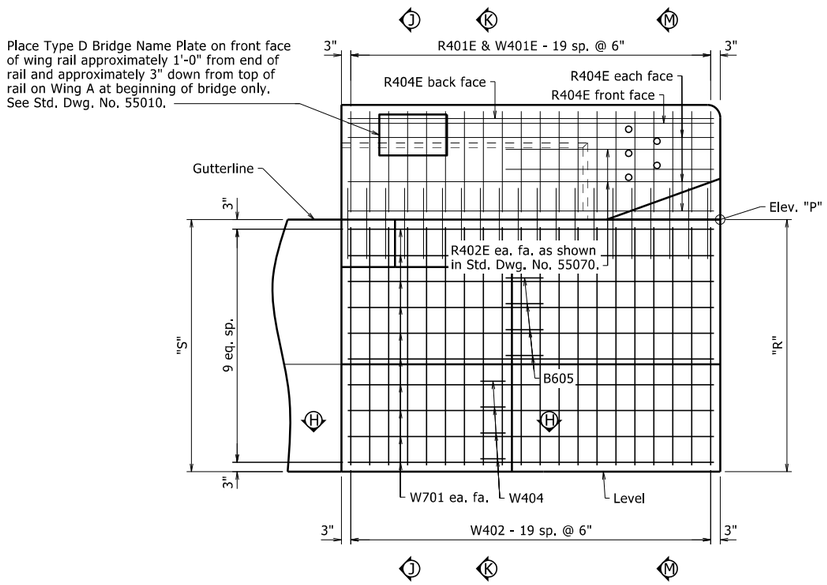

WING A - SECTION E-E

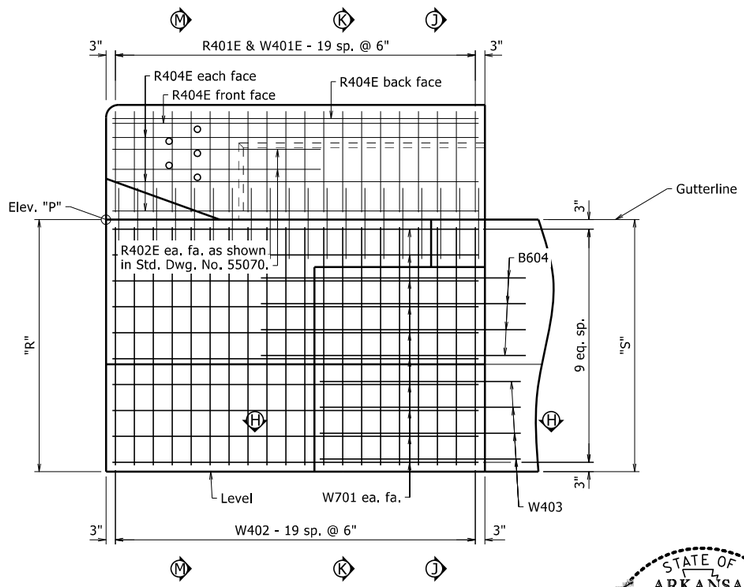

WING B - SECTION G-G

TABLE OF VARIABLES

	WING	ELEV. "P"	"Q"	"R"	"S"
BENT 4 BENT 1	A	610.96	4'-3 5/16"	7'-1 5/16"	7'-0 1/2"
	B	610.85	4'-2"	7'-0"	7'-1 1/16"
	A	610.71	4'-4 1/16"	7'-2 1/16"	7'-0 3/8"
	B	610.50	4'-1 1/2"	6'-11 1/2"	7'-2 3/4"

For "SECTION J-J", "SECTION K-K" and "SECTION M-M", see Dwg. No. 64509.

STATE OF ARKANSAS
Charles R. Ellis
LICENSED PROFESSIONAL ENGINEER
No. 9235
9/22/23
CHARLES R. ELLIS
BRIDGE ENGINEER

SHEET 4 OF 5
DETAILS OF END BENTS
SCHOOL HOUSE BRANCH

ROUTE SEC.
ARKANSAS STATE HIGHWAY COMMISSION
LITTLE ROCK, ARK.

DRAWN BY: BAB DATE: 6/11/2021 FILENAME: b040792x1_b1.dgn
CHECKED BY: DPT DATE: 8/31/2021 SCALE: 1/2" = 1'-0"
DESIGNED BY: BAB DATE: 6/2021

BRIDGE NO. 07567 DRAWING NO. 64508

PRINT DATE: 9/22/2023

DATE REVISED	DATE FILMED	DATE REVISED	DATE FILMED	FED. ROAD DIST. NO.	STATE	FED. AID PROJ. NO.	SHEET NO.	TOTAL SHEETS
				6	ARK.			
				JOB NO.		040792	73	122
				①		07567 - END BENTS - 64509		

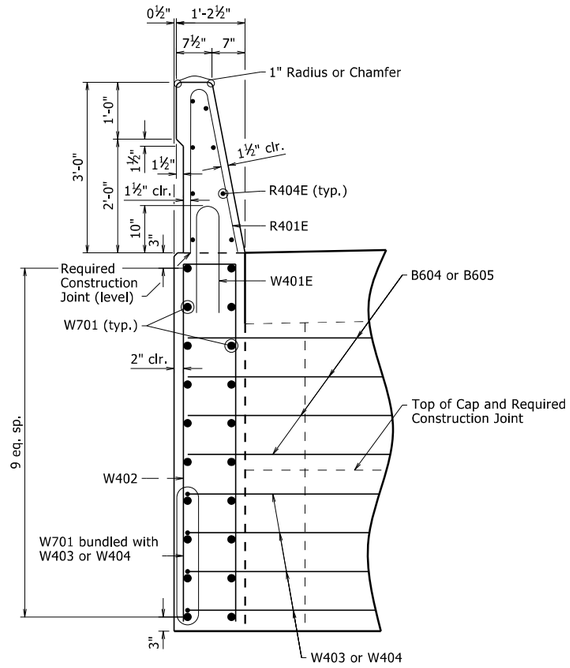

SECTION J-J

¾" = 1'-0"

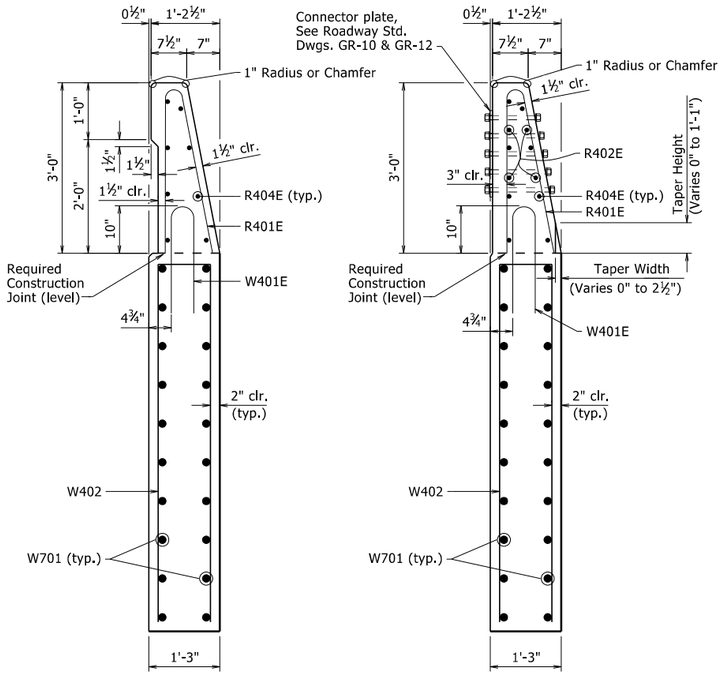

SECTION K-K

¾" = 1'-0"

SECTION M-M

¾" = 1'-0"

BAR LIST - PER BENT

	MARK	NO. REQ'D	LENGTH	P.D.
①	R401E	40	6'-4"	2½"
①	R402E	8	5'-6"	Str.
①	R404E	16	9'-8"	Str.
	B401	28	26'-0"	Str.
	B402	46	4'-9"	Str.
	B403	46	9'-4"	2"
	B404	40	6'-3"	2"
	B405	28	3'-8"	3"
	B406	8	5'-7"	Str.
	B407	5	9'-0"	2"
	B501	146	14'-0"	2½"
	B502	42	8'-9"	2½"
	B503	2	12'-6"	2½"
	B601	9	51'-4"	4½"
	B602	15	50'-0"	Str.
	B603	24	6'-3"	Str.
	B604	4	9'-6"	Str.
	B605	4	6'-1"	4½'
	B606	4	10'-0"	4½"
	B607	4	5'-0"	Str.
	B608	4	2'-10"	Str.
①	W401E	40	3'-11"	3¾"
	W402	40	14'-5"	2"
	W403	4	7'-4"	3"
	W404	4	5'-0"	3"
	W701	40	9'-8"	Str.

BENDING DIAGRAMS

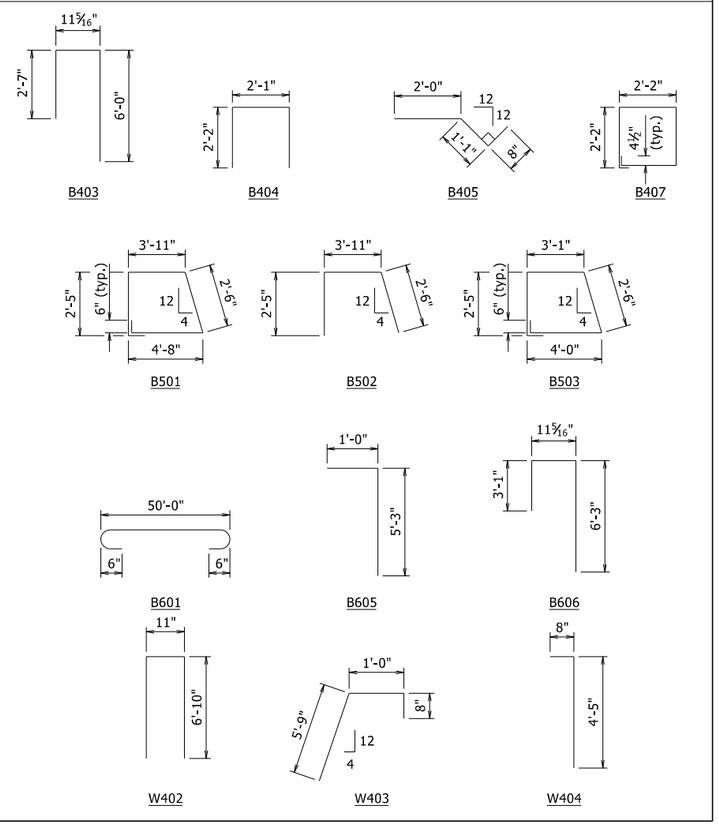

Dimensions are out to out of bars.
Bars with "E" suffix are to be epoxy coated.

① See Std. Dwg. 55070 for additional information.

STATE OF ARKANSAS
Charles R. Ellis
LICENSED PROFESSIONAL ENGINEER
No. 9235
9/22/23
CHARLES R. ELLIS
BRIDGE ENGINEER

SHEET 5 OF 5
DETAILS OF END BENTS
SCHOOL HOUSE BRANCH

ROUTE SEC.

ARKANSAS STATE HIGHWAY COMMISSION
LITTLE ROCK, ARK.

DRAWN BY: BAB DATE: 6/11/2021
CHECKED BY: DPT DATE: 8/31/2021
DESIGNED BY: BAB DATE: 6/2021
FILENAME: b040792x1_b1.dgn
SCALE: As Shown

BRIDGE NO. 07567
DRAWING NO. 64509

PRINT DATE: 9/22/2023

DATE REVISED	DATE FILMED	DATE REVISED	DATE FILMED	FED. ROAD DIST. NO.	STATE	FED. AID PROJ. NO.	SHEET NO.	TOTAL SHEETS
				6	ARK.			
				JOB NO.		040792	74	122
				07567 - INTERMEDIATE BENTS - 64510				

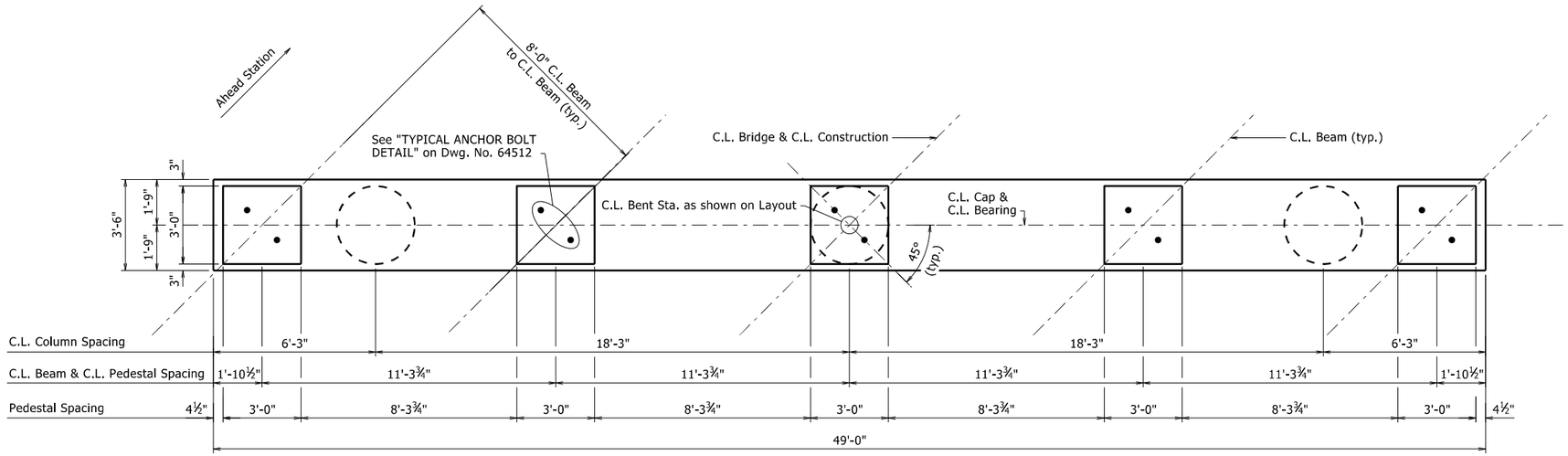

PLAN

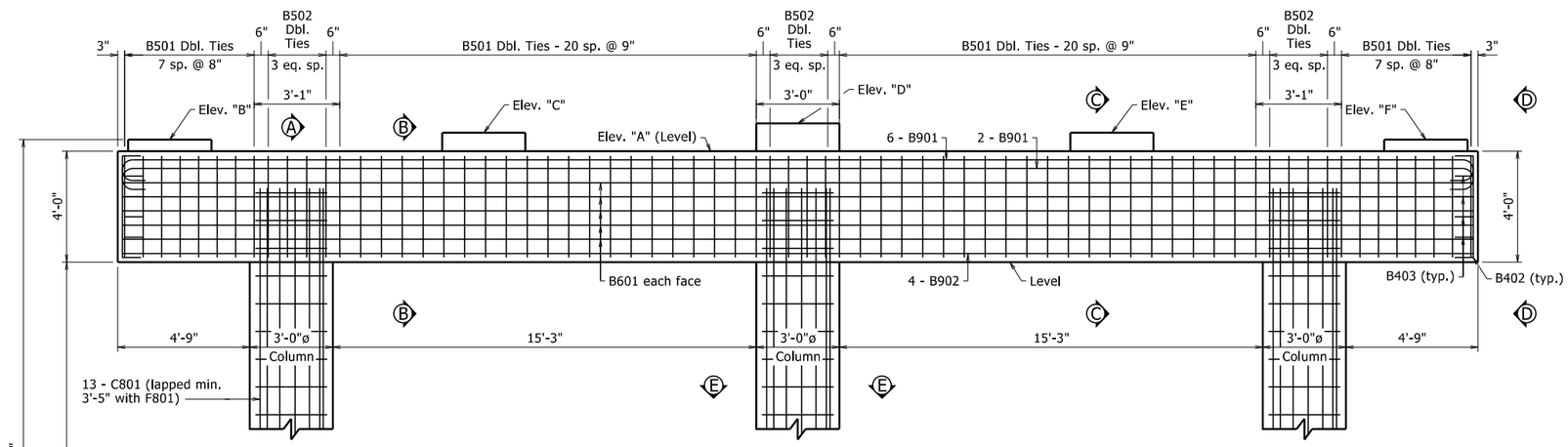

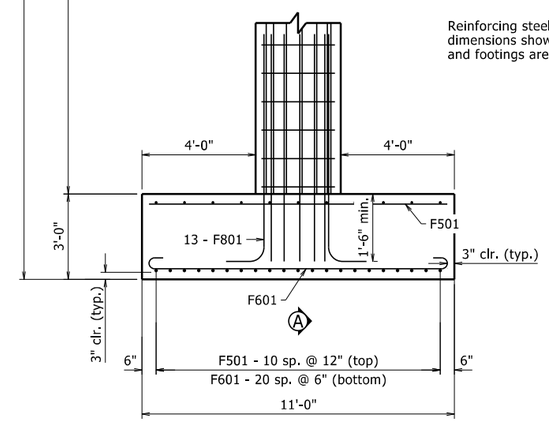

Reinforcing steel, details, and dimensions shown for columns and footings are typical.

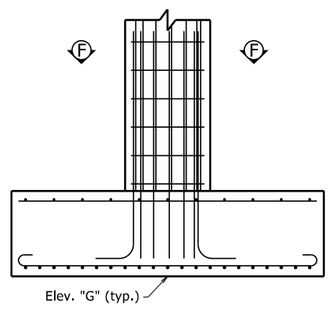

ELEVATION
Looking Ahead

For "SECTION B-B", "SECTION C-C", "VIEW D-D", "SECTION E-E" and "SECTION F-F", see Dwg. No. 64511.

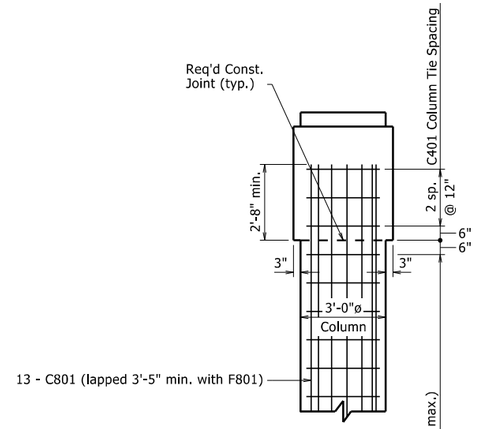

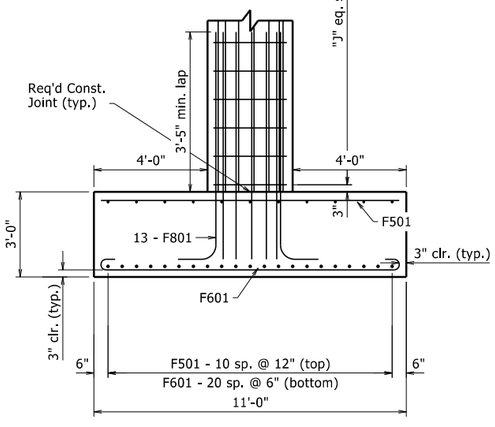

SECTION A-A

TABLE OF VARIABLES

BENT	ELEV. "A"	ELEV. "B"	ELEV. "C"	ELEV. "D"	ELEV. "E"
2	606.85	607.27	607.43	607.57	607.44
3	606.71	607.22	607.36	607.48	607.32

BENT	ELEV. "F"	ELEV. "G"	"H"	"J"	"K"
2	607.27	584.77	15'-1"	15	22'-6"
3	607.13	586.21	13'-6"	13	20'-6"

STATE OF ARKANSAS
Charles R. Ellis
LICENSED PROFESSIONAL ENGINEER
No. 9235
9/22/23
CHARLES R. ELLIS
BRIDGE ENGINEER

SHEET 1 OF 3
DETAILS OF INTERMEDIATE BENTS
SCHOOL HOUSE BRANCH

ROUTE SEC.

ARKANSAS STATE HIGHWAY COMMISSION
LITTLE ROCK, ARK.

DRAWN BY: BAB DATE: 7/20/21
CHECKED BY: DPT DATE: 8/24/2021
DESIGNED BY: BAB DATE: 6/2021
FILENAME: b040792x1_b2.dgn
SCALE: ⅜" = 1'-0"

BRIDGE NO. 07567 DRAWING NO. 64510

PRINT DATE: 9/22/2023

DATE REVISED	DATE FILMED	DATE REVISED	DATE FILMED	FED. ROAD DIST. NO.	STATE	FED. AID PROJ. NO.	SHEET NO.	TOTAL SHEETS
				6	ARK.			
				JOB NO.		040792	75	122
				1	07567 - INTERMEDIATE BENTS - 64511			

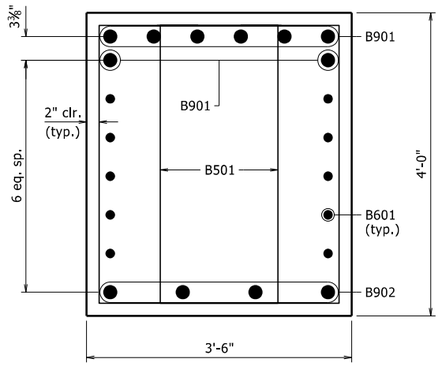

SECTION B-B
1" = 1'-0"

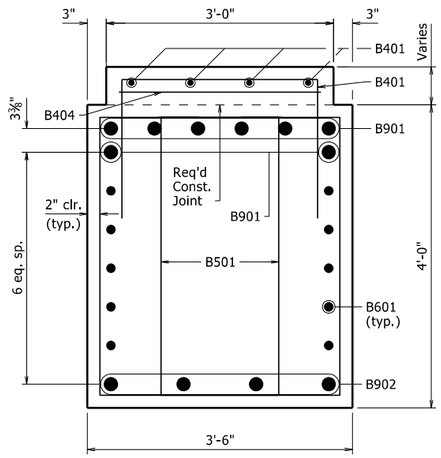

SECTION C-C
1" = 1'-0"

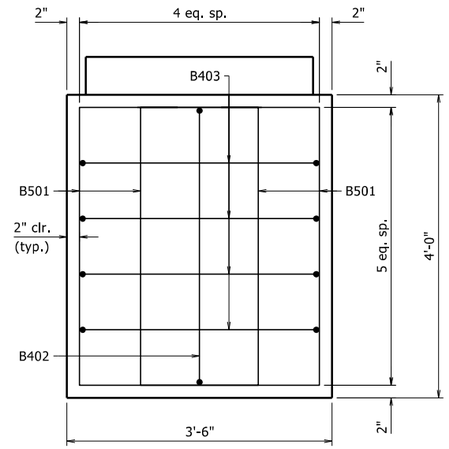

VIEW D-D
1" = 1'-0"

NOTE:
Longitudinal cap bars not shown for clarity.

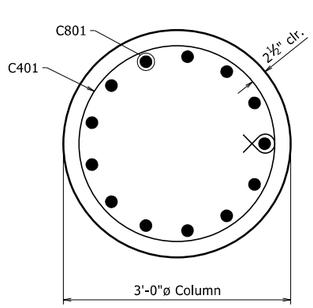

SECTION E-E
1" = 1'-0"

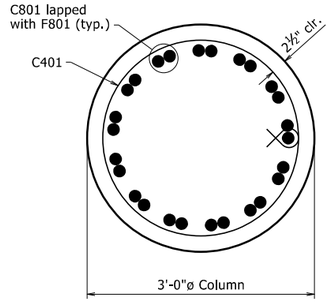

SECTION F-F
1" = 1'-0"

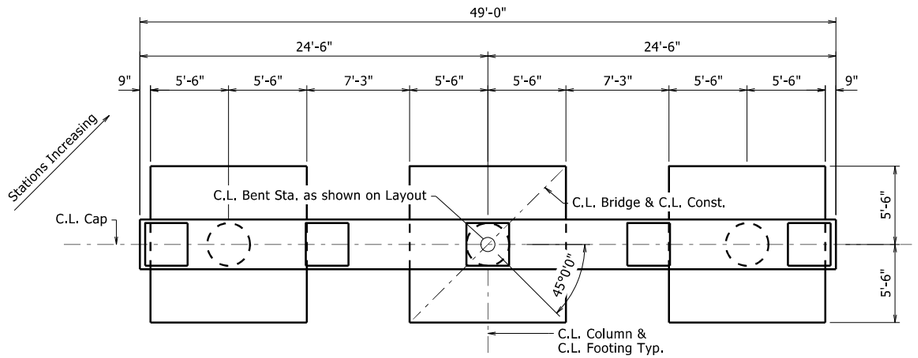

FOUNDATION PLAN
3/16" = 1'-0"

STATE OF ARKANSAS
Charles R. Ellis
LICENSED PROFESSIONAL ENGINEER
No. 9235
9/22/23
CHARLES R. ELLIS

BRIDGE ENGINEER

SHEET 2 OF 3
DETAILS OF INTERMEDIATE BENTS
SCHOOL HOUSE BRANCH

ROUTE SEC.

ARKANSAS STATE HIGHWAY COMMISSION
LITTLE ROCK, ARK.

DRAWN BY: BAB DATE: 7/20/2021
CHECKED BY: DPT DATE: 8/24/2021
DESIGNED BY: BAB DATE: 6/2021
FILENAME: b040792x1_b2.dgn
SCALE: As Shown

BRIDGE NO. 07567 DRAWING NO. 64511

PRINT DATE: 9/22/2023

DATE REVISED	DATE FILMED	DATE REVISED	DATE FILMED	FED. ROAD DIST. NO.	STATE	FED. AID PROJ. NO.	SHEET NO.	TOTAL SHEETS
				6	ARK.			
				JOB NO.		040792	76	122
				(1)	07567 - INTERMEDIATE BENTS - 64512			

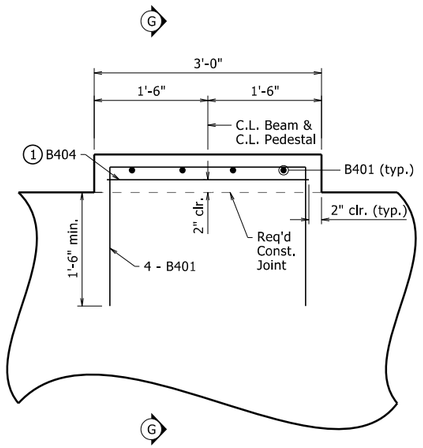

TYPICAL PEDESTAL
1" = 1'-0"

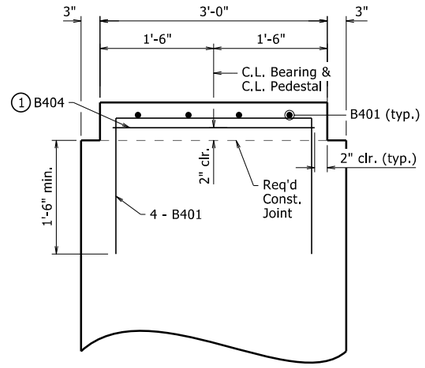

SECTION G-G
1" = 1'-0"

(1) Exclude from exterior pedestals.

For Details of elastomeric bearings, See Dwg. No. 64513.

BAR LIST - PER BENT

MARK	NO. REQ'D	LENGTH	P.D.
B401	40	6'-9"	2"
B402	2	4'-9"	2"
B403	8	4'-3"	2"
B404	3	11'-0"	2"
B501	116	12'-8"	2½"
B502	24	9'-6"	2½"
B601	10	48-8"	Str.
B901	8	51'-2"	9"
B902	4	48'-8"	Str.
C401	"X"	9'-3"	3"
C801	39	"Z"	Str.
F501	66	10'-6"	Str.
F601	126	11'-10"	4½"
F801	39	9'-2"	6"

BENDING DIAGRAMS

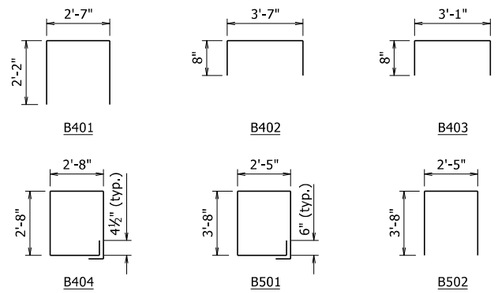

Dimensions are out to out of bars.

TABLE OF VARIABLES

BENT	"X"	"Z"
2	57	17'-9"
3	51	16'-2"

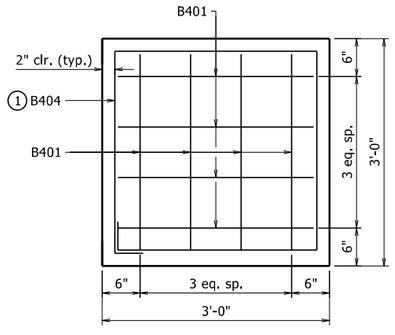

PEDESTAL PLAN
1" = 1'-0"

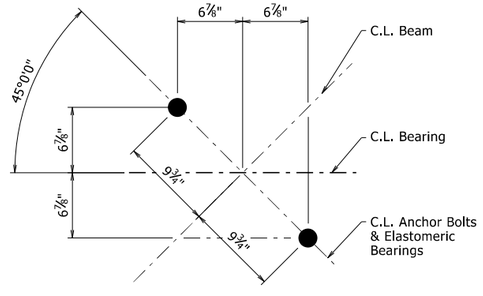

TYPICAL ANCHOR BOLT DETAIL
No Scale

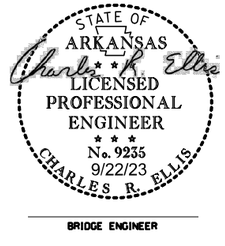

BRIDGE ENGINEER

SHEET 3 OF 3
DETAILS OF INTERMEDIATE BENTS
SCHOOL HOUSE BRANCH

ROUTE SEC.

ARKANSAS STATE HIGHWAY COMMISSION
LITTLE ROCK, ARK.

DRAWN BY: BAB DATE: 7/21/2021
CHECKED BY: DPT DATE: 8/24/2021
DESIGNED BY: BAB DATE: 6/2021
FILENAME: b040792x1_b2.dgn
SCALE: As Shown

BRIDGE NO. 07567 DRAWING NO. 64512

PRINT DATE: 9/22/2023

DATE REVISED	DATE FILMED	DATE REVISED	DATE FILMED	FED. ROAD DIST. NO.	STATE	FED. AID PROJ. NO.	SHEET NO.	TOTAL SHEETS
				6	ARK.			
				JOB NO.		040792	77	122
				① 07567 & 07568 - ELASTO. BEARINGS - 64513				

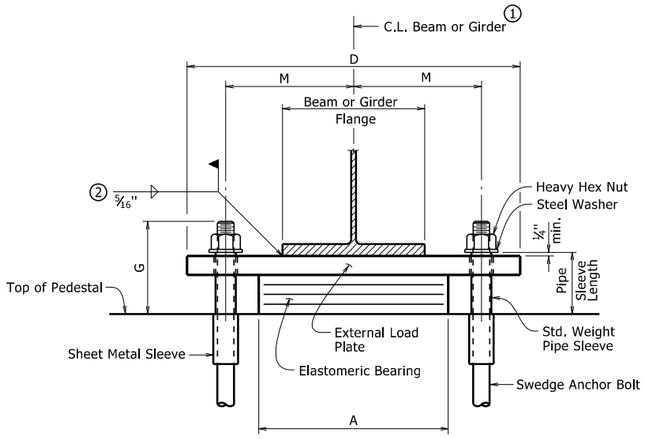

FRONT VIEW

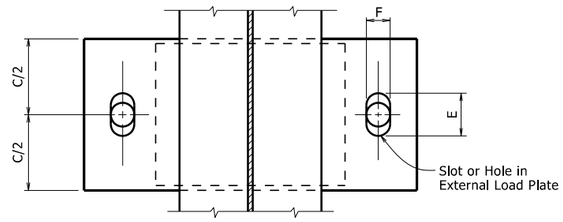

PLAN VIEW

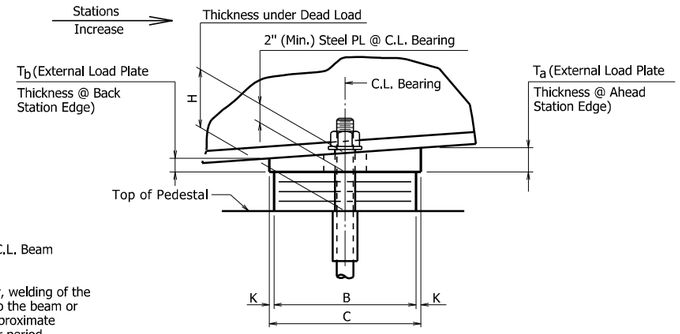

SIDE VIEW

① C.L. Elastomeric Pad shall be aligned with C.L. Beam or Girder.

② Unless otherwise approved by the Engineer, welding of the external load plate at expansion bearings to the beam or girder will be allowed only when: 1) the approximate average air temperature during the 24 hour period immediately preceding welding is between 40°F and 80°F; and 2) the slots in the external load plate are positioned to center on the anchor bolts; and 3) no horizontal deformation of the elastomeric pad is evident. If welding at other temperatures is required, the Engineer will provide adjustment data.

Care shall be taken to ensure that the external load plate is in full and complete contact with the beam or girder flange before welding begins.

The direction of bevel of the external load plate may not be accurately depicted with respect to Ta and Tb values shown in the "Table of Fabricator Variables".

Prior to erection of the beams or girders, the Contractor shall verify the orientation of the bearing with respect to Ta and Tb.

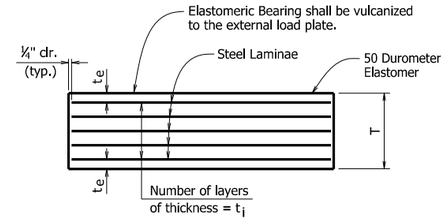

t_e = Thickness of elastomer cover on top and bottom of pad

t_i = Thickness of elastomer between steel laminae

N = Number of elastomer layers of thickness t_i

ELASTOMERIC BEARING

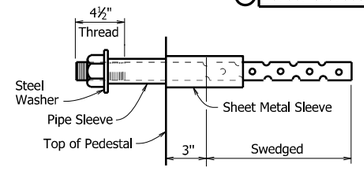

ANCHOR BOLT DETAIL

Anchor Bolts may be cast in place or drilled and grouted into place. If Anchor Bolts are to be cast in place, the Galvanized Sheet Metal Sleeves will not be required.

If Anchor Bolts are to be drilled and grouted in place, the Galvanized Sheet Metal Sleeves shall be cast in place as shown. Sleeves shall be dry packed with styrofoam, urethane foam or approved equal prior to pouring of concrete. After pouring of the cap and prior to erection of Structural Steel, the dry pack shall be removed and holes for the anchor bolts shall be accurately drilled into the concrete. Bolts placed in drilled holes shall be accurately set and fixed using a QPL-approved epoxy or non-shrink grout that completely fills the holes. Galvanized Sheet Metal Sleeves shall meet the requirements of ASTM 653, CS Type B or approved equivalent, be of minimum 16 gage thickness, and be galvanized according to ASTM B695, Class 50. Sheet Metal Sleeves will not be paid for directly, but will be considered subsidiary to the item "Structural Steel in Beam Spans (A709, Gr. 50W)".

GENERAL NOTES

Elastomeric Bearings shall conform to Section 808 and shall be paid for at the unit price bid for "Elastomeric Bearings".

External load plates and shear blocks shall conform to ASTM A709, Grade 50W. Pipe sleeves shall be ASTM A500, Grade B, and shall be galvanized to conform to AASHTO M 232, Class C or ASTM B695, Class 50.

External load plates and shear blocks shall be completely fabricated (including bevel, bolt holes and all shop welding) and shall be cleaned before vulcanizing to the elastomeric bearing. The surface in contact with the elastomeric bearing shall be cleaned in accordance with Subsection 808.03. Other surfaces shall be blast cleaned in accordance with Subsection 807.84(b) for painted steel.

Anchor Bolts, Washers and Nuts shall conform to Subsection 807.07. The anchor bolt grade of steel shall be as specified in the "Table of Fabricator Variables". Indentations shall be circular with rounded bottoms and staggered as shown in the details.

Pipe Sleeves, Anchor Bolts, Washers and Nuts shall be paid for at the unit price bid for "Structural Steel in Beam Spans (A709, Gr. 50W)", External load plates and shear blocks will not be measured or paid for separately, but will be considered incidental to the unit price bid for "Elastomeric Bearings".

Bearings shall be seated in accordance with Subsection 808.08. This work and materials are considered subsidiary to the item "Elastomeric Bearings" and will not be paid for directly.

TABLE OF FABRICATOR VARIABLES

③ Maximum Design Load = Service 1 Limit State

BRIDGE NO.	LOCATION BENT NO(S).	LOCATION BEAM OR GIRDER NO.	BEARING TYPE	NO. of BEARINGS EACH BENT	③MAXIMUM DESIGN LOAD (KIPS)	G	H	ELASTOMERIC PAD A	B	N	t_i	t_e	NO. & THICKNESS OF STEEL LAMINAE	T	EXTERNAL LOAD PLATE C	D	E	F	K	M	T_a	T_b	ANCHOR BOLT (Ø x L)	GRADE	PIPE SLEEVE SIZE (Ø x L)	SHEET METAL SLEEVE SIZE (Ø x L)	STEEL WASHER SIZE (O.D.)
07567	1	All	Exp.	5	108	7¼"	4⅜"	11½"	10"	3	½"	¼"	4 @ 12 ga.	2 7/16"	11"	22"	3¾"	2¼"	½"	8¼"	2.02"	1.99"	1½"ø x 27"	55	1½"ø x 4⅜"	3"ø x 16"	3"
	2	All	Fix	5	212	7¼"	3 13/16"	14"	14"	2	½"	¼"	3 @ 12 ga.	1 13/16"	15"	26"	3⅛"	3⅛"	½"	9¾"	2.00"	2.00"	2"ø x 32"	55	2½"ø x 4⅛"	4"ø x 16"	3¾"
	3	All	Fix	5	212	7¼"	3 13/16"	14"	14"	2	½"	¼"	3 @ 12 ga.	1 13/16"	15"	26"	3⅛"	3⅛"	½"	9¾"	1.98"	2.02"	2"ø x 32"	55	2½"ø x 4⅛"	4"ø x 16"	3¾"
	4	All	Exp.	5	108	7¼"	4⅜"	11½"	10"	3	½"	¼"	4 @ 12 ga.	2 7/16"	11"	22"	3¾"	2¼"	½"	8¼"	1.97"	2.04"	1½"ø x 27"	55	1½"ø x 4⅜"	3"ø x 16"	3"
07568	2	All	Fix	5	185	7¼"	3 13/16"	13"	13"	2	½"	¼"	3 @ 12 ga.	1 13/16"	14"	25"	3⅛"	3⅛"	½"	9¼"	2.00"	2.00"	2"ø x 32"	55	2½"ø x 4⅛"	4"ø x 16"	3¾"
	3	All	Fix	5	185	7¼"	3 13/16"	13"	13"	2	½"	¼"	3 @ 12 ga.	1 13/16"	14"	25"	3⅛"	3⅛"	½"	9¼"	2.00"	2.00"	2"ø x 32"	55	2½"ø x 4⅛"	4"ø x 16"	3¾"

PRINT DATE: 9/22/2023

STATE OF ARKANSAS
Charles R. Ellis
LICENSED PROFESSIONAL ENGINEER
No. 9235
9/22/23
CHARLES R. ELLIS
BRIDGE ENGINEER

DETAILS OF ELASTOMERIC BEARINGS

ROUTE SEC.

ARKANSAS STATE HIGHWAY COMMISSION

LITTLE ROCK, ARK.

DRAWN BY: BAB DATE: 8/18/2021 FILENAME: b040792x1_e1.dgn

CHECKED BY: DPT DATE: 8/19/2021 SCALE: NO SCALE

DESIGNED BY: BAB DATE: 3/16/2021

BRIDGE NO. 07567 & 07568 DRAWING NO. 64513

DATE REVISED	DATE FILMED	DATE REVISED	DATE FILMED	FED. ROAD DIST. NO.	STATE	FED. AID PROJ. NO.	SHEET NO.	TOTAL SHEETS
				6	ARK.			
				JOB NO.		040792	78	122
				①	07567 - SPAN DETAILS - 64514			

Slab Reinforcing
Longitudinal: S401E in bottom (as shown) and S501E in top (as shown)
S502E as shown over int. supports, see "REINFORCING PLAN & POURING SEQUENCE", Dwg. No. 64516.

Transverse: S503E @ 6" o.c. top and bottom
S504E @ 6" o.c. in top of overhangs (bundled with S503E)

① Tolerance Minus = ¼"
Plus = to the amount of slab thickness used to meet slab thickness tolerance
See "ADJUSTMENT FOR SLAB THICKNESS TOLERANCE" on Std. Dwg. No. 55007.

② See "ADJUSTMENT FOR SLAB THICKNESS TOLERANCE" on Std. Dwg. No. 55007

③ See "ROUNDING DETAIL", Std. Dwg. No. 55007

④ Working point to gutterline.

Bar positions and clearances from the forms shall be maintained by means of stays, ties, hangers, or other approved devices sufficient in size and number to prevent displacement during construction, per Subsection 804.06. Placement of slab bolsters or hi-chairs with full-length lower runners directly on removable deck forms will not be allowed.

Class 2 Protective Surface Treatment shall be applied to the roadway surface, roadway face, & top of the concrete bridge rail.

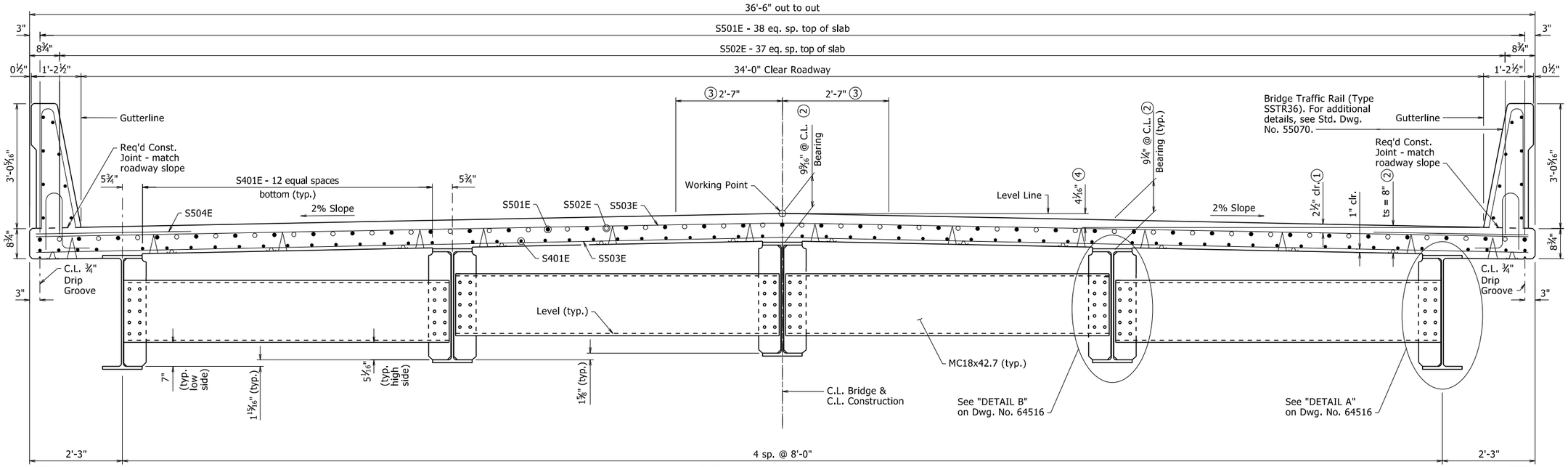

TYPICAL ROADWAY SECTION

LOOKING AHEAD

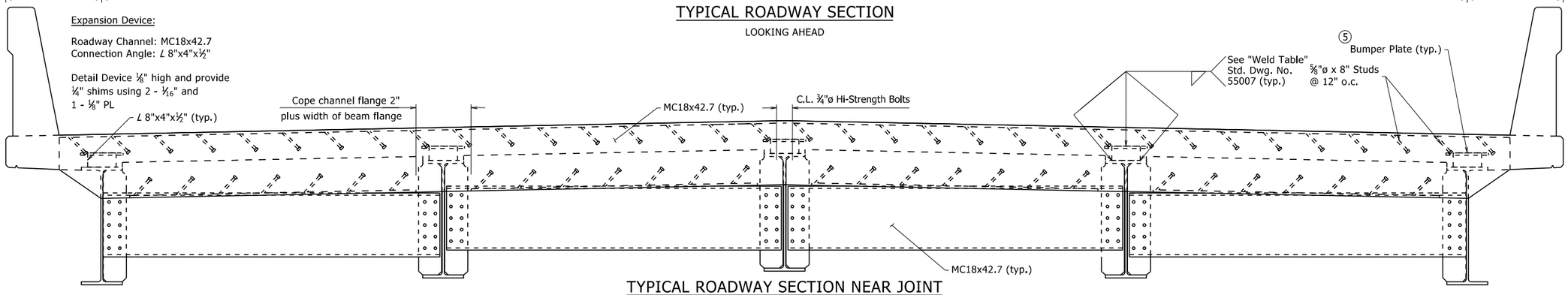

TYPICAL ROADWAY SECTION NEAR JOINT

LOOKING AHEAD

⑤ See "SILICONE JOINT DATA" on Dwg. No. 64517 for dimensions.

STATE OF ARKANSAS
Charles R. Ellis
LICENSED PROFESSIONAL ENGINEER
No. 9235
9/22/23
CHARLES R. ELLIS
BRIDGE ENGINEER

SHEET 1 OF 4
DETAILS OF 185'-0"
CONTINUOUS W-BEAM UNIT
SCHOOL HOUSE BRANCH

ROUTE SEC.

ARKANSAS STATE HIGHWAY COMMISSION
LITTLE ROCK, ARK.

DRAWN BY: BAB DATE: 2/22/2021 FILENAME: b040792x1_s1.dgn
CHECKED BY: DPT DATE: 6/4/2021 SCALE: ¾" = 1'-0"
DESIGNED BY: BAB DATE: 2/1/2021

BRIDGE NO. 07567 DRAWING NO. 64514

PRINT DATE: 9/22/2023

DATE REVISED	DATE FILMED	DATE REVISED	DATE FILMED	FED. ROAD DIST. NO.	STATE	FED. AID PROJ. NO.	SHEET NO.	TOTAL SHEETS
				6	ARK.			
				JOB NO.		040792	79	122

07567 - SPAN DETAILS - 64515

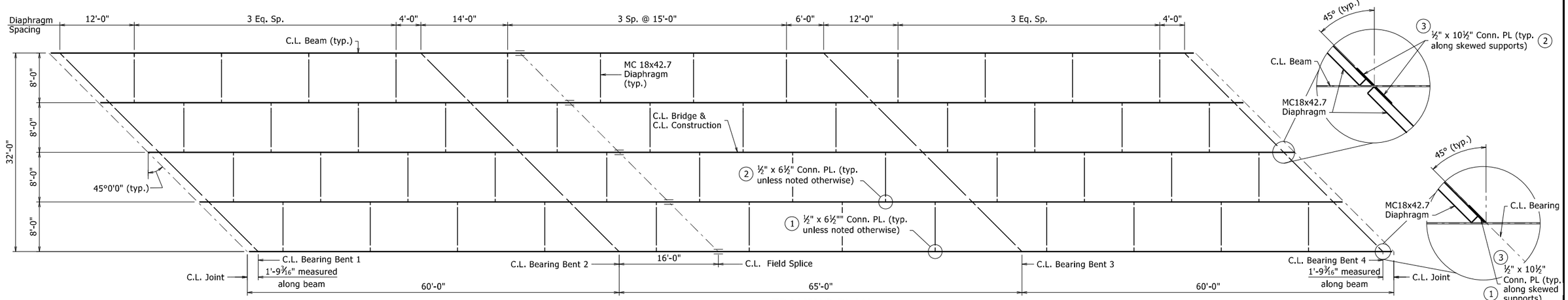

FRAMING PLAN

⅛" = 1'-0"

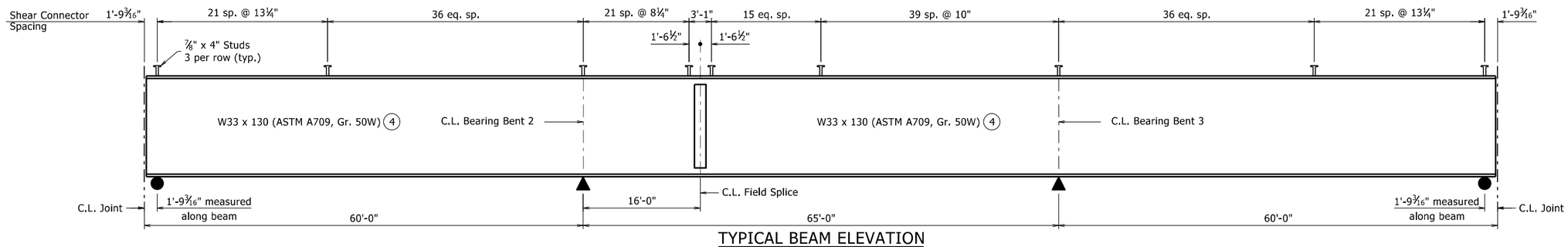

TYPICAL BEAM ELEVATION

⅛" = 1'-0"

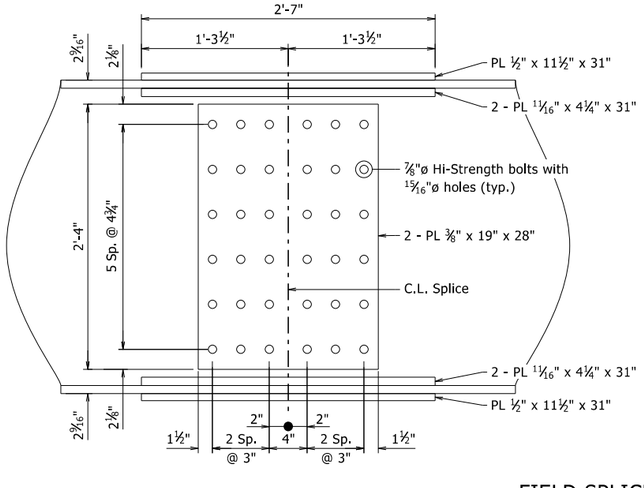

Web Splice

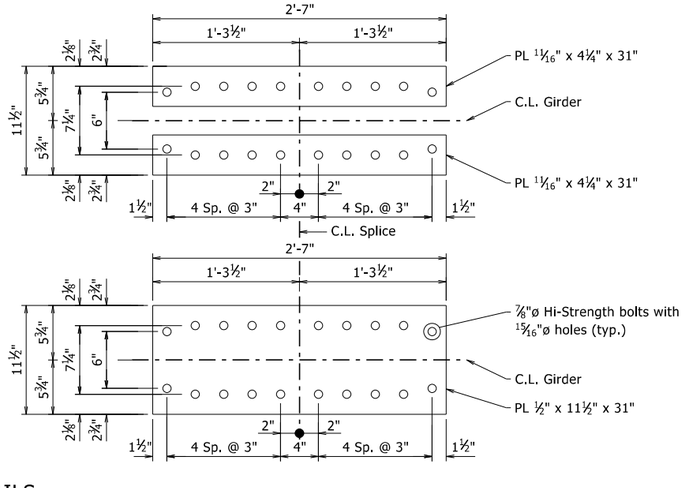

Flange Splice

FIELD SPLICE DETAILS

1½" = 1'-0"

NOTES:
All structural steel shall be ASTM A709, Gr. 50W unless otherwise noted and shall be paid for as "Structural Steel in Beam Spans (A709, Gr. 50W)".

Bolted field splices may be eliminated or shop welded splices may be substituted with the approval of the Engineer. Payment will be made on the basis of plan quantities.

See Layout and Std. Dwg. Nos. 55006 and 55007 for additional notes and details.

1. See Detail A on Dwg. No. 64516.
2. See Detail B on Dwg. No. 64516.
3. See Detail Z on Dwg. No. 64516.
4. For Painting of Beam Ends, see General Notes on Layout Dwg. No. 64504.

STATE OF ARKANSAS
Charles R. Ellis
LICENSED PROFESSIONAL ENGINEER
No. 9235
9/22/23
CHARLES R. ELLIS
BRIDGE ENGINEER

SHEET 2 OF 4
DETAILS OF 185'-0"
CONTINUOUS W-BEAM UNIT
SCHOOL HOUSE BRANCH

ROUTE SEC.

ARKANSAS STATE HIGHWAY COMMISSION
LITTLE ROCK, ARK.

DRAWN BY:	BAB	DATE:	2/22/2021	FILENAME:	b040792x1_s1.dgn
CHECKED BY:	DPT	DATE:	6/4/2021	SCALE:	As Shown
DESIGNED BY:	BAB	DATE:	2/1/2021		

BRIDGE NO. 07567 DRAWING NO. 64515

PRINT DATE: 9/22/2023

DATE REVISED	DATE FILMED	DATE REVISED	DATE FILMED	FED. ROAD DIST. NO.	STATE	FED. AID PROJ. NO.	SHEET NO.	TOTAL SHEETS
				6	ARK.			
				JOB NO.		040792	80	122
				①		07567 - SPAN DETAILS - 64516		

Slab Pouring Sequence Notes:
Pours with the same number may be placed simultaneously or separately. All Pours (1) must be placed before Pour (2) can be placed. Pour (2) must be placed before Pours (3) can be placed. 48 hours shall elapse between the end of a pour and the start of the next pour. 72 hours shall elapse between adjacent pours. The Contractor must obtain approval from the Engineer for any deviations from the pouring sequence shown.

Concrete in bridge superstructure shall be placed, consolidated, and screeded off for the entire pour before any concrete has taken its inital set. This may require the use of a retarding agent.

A minimum of 72 hours shall elapse between completion of the slab and the pouring of the bridge railing. Any railing pours made before the entire slab unit has been placed must be approved by the Engineer.

Required slab joints and pouring sequence construction joints shall align with bridge rail joints.

(1) Placed as shown in "TYPICAL ROADWAY SECTION", Dwg. No. 64514.

(2) If permanent steel bridge deck forms are used, the Fabricator shall clip the plates as necessary to accomodate the deck form supports.

(3) See Std. Dwg. No. 55070 for additional details.

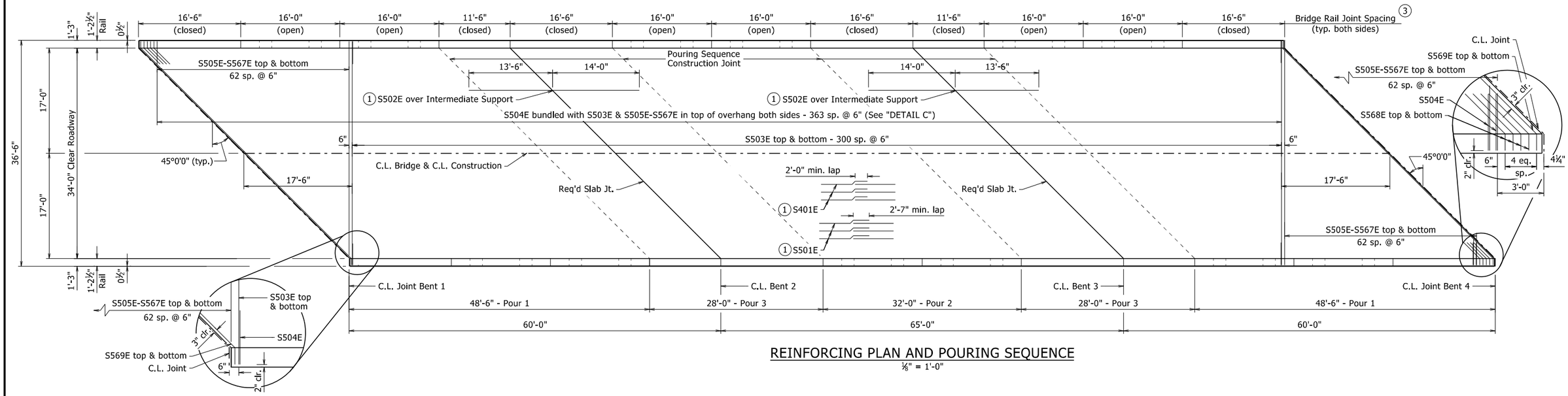

REINFORCING PLAN AND POURING SEQUENCE
⅛" = 1'-0"

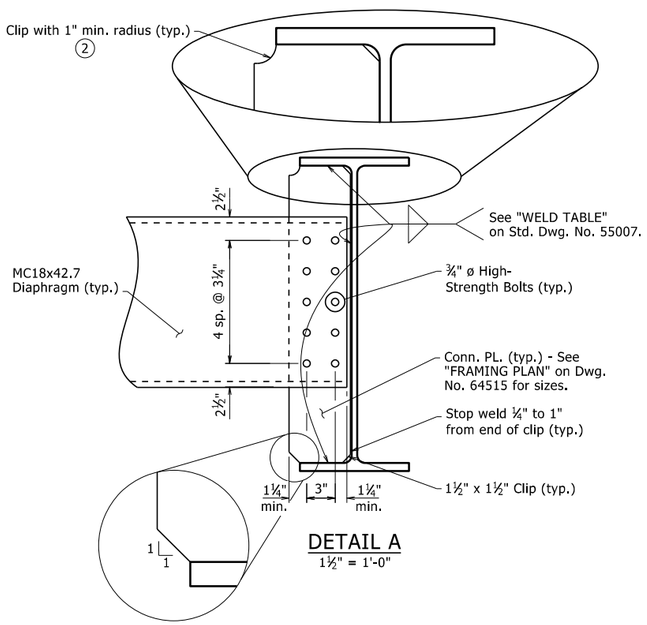

DETAIL A
1½" = 1'-0"

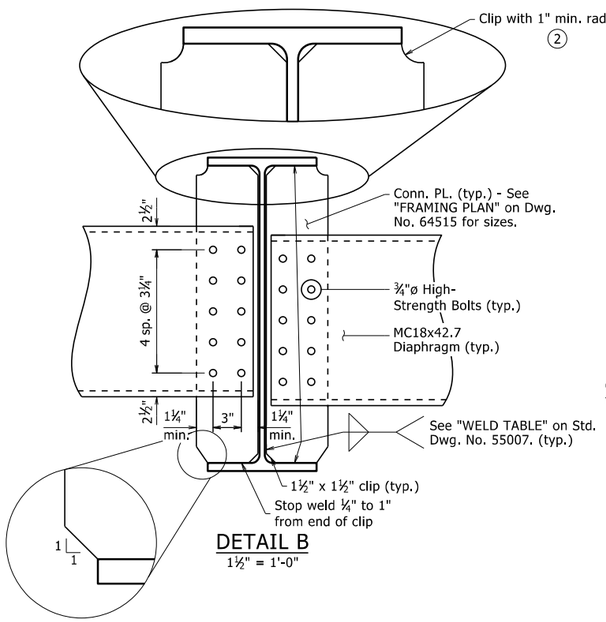

DETAIL B
1½" = 1'-0"

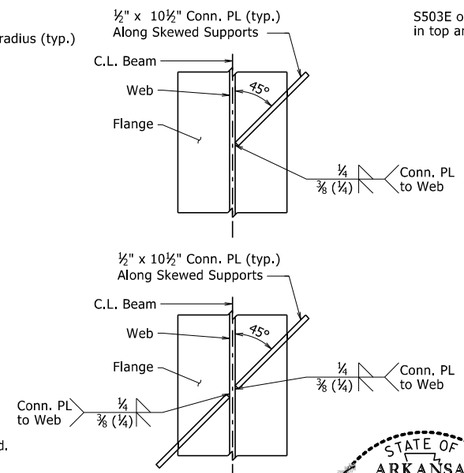

DETAIL Z
1½" = 1'-0"

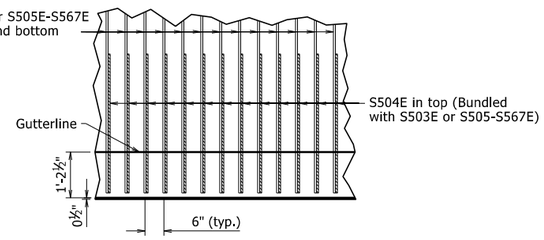

DETAIL C
½" = 1'-0"

STATE OF ARKANSAS
Charles R. Ellis
LICENSED PROFESSIONAL ENGINEER
No. 9235
9/22/23
CHARLES R. ELLIS

BRIDGE ENGINEER

SHEET 3 OF 4
DETAILS OF 185'-0"
CONTINUOUS W-BEAM UNIT
SCHOOL HOUSE BRANCH

ROUTE SEC.

ARKANSAS STATE HIGHWAY COMMISSION
LITTLE ROCK, ARK.

DRAWN BY: BAB DATE: 2/22/2021
CHECKED BY: DPT DATE: 6/4/2021
DESIGNED BY: BAB DATE: 2/1/2021
FILENAME: b040792x1_s1.dgn
SCALE: As Shown

BRIDGE NO. 07567 DRAWING NO. 64516

PRINT DATE: 9/22/2023

DATE REVISED	DATE FILMED	DATE REVISED	DATE FILMED	FED. ROAD DIST. NO.	STATE	FED. AID PROJ. NO.	SHEET NO.	TOTAL SHEETS
				6	ARK.			
				JOB NO.		040792	81	122
				①		07567 - SPAN DETAILS - 64517		

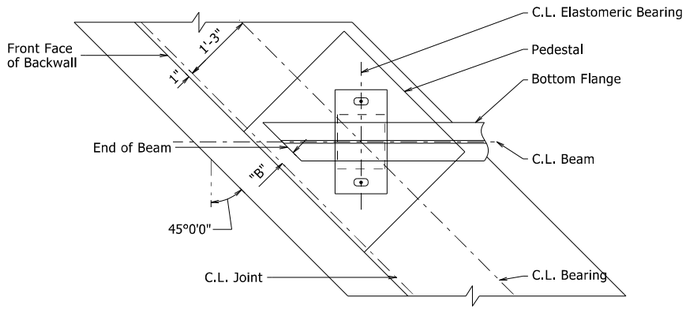

PLAN OF BEARING AT END BENT

NO SCALE

SILICONE JOINT DATA

"A" Width Perpendicular to Joint at 24 hour Average Temperature of:			"B" Perpendicular to Joint at 60°F	Bumper Plate Size
40°F	60°F	80°F		
2⅛"	2"	1⅞"	2¼"	1¼"x1¼"x12"

See Std. Dwg. No. 55008 for details of poured silicone joints.

TABLE OF VARIABLES

(for use with Std. Dwg. No. 55070)

Closed Rail Panels			Open Rail Panels					
Panel Length	A	R4XXE	Panel Length	B	C	D	E	R4XXE
11'-6"	22	R404E	16'-0"	8	3'-0"	11	6'-0"	R405E
16'-6"	32	R406E						

TABLE OF DEAD LOAD DEFLECTIONS (INCHES)

Span	Point of Deflection	Structural Steel		Structural Steel + Slab		Structural Steel + Slab + Rail	
		Ext. Beam	Int. Beam	Ext. Beam	Int. Beam	Ext. Beam	Int. Beam
Span 1	0.0	0.000	0.000	0.000	0.000	0.000	0.000
	0.1	0.035	0.039	0.204	0.257	0.226	0.270
	0.2	0.064	0.072	0.378	0.476	0.418	0.501
	0.3	0.085	0.096	0.501	0.630	0.554	0.663
	0.4	0.095	0.107	0.559	0.703	0.619	0.740
	0.5	0.093	0.105	0.549	0.691	0.608	0.727
	0.6	0.081	0.091	0.478	0.600	0.529	0.631
	0.7	0.061	0.069	0.358	0.451	0.396	0.475
	0.8	0.037	0.041	0.216	0.271	0.239	0.285
	0.9	0.014	0.016	0.082	0.103	0.091	0.108
½ Span 2	0.0	0.000	0.000	0.000	0.000	0.000	0.000
	0.1	0.001	0.001	0.007	0.009	0.008	0.009
	0.2	0.013	0.015	0.079	0.099	0.087	0.104
	0.3	0.028	0.032	0.165	0.207	0.183	0.218
	0.4	0.039	0.044	0.231	0.290	0.256	0.305
	0.5	0.043	0.049	0.255	0.321	0.282	0.338

Symmetric about Half-Point of Unit

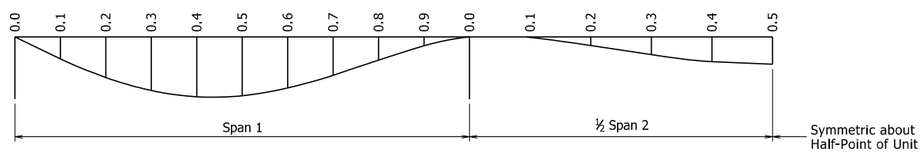

DEAD LOAD DEFLECTION DIAGRAM

Camber for Dead Load Deflection ± ¼" tolerance. Deflections shown are along C.L. beam/girder from a chord from C.L. Bearing to C.L. Bearing. Negative sign (-) indicates point above chord. Vertical curve corrections are not included.

BAR LIST

	MARK	NO. REQ'D	LENGTH	P.D.
①	R400E	96	5'-3"	2½"
①	R401E	716	6'-4"	2½"
①	R402E	72	5'-6"	Str.
①	R403E	716	3'-6"	3"
①	R404E	32	11'-2"	Str.
①	R405E	96	15'-8"	Str.
①	R406E	64	16'-2"	Str.
	S401E	300	38'-7"	Str.
	S501E	156	48'-2"	Str.
	S502E	76	27'-6"	Str.
	S503E	602	36'-2"	Str.
	S504E	728	3'-9"	Str.
	S505E - S567E	4 ea.	3'-9" - 34'-9"	Str.
	S568E	16	4'-6"	3¾"
	S569E	4	50'-3"	3¾"

BENDING DIAGRAMS

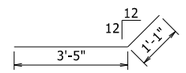

S568E

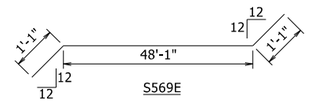

S569E

Dimensions are out to out of bars.
Bars with "E" suffix are to be epoxy coated.

①See Std. Dwg. 55070 for additional information.

STATE OF ARKANSAS
Charles R. Ellis
LICENSED PROFESSIONAL ENGINEER
No. 9235
9/22/23
CHARLES R. ELLIS

BRIDGE ENGINEER

SHEET 4 OF 4
DETAILS OF 185'-0"
CONTINUOUS W-BEAM UNIT
SCHOOL HOUSE BRANCH

ROUTE SEC.

ARKANSAS STATE HIGHWAY COMMISSION

LITTLE ROCK, ARK.

DRAWN BY: BAB DATE: 2/22/2021 FILENAME: b040792x1_s1.dgn
CHECKED BY: DPT DATE: 6/4/2021 SCALE: As Shown
DESIGNED BY: BAB DATE: 2/1/2021

BRIDGE NO. 07567 DRAWING NO. 64517

PRINT DATE: 9/22/2023

DATE REVISED	DATE FILMED	DATE REVISED	DATE FILMED	FED. ROAD DIST. NO.	STATE	FED. AID PROJ. NO.	SHEET NO.	TOTAL SHEETS
				6	ARK.			
				JOB NO.		040792	82	122
				①		07568 - LAYOUT - 64518		

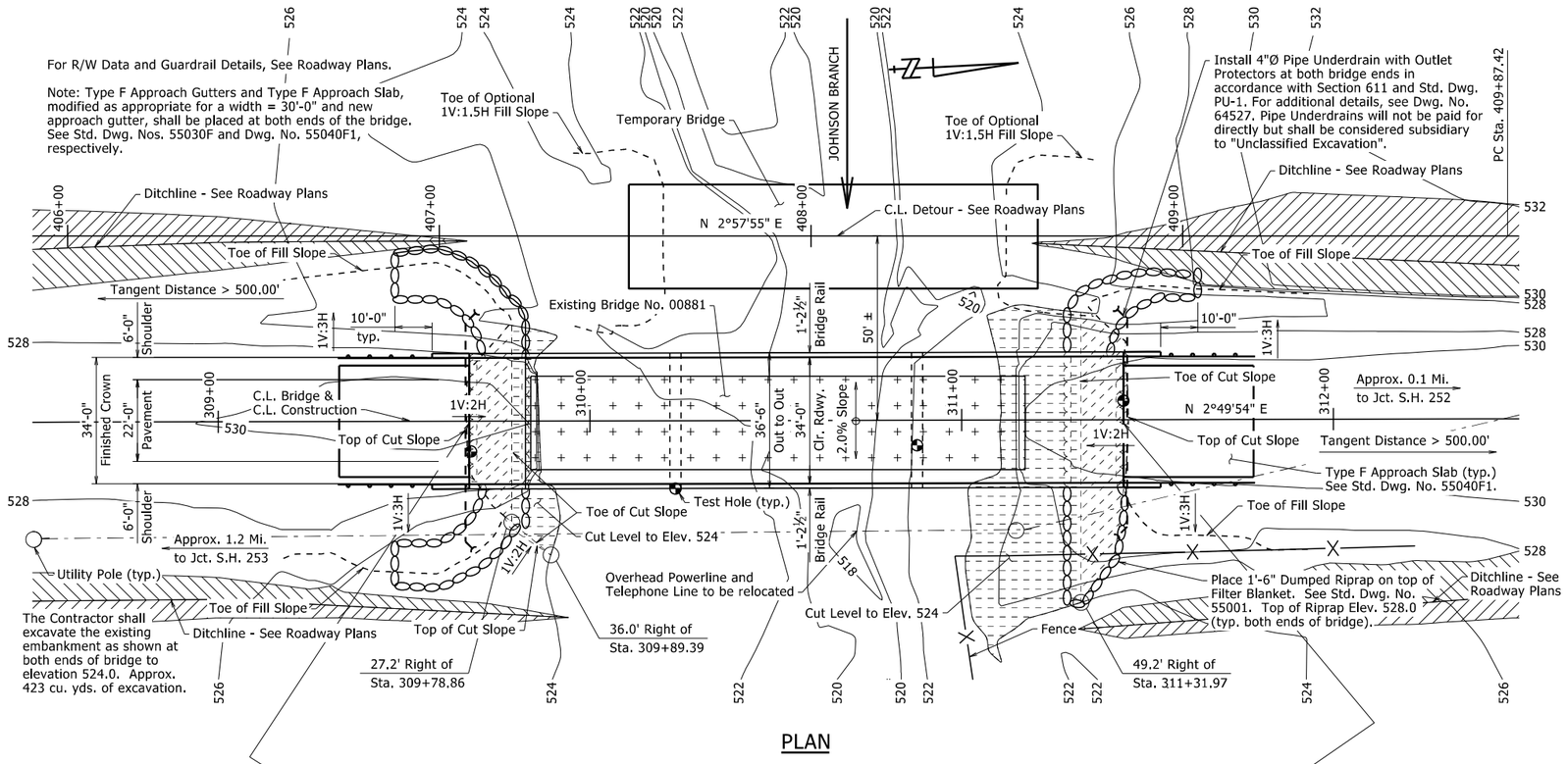

PLAN

HYDRAULIC DATA

FLOOD DESCRIPTION	FREQUENCY	DISCHARGE	NATURAL WATER SURFACE ELEVATION ①	WATER SURFACE ELEVATION WITH BACKWATER
	YEARS	CFS	FEET	FEET
Design	25	2840	527.4	528.0
Base	100	4190	528.5	529.4
Extreme	500	6020	530.2	531.2
Overtopping	>500	-	-	-

① Unconstricted water surface elevation without structure or roadway approaches.

Q100 backwater elevation for existing structure = 529.6 feet
Proposed Low Bridge Chord Elev. = 529.8 feet

Drainage Area = 6.43 square miles
Historical H.W. Elev. = N/A

Note:
Stations shown are taken along C.L. Construction. Elevations shown are theoretical working point elevations at C.L. Bridge. Any vertical dimension referenced to C.L. Deck is based on theoretical working point elevation at C.L. Bridge. See "Rounding Detail" on Standard Drawing number 55007 for additional information.

Bridge on Level Grade C.L. Deck Elev. 533.55 at working point.

See Dwg. No. 64519 for Soil Borings.

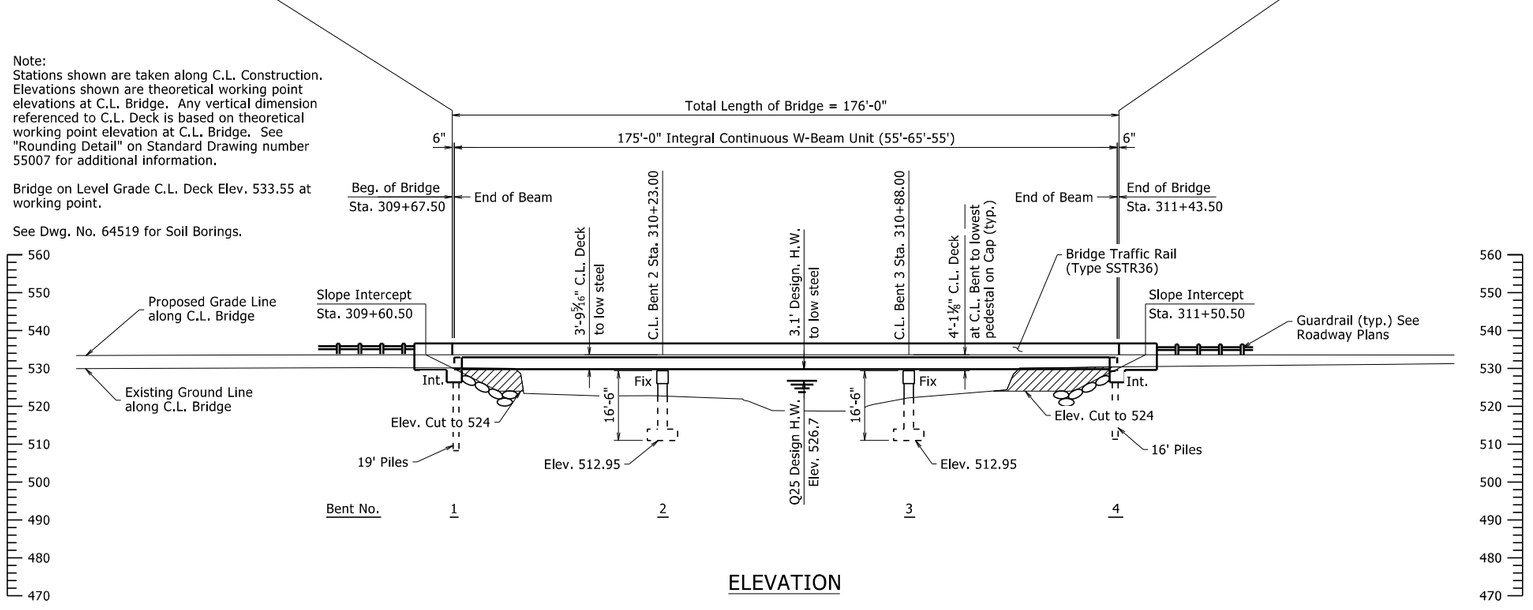

ELEVATION

PRINT DATE: 9/22/2023

STATE OF ARKANSAS
Charles R. Ellis
LICENSED PROFESSIONAL ENGINEER
No. 9235
9/22/23
CHARLES R. ELLIS
BRIDGE ENGINEER

SHEET 1 OF 2
LAYOUT OF BRIDGE
HIGHWAY 45 OVER JOHNSON BRANCH
HWY. 45 STRS. & APPRS. (S)
SEBASTIAN COUNTY

ROUTE 45 SEC. I

ARKANSAS STATE HIGHWAY COMMISSION

LITTLE ROCK, ARK.

DRAWN BY: DPT DATE: 3/31/2020 FILENAME: b040792x2_l1.dgn
CHECKED BY: JJ DATE: 9/22/2023 SCALE: 1" = 20' - 0"
DESIGNED BY: DPT DATE: 3/2020

BRIDGE NO. 07568 DRAWING NO. 64518

DATE REVISED	DATE FILMED	DATE REVISED	DATE FILMED	FED. ROAD DIST. NO.	STATE	FED. AID PROJ. NO.	SHEET NO.	TOTAL SHEETS
				6	ARK.			
				JOB NO.		040792	83	122
				07568 - LAYOUT - 64519				

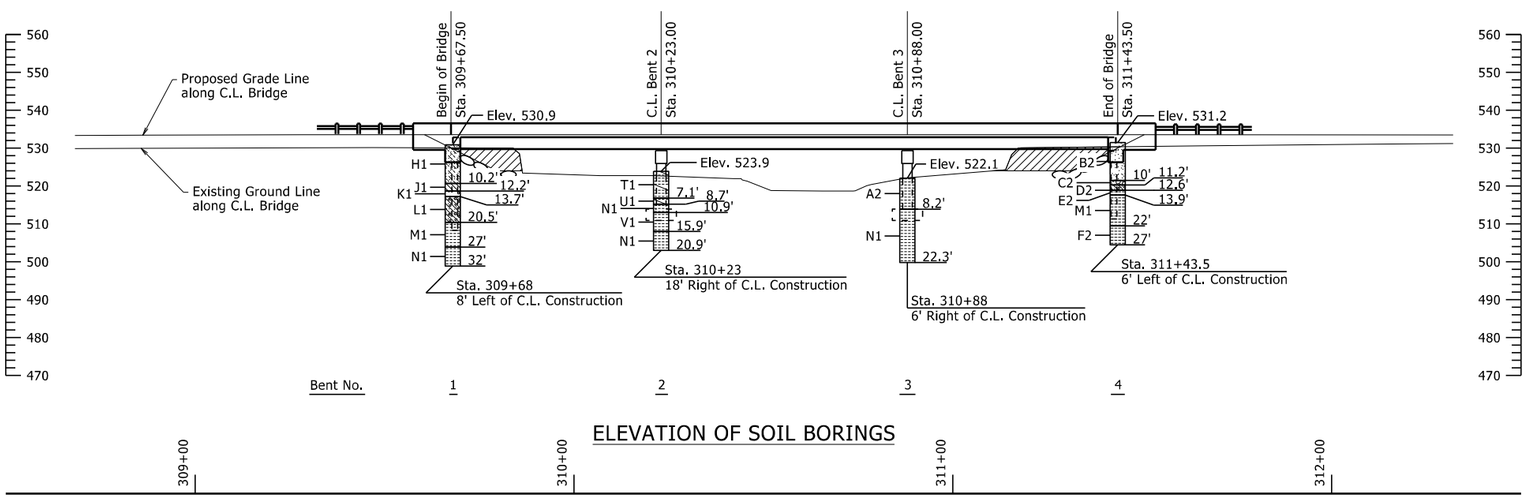

ELEVATION OF SOIL BORINGS

BORING LEGEND

A1-Moist, Very Loose, Brown Clayey Sand with Some Gravel
B1-Moist, Very Stiff, Brown Clay
C1-Dry, Dense, Dark Gray Shale Fragments
D1-Sandy Clay with Rock Fragments
E1-SHALE WITH OCCASIONAL SANDSTONE PARTINGS AND SEAMS - Slightly Weathered, Medium Hard, Dark Gray
F1-SHALE - Unweathered, Medium Hard, Dark Gray
G1-SHALE - Highly Weathered, Medium Hard, Brown and Gray
H1-SHALE - Weathered With Highly Weathered Layers, Medium Hard with Soft Layers, Brown and Gray
J1-SHALE - Unweathered, Medium Hard, Occasional Fractures, Dark Gray
K1-SHALE - Slighly Weathered, Medium Hard, Gray
L1-Moist, Very Loose, Brown Sand with Some Shale Fragments
M1-Dry, Very Dense, Dark Gray Shale Fragments and Boulders
N1-(No Recovery)
P1-SHALE WITH OCCASIONAL SANDSTONE PARTINGS AND SEAMS - Weathered, Medium Hard, Occasional Fractures
Q1-SHALE - Unweathered, Medium Hard, Occasional Fractures, Dark Gray

GENERAL NOTES:

BENCHMARK: Vertical Control Data are shown on the Survey Control Data Sheets.

CONSTRUCTION SPECIFICATIONS: Arkansas State Highway and Transportation Department Standard Specifications for Highway Construction (2014 edition) with applicable Supplemental Specifications and Special Provisions. Unless otherwise noted on the Plans, Section and Subsection refer to the Standard Construction Specifications.

DESIGN SPECIFICATIONS: AASHTO LRFD Bridge Design Specifications, Eighth Edition (2017).

LIVE LOADING: HL-93

SEISMIC ZONE: 1 S_{D1} = 0.051 SITE CLASS: C

SEISMIC OPERATIONAL CLASSIFICATION: Other

MATERIALS AND STRENGTHS:

Class S(AE) Concrete (Superstructure)	f'c = 4,000 psi
Class S Concrete (Substructure)	f'c = 3,500 psi
Reinforcing Steel (Grade 60, AASHTO M 31 or M 322, Type A)	fy = 60,000 psi
Structural Steel (ASTM A709, Gr. 50)	Fy = 50,000 psi
Structural Steel (ASTM A709, Gr. 50W)	Fy = 50,000 psi
Structural Steel (ASTM A709, Gr. 36)	Fy = 36,000 psi

BORING LOGS: Boring logs may be obtained from the Construction Contract Development Section of the Program Management Division.

STEEL PILING: All piling shall be HP 12x53(Grade 50) and shall be driven with an approved air, steam, or diesel hammer to a minimum safe bearing capacity of 95 tons per pile and into the material designated as shale on the boring legend. Minimum penetration shall be 15' below bottom of cap. Piling in end bents shall be driven after embankment to bottom of cap is in place. Lengths shown are for estimating quantities and for use in determining payment of cut-off and build-up in accordance with Section 805. The Contractor shall us approved steel H-Pile driving points on all piles.

PREBORING: Preboring is required for all piling at Bents 1 and 4. Preboring shall be to a minimum depth of 5' into material designated as shale on the boring legend to a depth of 15' below the bottom of the cap, whichever is lower. Prebored holes shall have a diameter 9" greater than the diagonal of the pile for a depth of 10' below the bottom of the cap. The size and depth of the remaining preboring shall be determined in the field by the Engineer. After driving is completed, the prebored holes shall be backfilled with Class S Concrete to within 10' of the bottom of the cap, and the remaining 10' shall be backfilled with sand or pea gravel. The Contractor shall be responsible for keeping prebored holes free of debris prior to driving piles and backfilling with may require the use of temporary casings or other approved methods. Any related cost for backfilling and temporary casing will not be paid for directly, but shall be considered subsidiary to the item "Preboring".

SPREAD FOOTINGS: Footings shall be set a minimum of 2' into material designated as shale on the boring legend. The top of the footings at Bents 2 and 3 shall be set a minimum 2' below the channel bottom as determined by the lowest channel elevation within the footprint of the footing. Foundations for footings shall be prepared in accordance with Subsection 801.04. Rock excavations shall be made to neat lines of the concrete footings. Care shall be exercised to avoid shattering rock faces by excessive blasting. Concrete in footings shall be poured directly against excavated surfaces of rock. Excavations shall be backfilled and compacted to the level of the existing ground in accordance with Subsection 801.08.

PAINTING: All steel surfaces within five feet of beam ends, including the section encased in concrete, shall be painted as specified in Subsection 807. All three coats in accordance with Subsection 807.76 will be required. ASTM F3125, Grade A325 Type 3 bolts shall be used within these painted zones and shall be painted.

Galvanized members and surfaces in contact with concrete shall not be painted unless otherwise noted above. The color of paint shall be Brown equal or close to Federal Std. 595B, Color Chip No. 30070 and as approved by the Engineer. The finish system may be applied in the shop. Any damage to the paint system occurring during transport or installation shall be corrected according to the manufacturer's recommendation at no cost to the Department.

BRIDGE DECK: The concrete bridge deck shall be given a tine finish as specified for final finishing in Subsection 802.19 for Class 5 Tined Bridge Roadway Surface Finish.

PROTECTIVE SURFACE TREATMENT: Class 2 Protective Surface Treatment shall be applied to the roadway surface and to the roadway face and top of the bridge traffic rails in accordance with Section 803.

DETAIL DRAWINGS	DRAWING NOS.
End Bents	64520
Intermediate Bents	64521 - 64522
Elastomeric Bearings	64513
175'-0" Integral Continuous W-Beam Unit	64523 - 64529
General Notes for Steel Bridge Structures	55006
Details for Steel Bridge Structures	55007
Steel H-Piling	55020
Bridge Traffic Rail	55070

EXISTING BRIDGE: Existing Bridge No. 00881 (Log Mile 6.73) is 25.2' wide (23.6' roadway) and 133' long and consists of seven precast channel beam unit spans. All spans are supported by concrete bents on concrete columns with footings.

REMOVAL AND SALVAGE: After detour alignment is open to traffic, the Contractor shall remove existing Bridge No. 00881 in accordance with Section 205. Excavation during construction of Bent 2 is expected to expose a portion of the spread footings. Removal of existing concrete footings and remnant concrete footings from previous structure, in whole or in part, as necessary, will be required to facilitate the construction of Bent 2. This work will not be paid for directly but shall be considered subsidiary to the item "Removal of Existing Bridge Structure (Site No.)." All material from the existing bridge shall become the property of the Contractor, except the following, at the Direction of the Engineer: three 19 foot precast channel beam units and seven 31 foot precast channel beam units that are in good condition shall become property of the State, which shall be protected and loaded onto State Trucks by the Contractor. This work shall be considered subsidiary to the item "Removal of Existing Bridge Structure (Site No.)."

TEMPORARY BRIDGE: Construct a minimum 110' long temporary bridge approximately 50' upstream with a minimum deck elevation of 529.75. See Roadway Plans for actual detour grade and alignment. The temporary bridge shall have a minimum roadway width of 24' and a minimum live load capacity of H15 in accordance with AASHTO Standard Specifications for Highway Bridges, 2002 Edition. See Section 603 and Standard Drawing Nos. 55054-55056 for standard temporary bridge details. If timber piling and pine timber are used on this temporary bridge structure, the materials shall be treated with a preservative in accordance with the Standard Specifications. If an optional design is used by the Contractor, a timber deck will not allowed.

MAINTENANCE OF TRAFFIC: See Roadway Plans.

"N" VALUES

Sta. 309+68 - 8' Left of C.L. Construction
5.9 - 6.9,N=4
10.7 - 11.7,N=16
12.7 - 13.7,N=50

Sta. 310+23 - 18' Right of C.L. Construction
5.6 - 6.3,N=100(8")

Sta. 310+88 - 6' Right of C.L. Construction
6.8 - 7.0,N=30(2")

Sta. 311+43.5 - 6' Left of C.L. Construction
5.7 - 6.7,N=4
10.5 - 11.2,N=58(8")

STATE OF ARKANSAS
Charles R. Ellis
LICENSED PROFESSIONAL ENGINEER
No. 9235
9/22/23
CHARLES R. ELLIS
BRIDGE ENGINEER

SHEET 2 OF 2
LAYOUT OF BRIDGE
HIGHWAY 45 OVER JOHNSON BRANCH
HWY. 45 STRS. & APPRS. (S)
SEBASTIAN COUNTY

ROUTE 45 SEC. I
ARKANSAS STATE HIGHWAY COMMISSION
LITTLE ROCK, ARK.

DRAWN BY: DPT DATE: 3/31/2020 FILENAME: b040792x2_l1.dgn
CHECKED BY: JJ DATE: 9/22/2023 SCALE: 1" = 20' - 0"
DESIGNED BY: DPT DATE: 3/2020

BRIDGE NO. 07568 DRAWING NO. 64519

PRINT DATE: 9/22/2023

DATE REVISED	DATE FILMED	DATE REVISED	DATE FILMED	FED. ROAD DIST. NO.	STATE	FED. AID PROJ. NO.	SHEET NO.	TOTAL SHEETS
				6	ARK.			
				JOB NO.		040792	84	122

1 07568 - END BENTS - 64520

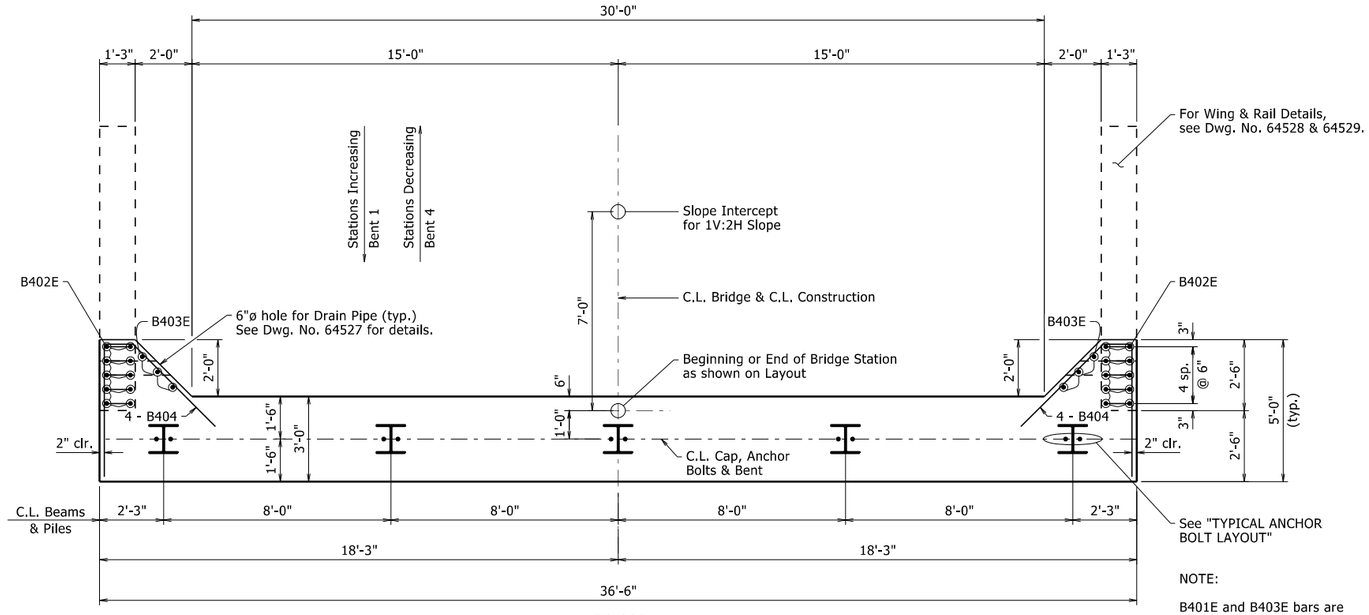

PLAN
3/8" = 1'-0"

NOTE:

B401E and B403E bars are to be embedded a minimum of 1'-6" into the cap.

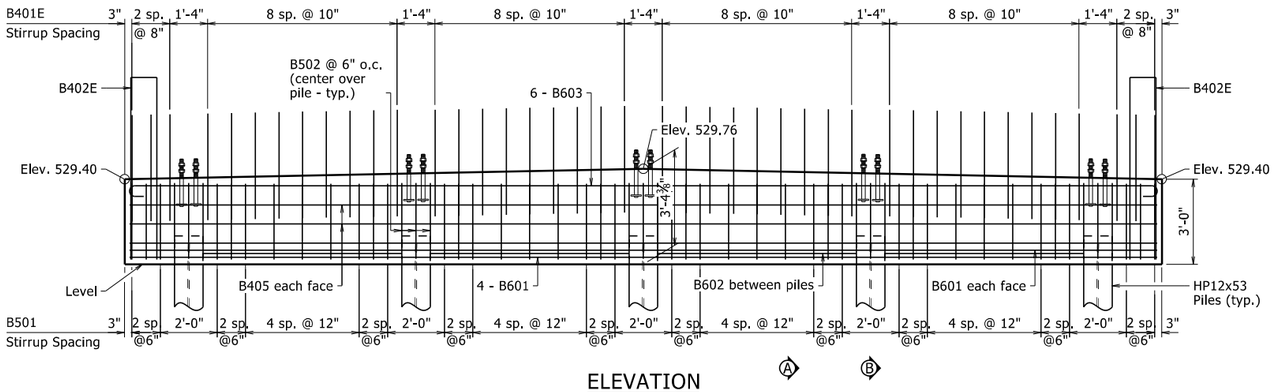

ELEVATION
LOOKING BACK BENT 1
LOOKING AHEAD BENT 4
3/8" = 1'-0"

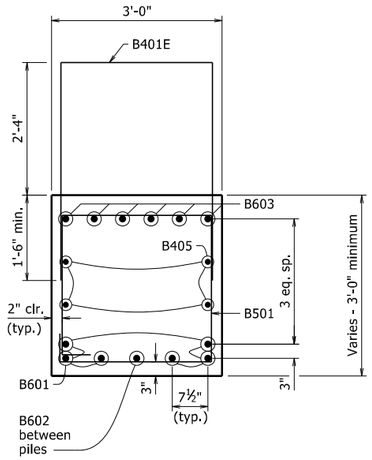

SECTION A-A
¾" = 1'-0"

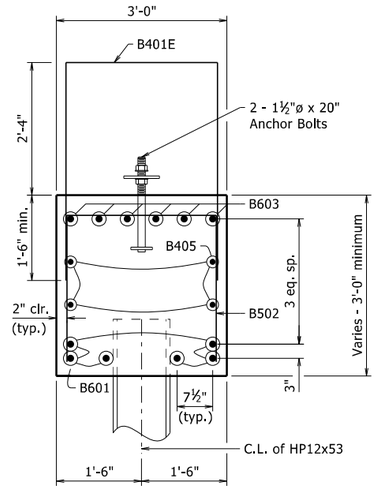

SECTION B-B
¾" = 1'-0"

BAR LIST - PER BENT

MARK	NO. REQ'D	LENGTH	P.D.
B401E	42	10'-2"	2"
B402E	10	13'-7"	2"
B403E	6	5'-2"	Str.
B404	8	9'-8"	2"
B405	4	36'-2"	Str.
B501	42	11'-0"	2½"
B502	15	7'-8"	2½"
B601	6	36'-2"	Str.
B602	4	7'-0"	Str.
B603	6	37'-6"	4½"

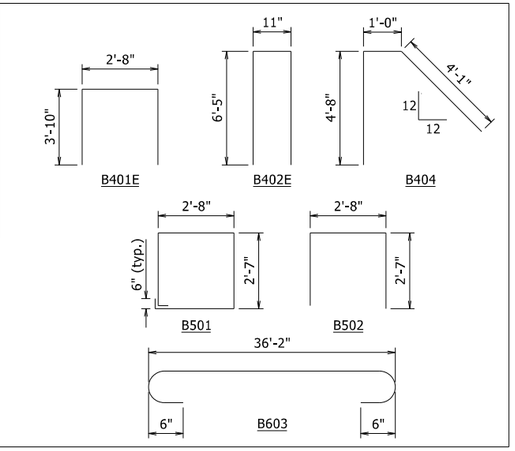

Dimensions are out to out of bars.
Bars with an "E" suffix are to be epoxy coated.

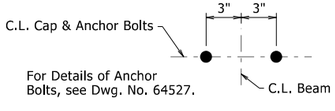

TYPICAL ANCHOR BOLT LAYOUT
NO SCALE

GENERAL NOTES:

See Std. Dwg. No. 55006 for additional notes.

For additional information, see Layout.

Granular backfill and pipe underdrain required behind cap. See Dwg. No. 64527 for details.

STATE OF ARKANSAS
Charles R. Ellis
LICENSED PROFESSIONAL ENGINEER
No. 9235
9/22/23
CHARLES R. ELLIS

BRIDGE ENGINEER

DETAILS OF END BENTS
JOHNSON BRANCH

ROUTE SEC.

ARKANSAS STATE HIGHWAY COMMISSION
LITTLE ROCK, ARK.

DRAWN BY: BAB DATE: 4/9/2021 FILENAME: b040792x2_b1.dgn
CHECKED BY: DPT DATE: 8/20/2021 SCALE: As Shown
DESIGNED BY: BAB DATE: 4/8/2021

BRIDGE NO. 07568 DRAWING NO. 64520

PRINT DATE: 9/22/2023

DATE REVISED	DATE FILMED	DATE REVISED	DATE FILMED	FED. ROAD DIST. NO.	STATE	FED. AID PROJ. NO.	SHEET NO.	TOTAL SHEETS
				6	ARK.			
				JOB NO.		040792	85	122
				①	07568 - INTERMEDIATE BENTS - 64521			

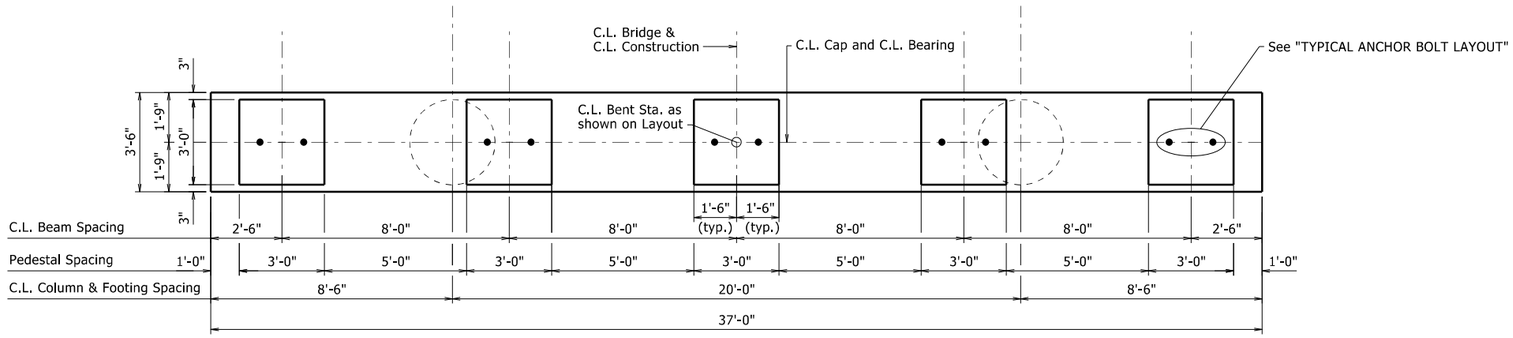

PLAN

3/8" = 1'-0"

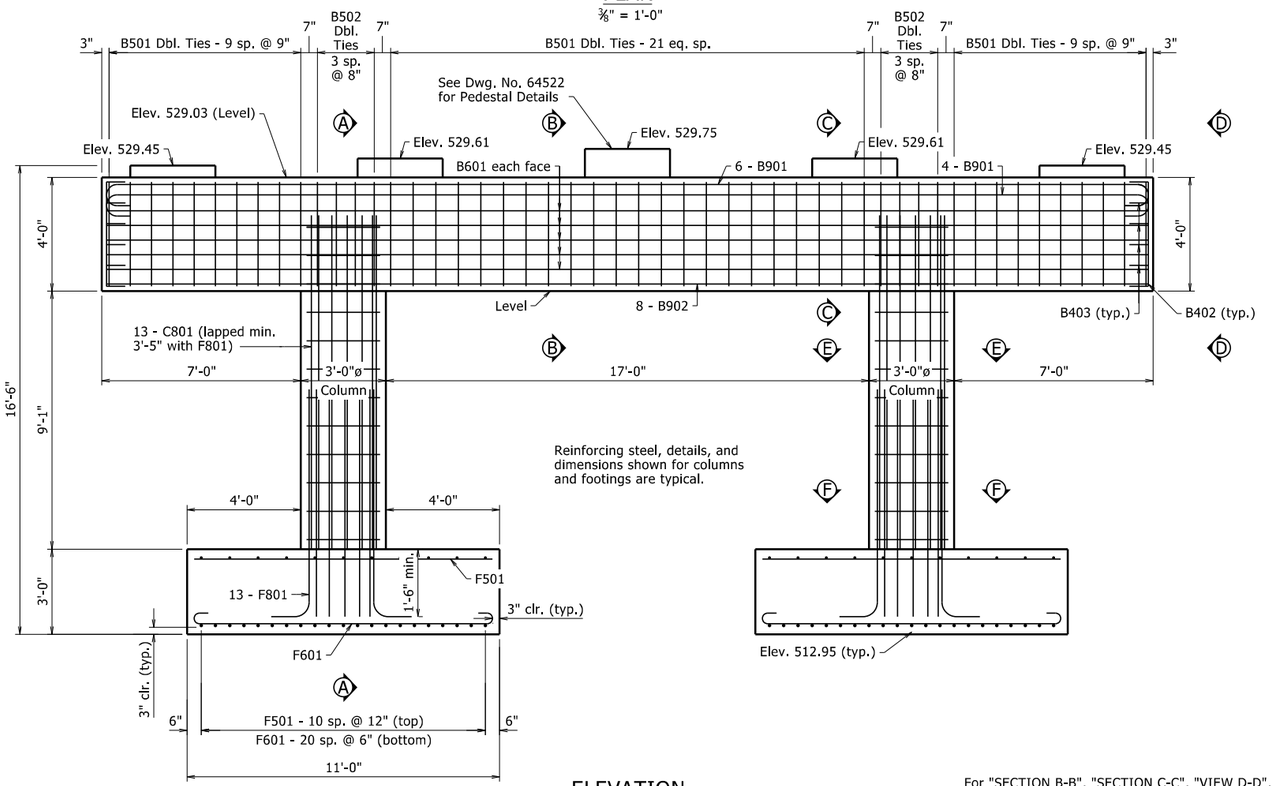

ELEVATION

Looking Ahead
3/8" = 1'-0"

For "SECTION B-B", "SECTION C-C", "VIEW D-D", "SECTION E-E" and "SECTION F-F", see Dwg. No. 64522.

For details of elastomeric bearings, See Dwg. No. 64513.

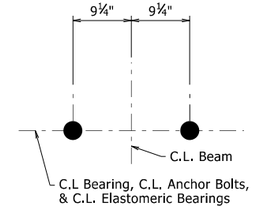

TYPICAL ANCHOR BOLT LAYOUT

NO SCALE

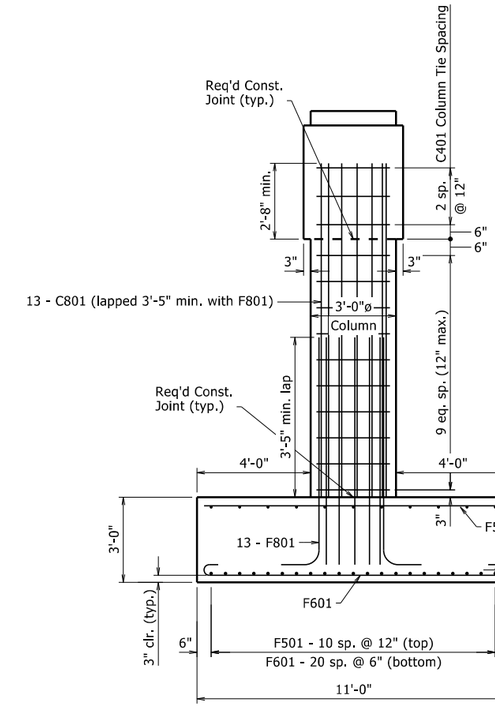

SECTION A-A

3/8" = 1'-0"

STATE OF ARKANSAS
Charles R. Ellis
LICENSED PROFESSIONAL ENGINEER
No. 9235
9/22/23
CHARLES R. ELLIS

BRIDGE ENGINEER

SHEET 1 OF 2
DETAILS OF INTERMEDIATE BENTS
JOHNSON BRANCH

ROUTE SEC.

ARKANSAS STATE HIGHWAY COMMISSION
LITTLE ROCK, ARK.

DRAWN BY:	BAB	DATE:	7/15/21	FILENAME:	b040792x2_b2.dgn
CHECKED BY:	DPT	DATE:	8/20/21	SCALE:	As Shown
DESIGNED BY:	BAB	DATE:	7/2021		

BRIDGE NO. 07568 DRAWING NO. 64521

PRINT DATE: 9/22/2023

DATE REVISED	DATE FILMED	DATE REVISED	DATE FILMED	FED. ROAD DIST. NO.	STATE	FED. AID PROJ. NO.	SHEET NO.	TOTAL SHEETS
				6	ARK.			
				JOB NO.		040792	86	122

① 07568 - INTERMEDIATE BENTS - 64522

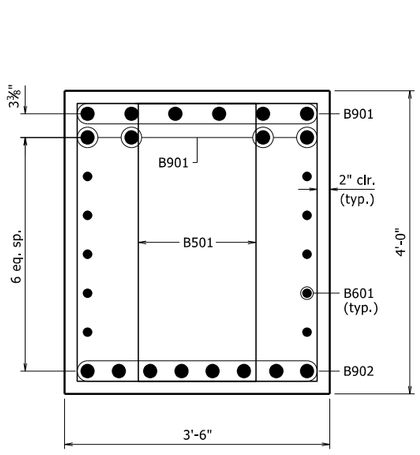

SECTION B-B

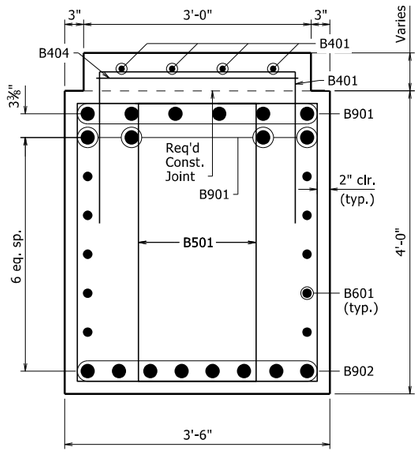

SECTION C-C

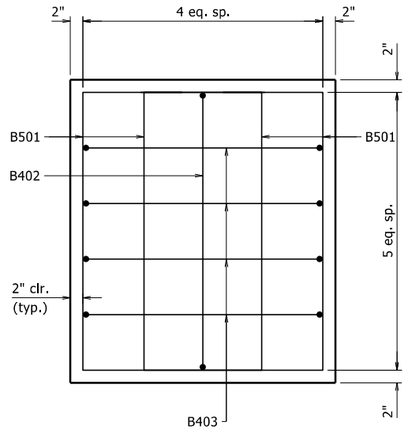

VIEW D-D

NOTE:
Longitudinal cap bars not shown for clarity.

BAR LIST - PER BENT

MARK	NO. REQ'D	LENGTH	P.D.
B401	40	6'-7"	2"
B402	2	4'-9"	2"
B403	8	4'-3"	2"
B404	3	10'-8"	2"
B501	84	12'-8"	2½"
B502	16	9'-7"	2½"
B601	10	36'-8"	Str.
B901	9	39'-2"	9"
B902	8	36'-8"	Str.
C401	26	9'-3"	3"
C801	26	11'-7"	Str.
F501	44	10'-6"	Str.
F601	84	11'-10"	4½"
F801	26	9'-2"	6"

BENDING DIAGRAMS

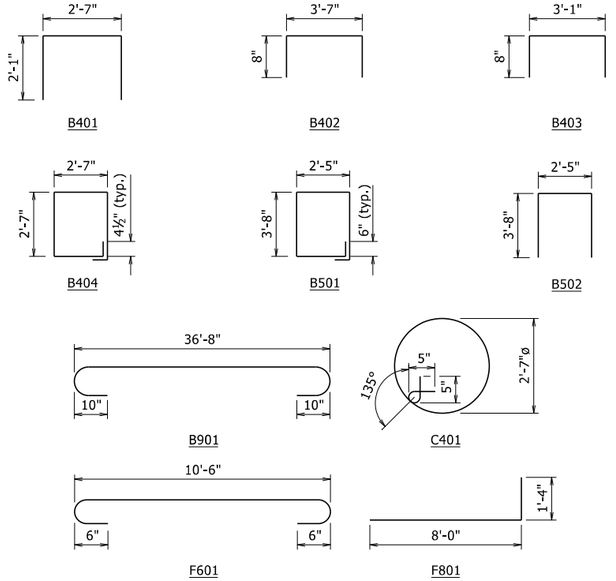

Dimensions are out to out of bars.

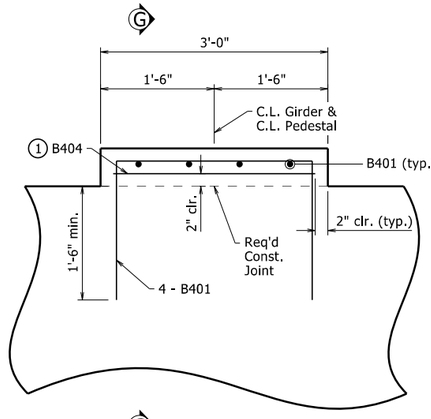

TYPICAL PEDESTAL

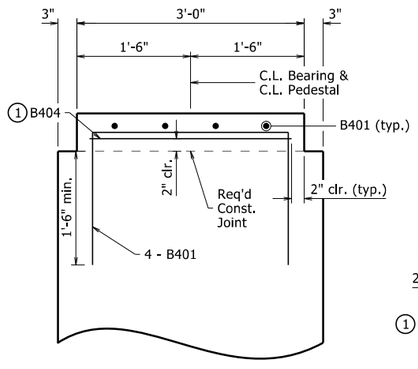

SECTION G-G

① Exclude from exterior pedestals.

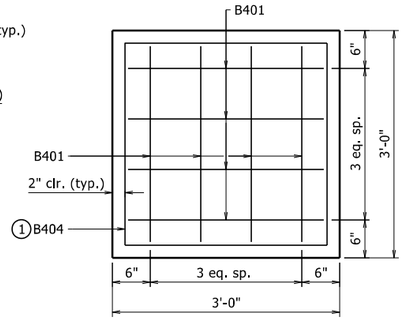

PEDESTAL PLAN

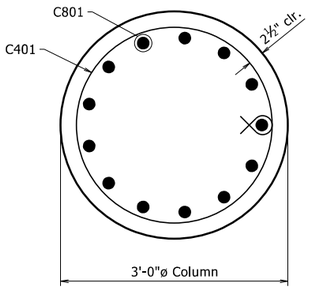

SECTION E-E

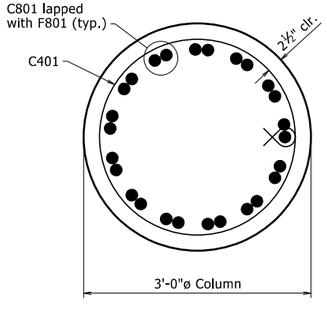

SECTION F-F

STATE OF ARKANSAS
Charles R. Ellis
LICENSED PROFESSIONAL ENGINEER
No. 9235
9/22/23
CHARLES R. ELLIS

BRIDGE ENGINEER

SHEET 2 OF 2
DETAILS OF INTERMEDIATE BENTS
JOHNSON BRANCH

ROUTE SEC.

ARKANSAS STATE HIGHWAY COMMISSION
LITTLE ROCK, ARK.

DRAWN BY: BAB DATE: 7/15/2021 FILENAME: b040792x2_b2.dgn
CHECKED BY: DPT DATE: 8/20/2021 SCALE: 1" = 1'-0"
DESIGNED BY: BAB DATE: 7/2021

BRIDGE NO. 07568 DRAWING NO. 64522

PRINT DATE: 9/22/2023

DATE REVISED	DATE FILMED	DATE REVISED	DATE FILMED	FED. ROAD DIST. NO.	STATE	FED. AID PROJ. NO.	SHEET NO.	TOTAL SHEETS
				6	ARK.			
				JOB NO.		040792	87	122
				(1)		07568- SPAN DETAILS - 64523		

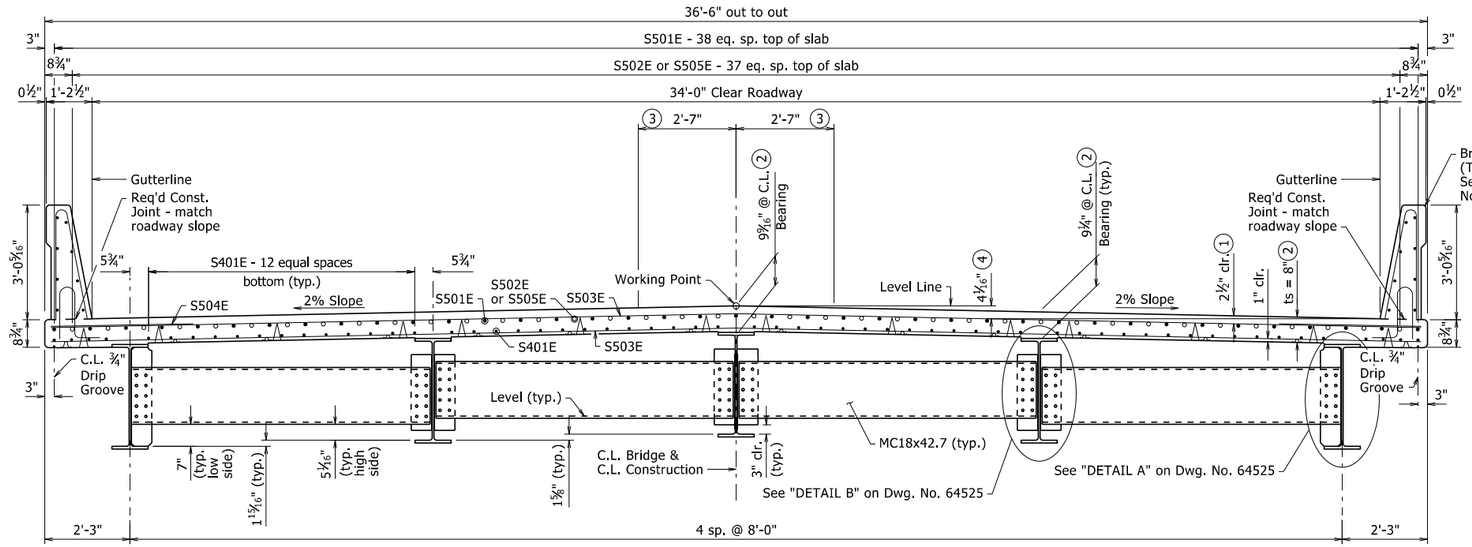

TYPICAL ROADWAY SECTION

LOOKING AHEAD

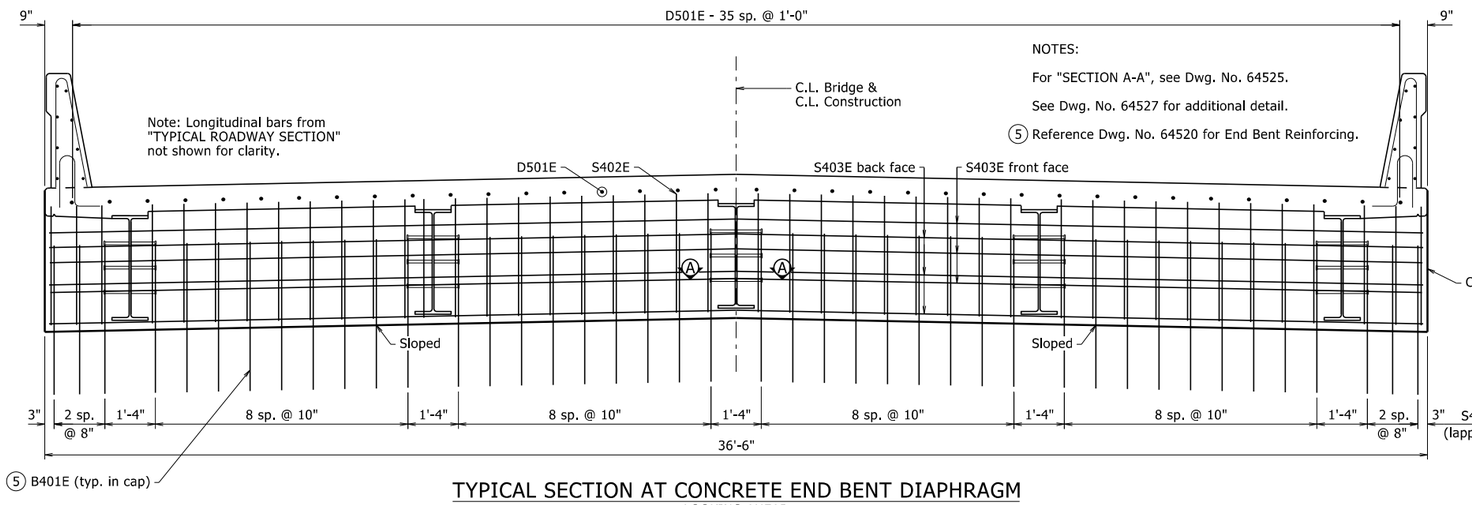

TYPICAL SECTION AT CONCRETE END BENT DIAPHRAGM

LOOKING AHEAD
Looking Back Bent 1
Looking Ahead Bent 4

Slab Reinforcing

Longitudinal: S501E in top (place as shown), S401E in bottom (place as shown). S502E and S505E placed as shown over supports, see "REINFORCING PLAN & DECK POURING SEQUENCE", Dwg. No. 64526.

Transverse: S503E @ 6" o.c. top and bottom
S504E @ 6" o.c. in top of overhangs (bundled with S503E)

Bar positions and clearances from the forms shall be maintained by means of stays, ties, hangers, or other approved devices sufficient in size and number to prevent displacement during construction, per Subsection 804.06. Placement of slab bolsters or hi-chairs with full-length lower runners directly on removable deck forms will not be allowed.

Class 2 Protective Surface Treatment shall be applied to the roadway surface, roadway face, & top of the concrete bridge rail.

No portion of the backwall shall be poured before beams are in place. The portion of the backwall above the optional construction joint at the paving bracket shall not be placed until the deck pour has been made. Refer to the "Expansion Device Installation" note, see Std. Dwg. No. 55008. No heavy construction equipment or backfill shall be allowed directly behind the backwall until the deck concrete for the adjacent span has been completed.

NOTES:
(1) Tolerance Minus = ¼"
Plus = to the amount of slab thickness used to meet slab thickness tolerance.
See "ADJUSTMENT FOR SLAB THICKNESS TOLERANCE" on Std. Dwg. No. 55007.

(2) See "ADJUSTMENT FOR SLAB THICKNESS TOLERANCE" on Std. Dwg. No. 55007.

(3) See "ROUNDING DETAIL", Std. Dwg. No. 55007.

(4) Working point to gutterline.

STATE OF ARKANSAS
Charles R. Ellis
LICENSED PROFESSIONAL ENGINEER
No. 9235
9/22/23
CHARLES R. ELLIS
BRIDGE ENGINEER

SHEET 1 OF 7
DETAILS OF 175'-0" INTEGRAL CONTINUOUS W-BEAM UNIT
JOHNSON BRANCH

ROUTE SEC.

ARKANSAS STATE HIGHWAY COMMISSION
LITTLE ROCK, ARK.

DRAWN BY: BAB DATE: 3/22/2021 FILENAME: b040792x2_s1.dgn
CHECKED BY: DPT DATE: 6/11/2021 SCALE: ½" = 1'-0"
DESIGNED BY: BAB DATE: 2/2021

BRIDGE NO. 07568 DRAWING NO. 64523

PRINT DATE: 9/22/2023

DATE REVISED	DATE FILMED	DATE REVISED	DATE FILMED	FED. ROAD DIST. NO.	STATE	FED. AID PROJ. NO.	SHEET NO.	TOTAL SHEETS
				6	ARK.			
				JOB NO.		040792	88	122
				①		07568 - SPAN DETAILS - 64524		

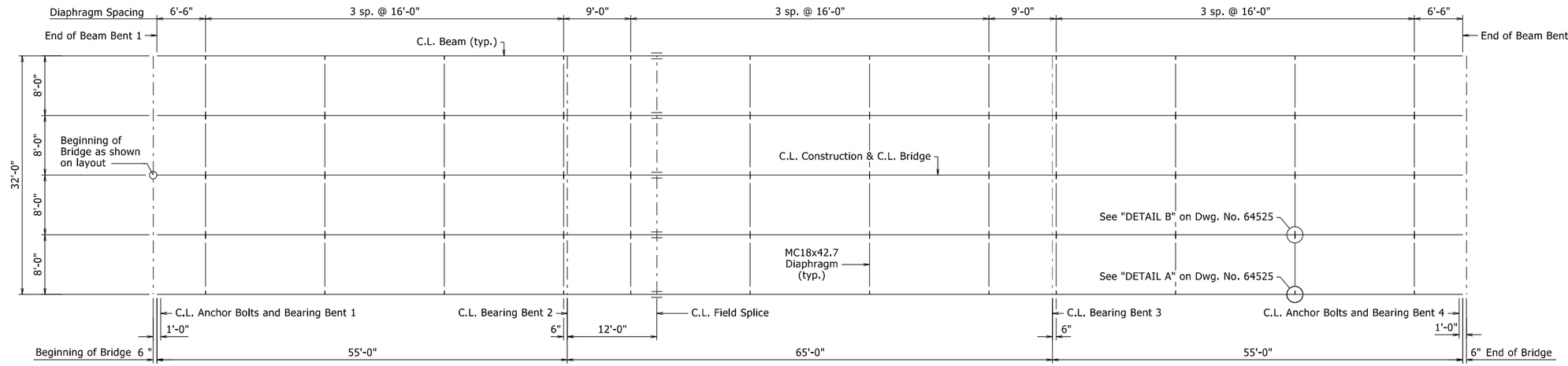

FRAMING PLAN

⅛" = 1'-0"

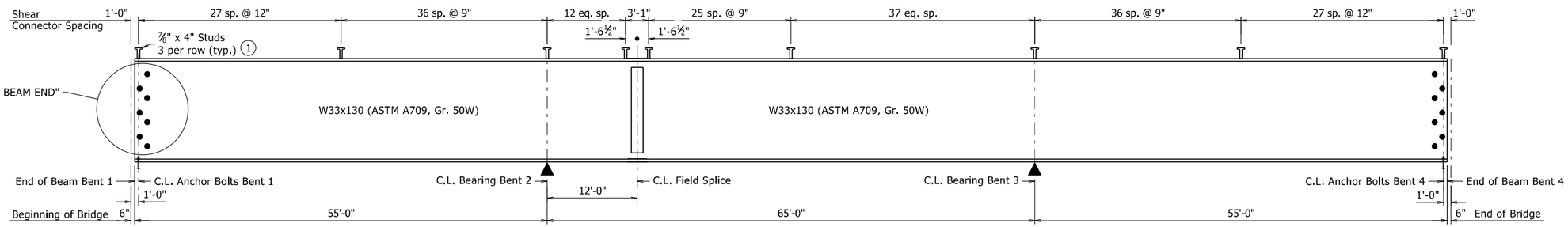

TYPICAL BEAM ELEVATION

⅛" = 1'-0"

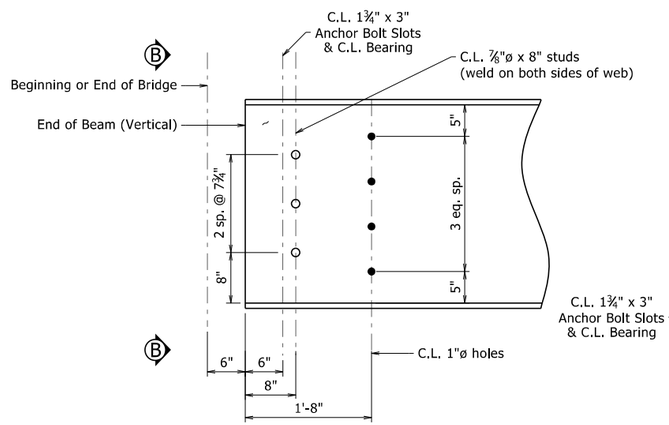

DETAIL OF BEAM END

1" = 1'-0"

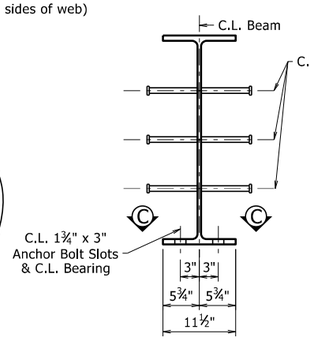

VIEW B-B

1" = 1'-0"

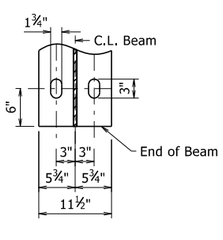

VIEW C-C

1" = 1'-0"

NOTES:

All structural steel shall be ASTM A709, Gr. 50W unless otherwise noted and shall be paid for as "Structural Steel in Beam Spans (A709, Gr. 50W)".

Bolted field splices may be eliminated or shop welded splices may be substituted with the approval of the Engineer. Payment will be made on the basis of plan quantities.

For additional information, see Layout.

For General Notes, see Std. Dwg. No. 55006.

① See Std. Dwg. No. 55007 for additional details.

STATE OF ARKANSAS
LICENSED PROFESSIONAL ENGINEER
No. 9235
9/22/23
CHARLES R. ELLIS

BRIDGE ENGINEER

SHEET 2 OF 7
DETAILS OF 175'-0" INTEGRAL CONTINUOUS W-BEAM UNIT
JOHNSON BRANCH

ROUTE SEC.

ARKANSAS STATE HIGHWAY COMMISSION
LITTLE ROCK, ARK.

DRAWN BY: BAB DATE: 3/22/2021 FILENAME: b040792x2_s1.dgn
CHECKED BY: DPT DATE: 6/11/2021 SCALE: As Shown
DESIGNED BY: BAB DATE: 2/2021

BRIDGE NO. 07568 DRAWING NO. 64524

PRINT DATE: 9/22/2023

DATE REVISED	DATE FILMED	DATE REVISED	DATE FILMED	FED. ROAD DIST. NO.	STATE	FED. AID PROJ. NO.	SHEET NO.	TOTAL SHEETS
				6	ARK.			
				JOB NO.		040792	89	122
				(1)		07568 - SPAN DETAILS - 64525		

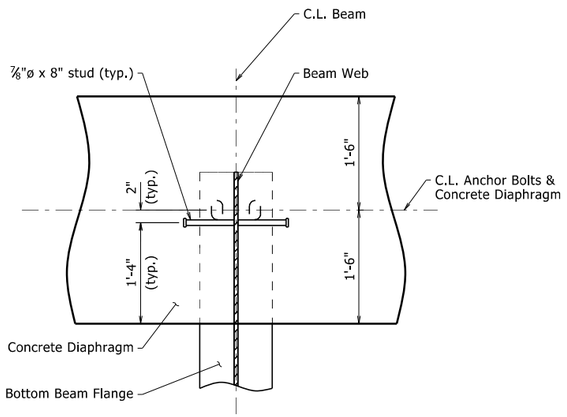

SECTION A-A
1" = 1'-0"

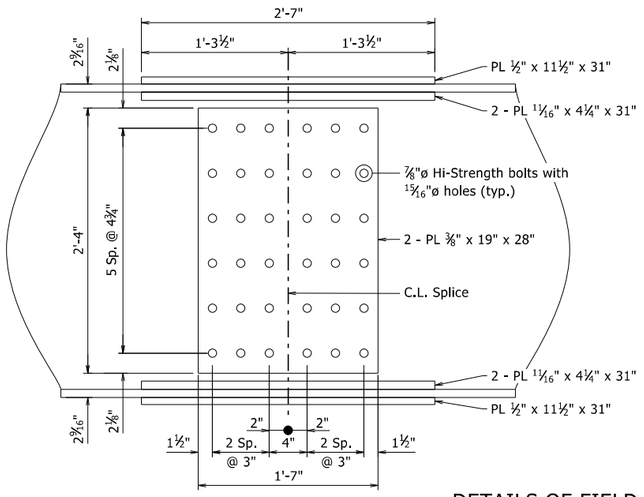

Web Splice

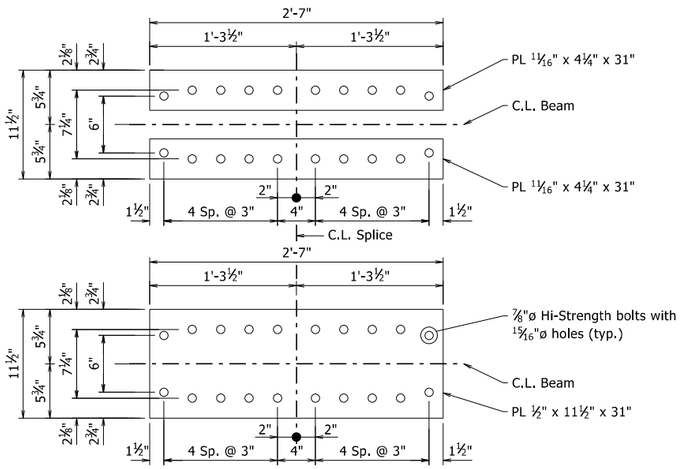

Flange Splice

DETAILS OF FIELD SPLICE
1½" = 1'-0"

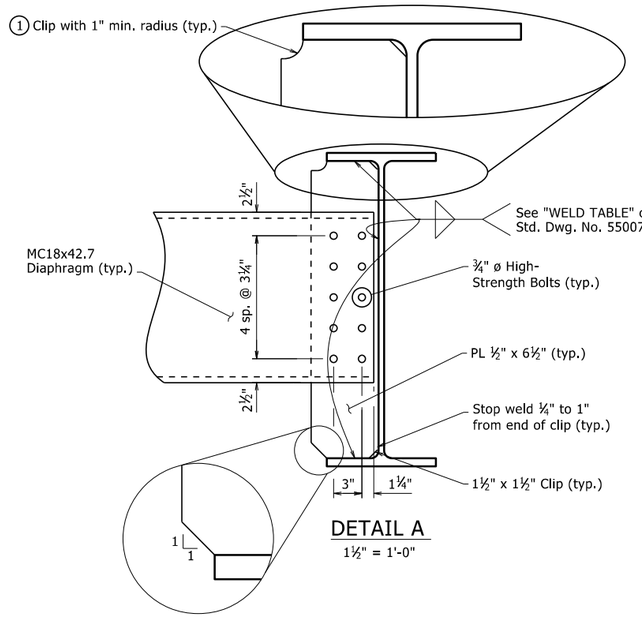

DETAIL A
1½" = 1'-0"

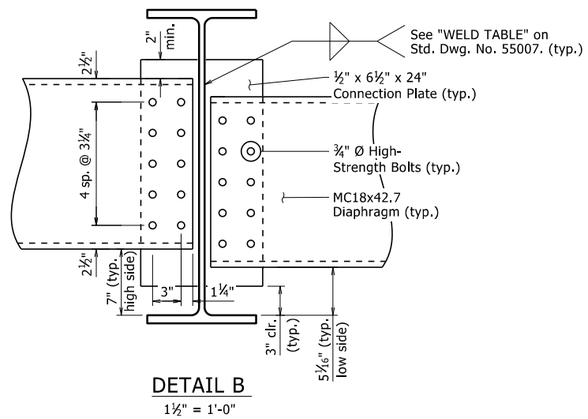

DETAIL B
1½" = 1'-0"

(1) If permanent steel bridge deck forms are used, the Fabricator shall clip the plates as necessary to accommodate the deck form supports.

STATE OF ARKANSAS
Charles R. Ellis
LICENSED PROFESSIONAL ENGINEER
No. 9235
9/22/23
CHARLES R. ELLIS

BRIDGE ENGINEER

SHEET 3 OF 7
DETAILS OF 175'-0" INTEGRAL CONTINUOUS W-BEAM UNIT
JOHNSON BRANCH

ROUTE SEC.

ARKANSAS STATE HIGHWAY COMMISSION
LITTLE ROCK, ARK.

DRAWN BY: BAB DATE: 3/22/2021 FILENAME: b040792x2_s1.dgn
CHECKED BY: DPT DATE: 6/11/2021 SCALE: As Shown
DESIGNED BY: BAB DATE: 2/2021

BRIDGE NO. 07568 DRAWING NO. 64525

PRINT DATE: 9/22/2023

DATE REVISED	DATE FILMED	DATE REVISED	DATE FILMED	FED. ROAD DIST. NO.	STATE	FED. AID PROJ. NO.	SHEET NO.	TOTAL SHEETS
				6	ARK.			
				JOB NO.		040792	90	122

(1) 07568 - SPAN DETAILS - 64526

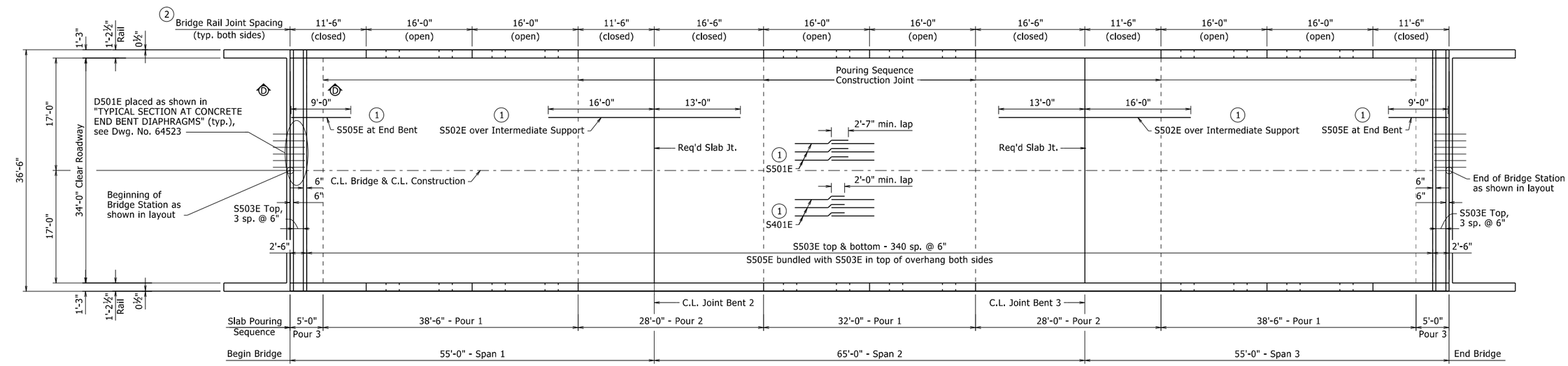

REINFORCING PLAN AND DECK POURING SEQUENCE

⅛" = 1'-0"

For "SECTION D-D", see Dwg. No. 64527.

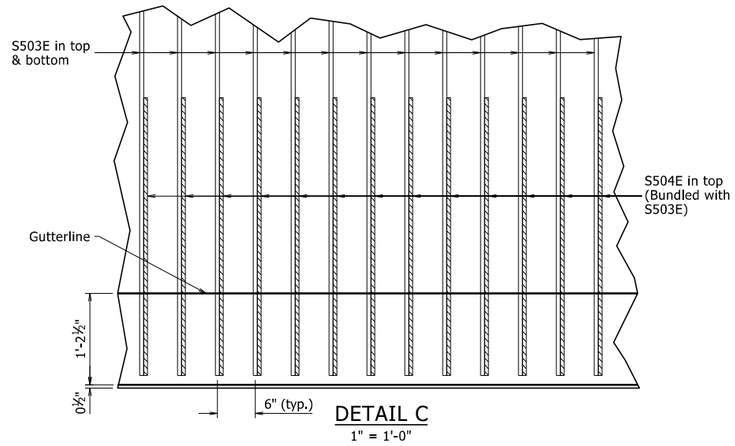

DETAIL C

1" = 1'-0"

Slab Pouring Sequence Notes:
Pours with the same number may be placed simultaneously or separately. All Pours (1) must be placed before Pours (2) can be placed. Pours (2) must be placed before Pours (3) can be placed. 48 hours shall elapse between the end of a pour and the start of the next pour. 72 hours shall elapse between adjacent pours. The Contractor must obtain approval from the Engineer for any deviations from the pouring sequence shown.

Concrete in bridge superstructure shall be placed, consolidated, and screeded off for the entire pour before any concrete has taken its inital set. This may require the use of a retarding agent.

A minimum of 72 hours shall elapse between completion of the slab and the pouring of the bridge railing. Any railing pours made before the entire slab unit has been placed must be approved by the Engineer.

Required slab joints and pouring sequence construction joints shall align with bridge rail joints.

(1) Placed as shown in "TYPICAL ROADWAY SECTION", Dwg. No. 64523.

(2) See Std. Dwg. No. 55070 for additional details.

STATE OF ARKANSAS
Charles R. Ellis
LICENSED PROFESSIONAL ENGINEER
No. 9235
9/22/23
CHARLES R. ELLIS
BRIDGE ENGINEER

SHEET 4 OF 7
DETAILS OF 175'-0" INTEGRAL CONTINUOUS W-BEAM UNIT
JOHNSON BRANCH

ROUTE SEC.

ARKANSAS STATE HIGHWAY COMMISSION
LITTLE ROCK, ARK.

DRAWN BY: BAB DATE: 3/22/2021 FILENAME: b040792x2_s1.dgn
CHECKED BY: DPT DATE: 6/11/2021 SCALE: As Shown
DESIGNED BY: BAB DATE: 2/2021

BRIDGE NO. 07568 DRAWING NO. 64526

PRINT DATE: 9/22/2023

DATE REVISED	DATE FILMED	DATE REVISED	DATE FILMED	FED. ROAD DIST. NO.	STATE	FED. AID PROJ. NO.	SHEET NO.	TOTAL SHEETS
				6	ARK.			
				JOB NO.		040792	91	122
				①	07568 - SPAN DETAILS - 64527			

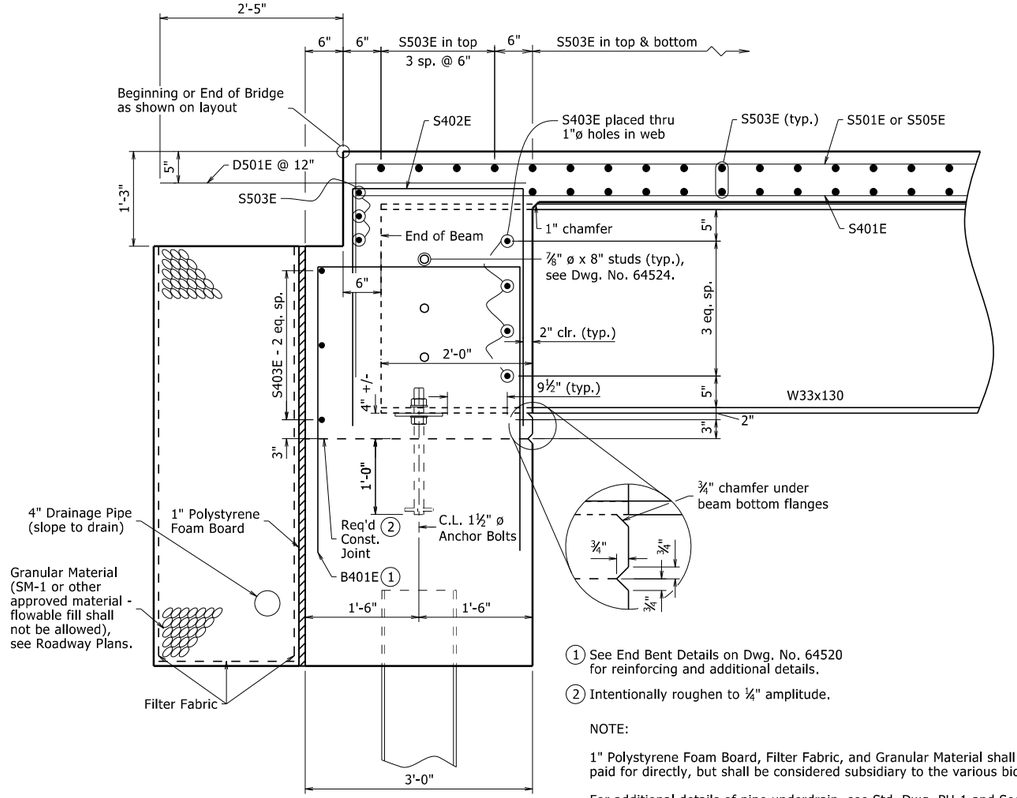

SECTION D-D

1" = 1'-0"

① See End Bent Details on Dwg. No. 64520 for reinforcing and additional details.

② Intentionally roughen to ¼" amplitude.

NOTE:

1" Polystyrene Foam Board, Filter Fabric, and Granular Material shall not be paid for directly, but shall be considered subsidiary to the various bid items.

For additional details of pipe underdrain, see Std. Dwg. PU-1 and Section 611. Pipe underdrains will not be measured or paid for separately, but will be considered subsidiary to the unit price bid for "Unclassified Excavation".

Limits of the concrete end diaphragm shall match the plan dimension of End Bent Cap.

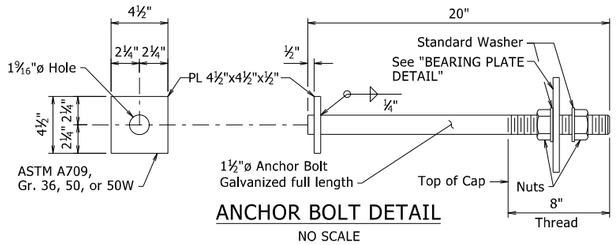

ANCHOR BOLT DETAIL

NO SCALE

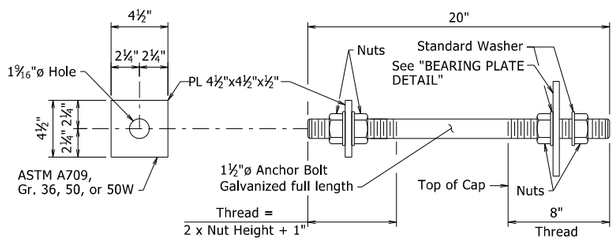

ALTERNATE ANCHOR BOLT DETAIL

NO SCALE

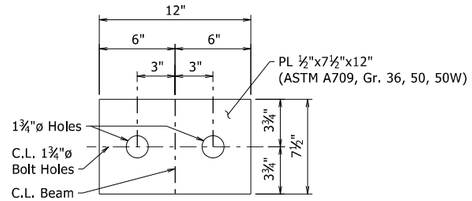

BEARING PLATE DETAIL

NO SCALE

TABLE OF VARIABLES

(for use with Std. Dwg. No. 55070)

Closed Rail Panels			Open Rail Panels					
Panel Length	A	R4XXE	Panel Length	B	C	D	E	R4XXE
11'-6"	22	R404E	16'-0"	8	3'-0"	11	6'-0"	R405E
16'-6"	32	R406E						
Wing	19	R407E						

BAR LIST

	MARK	NO. REQ'D	LENGTH	P.D.
	D501E	72	4'-10"	Str.
③	R400E	96	5'-3"	2½"
③	R401E	756	6'-4"	2½"
③	R402E	120	5'-6"	Str.
③	R403E	676	3'-6"	3¾"
③	R404E	64	11'-2"	Str.
③	R405E	96	15'-8"	Str.
③	R406E	32	16'-2"	Str.
③	R407E	32	9'-8"	Str.
	S401E	300	36'-7"	Str.
	S402E	80	8'-5"	2"
	S403E	14	36'-2"	Str.
	S501E	156	45'-8"	Str.
	S502E	76	29'-0"	Str.
	S503E	696	36'-2"	Str.
	S504E	682	3'-9"	Str.
	S505E	76	11'-9"	3"
	W401E	80	3'-11"	3¾"
	W402E	60	7'-9"	2"
	W601E	20	7'-1"	4½"
	W701E	56	9'-8"	Str.

BENDING DIAGRAMS

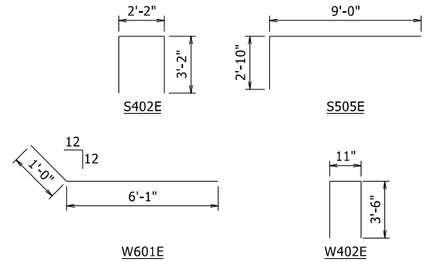

Dimensions are out to out of bars.
Bars with "E" suffix are to be epoxy coated.

③ See Std. Dwg. 55070 for additional information.

STATE OF ARKANSAS
CHARLES R. ELLIS
LICENSED PROFESSIONAL ENGINEER
No. 9235
9/22/23
CHARLES R. ELLIS

BRIDGE ENGINEER

SHEET 5 OF 7
DETAILS OF 175'-0" INTEGRAL
CONTINUOUS W-BEAM UNIT
JOHNSON BRANCH

ROUTE SEC.

ARKANSAS STATE HIGHWAY COMMISSION
LITTLE ROCK, ARK.

DRAWN BY: BAB DATE: 3/22/2021 FILENAME: b040792x2_s1.dgn
CHECKED BY: DPT DATE: 6/11/2021 SCALE: As Shown
DESIGNED BY: BAB DATE: 2/2021

BRIDGE NO. 07568 DRAWING NO. 64527

PRINT DATE: 9/22/2023

DATE REVISED	DATE FILMED	DATE REVISED	DATE FILMED	FED. ROAD DIST. NO.	STATE	FED. AID PROJ. NO.	SHEET NO.	TOTAL SHEETS
				6	ARK.			
				JOB NO.		040792	92	122

① 07568 - SPAN DETAILS - 64528

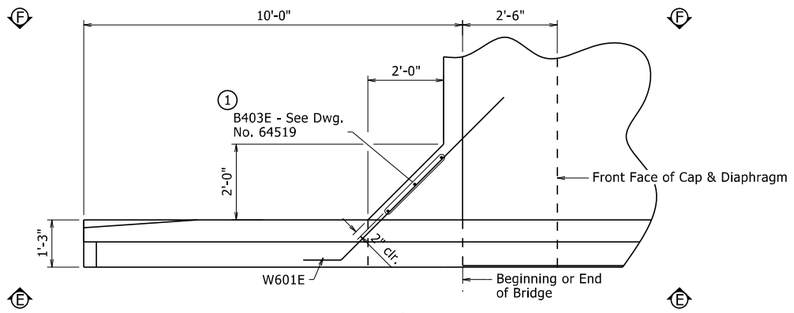

PLAN OF RAIL

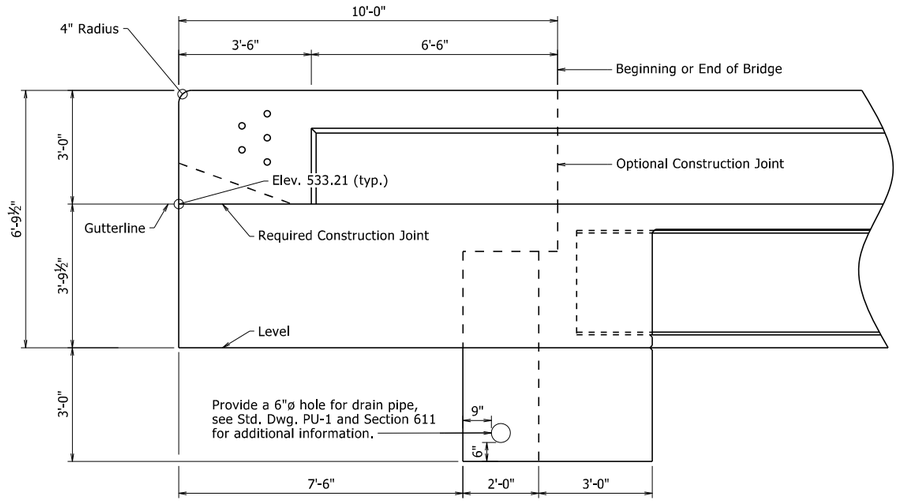

VIEW E-E

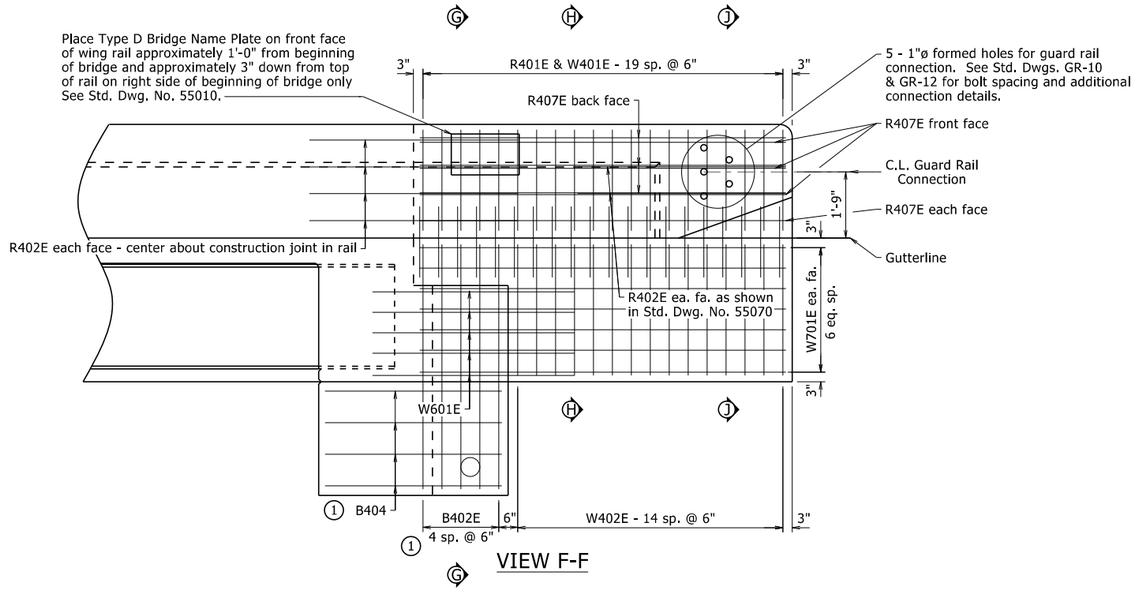

VIEW F-F

For "SECTION G-G", "SECTION H-H" and "SECTION J-J", see Dwg. No. 64529.

For additional information, see "RAIL TERMINUS DETAILS" on Std. Dwg. No. 55070.

STATE OF ARKANSAS
Charles R. Ellis
LICENSED PROFESSIONAL ENGINEER
No. 9235
9/22/23
CHARLES R. ELLIS
BRIDGE ENGINEER

SHEET 6 OF 7
DETAILS OF 175'-0" INTEGRAL CONTINUOUS W-BEAM UNIT
JOHNSON BRANCH

ROUTE SEC.

ARKANSAS STATE HIGHWAY COMMISSION
LITTLE ROCK, ARK.

DRAWN BY:	BAB	DATE:	3/22/2021	FILENAME:	b040792x2_s1.dgn
CHECKED BY:	DPT	DATE:	6/11/2021	SCALE:	½" = 1'-0"
DESIGNED BY:	BAB	DATE:	2/2021		

BRIDGE NO. 07568 DRAWING NO. 64528

PRINT DATE: 9/22/2023

DATE REVISED	DATE FILMED	DATE REVISED	DATE FILMED	FED. ROAD DIST. NO.	STATE	FED. AID PROJ. NO.	SHEET NO.	TOTAL SHEETS
				6	ARK.			
				JOB NO.		040792	93	122
				①		07568 - SPAN DETAILS - 64529		

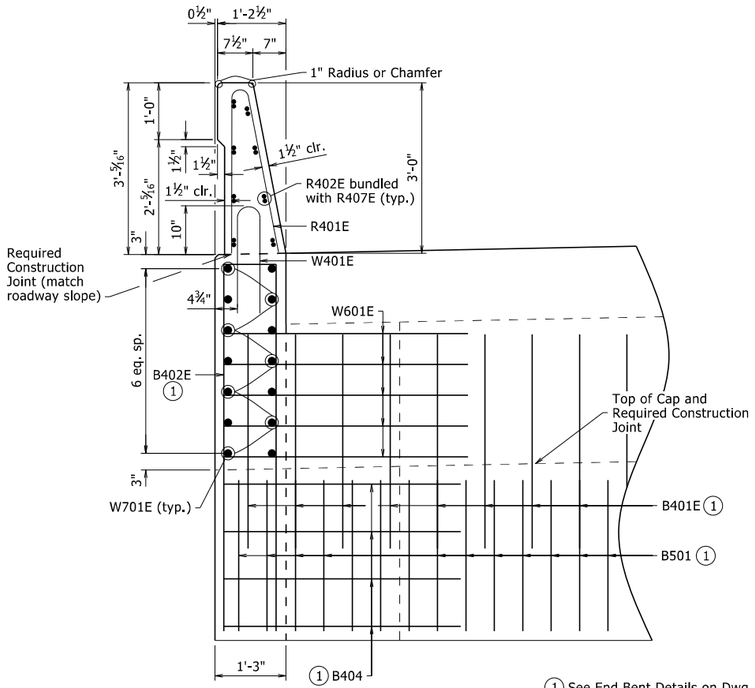

SECTION G-G
¾" = 1'-0"

① See End Bent Details on Dwg. No. 64520 for reinforcing and additional details.

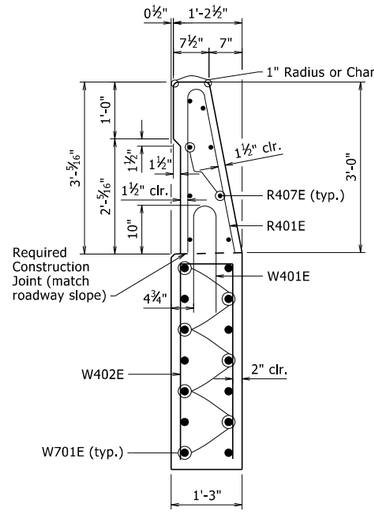

SECTION H-H
¾" = 1'-0"

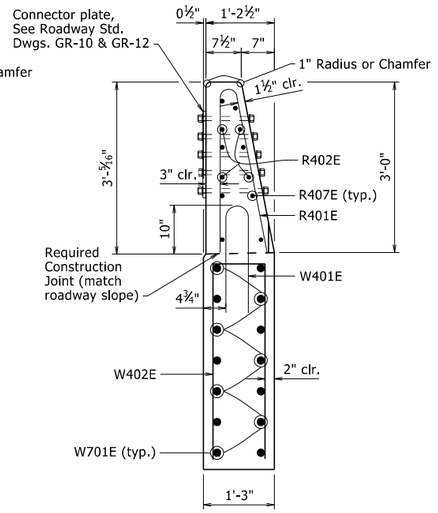

SECTION J-J
¾" = 1'-0"

TABLE OF DEAD LOAD DEFLECTIONS (INCHES)

Span	Point of Deflection	Structural Steel		Structural Steel + Slab		Structural Steel + Slab + Rail	
		Ext. Beam	Int. Beam	Ext. Beam	Int. Beam	Ext. Beam	Int. Beam
Span 1	0.0	0.000	0.000	0.000	0.000	0.000	0.000
	0.1	0.024	0.026	0.145	0.182	0.161	0.192
	0.2	0.044	0.048	0.268	0.336	0.297	0.354
	0.3	0.058	0.063	0.353	0.442	0.391	0.466
	0.4	0.064	0.070	0.391	0.489	0.433	0.515
	0.5	0.062	0.067	0.379	0.474	0.420	0.499
	0.6	0.053	0.058	0.324	0.405	0.359	0.427
	0.7	0.039	0.042	0.236	0.295	0.261	0.311
	0.8	0.022	0.024	0.134	0.168	0.148	0.177
	0.9	0.007	0.008	0.045	0.056	0.050	0.059
½ Span 2	0.0	0.000	0.000	0.000	0.000	0.000	0.000
	0.1	0.006	0.007	0.037	0.046	0.037	0.048
	0.2	0.022	0.023	0.131	0.164	0.131	0.173
	0.3	0.038	0.041	0.233	0.292	0.233	0.308
	0.4	0.051	0.055	0.309	0.386	0.309	0.407
	0.5	0.055	0.060	0.336	0.420	0.336	0.442

← Symmetric about Half-Point of Unit

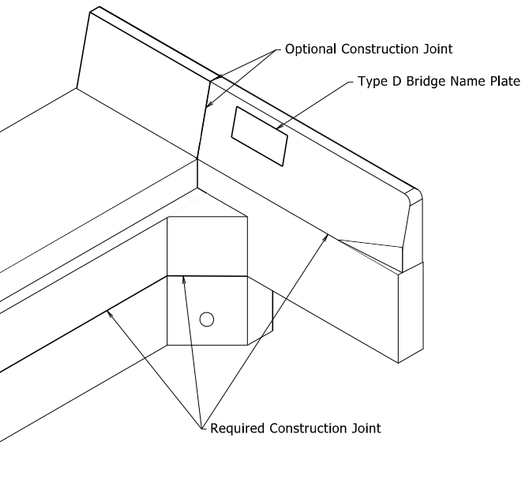

THREE DIMENSIONAL VIEW
NO SCALE

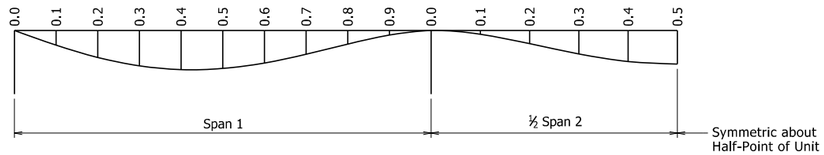

DEAD LOAD DEFLECTION DIAGRAM

Camber for Dead Load Deflection ± ¼" tolerance. Deflections shown are along C.L. beam/girder from a chord from C.L. Bearing to C.L. Bearing. Negative sign (-) indicates point above chord. Vertical curve corrections are not included.

STATE OF ARKANSAS
Charles R. Ellis
LICENSED PROFESSIONAL ENGINEER
No. 9235
9/22/23
CHARLES R. ELLIS

BRIDGE ENGINEER

SHEET 7 OF 7
DETAILS OF 175'-0" INTEGRAL CONTINUOUS W-BEAM UNIT
JOHNSON BRANCH

ROUTE SEC.

ARKANSAS STATE HIGHWAY COMMISSION
LITTLE ROCK, ARK.

DRAWN BY: BAB DATE: 3/22/2021 FILENAME: b040792x2_s1.dgn
CHECKED BY: DPT DATE: 6/11/2021 SCALE: As Shown
DESIGNED BY: BAB DATE: 2/2021

BRIDGE NO. 07568 DRAWING NO. 64529

PRINT DATE: 9/22/2023

DATE REVISED	DATE REVISED	FED.RD. DIST.NO.	STATE	JOB NO.	SHEET NO.	TOTAL SHEETS
		6	ARK.	040792	94	122
		CROSS SECTIONS				

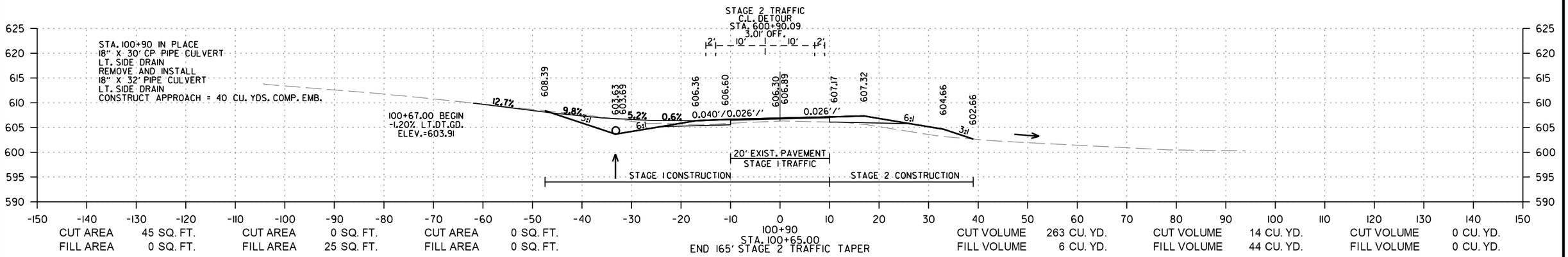

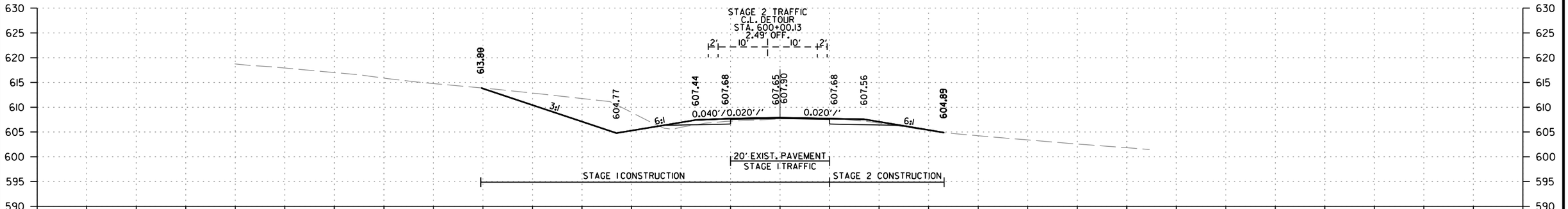

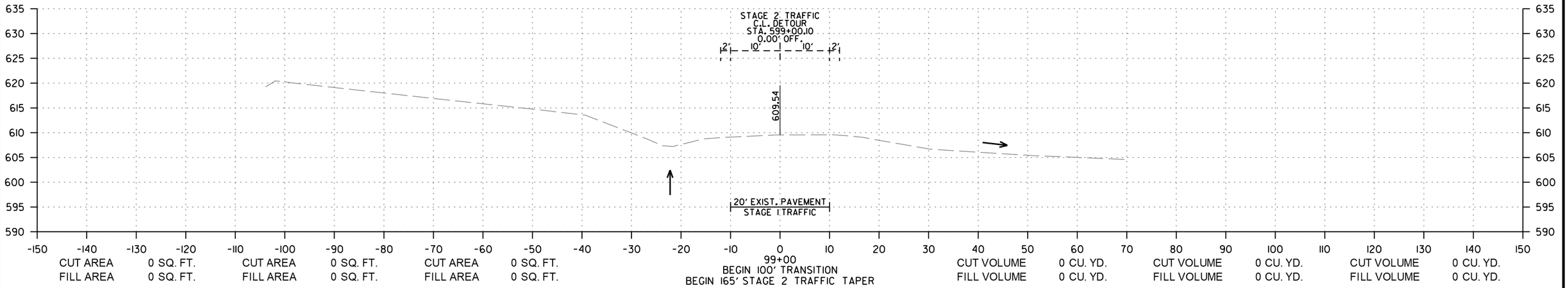

SITE 1
STA. 99+00 TO STA. 100+90

ba42315 8/9/2024
R040792.DGN MicroStation v8.11.9.578

DATE REVISED	DATE REVISED	FED.RD. DIST.NO.	STATE	JOB NO.	SHEET NO.	TOTAL SHEETS
		6	ARK.	040792	95	122
		CROSS SECTIONS				

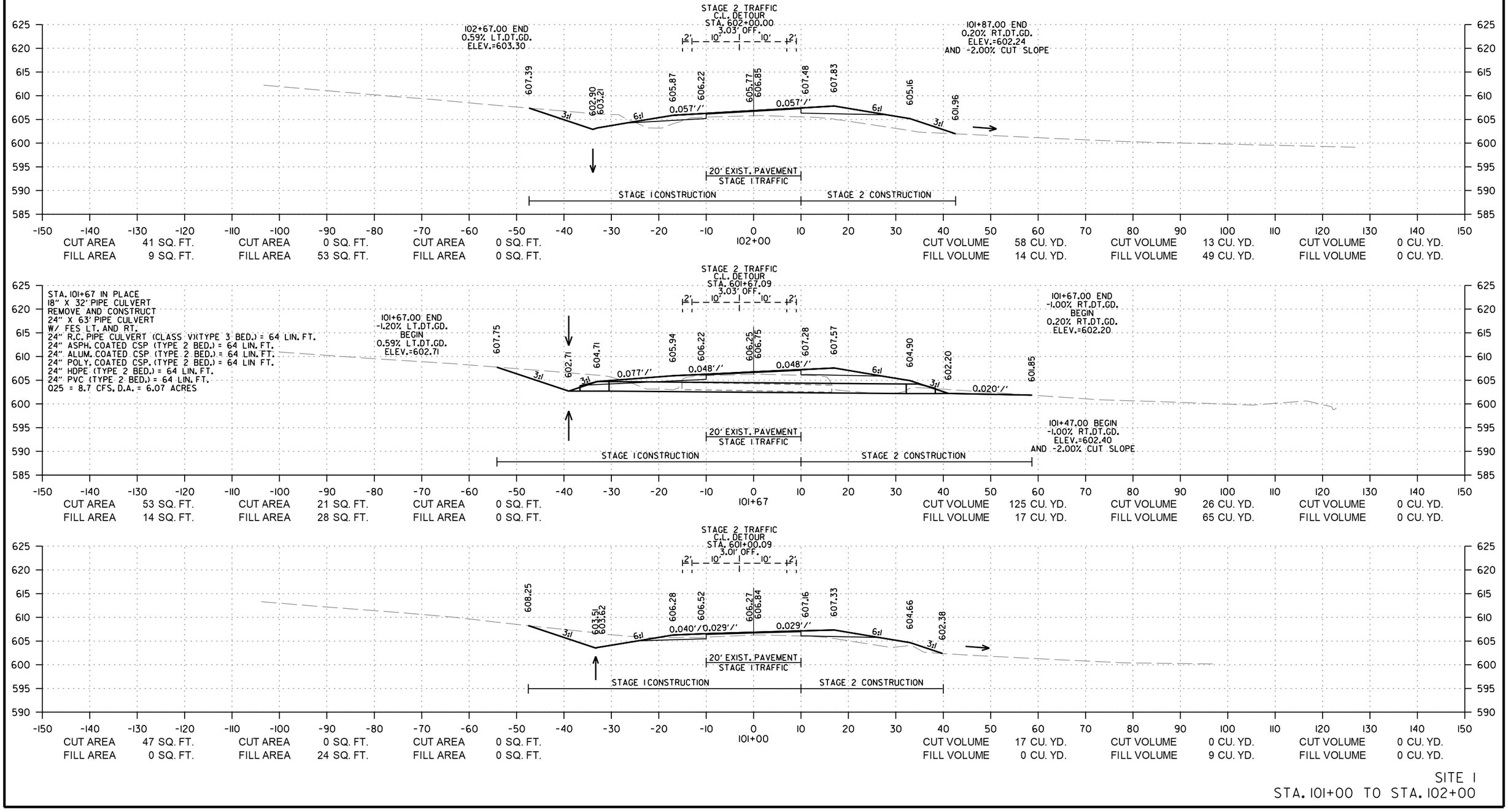

SITE 1
STA. 101+00 TO STA. 102+00

ba42315 8/9/2024
R040792.DGN MicroStation v8.11.9.578

DATE REVISED	DATE REVISED	FED.RD. DIST.NO.	STATE	JOB NO.	SHEET NO.	TOTAL SHEETS
		6	ARK.	040792	96	122
		CROSS SECTIONS				

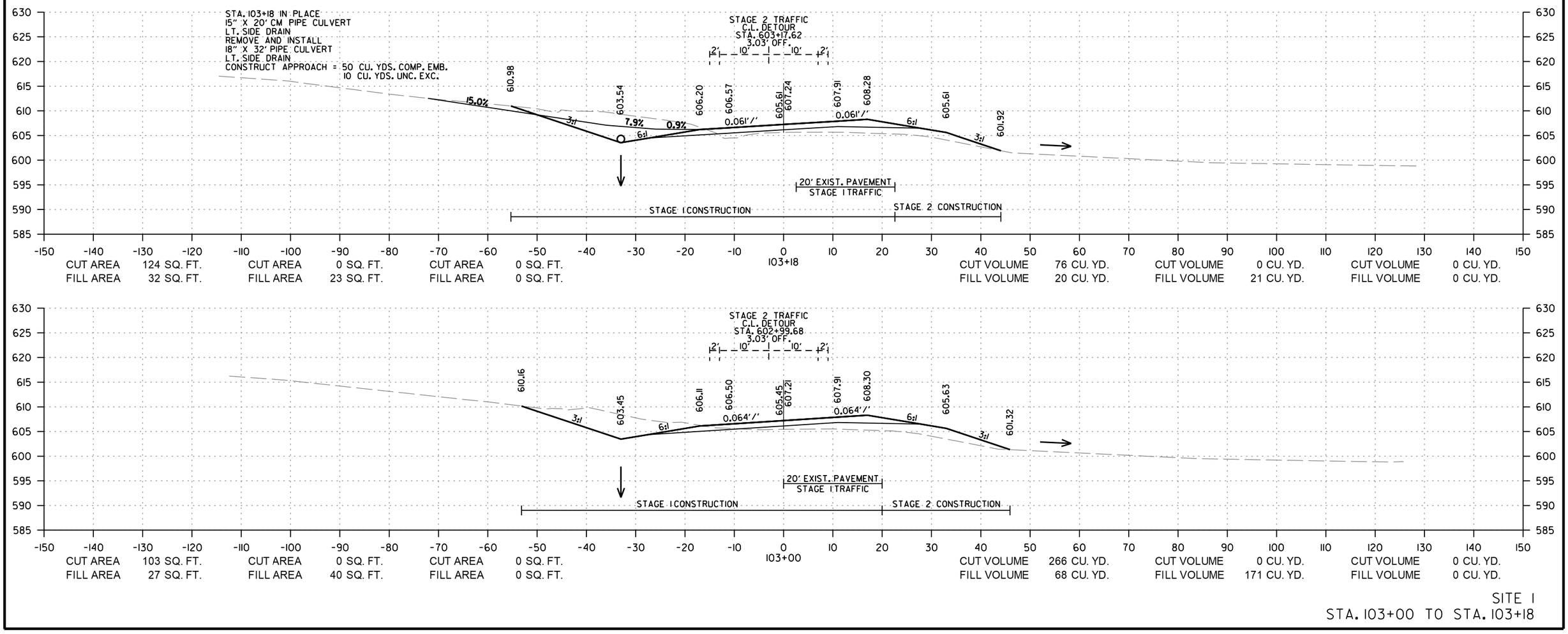

SITE 1
STA. 103+00 TO STA. 103+18

ba42315 8/9/2024
R040792.DGN MicroStation v8.11.9.578

DATE REVISED	DATE REVISED	FED.RD. DIST.NO.	STATE	JOB NO.	SHEET NO.	TOTAL SHEETS
		6	ARK.	040792	97	122
		CROSS SECTIONS				

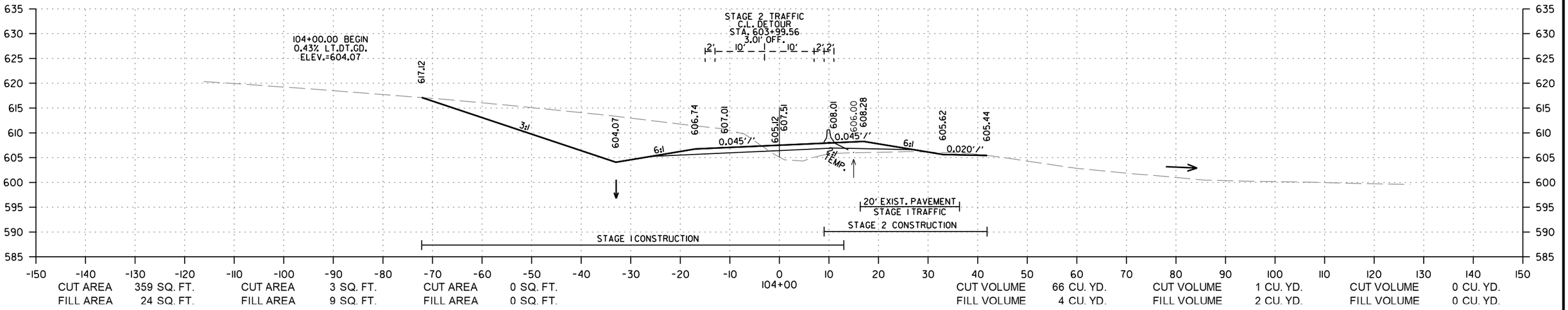

CUT AREA	359 SQ. FT.	CUT AREA	3 SQ. FT.	CUT AREA	0 SQ. FT.
FILL AREA	24 SQ. FT.	FILL AREA	9 SQ. FT.	FILL AREA	0 SQ. FT.
CUT VOLUME	66 CU. YD.	CUT VOLUME	1 CU. YD.	CUT VOLUME	0 CU. YD.
FILL VOLUME	4 CU. YD.	FILL VOLUME	2 CU. YD.	FILL VOLUME	0 CU. YD.

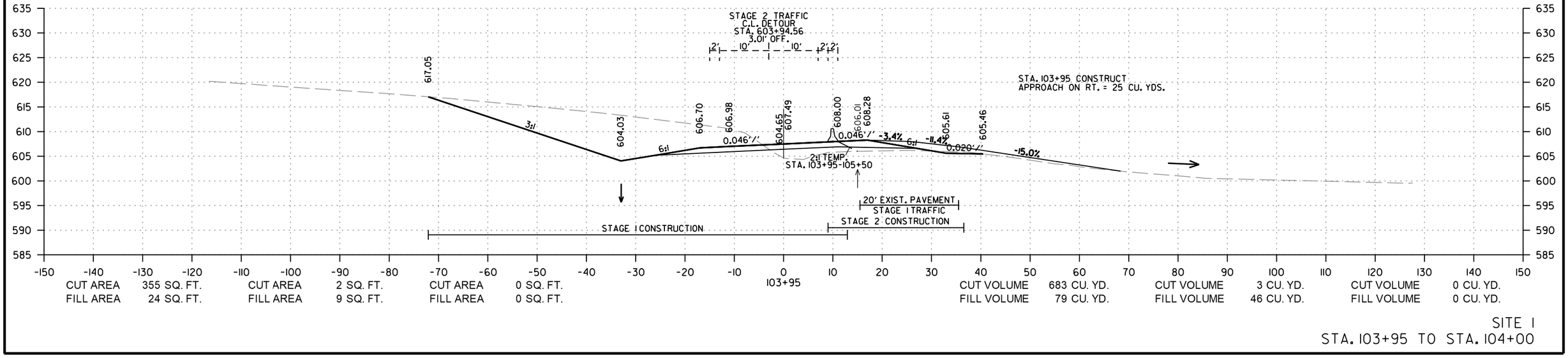

CUT AREA	355 SQ. FT.	CUT AREA	2 SQ. FT.	CUT AREA	0 SQ. FT.
FILL AREA	24 SQ. FT.	FILL AREA	9 SQ. FT.	FILL AREA	0 SQ. FT.
CUT VOLUME	683 CU. YD.	CUT VOLUME	3 CU. YD.	CUT VOLUME	0 CU. YD.
FILL VOLUME	79 CU. YD.	FILL VOLUME	46 CU. YD.	FILL VOLUME	0 CU. YD.

SITE 1
STA. 103+95 TO STA. 104+00

ba42315 8/9/2024
R040792.DGN MicroStation v8.11.9.578

DATE REVISED	DATE REVISED	FED.RD. DIST.NO.	STATE	JOB NO.	SHEET NO.	TOTAL SHEETS
		6	ARK.	040792	98	122
		CROSS SECTIONS				

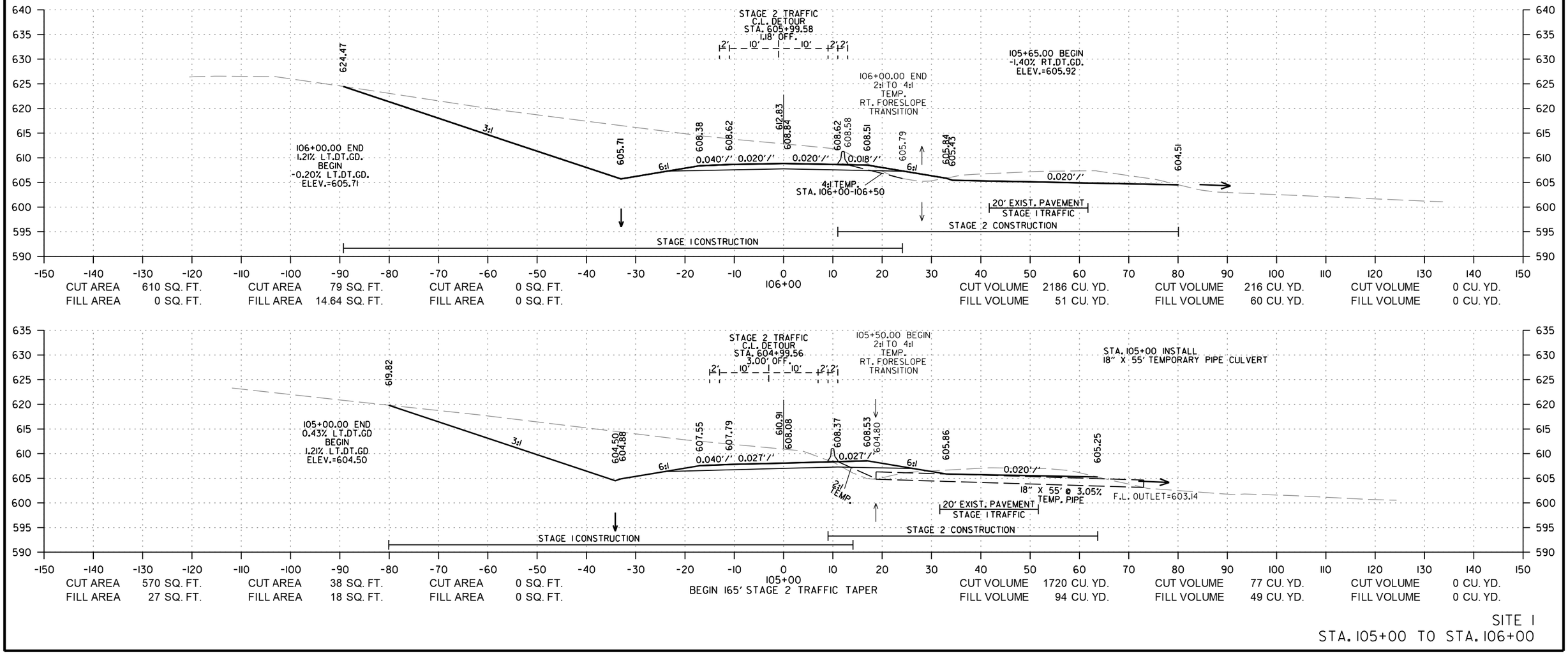

SITE 1
STA. 105+00 TO STA. 106+00

be42315 8/9/2024
R040792.DGN MicroStation v8.11.9.578

DATE REVISED	DATE REVISED	FED.RD. DIST.NO.	STATE	JOB NO.	SHEET NO.	TOTAL SHEETS
		6	ARK.	040792	99	122
		CROSS SECTIONS				

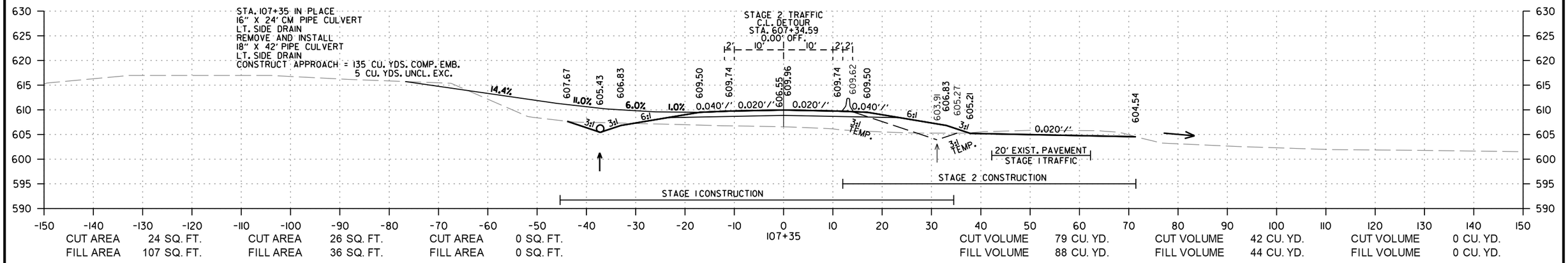

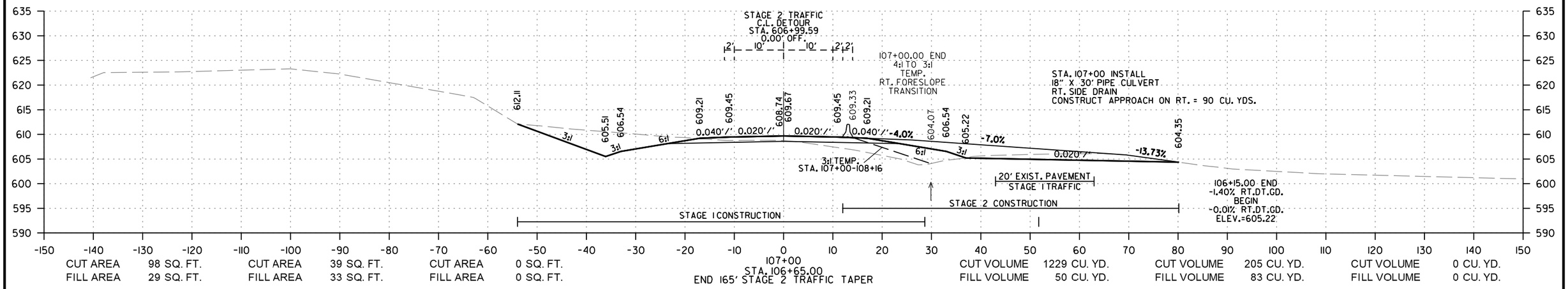

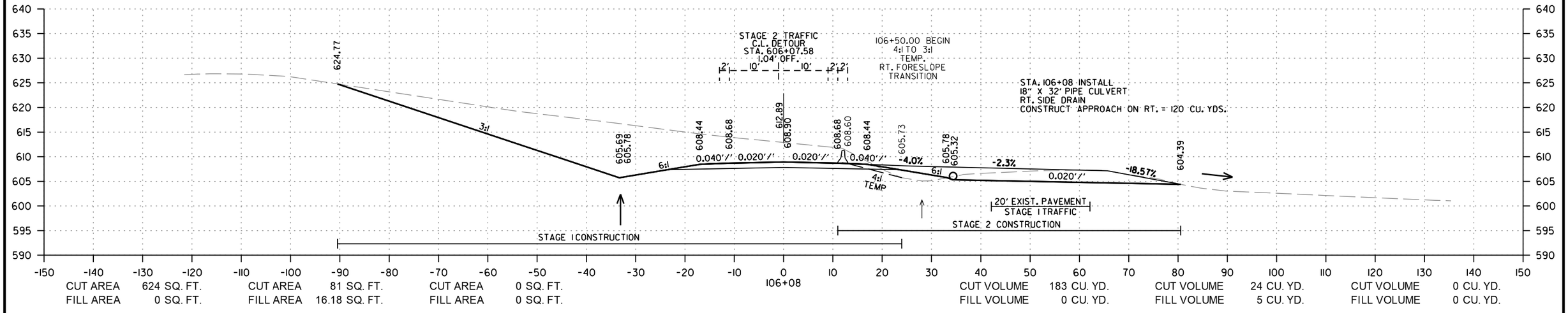

SITE 1
STA. 106+08 TO STA. 107+35

ba42315 8/9/2024
R040792.DGN MicroStation v8.11.9.578

DATE REVISED	DATE REVISED	FED.RD. DIST.NO.	STATE	JOB NO.	SHEET NO.	TOTAL SHEETS
		6	ARK.	040792	100	122
		CROSS SECTIONS				

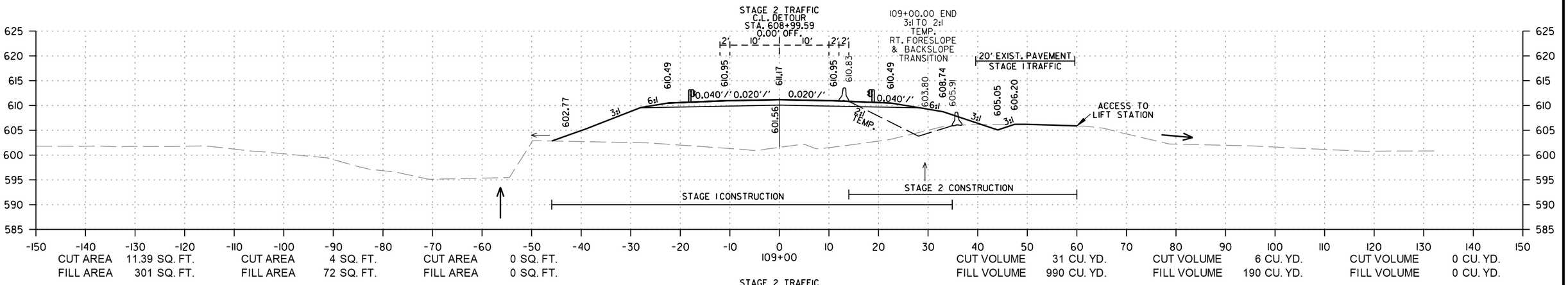

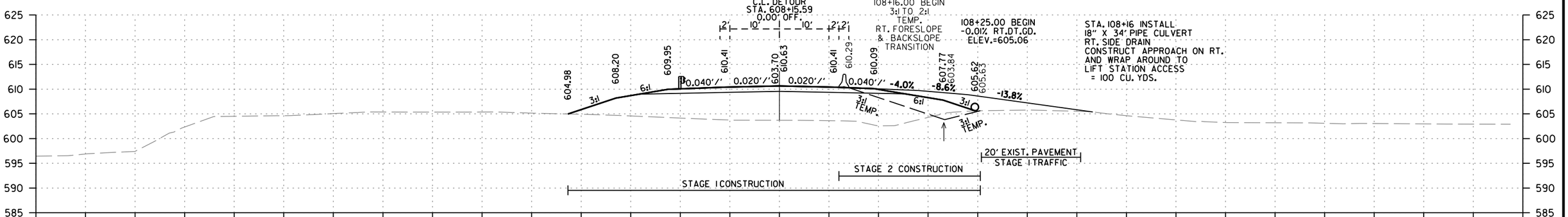

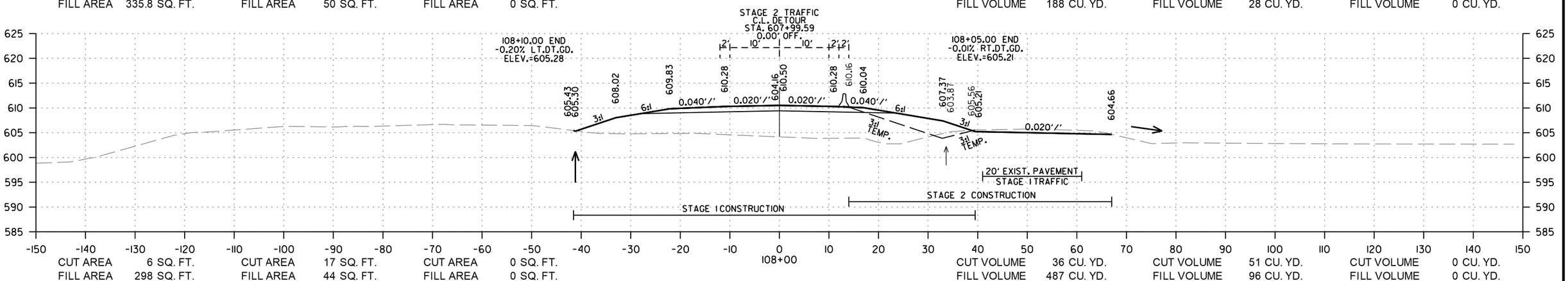

SITE 1
STA. 108+00 TO STA. 109+00

be42315 8/9/2024
R040792.DGN MicroStation v8.11.9.578

DATE REVISED	DATE REVISED	FED.RD. DIST.NO.	STATE	JOB NO.	SHEET NO.	TOTAL SHEETS
		6	ARK.	040792	101	122
		CROSS SECTIONS				

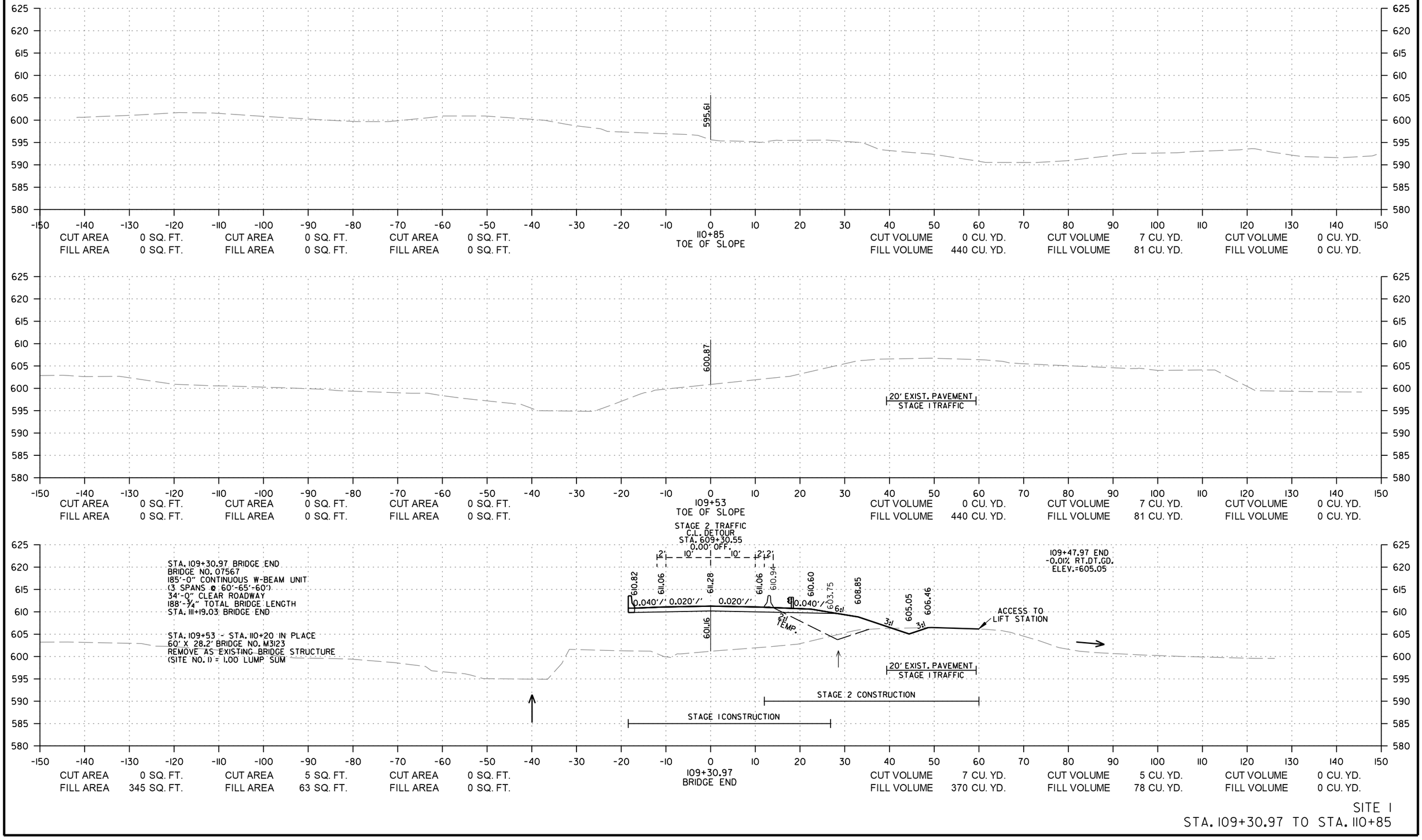

SITE 1
STA. 109+30.97 TO STA. 110+85

ba42315 8/9/2024
R040792.DGN MicroStation v8.11.9.578

DATE REVISED	DATE REVISED	FED.RD. DIST.NO.	STATE	JOB NO.	SHEET NO.	TOTAL SHEETS
		6	ARK.	040792	102	122
		CROSS SECTIONS				

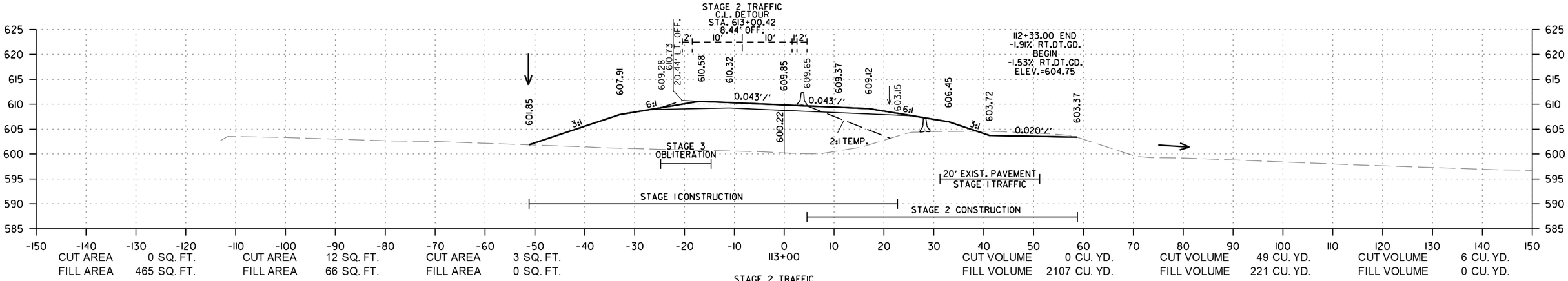

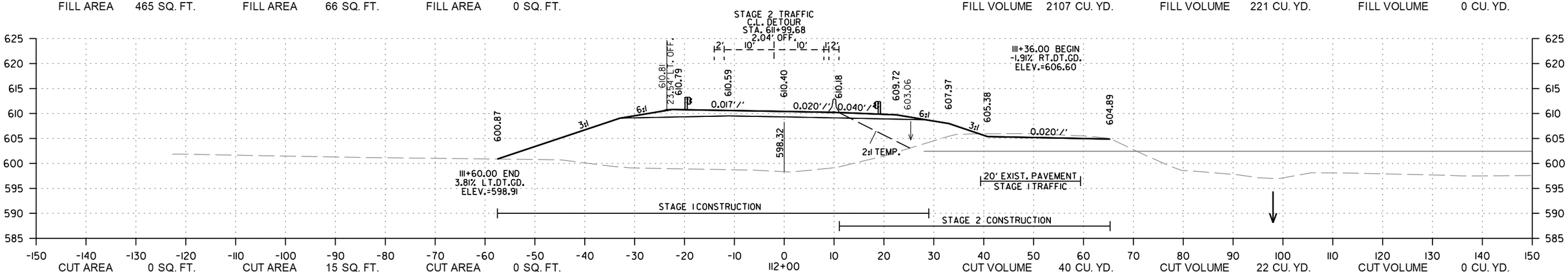

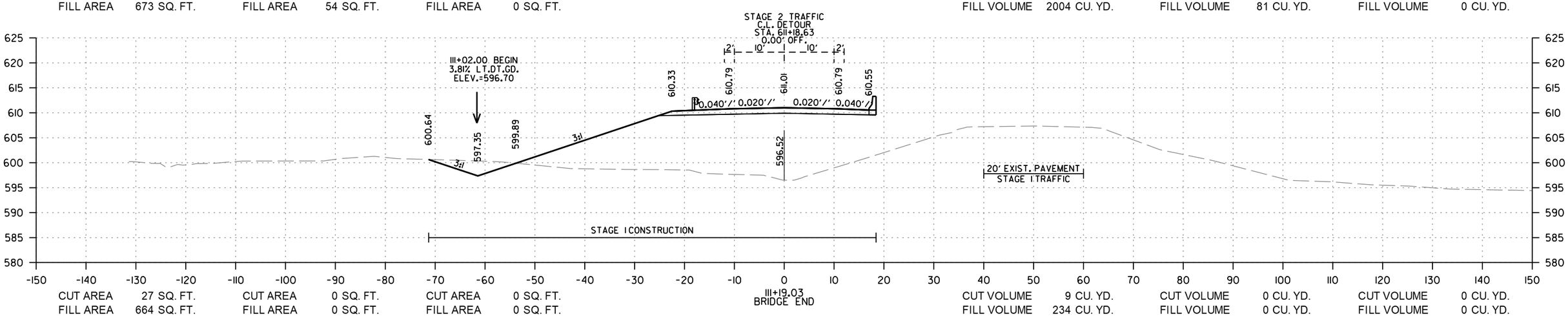

SITE 1
STA. 111+19.03 TO STA. 113+00

ba42315 8/9/2024
R040792.DGN MicroStation v8.11.9.578

DATE REVISED	DATE REVISED	FED.RD. DIST.NO.	STATE	JOB NO.	SHEET NO.	TOTAL SHEETS
		6	ARK.	040792	103	122
		CROSS SECTIONS				

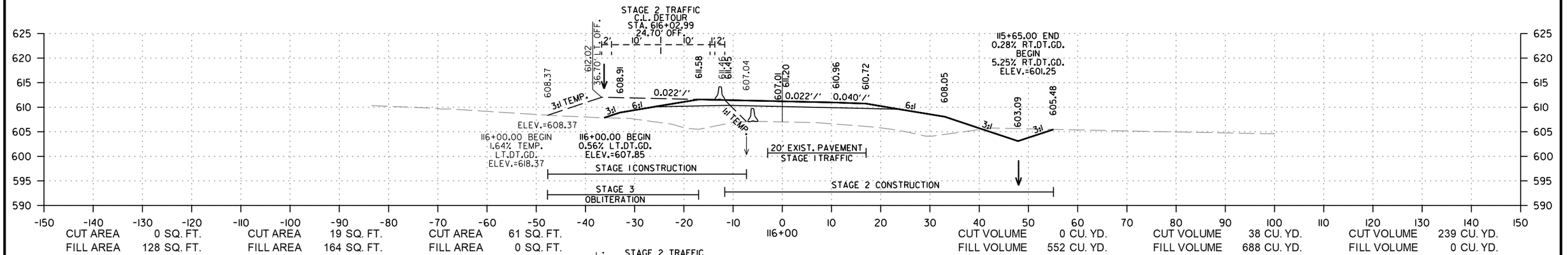

CUT AREA	0 SQ. FT.	CUT AREA	19 SQ. FT.	CUT AREA	61 SQ. FT.	CUT VOLUME	0 CU. YD.	CUT VOLUME	38 CU. YD.	CUT VOLUME	239 CU. YD.
FILL AREA	128 SQ. FT.	FILL AREA	164 SQ. FT.	FILL AREA	0 SQ. FT.	FILL VOLUME	552 CU. YD.	FILL VOLUME	688 CU. YD.	FILL VOLUME	0 CU. YD.

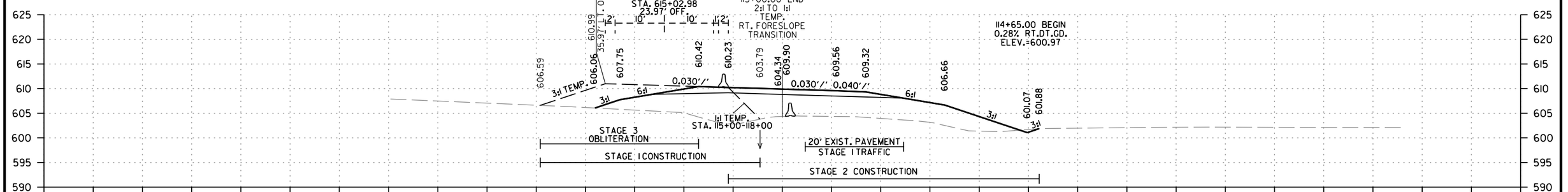

CUT AREA	0 SQ. FT.	CUT AREA	1 SQ. FT.	CUT AREA	68 SQ. FT.	CUT VOLUME	0 CU. YD.	CUT VOLUME	2 CU. YD.	CUT VOLUME	232 CU. YD.
FILL AREA	170 SQ. FT.	FILL AREA	208 SQ. FT.	FILL AREA	0 SQ. FT.	FILL VOLUME	676 CU. YD.	FILL VOLUME	628 CU. YD.	FILL VOLUME	0 CU. YD.

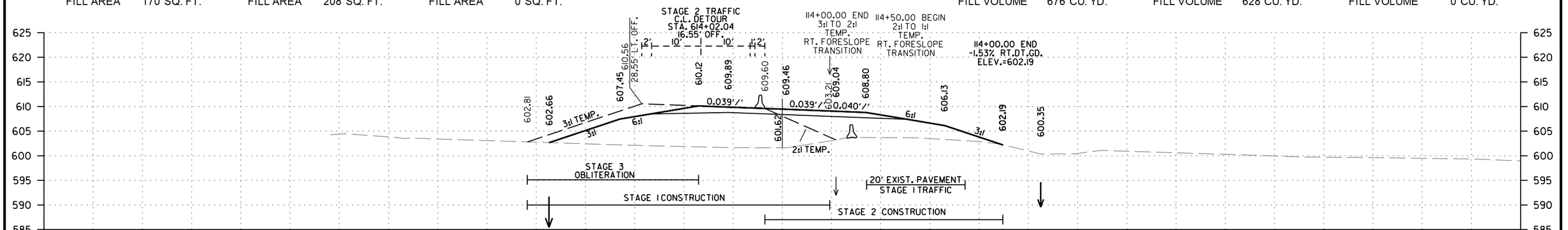

CUT AREA	0 SQ. FT.	CUT AREA	0 SQ. FT.	CUT AREA	57 SQ. FT.	CUT VOLUME	0 CU. YD.	CUT VOLUME	22 CU. YD.	CUT VOLUME	110 CU. YD.
FILL AREA	195 SQ. FT.	FILL AREA	132 SQ. FT.	FILL AREA	0 SQ. FT.	FILL VOLUME	1222 CU. YD.	FILL VOLUME	365 CU. YD.	FILL VOLUME	0 CU. YD.

SITE 1
STA. 114+00 TO STA. 116+00

be42315 8/9/2024
R040792.DGN MicroStation v8.11.9.578

DATE REVISED	DATE REVISED	FED.RD. DIST.NO.	STATE	JOB NO.	SHEET NO.	TOTAL SHEETS
		6	ARK.	040792	104	122
		CROSS SECTIONS				

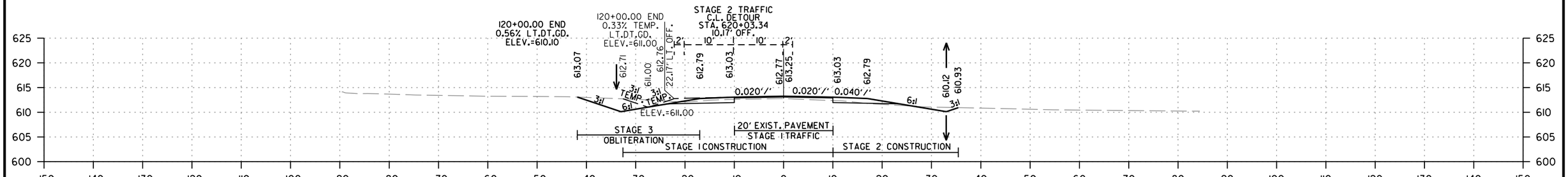

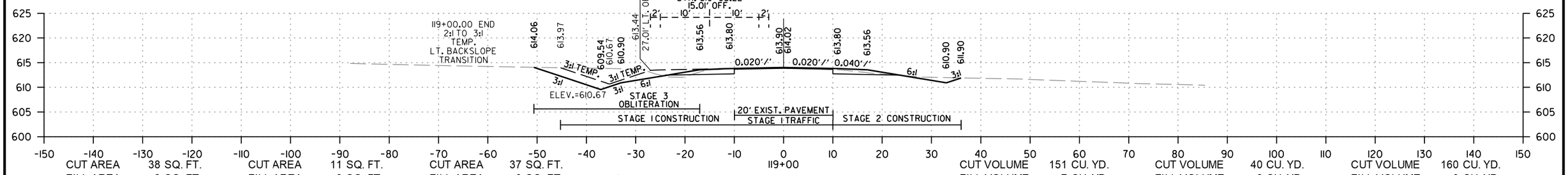

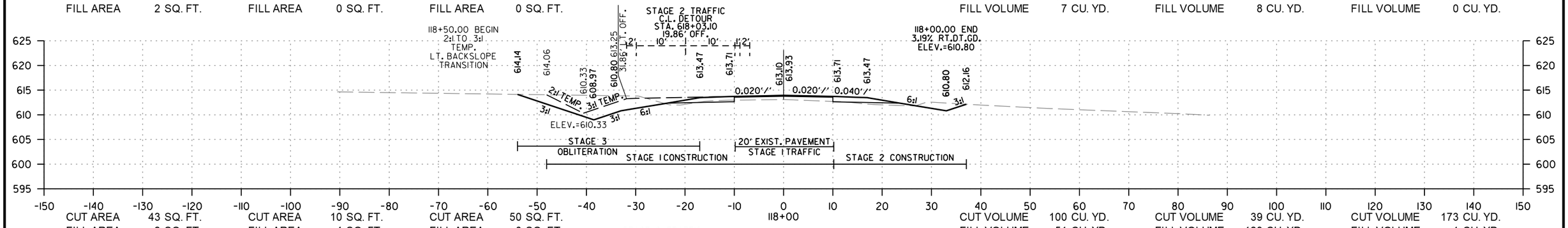

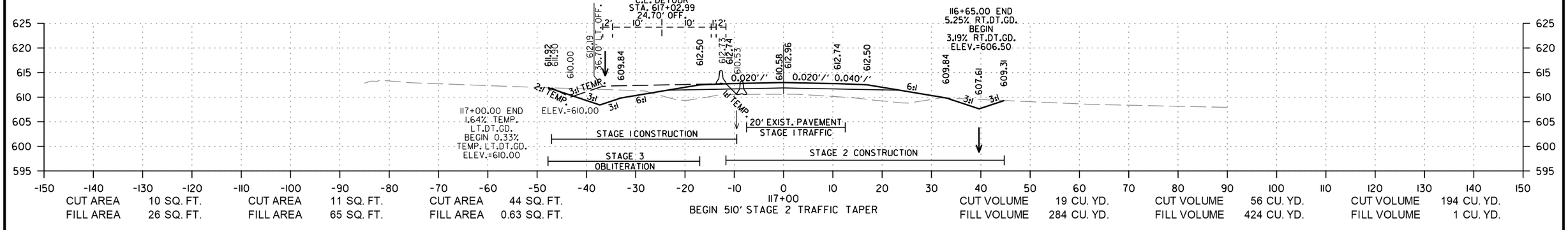

SITE 1
STA. 117+00 TO STA. 120+00

be42315 8/9/2024
R040792.DGN MicroStation v8.11.9.578

DATE REVISED	DATE REVISED	FED.RD. DIST.NO.	STATE	JOB NO.	SHEET NO.	TOTAL SHEETS
		6	ARK.	040792	105	122
		CROSS SECTIONS				

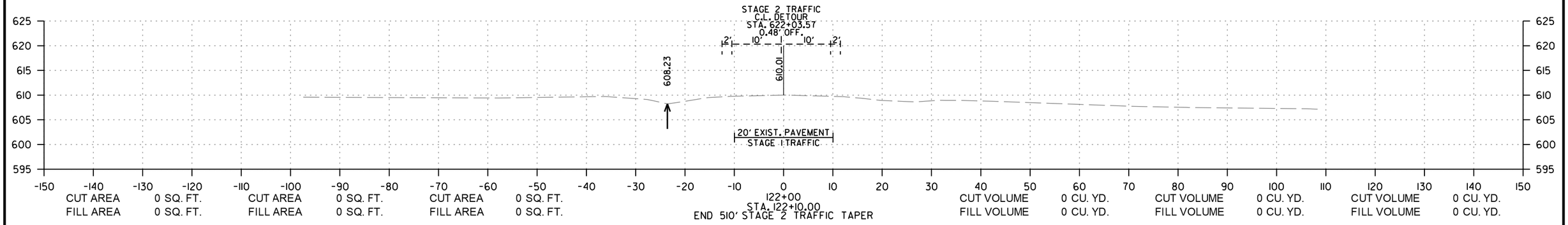

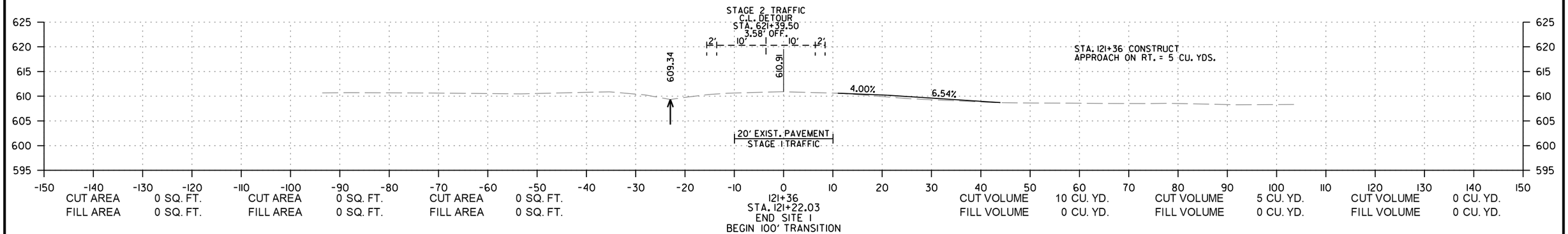

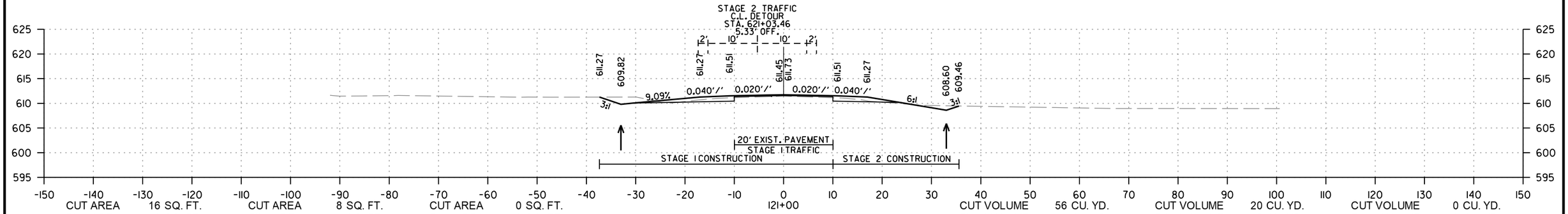

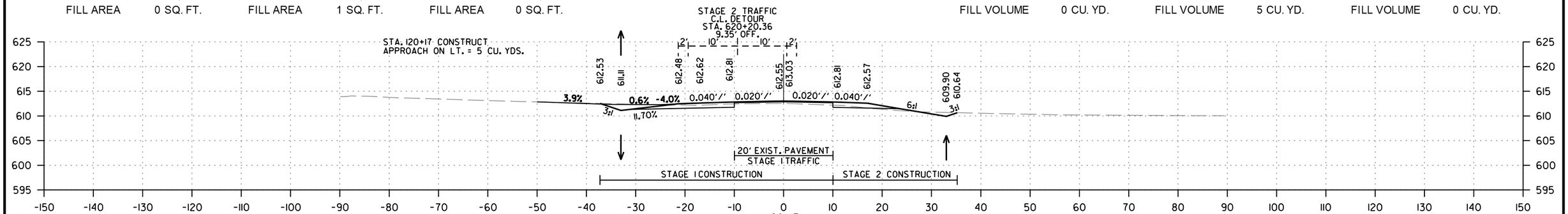

SITE 1
STA. 120+17 TO STA. 122+00

ba42315 8/9/2024
R040792.DGN MicroStation v8.11.9.578

DATE REVISED	DATE REVISED	FED.RD. DIST.NO.	STATE	JOB NO.	SHEET NO.	TOTAL SHEETS
		6	ARK.	040792	106	122
		CROSS SECTIONS				

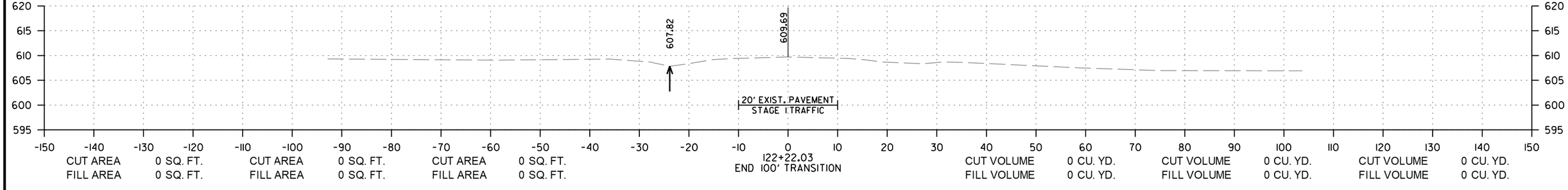

CUT AREA 0 SQ. FT. CUT AREA 0 SQ. FT. CUT AREA 0 SQ. FT.
FILL AREA 0 SQ. FT. FILL AREA 0 SQ. FT. FILL AREA 0 SQ. FT.

CUT VOLUME 0 CU. YD. CUT VOLUME 0 CU. YD. CUT VOLUME 0 CU. YD.
FILL VOLUME 0 CU. YD. FILL VOLUME 0 CU. YD. FILL VOLUME 0 CU. YD.

SITE 1
STA. 122+22.03 TO STA. 122+22.03

ba42315 8/9/2024
R040792.DGN MicroStation v8.11.9.578

DATE REVISED	DATE REVISED	FED.RD. DIST.NO.	STATE	JOB NO.	SHEET NO.	TOTAL SHEETS
		6	ARK.	040792	107	122
		CROSS SECTIONS				

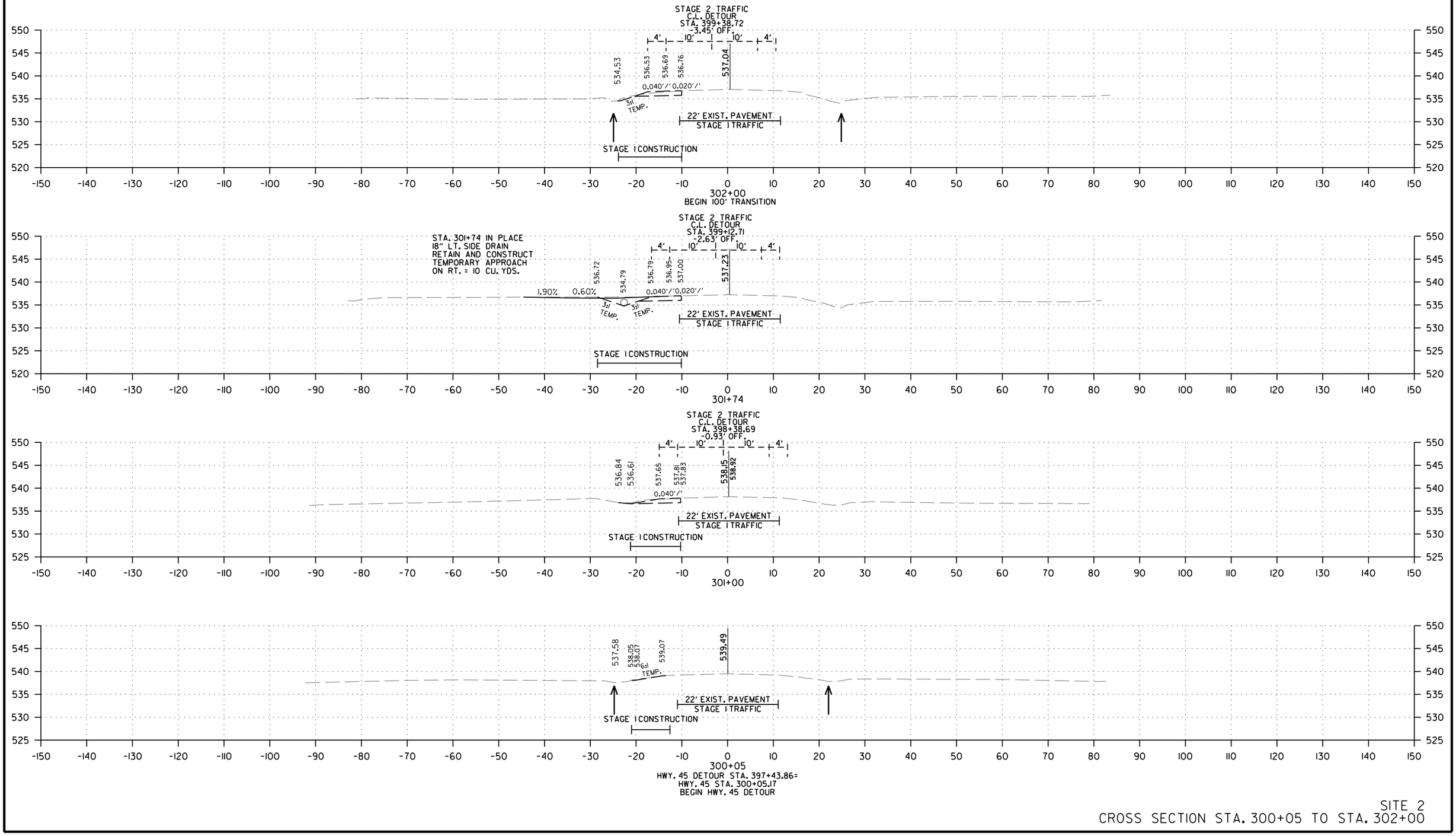

SITE 2
CROSS SECTION STA. 300+05 TO STA. 302+00

ba42315 8/9/2024
R040792.DGN

DATE REVISED	DATE REVISED	FED.RD. DIST.NO.	STATE	JOB NO.	SHEET NO.	TOTAL SHEETS
		6	ARK.	040792	108	122
		CROSS SECTIONS				

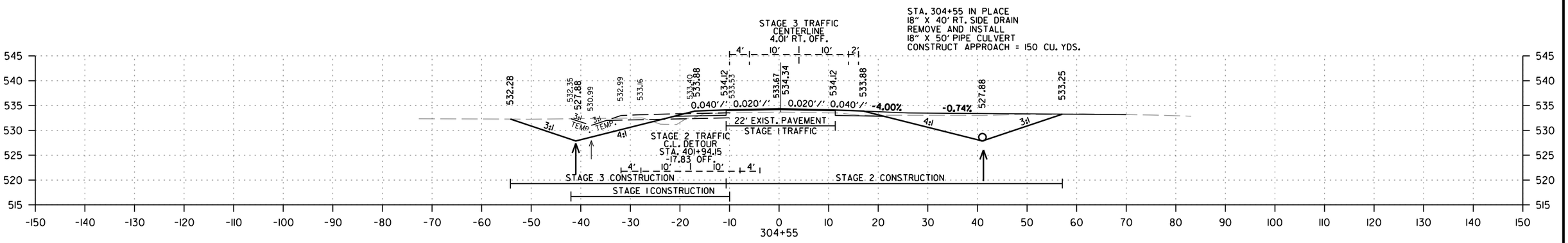

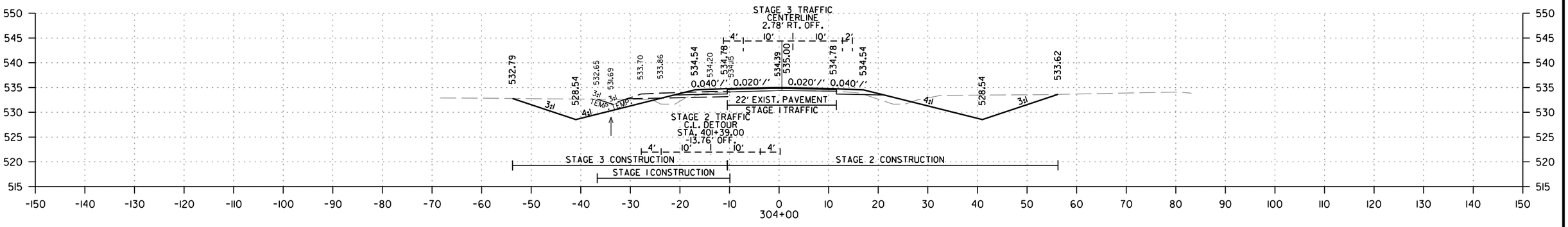

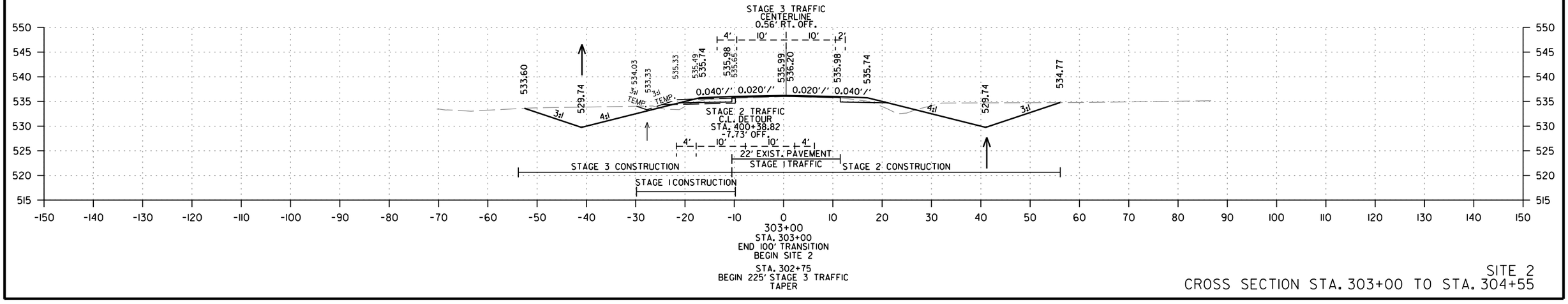

SITE 2
CROSS SECTION STA. 303+00 TO STA. 304+55

ba42315 8/9/2024
R040792.DGN

DATE REVISED	DATE REVISED	FED.RD. DIST.NO.	STATE	JOB NO.	SHEET NO.	TOTAL SHEETS
		6	ARK.	040792	109	122
		CROSS SECTIONS				

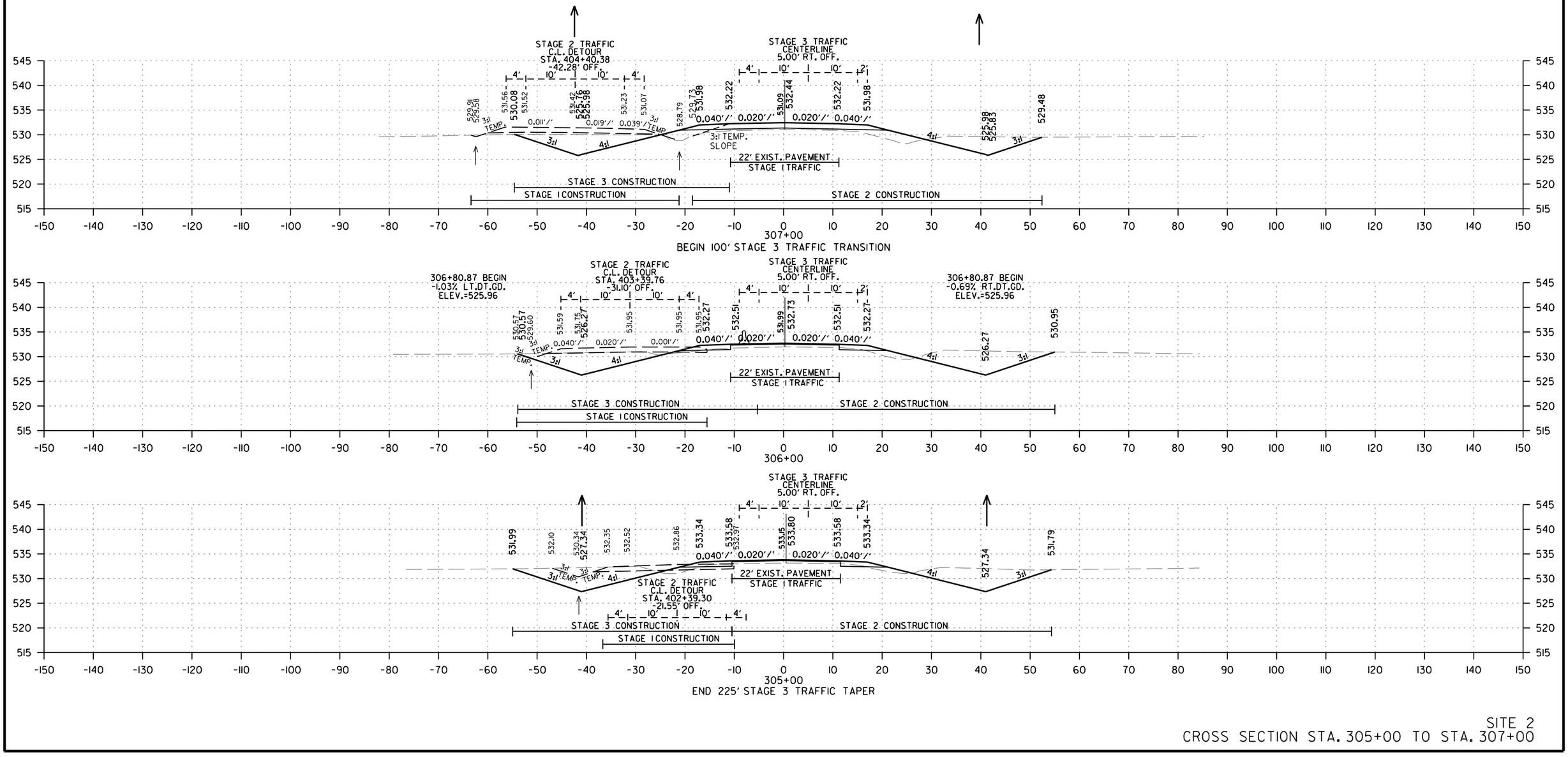

be42315 8/9/2024
R040792.DGN

SITE 2
CROSS SECTION STA. 305+00 TO STA. 307+00

DATE REVISED	DATE REVISED	FED.RD. DIST.NO.	STATE	JOB NO.	SHEET NO.	TOTAL SHEETS
		6	ARK.	040792	110	122
		CROSS SECTIONS				

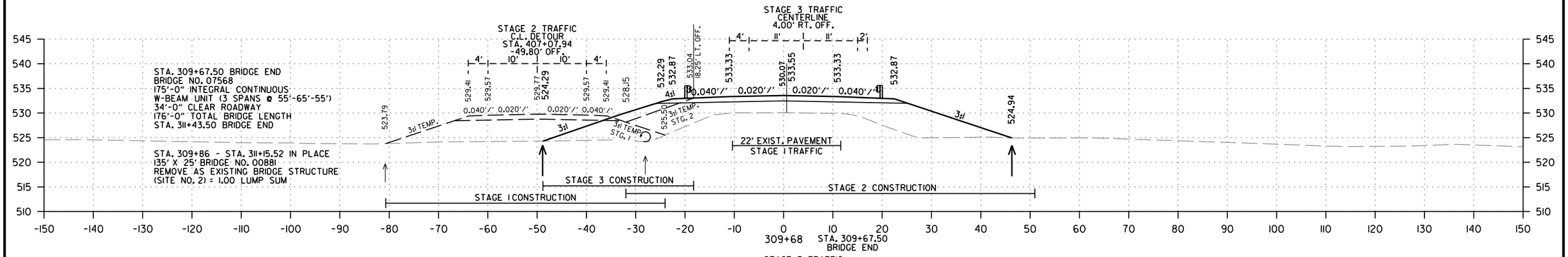

SITE 2
CROSS SECTION STA. 308+00 TO STA. 309+68

ba42315 8/9/2024
R040792.DGN

DATE REVISED	DATE REVISED	FED.RD. DIST.NO.	STATE	JOB NO.	SHEET NO.	TOTAL SHEETS
		6	ARK.	040792	111	122
		CROSS SECTIONS				

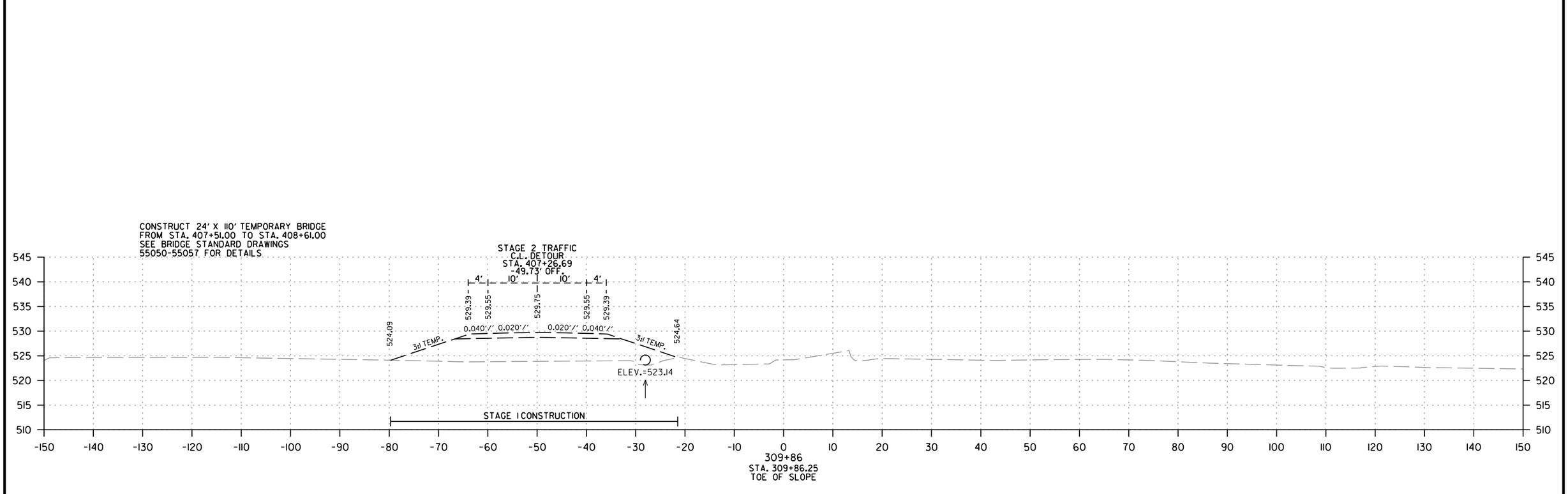

SITE 2
CROSS SECTION STA. 309+86

ba42315 8/9/2024
R040792.DGN

DATE REVISED	DATE REVISED	FED.RD. DIST.NO.	STATE	JOB NO.	SHEET NO.	TOTAL SHEETS
		6	ARK.	040792	112	122
		CROSS SECTIONS				

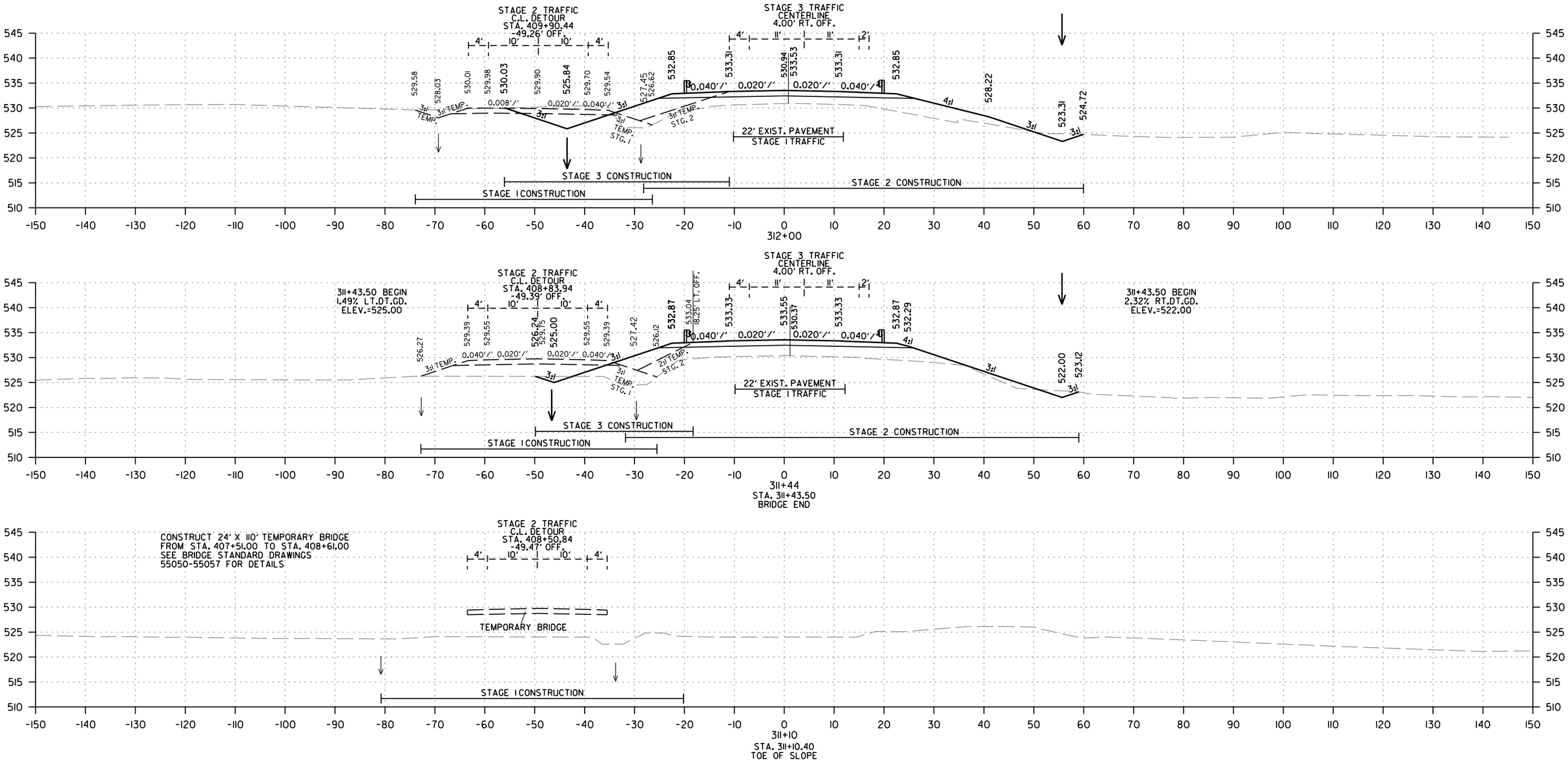

SITE 2
CROSS SECTION STA. 311+10 TO STA. 312+00

ba42315 8/9/2024
R040792.DGN

DATE REVISED	DATE REVISED	FED.RD. DIST.NO.	STATE	JOB NO.	SHEET NO.	TOTAL SHEETS
		6	ARK.	040792	113	122
		CROSS SECTIONS				

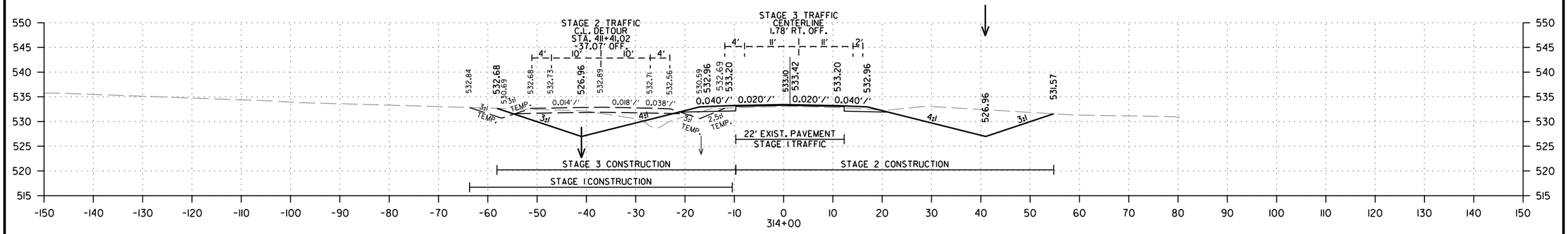

ba42315 8/9/2024
R040792.DGN

SITE 2
CROSS SECTION STA. 313+00 TO STA. 314+00

DATE REVISED	DATE REVISED	FED.RD. DIST.NO.	STATE	JOB NO.	SHEET NO.	TOTAL SHEETS
		6	ARK.	040792	114	122
		CROSS SECTIONS				

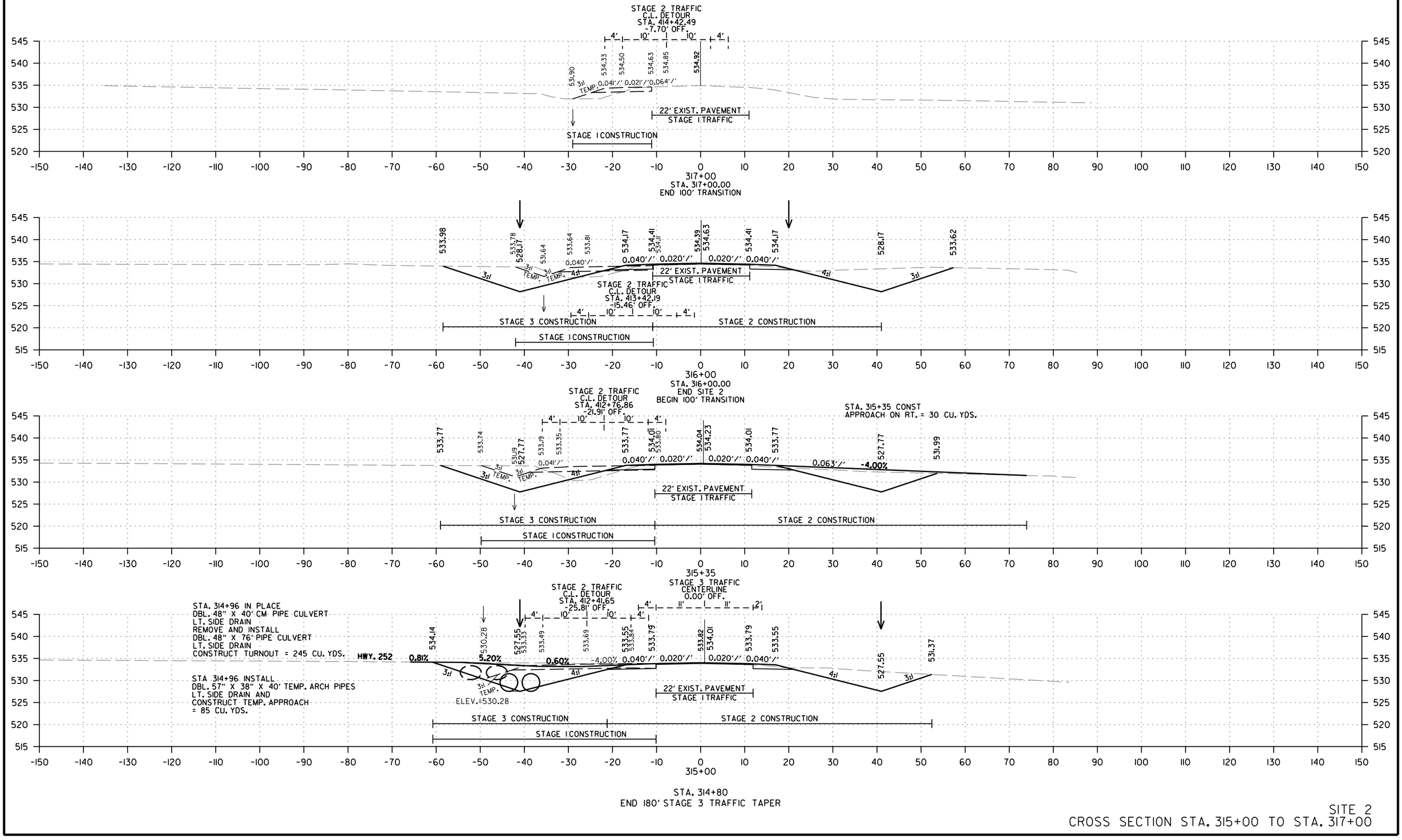

SITE 2
CROSS SECTION STA. 315+00 TO STA. 317+00

be42315 8/9/2024
R040792.DGN

DATE REVISED	DATE REVISED	FED.RD. DIST.NO.	STATE	JOB NO.	SHEET NO.	TOTAL SHEETS
		6	ARK.	040792	115	122
		CROSS SECTIONS				

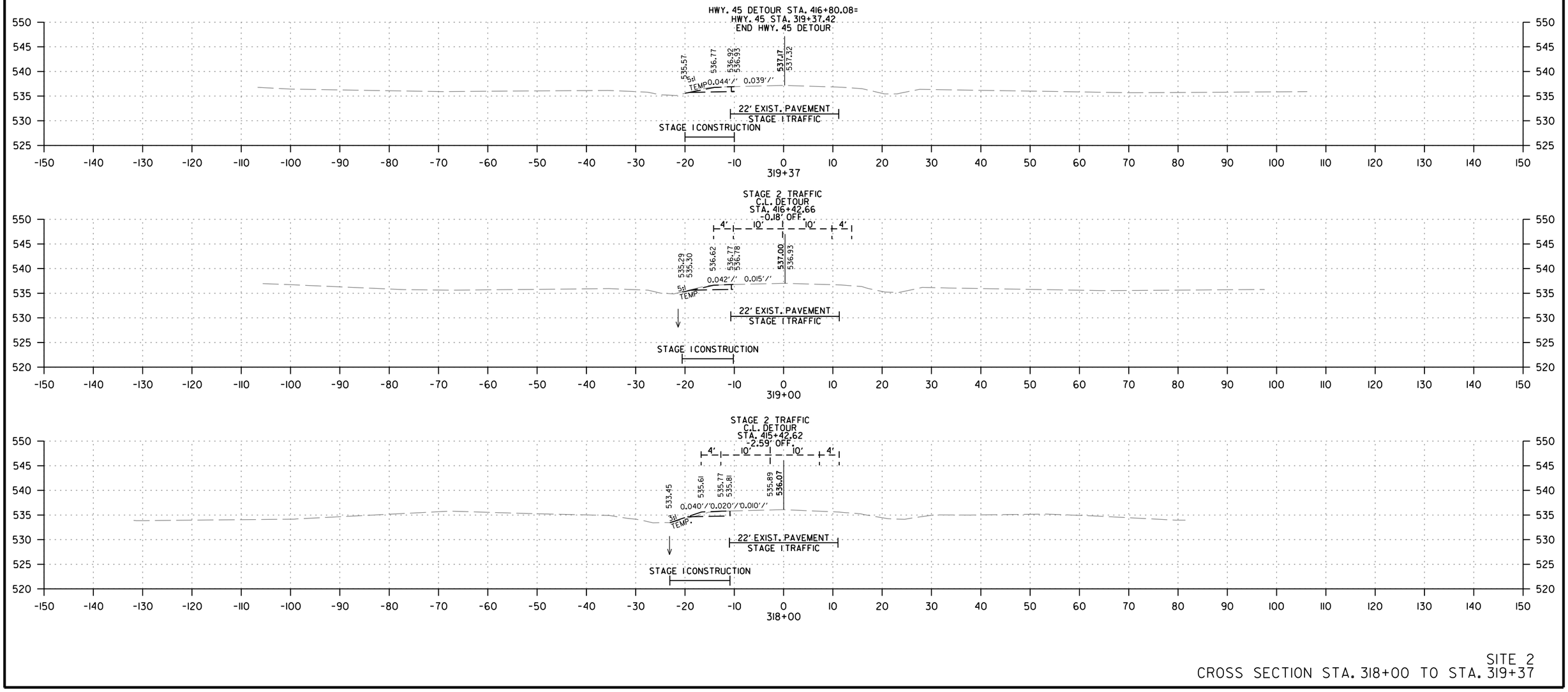

SITE 2
CROSS SECTION STA. 318+00 TO STA. 319+37

be42315 8/9/2024
R040792.DGN

DATE REVISED	DATE REVISED	FED.RD. DIST.NO.	STATE	JOB NO.	SHEET NO.	TOTAL SHEETS
		6	ARK.	040792	116	122
		CROSS SECTIONS				

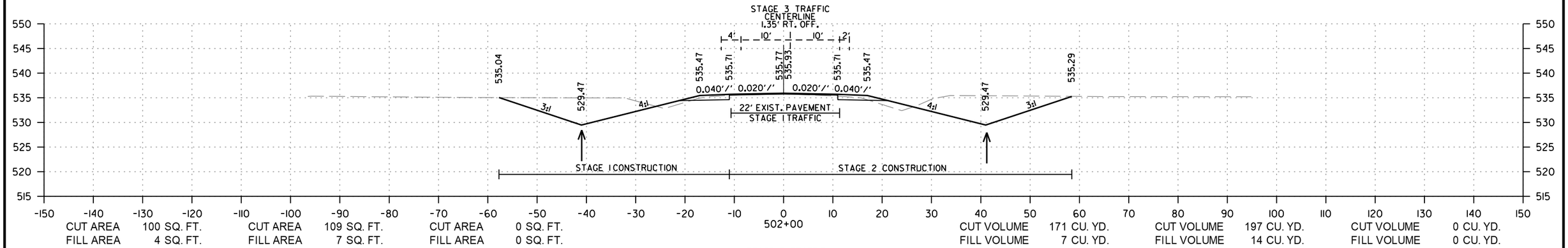

CUT AREA	100 SQ. FT.	CUT AREA	109 SQ. FT.	CUT AREA	0 SQ. FT.	CUT VOLUME	171 CU. YD.
FILL AREA	4 SQ. FT.	FILL AREA	7 SQ. FT.	FILL AREA	0 SQ. FT.	FILL VOLUME	7 CU. YD.

CUT VOLUME	197 CU. YD.	CUT VOLUME	0 CU. YD.				
FILL VOLUME	14 CU. YD.	FILL VOLUME	0 CU. YD.				

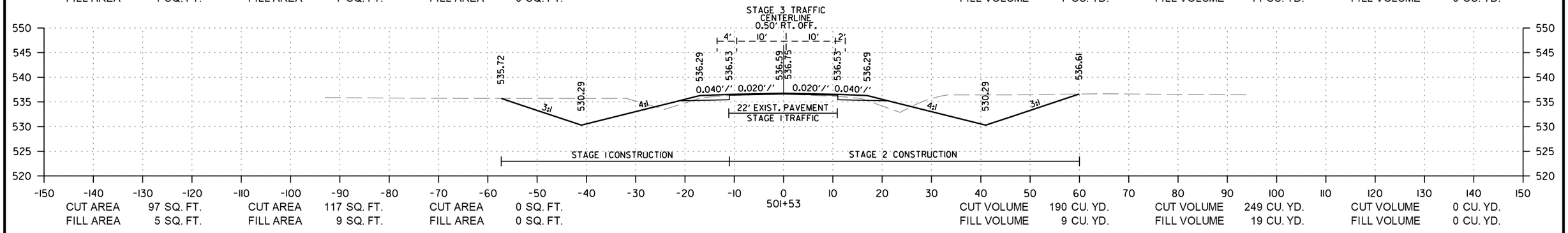

CUT AREA	97 SQ. FT.	CUT AREA	117 SQ. FT.	CUT AREA	0 SQ. FT.	CUT VOLUME	190 CU. YD.
FILL AREA	5 SQ. FT.	FILL AREA	9 SQ. FT.	FILL AREA	0 SQ. FT.	FILL VOLUME	9 CU. YD.

CUT VOLUME	249 CU. YD.	CUT VOLUME	0 CU. YD.				
FILL VOLUME	19 CU. YD.	FILL VOLUME	0 CU. YD.				

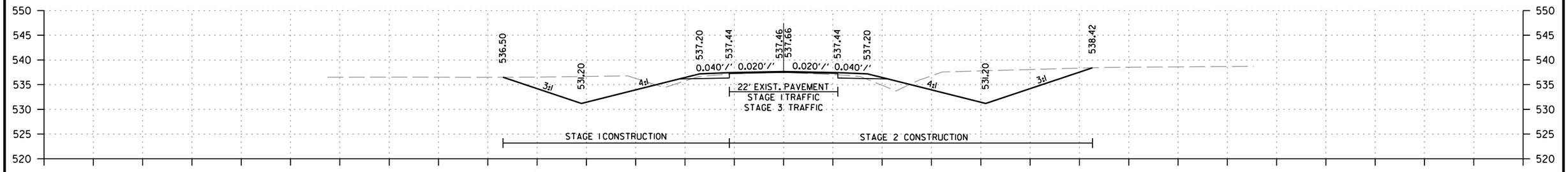

CUT AREA	97 SQ. FT.	CUT AREA	136 SQ. FT.	CUT AREA	0 SQ. FT.	CUT VOLUME	180 CU. YD.
FILL AREA	5 SQ. FT.	FILL AREA	10 SQ. FT.	FILL AREA	0 SQ. FT.	FILL VOLUME	8 CU. YD.

CUT VOLUME	252 CU. YD.	CUT VOLUME	0 CU. YD.				
FILL VOLUME	19 CU. YD.	FILL VOLUME	0 CU. YD.				

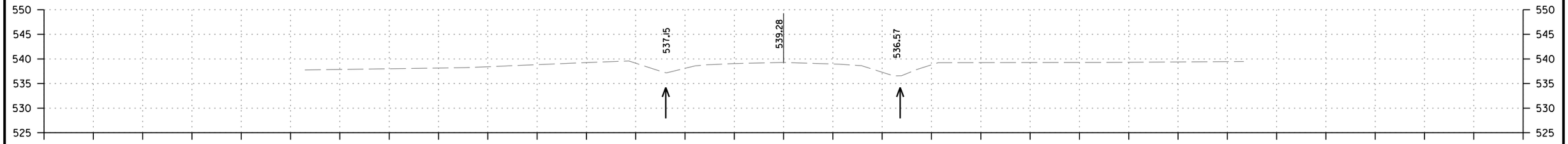

CUT AREA	0 SQ. FT.	CUT AREA	0 SQ. FT.	CUT AREA	0 SQ. FT.	CUT VOLUME	0 CU. YD.
FILL AREA	0 SQ. FT.	FILL AREA	0 SQ. FT.	FILL AREA	0 SQ. FT.	FILL VOLUME	0 CU. YD.

CUT VOLUME	0 CU. YD.	CUT VOLUME	0 CU. YD.				
FILL VOLUME	0 CU. YD.	FILL VOLUME	0 CU. YD.				

SITE 3
STA. 500+00 TO STA. 502+00

ba42315 8/9/2024
R040792.DGN MicroStation v8.11.9.578

DATE REVISED	DATE REVISED	FED.RD. DIST.NO.	STATE	JOB NO.	SHEET NO.	TOTAL SHEETS
		6	ARK.	040792	117	122
		CROSS SECTIONS				

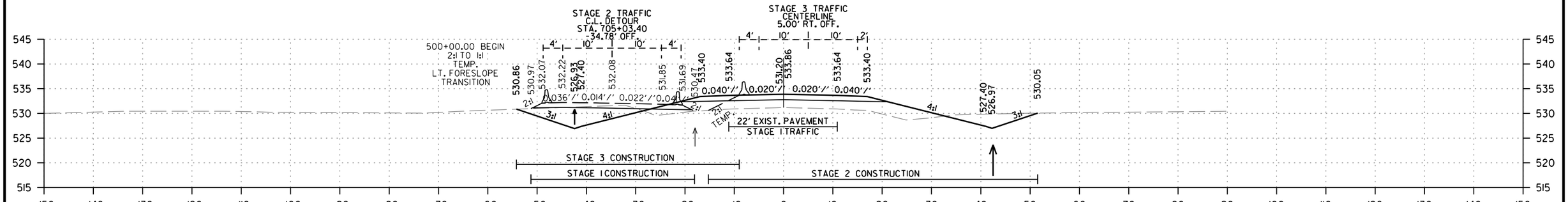

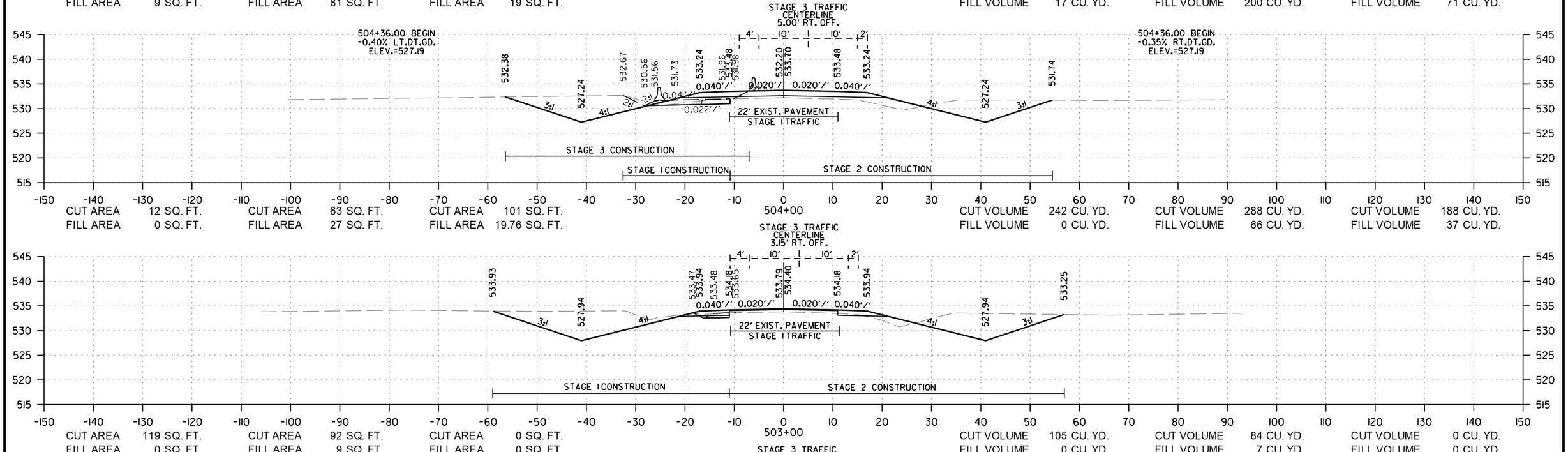

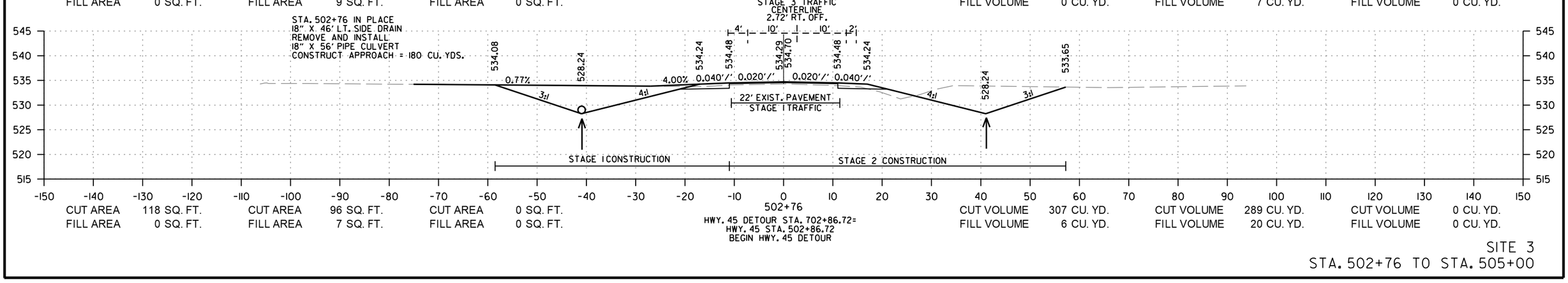

SITE 3
STA. 502+76 TO STA. 505+00

be42315 8/9/2024 MicroStation v8.11.9.578
R040792.DGN

DATE REVISED	DATE REVISED	FED.RD. DIST.NO.	STATE	JOB NO.	SHEET NO.	TOTAL SHEETS
		6	ARK.	040792	118	122
		CROSS SECTIONS				

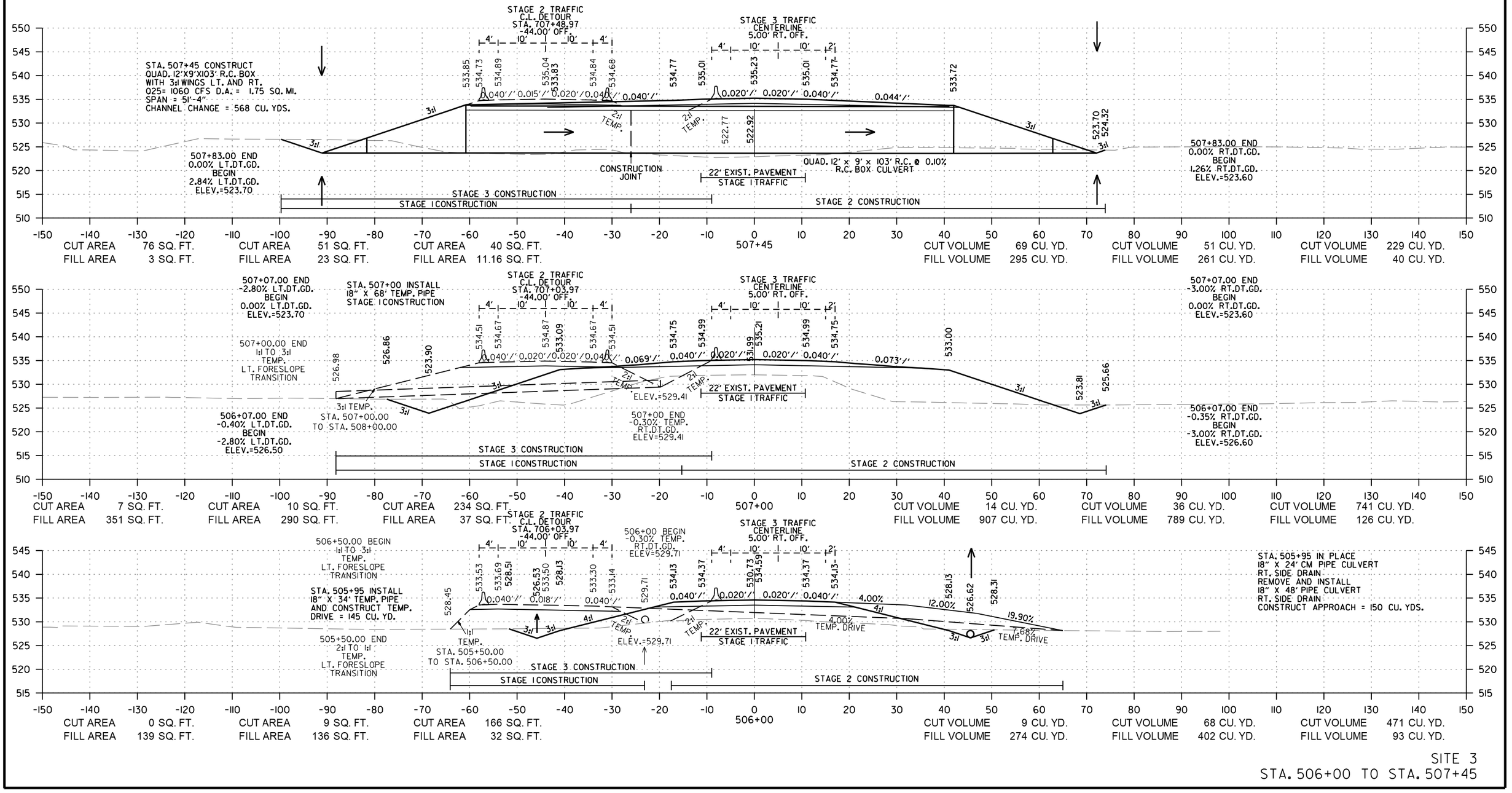

SITE 3
STA. 506+00 TO STA. 507+45

ba42315 8/9/2024
R040792.DGN MicroStation v8.11.9.578

DATE REVISED	DATE REVISED	FED.RD. DIST.NO.	STATE	JOB NO.	SHEET NO.	TOTAL SHEETS
		6	ARK.	040792	119	122
		CROSS SECTIONS				

SITE 3
STA. 508+00 TO STA. 510+00

ba42315 8/9/2024
R040792.DGN MicroStation v8.11.9.578

DATE REVISED	DATE REVISED	FED.RD. DIST.NO.	STATE	JOB NO.	SHEET NO.	TOTAL SHEETS
		6	ARK.	040792	120	122
		CROSS SECTIONS				

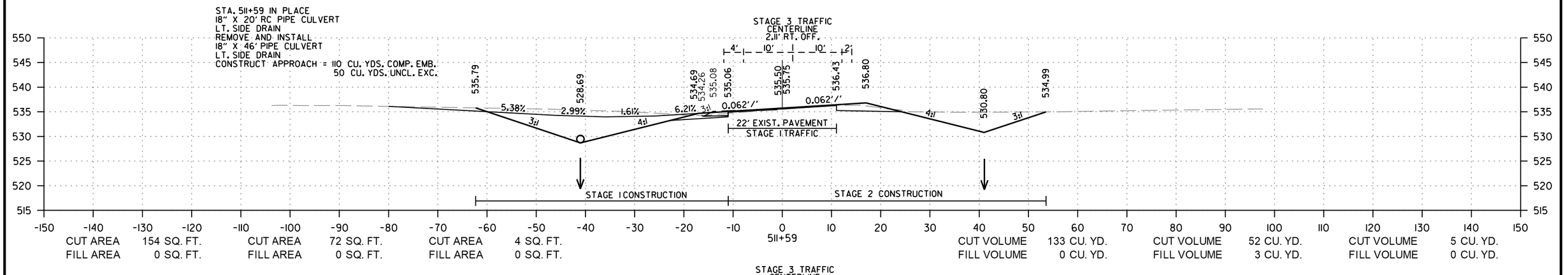

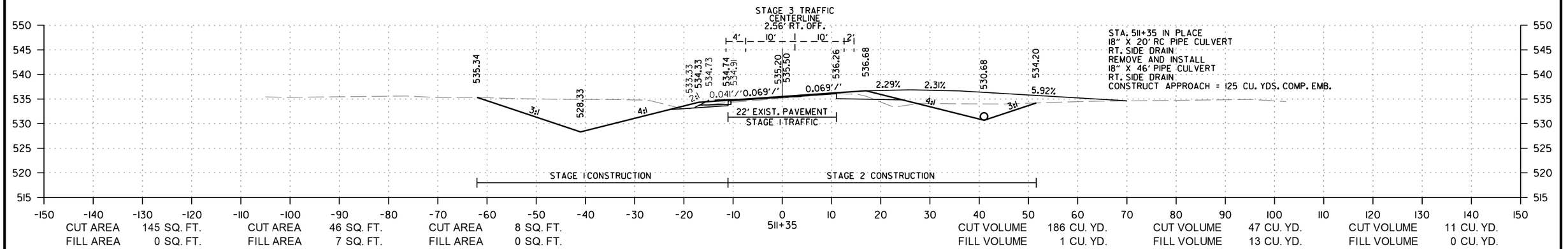

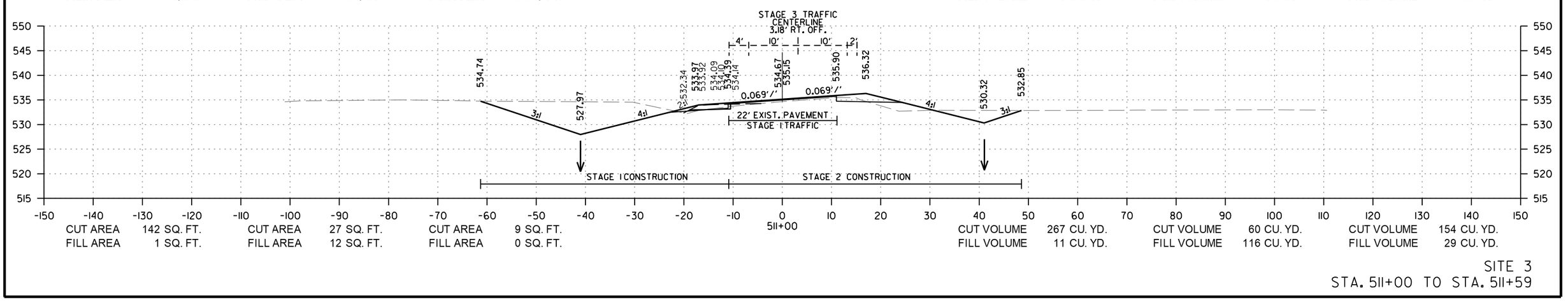

SITE 3
STA. 511+00 TO STA. 511+59

ba42315 8/9/2024
R040792.DGN MicroStation v8.11.9.578

DATE REVISED	DATE REVISED	FED.RD. DIST.NO.	STATE	JOB NO.	SHEET NO.	TOTAL SHEETS
		6	ARK.	040792	121	122
		CROSS SECTIONS				

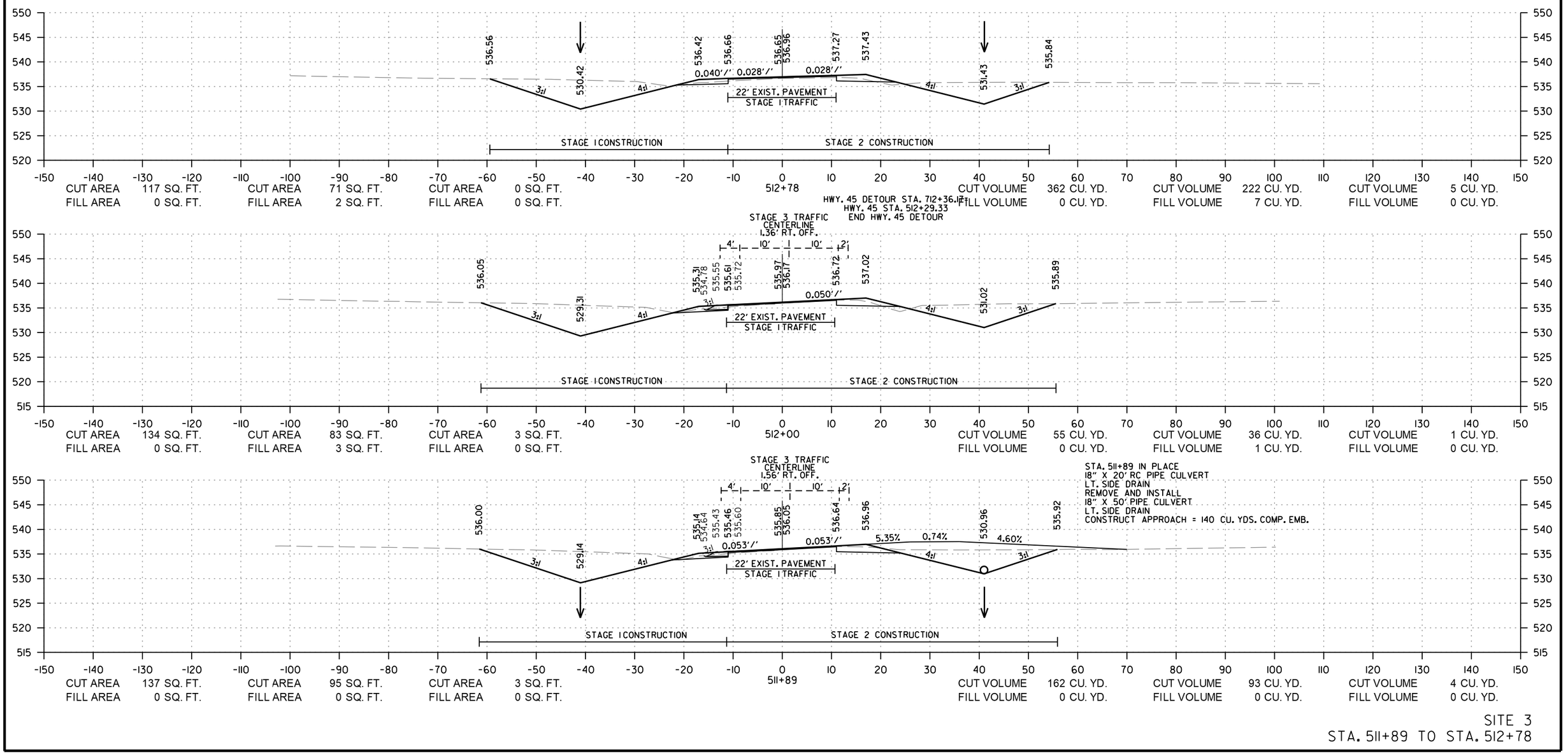

SITE 3
STA. 511+89 TO STA. 512+78

ba42315 8/9/2024
R040792.DGN MicroStation v8.11.9.578

DATE REVISED	DATE REVISED	FED.RD. DIST.NO.	STATE	JOB NO.	SHEET NO.	TOTAL SHEETS
		6	ARK.	040792	122	122
		CROSS SECTIONS				

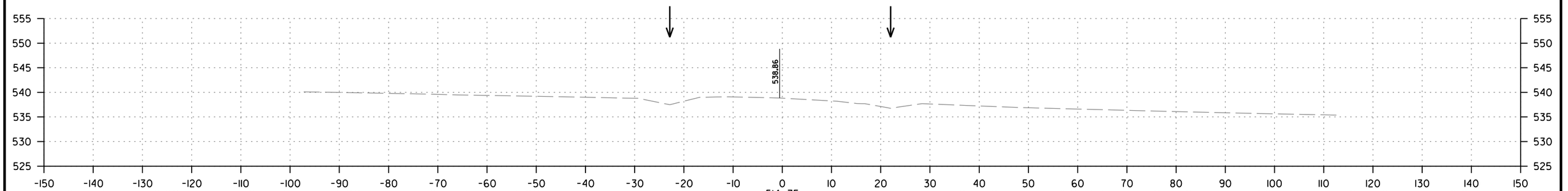

CUT AREA 0 SQ. FT. | CUT AREA 0 SQ. FT. | CUT AREA 0 SQ. FT.
FILL AREA 0 SQ. FT. | FILL AREA 0 SQ. FT. | FILL AREA 0 SQ. FT.

CUT VOLUME 0 CU. YD. | CUT VOLUME 0 CU. YD. | CUT VOLUME 0 CU. YD.
FILL VOLUME 0 CU. YD. | FILL VOLUME 0 CU. YD. | FILL VOLUME 0 CU. YD.

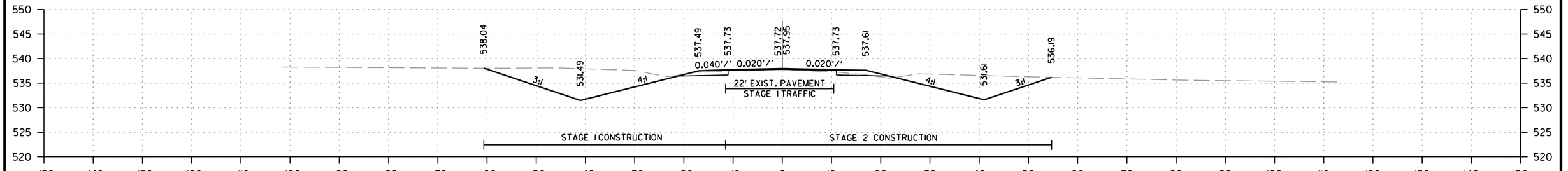

CUT AREA 138 SQ. FT. | CUT AREA 87 SQ. FT. | CUT AREA 0 SQ. FT.
FILL AREA 0 SQ. FT. | FILL AREA 1 SQ. FT. | FILL AREA 0 SQ. FT.

CUT VOLUME 349 CU. YD. | CUT VOLUME 213 CU. YD. | CUT VOLUME 0 CU. YD.
FILL VOLUME 0 CU. YD. | FILL VOLUME 4 CU. YD. | FILL VOLUME 0 CU. YD.

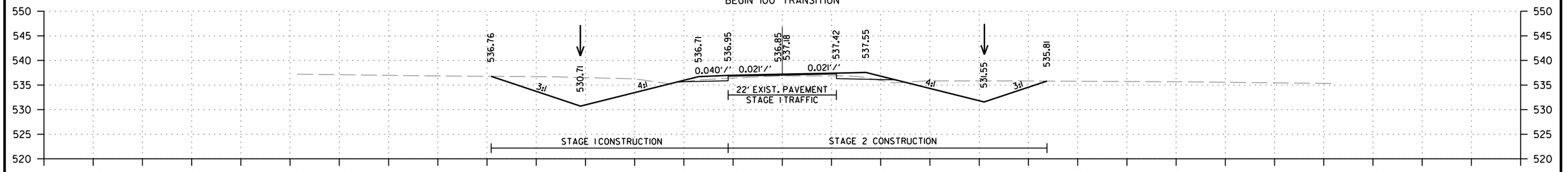

CUT AREA 114 SQ. FT. | CUT AREA 67 SQ. FT. | CUT AREA 0 SQ. FT.
FILL AREA 0 SQ. FT. | FILL AREA 2 SQ. FT. | FILL AREA 0 SQ. FT.

CUT VOLUME 94 CU. YD. | CUT VOLUME 56 CU. YD. | CUT VOLUME 0 CU. YD.
FILL VOLUME 0 CU. YD. | FILL VOLUME 2 CU. YD. | FILL VOLUME 0 CU. YD.

SITE 3
STA. 513+00 TO STA. 515+00

be42315 8/9/2024
R040792.DGN MicroStation v8.11.9.578

DATE REVISED	DATE FILMED	DATE REVISED	DATE FILMED	FED. ROAD DIST. NO.	STATE	FED. AID PROJ. NO.	SHEET NO.	TOTAL SHEETS
				6	ARK.			
				JOB NO.				

1 EMBANKMENT & BACKFILL 55000

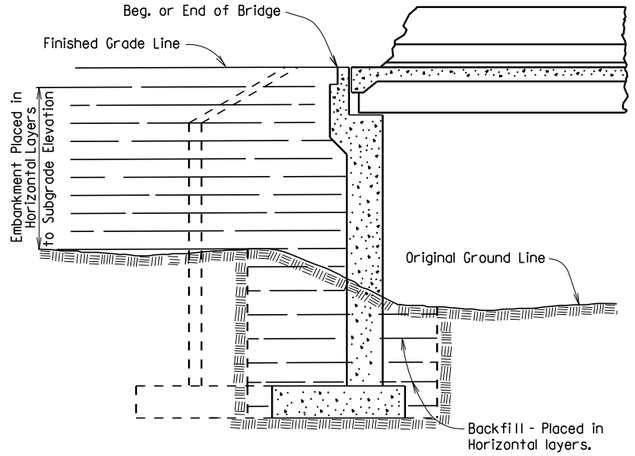

EMBANKMENT CONSTRUCTION AND FOOTING BACKFILL AT VERTICAL WALL ABUTMENTS

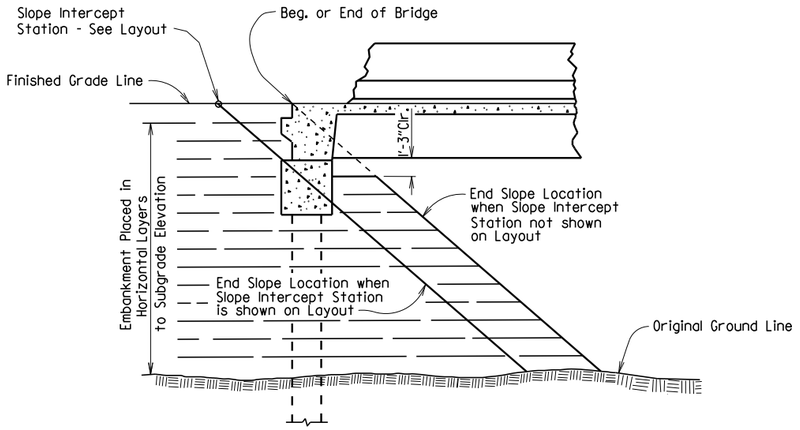

EMBANKMENT CONSTRUCTION AT SPILL-THROUGH PILE END BENTS

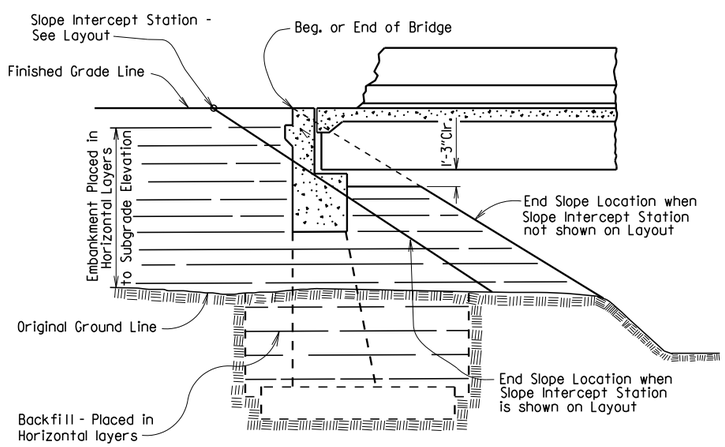

EMBANKMENT CONSTRUCTION AND FOOTING BACKFILL AT SPILL-THROUGH END BENTS

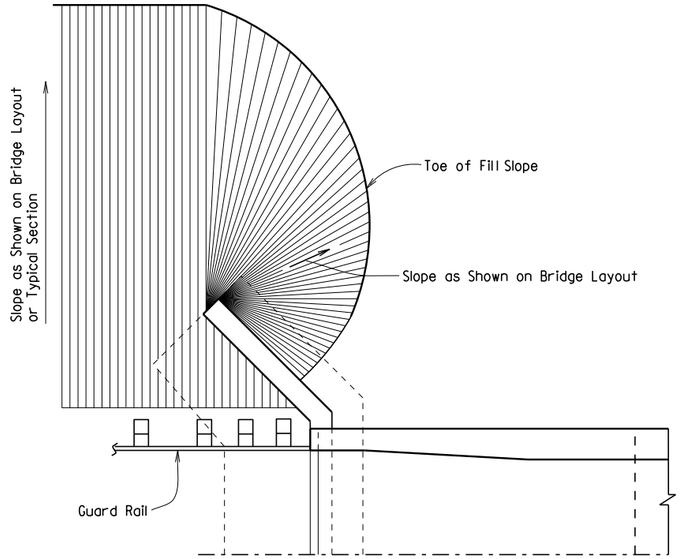

VERTICAL WALL ABUTMENTS

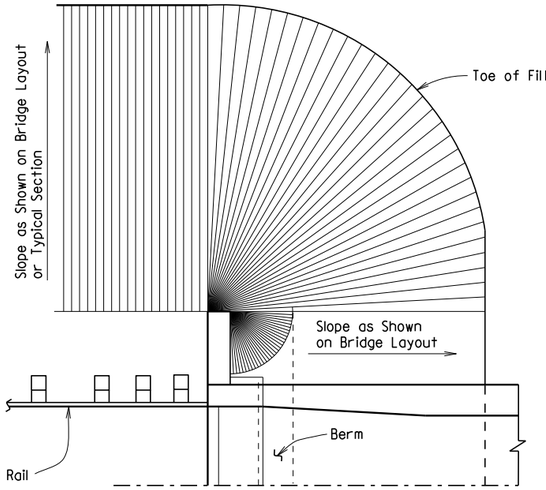

SPILL-THROUGH END BENTS WITH STUB WING

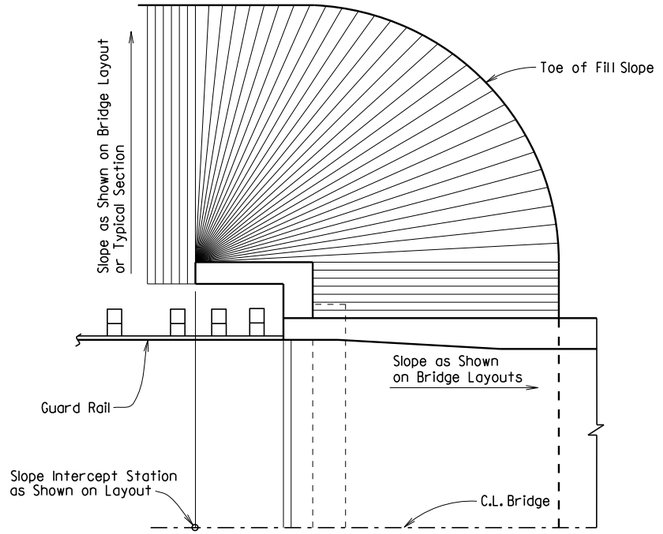

SPILL-THROUGH END BENTS WITH TURNBACK WING

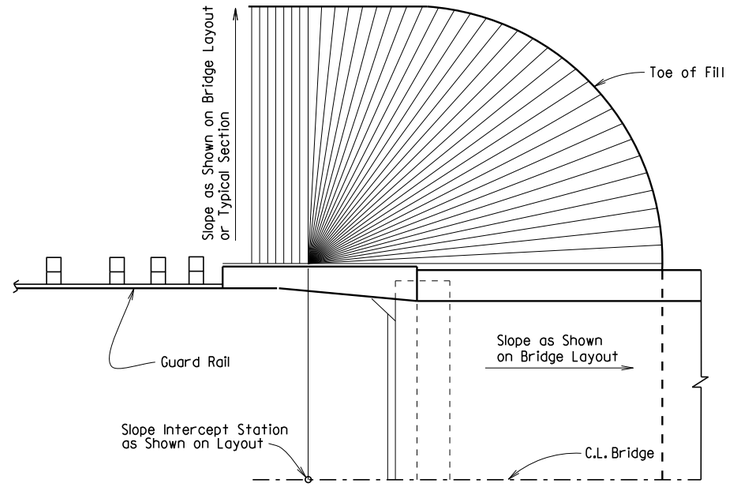

SPILL-THROUGH END BENTS WITH TRANSITION WING

METHOD OF DETERMINING FILL SLOPE LOCATION AT BRIDGE ENDS

GENERAL NOTES

The Bridge End Embankment shall be defined as a section of embankment, not less than 20 feet long adjacent to the bridge end, together with the side slopes and slopes under the bridge end including around the end of wingwalls. Embankment adjacent to structures shall be constructed in 6 inch horizontal layers (loose measure) and compacted by the use of mechanical equipment to the satisfaction of the Engineer. Refer to Subsections 210.09, 210.10 and 801.08 for construction requirements.

STANDARD DETAILS FOR EMBANKMENT CONSTRUCTION AND BACKFILL AT BRIDGE ENDS

ARKANSAS STATE HIGHWAY COMMISSION

LITTLE ROCK, ARK.

DRAWN BY: KDH DATE: 2-27-2014 FILENAME: b55000.dgn

CHECKED BY: BEF DATE: 2-27-2014 SCALE: NO SCALE

DESIGNED BY: STD. DATE: -

DRAWING NO. 55000

DATE REVISED	DATE FILMED	DATE REVISED	DATE FILMED	FED. ROAD DIST. NO.	STATE	FED. AID PROJ. NO.	SHEET NO.	TOTAL SHEETS
				6	ARK.			
				JOB NO.				

1 RIPRAP & EXCAV. 55001

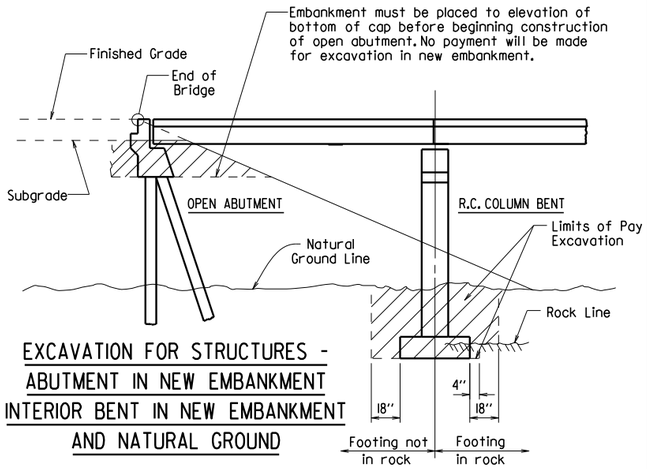

EXCAVATION FOR STRUCTURES - ABUTMENT IN NEW EMBANKMENT INTERIOR BENT IN NEW EMBANKMENT AND NATURAL GROUND

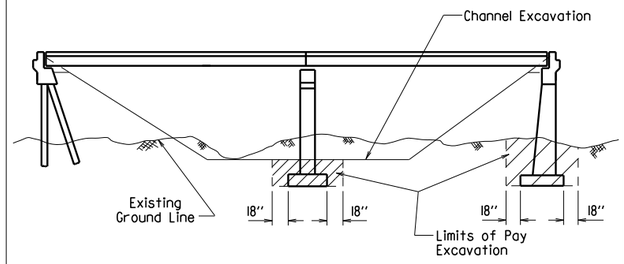

EXCAVATION FOR STRUCTURES - BRIDGE LOCATION WITH DESIGNATED CHANNEL CHANGE

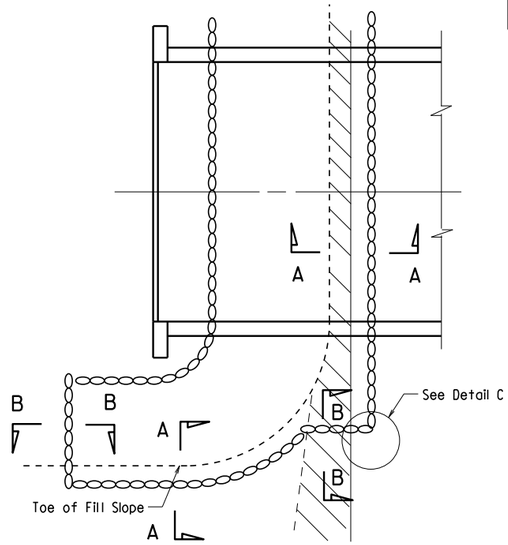

PLAN OF DUMPED RIPRAP

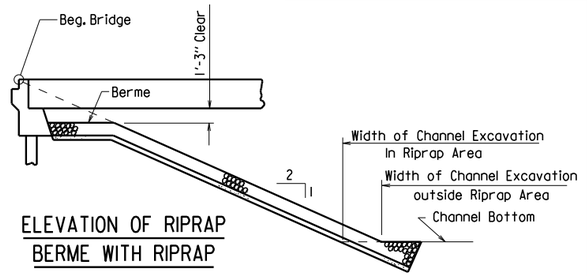

ELEVATION OF RIPRAP BERME WITH RIPRAP

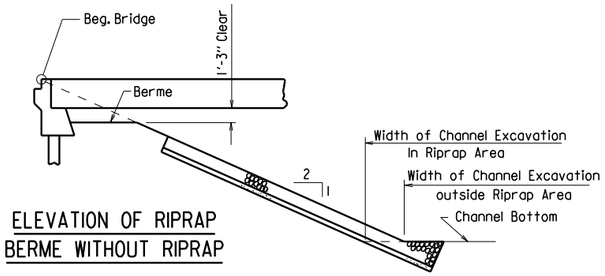

ELEVATION OF RIPRAP BERME WITHOUT RIPRAP

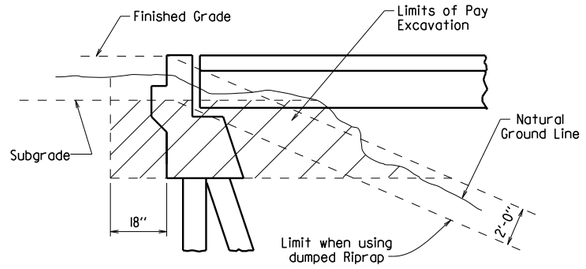

EXCAVATION FOR STRUCTURES - ABUTMENT IN NATURAL GROUND

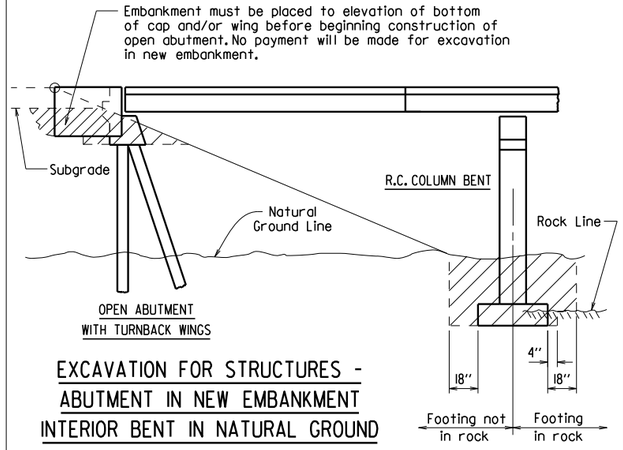

EXCAVATION FOR STRUCTURES - ABUTMENT IN NEW EMBANKMENT INTERIOR BENT IN NATURAL GROUND

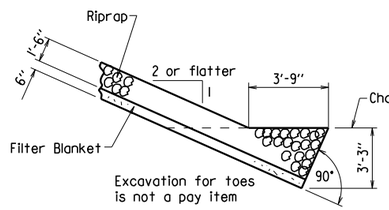

SECTION A-A

(Toe Excavation in Soil)

SECTION B-B

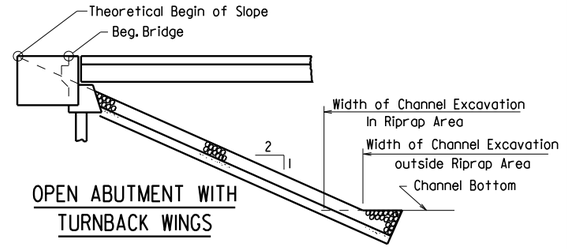

OPEN ABUTMENT WITH TURNBACK WINGS

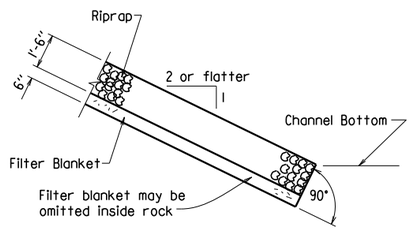

SECTION A-A

(Toe Excavation in Rock)

Note : Use this type of toe when rock is encountered which is in a stable condition.

Note : In lieu of an aggregate filter blanket, a synthetic fiber geotextile fabric complying with the requirements of Subsection 816.02(e) may be used.

Note : Details for computing excavation for structures are included for information as to how plan quantities were calculated and for use when adjusting quantities when changing footing elevation.

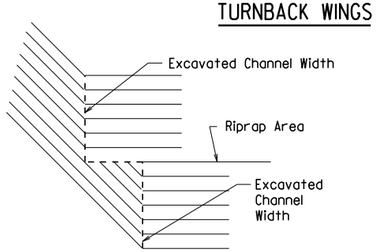

DETAIL C

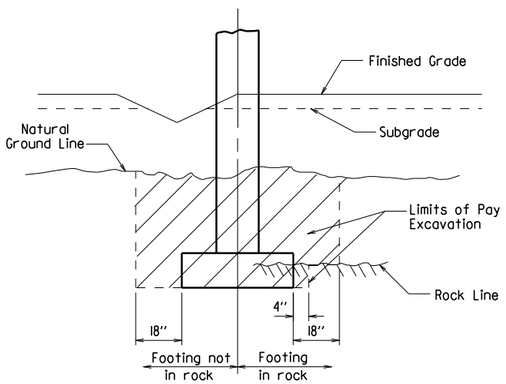

EXCAVATION FOR STRUCTURES - BENT IN ROADWAY FILL SECTION AND NATURAL GROUND

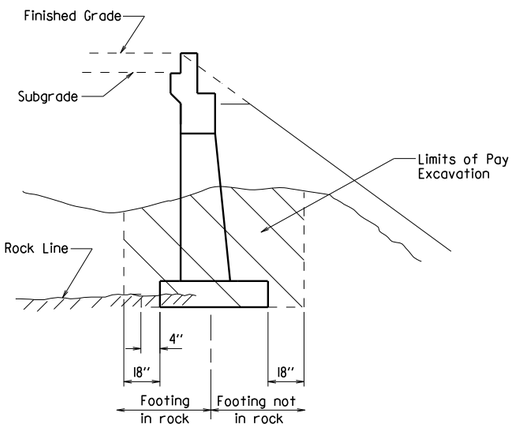

EXCAVATION FOR STRUCTURES - ABUTMENT IN NATURAL GROUND AND NEW EMBANKMENT

STANDARD DETAILS FOR DUMPED RIPRAP AND FILTER BLANKET AND COMPUTING EXCAVATION FOR STRUCTURES

ARKANSAS STATE HIGHWAY COMMISSION

LITTLE ROCK, ARK.

DRAWN BY: KDH DATE: 2-27-2014 FILENAME: b5500l.dgn

CHECKED BY: BEF DATE: 2-27-2014 SCALE: NO SCALE

DESIGNED BY: STD. DATE:

DRAWING NO. 55001

DATE REVISED	DATE FILMED	DATE REVISED	DATE FILMED	FED. ROAD DIST. NO.	STATE	FED. AID PROJ. NO.	SHEET NO.	TOTAL SHEETS
3/24/16				6	ARK.			
				JOB NO.				
				①	BRIDGE DECK FORMS		55005	

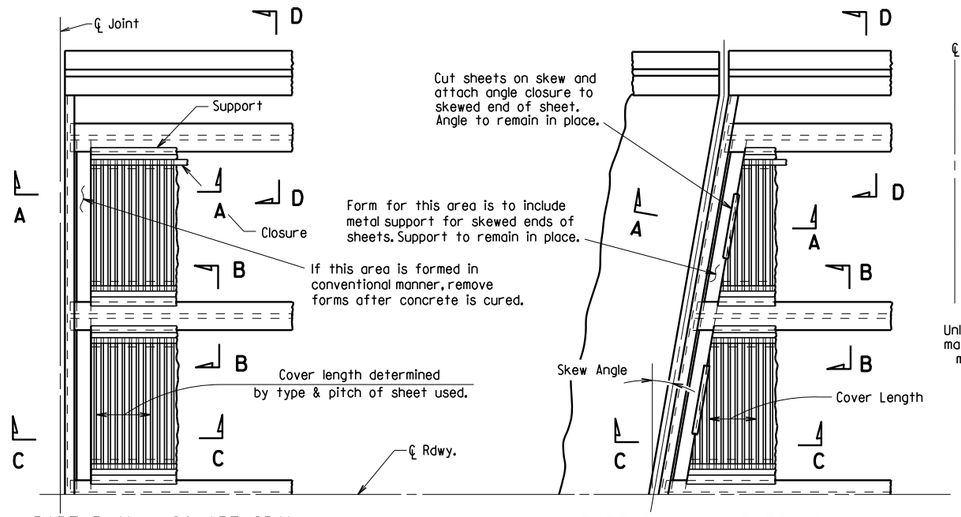

PART PLAN - SQUARE SPAN

3/8" = 1'-0"

PART PLAN - SKEWED SPAN

3/8" = 1'-0"

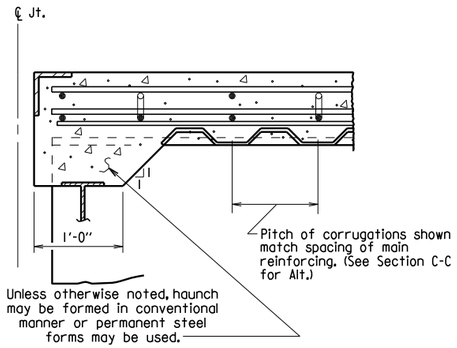

SECTION A-A

N.T.S.
(Angle at end of span)

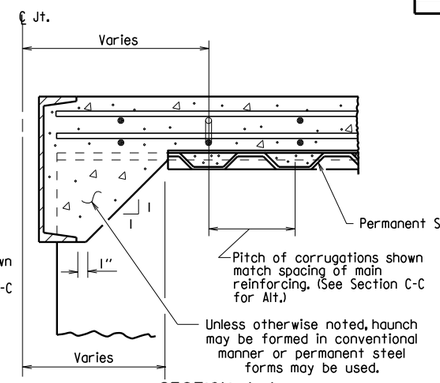

SECTION A-A

N.T.S.
(Channel at end of span)

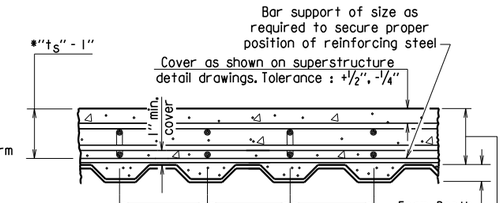

SECTION C-C

1" = 1'-0"

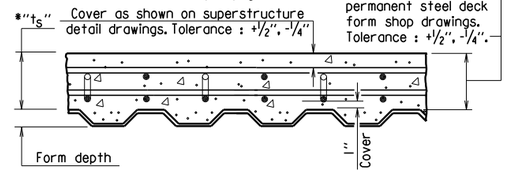

SECTION C-C - ALTERNATE

1" = 1'-0"
(Applicable when corrugations do not match spacing of main reinforcement)

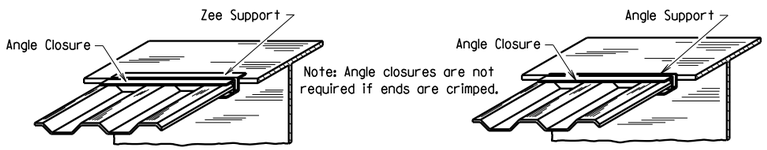

SKETCH OF PERMISSIBLE SUPPORTS

N.T.S.

*t_s = slab thickness as shown on superstructure detail drawings.

GENERAL NOTES

Permanent steel deck forms may be used at the Contractor's option and shall be at no additional cost to the Department. Such use may result in changes to the dead load deflection of the girder. Any cost for adjustments due to a change in the dead load deflection will be borne by the Contractor. Payment for deck concrete and structural steel will not be increased due to use of permanent steel deck forms.

Permanent steel deck forms shall conform to Subsection 802.14(b). Detailed plans, including detailed calculations and manufacturer's technical brochure, shall be submitted to and approved by the Engineer before work of forming the bridge deck is started.

Welding of form supports to the tension flange of steel girders will be permitted only in areas where shear connectors are used. When welding is not allowed, the method of fastening Z or ∠ supports to the flange must be approved by the Engineer.

Form sheets shall be fastened to supporting members and to each other with galvanized metal screws sufficient in size and number to provide a secure attachment. Alternate methods of attachment must be approved by the Engineer.

When the pitch of form corrugations match the reinforcing spacing, transversely align form sheets across the bridge to maintain the correct orientation of continuous reinforcing bars in the corrugations.

Bar support rods, when used, shall be sized and spaced to adequately support the bottom reinforcing mat at the required position.

High chairs shall be sized to support the top mat of reinforcing at the proper position. High chairs shall be placed at locations shown on the detail drawings.

Specifications: Arkansas State Highway and Transportation Department Standard Specifications for Highway Construction (2014 Edition), with applicable Supplemental Specifications and Special Provisions.

SECTION B-B

1" = 1'-0"
(Showing permissible support for tension flange where shear connectors are used, and for all compression flanges)

③ ⚠ Minimum weld: 1/8" x 1" @ 18". More weld may be required; maximum length per weld = 1 1/2" (typ.)

SECTION B-B

1" = 1'-0"
(Showing permissible support for tension flange where shear connectors are used and for all compression flanges)

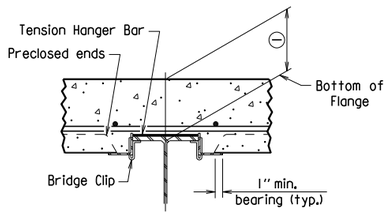

SECTION B-B

1" = 1'-0"
(Showing permissible support for tension flange where shear connectors are not used)

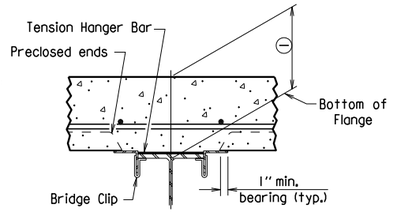

SECTION B-B

1" = 1'-0"
(Showing permissible support for tension flange where shear connectors are not used)

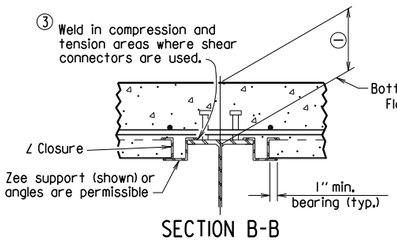

SECTION B-B

1" = 1'-0"
(Showing ∠ Closure)

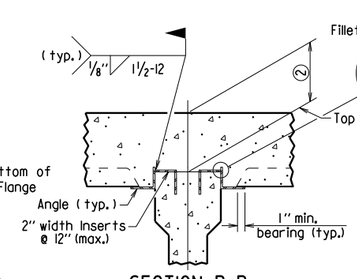

SECTION B-B (FOR CONCRETE GIRDERS)

1" = 1'-0"
(Showing support by Insert cast in girder)

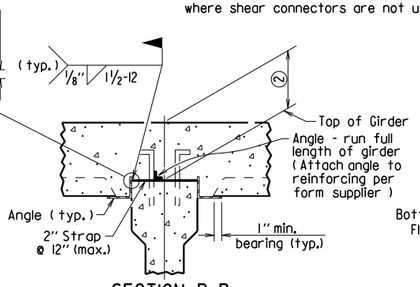

SECTION B-B (FOR CONCRETE GIRDERS)

1" = 1'-0"
(Showing support by Strap)

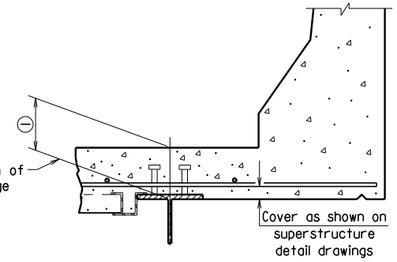

SECTION D-D

1" = 1'-0"
Note: Only Bottom Reinforcing is shown.

① Distance from top of slab to bottom of top flange as measured at centerline girder and as shown on superstructure detail drawings. This dimension may vary within the following limits to maintain the grade and slab thickness tolerances : Minimum - occurs when either the top flange or the support angle leg contacts the bottom reinforcing steel; Maximum = t_S + 1 3/4" + flange thickness. See Section C-C for slab thickness tolerance between adjacent girder flanges.

② Distance from top of slab to top of girder as measured at centerline girder and as shown on superstructure detail drawings. This dimension may vary within the following limits to maintain the grade and slab thickness tolerances : Minimum - occurs when either the top of girder or the support angle leg contacts the bottom reinforcing steel; Maximum - value shown on the superstructure detail drawings when removable forms are used. See Section C-C for slab thickness tolerance between adjacent girder flanges.

⚠ Revised weld dimension by KWY, Ck'd. by BEF, 3/24/16.

STANDARD DETAILS FOR PERMANENT STEEL BRIDGE DECK FORMS FOR STEEL & CONCRETE GIRDER SPANS

ARKANSAS STATE HIGHWAY COMMISSION

LITTLE ROCK, ARK.

DRAWN BY:	KDH	DATE:	2-27-2014	FILENAME:	b55005.dgn
CHECKED BY:	BEF	DATE:	2-27-2014	SCALE:	NONE
DESIGNED BY:	STD.	DATE:	—		

DRAWING NO. 55005

DATE REVISED	DATE FILMED	DATE REVISED	DATE FILMED	FED. ROAD DIST. NO.	STATE	FED. AID PROJ. NO.	SHEET NO.	TOTAL SHEETS
				6	ARK.			
				JOB NO.				
				①		GENERAL NOTES		55006

GENERAL NOTES

These GENERAL NOTES are applicable unless otherwise shown in the Plan Details, Special Provisions, or Supplemental Specifications.

CONSTRUCTION SPECIFICATIONS: Arkansas State Highway and Transportation Department Standard Specifications for Highway Construction (2014 Edition) with applicable Supplemental Specifications and Special Provisions. Section and Subsection refer to the Standard Specifications.

DESIGN SPECIFICATIONS: See Bridge Layout(s).

SUPERSTRUCTURE NOTES:

MATERIALS AND STRENGTHS:

Class S(AE) Concrete	f'c =	4,000 psi
Reinforcing Steel (Gr. 60, AASHTO M 31 or M 322, Type A)	fy =	60,000 psi
Structural Steel (AASHTO M 270, Gr. 36)	Fy =	36,000 psi
Structural Steel (AASHTO M 270, Gr. 50)	Fy =	50,000 psi
Structural Steel (AASHTO M 270, Gr. 50W)	Fy =	50,000 psi
Structural Steel (AASHTO M 270, Gr. HPS70W)	Fy =	70,000 psi

See Plan Details for Grade(s) of Structural Steel required.

CONCRETE:

All concrete shall be Class S(AE) with a minimum 28 day compressive strength f'c = 4,000 psi. Concrete shall be poured in the dry and all exposed corners shall be chamfered ¾" unless otherwise noted.

The superstructure details shown are for use when removable deck forming is used and are the basis for measurement of Class S(AE) Concrete. See Standard Drawing No. 55005 for allowable modifications and for tolerances when Permanent Steel Bridge Deck Forms are used.

Use of a longitudinal screed is not permitted on any span of a bridge deck with horizontal curvature.

The concrete deck (roadway surface) shall be given a tine finish in accordance with Subsection 802.19 for Class 5 Tined Bridge Roadway Surface Finish. Sidewalks shall receive a broomed finish as specified for final finishing in Subsection 802.19 for Class 6 Broomed Finish. Movement of the finishing machine across new concrete shall be on planks placed on the surface and shall be prohibited for 72 hours after finishing the pour. Sufficient concrete must be placed ahead of the strike-off to fully load the beam or girder. When permitted, the use of a longitudinal strike-off will require that a vertical camber adjustment be made in the strike-off to account for the future dead load deflection due to any railings, median barrier, and sidewalks.

REINFORCING STEEL:

All reinforcing steel shall be Grade 60 conforming to AASHTO M 31 or M 322, Type A, with mill test reports and shall be epoxy coated. The reinforcing steel is to be accurately located in the forms and firmly held in place by steel wire supports, sufficient in number and size to prevent displacement during the course of construction. The wire supports will not be paid for directly, but will be considered subsidiary to the item "Epoxy Coated Reinforcing Steel (Grade 60)".

STRUCTURAL STEEL (COMMON TO W-BEAMS AND PLATE GIRDERS):

Structural steel shall be AASHTO M 270 with grade and payment as specified in the plans. Grade 50W steel shall not be painted and all exposed surfaces shall be cleaned in accordance with Subsection 807.84(e). Grade 36 and Grade 50 steel shall be painted unless otherwise noted and all exposed surfaces shall be cleaned in accordance with Subsection 807.84. Structural steel completely embedded in concrete may be AASHTO M 270, Gr. 36, Gr. 50 or Gr. 50W unless otherwise noted.

Drawings show general features of design only. Shop drawings shall be made in accordance with the specifications, submitted and approval secured before fabrication is begun.

Requests for substitution of structural steel shapes shown with shapes of greater size must be submitted by the Contractor to the Engineer for approval. Steels of equal or greater strengths will be accepted only when shown on the approved shop drawings. Payment will be based on the basis of shapes and materials shown in the plans, and no additional compensation will be made for any adjustments due to substitutions.

All welding that is to be done during fabrication of structural steel, including temporary welds, shall be detailed on the shop drawings and submitted for approval. If additional welds are required, whether permanent or temporary, a formal request with detailed drawings shall be submitted to the Engineer for approval; however, additional welds used for attaching falsework support devices or screed rail supports to the structural steel that do not exceed the limitations of Subsection 802.13 will not require approval prior to construction. All welding shall conform to Subsection 807.26.

Unless otherwise noted, field connections shall be bolted with ¾" ø high-strength bolts using 13/16 " ø open holes. Holes for ¾" ø high-strength bolts may be 15/16 " ø if a washer is supplied for use under both the nut and head of the bolt. The use of oversized holes will not be allowed on main members unless otherwise noted. Bolts shall be placed with heads on the outside face of the exterior beam or girder webs and on the bottom of the beam or girder flanges.

All stud shear connectors shall be granular flux filled, solid fluxed, or equal and shall be automatically end welded in accordance with recommendations of the Manufacturer.

When painting is required, all structural steel except galvanized steel and steel completely encased in concrete shall be painted in accordance with Subsection 807.75. The color of paint shall be as specified in the plans.

STRUCTURAL STEEL (W-BEAMS):

All beams and field splice plates, and all diaphragms and connection plates attached to horizontally curved beams are considered main load carrying members and shall meet the Longitudinal Charpy V-Notch Test specified in Subsection 807.05. This work and material will not be paid for directly, but shall be considered subsidiary to the item "Structural Steel in Beam Spans (M 270, Gr. ___)".

All beams in continuous units and simple spans with field splices shall be blocked in their true position in the shop in groups as specified in Subsection 807.54(b)(2) with the webs horizontal. The camber, length of sections, distance between bearings, and openings of joints shall be measured and this information shall become part of the permanent records. The component parts shall be match marked in this assembly and these marks shall be shown on the erection diagram.

All beams in simple spans without field splices shall be blocked in their true position with webs horizontal. The camber, distance between bearings, and openings of joints shall be measured and this information shall become part of the permanent records.

Flange field splice plates shall be cut and fabricated so that the primary direction of rolling is parallel to the direction of the main tensile and/or compressive stresses.

All beam dimensions are based on a temperature of 60 degrees F. A tolerance of ¼" +/- is allowed for camber.

Bent plate diaphragms for horizontally curved beams shall be cut and fabricated so that the primary direction of rolling is parallel to the direction of the main tensile and/or compressive stresses. Bent plate diaphragms for straight beams may be cut and fabricated in accordance with Subsection 807.35 or as required for horizontally curved beams.

Unless otherwise noted, diaphragms shall be installed as beams are erected. All bolts in diaphragms and field splices shall be installed and tightened in accordance with Subsection 807.71 prior to pouring the concrete deck.

STRUCTURAL STEEL (PLATE GIRDERS):

All references to cross-frames shall include "X" or "K" types.

All girder web and flange plates, all field splice plates, and all diaphragms, cross-frames and connection plates attached to horizontally curved girders are considered main load carrying members and shall meet the Longitudinal Charpy V-Notch Test specified in Subsection 807.05. This work and material will not be paid for directly, but shall be considered subsidiary to the item "Structural Steel in Plate Girder Spans (M 270, Gr. ___)".

All girders in continuous units and simple spans with field splices shall be assembled in the shop as specified in Subsection 807.54(b)(2) and blocked in their true position with webs horizontal. The camber, length of sections, distance between bearings, and openings of joints shall be measured and this information shall become part of the permanent records. The component parts shall be match marked in this assembly and these marks shall be shown on the erection diagram.

All girders in simple spans without field splices shall be blocked in their true position with webs horizontal. The camber, distance between bearings, and openings of joints shall be measured and this information shall become part of the permanent records.

Web and flange plates for main members and flange splice plates for main members shall be cut and fabricated so that the primary direction of rolling is parallel to the direction of the main tensile and/or compressive stresses.

Girder webs may be made by shop splicing with minimum lengths of 25 feet for sections. Flange plates longer than 50 feet may be made by shop splicing with minimum lengths of 25 feet for sections. No additional payment will be made for shop welded splices.

All girder dimensions are based on a temperature of 60 degrees F. A tolerance of ¼" +/- is allowed for camber.

Groove welds in web and flange plates shall be Quality Control (Q.C.) tested by nondestructive testing, as required in Subsection 807.23(b). Fillet welds at flange to web plate connections shall be Q.C. tested by the magnetic particle method. All Q.C. testing shall be considered subsidiary to the item "Structural Steel in Plate Girder Spans (M 270, Gr. ___)".

Bent plate diaphragms for horizontally curved girders shall be cut and fabricated so that the primary direction of rolling is parallel to the direction of the main tensile and/or compressive stresses. Bent plate diaphragms for straight girders may be cut and fabricated in accordance with Subsection 807.35 or as required for horizontally curved girders.

Unless otherwise noted, cross-frames and diaphragms shall be installed as girders are erected. All bolts in cross-frames, diaphragms, and field splices shall be installed and tightened in accordance with Subsection 807.71 prior to pouring the concrete deck.

SUBSTRUCTURE NOTES:

CONCRETE:

Unless otherwise noted, concrete in caps, columns and footings (except seal footings) shall be Class "S" with a minimum 28 day compressive strength f'c = 3,500 psi and shall be poured in the dry. Seal Concrete for footings shall have a minimum 28 day compressive strength f'c = 2,100 psi.

Concrete in drilled shafts shall be Class "S" as modified by Job SP "Drilled Shaft Foundations".

All exposed corners shall be chamfered ¾" unless otherwise noted.

REINFORCING STEEL:

All reinforcing steel shall be Grade 60 (yield strength = 60,000 psi) conforming to AASHTO M 31 or M 322, Type A, with mill test reports.

Top reinforcing bars in cap shall be properly placed to avoid interference with anchor bolts or sheet metal sleeves.

STRUCTURAL STEEL:

Structural steel in end bents shall be AASHTO M 270 with grade and payment as specified in the plans.

FOR ADDITIONAL INFORMATION AND NOTES, SEE LAYOUT(S) AND PLAN DETAILS.

FOR ADDITIONAL INFORMATION AND NOTES, SEE LAYOUT(S) AND PLAN DETAILS.

STANDARD GENERAL NOTES
FOR STEEL BRIDGE STRUCTURES

ARKANSAS STATE HIGHWAY COMMISSION
LITTLE ROCK, ARK.

DRAWN BY: A.M.S. DATE: 9-2-2015 FILENAME: b55006.dgn
CHECKED BY: B.E.F. DATE: 9-2-2015 SCALE: NO SCALE
DESIGNED BY: STD. DATE:

DRAWING NO. 55006

PRINT DATE: 11/7/2019

DATE REVISED	DATE FILMED	DATE REVISED	DATE FILMED	FED. ROAD DIST. NO.	STATE	FED. AID PROJ. NO.	SHEET NO.	TOTAL SHEETS
				6	ARK.			
				JOB NO.				
				①	STEEL BRIDGE STRUCTURES 55007			

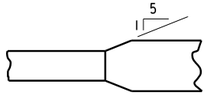

Plan-Unequal Width (Flg.)

FLANGE SPLICE

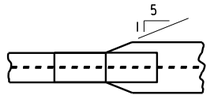

FLANGE SPLICE AT UNEQUAL BOTTOM FLANGE WIDTHS

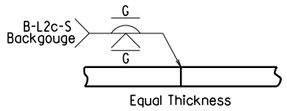

Equal Thickness

WEB & FLANGE SPLICE

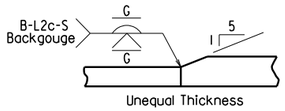

Unequal Thickness

FLANGE SPLICE

(Use when Base Metal Thickness is Equal to or Less than 2")

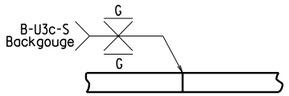

Equal Thickness

WEB & FLANGE SPLICE

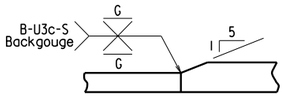

Unequal Thickness

FLANGE SPLICE

(Use when Base Metal Thickness is Greater than 2")

DETAILS OF WELDED SPLICES FOR PLATE GIRDERS

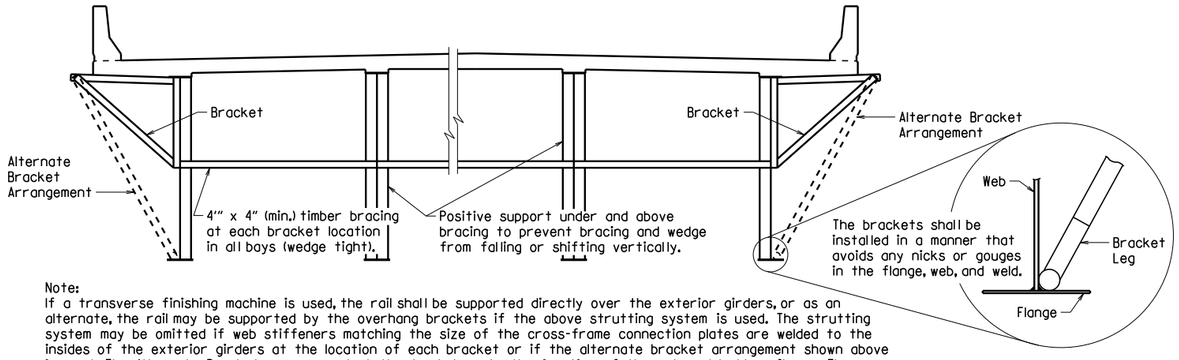

Note:
If a transverse finishing machine is used, the rail shall be supported directly over the exterior girders, or as an alternate, the rail may be supported by the overhang brackets if the above strutting system is used. The strutting system may be omitted if web stiffeners matching the size of the cross-frame connection plates are welded to the insides of the exterior girders at the location of each bracket or if the alternate bracket arrangement shown above is used. The Alternate Bracket arrangement shall extend down to the junction of the web and bottom flange. The stiffener shall conform to the details for cross frame connection plates shown on the plans. No direct payment will be made for brackets, timber bracing, supports, or welded stiffeners. Payment shall be subsidiary to "Structural Steel in Plate Girder Spans (___)".

SCREED RAIL SUPPORT FOR PLATE GIRDERS

(USE WHEN WEB DEPTHS ARE 48" OR GREATER)

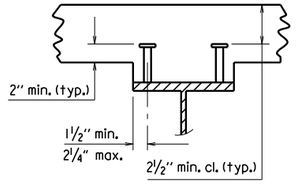

2 STUDS PER ROW

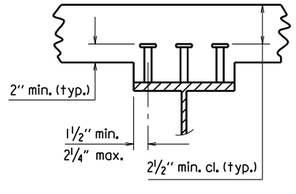

3 STUDS PER ROW

Stud Shear Connectors shall be automatically end welded to the beam or girder flange in accordance with the recommendations of the Manufacturer. See plan details for number and size.

SHEAR CONNECTOR DETAIL

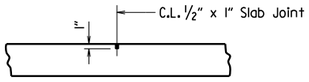

Use Type 3 or 4 Joint Sealer. See Subsections 501.02(h) and 501.05(j). Backer Rod filler will not be required. Joint Sealer shall be measured and paid for as Class S(AE) Concrete-Bridge. Slab Joints shall extend to the outside edge of the deck slab and shall align with open joints at the front face of the parapet. Slab joints shall be installed before the parapet railing is poured. If slab joints are to be sawed, they shall be sawed as soon as the concrete has sufficiently set to allow sawing of the joint without damage to the slab. Slab joints shall be placed at all pouring sequence construction joints and required slab joint locations. The joint sealer shall extend across the deck from gutterline to gutterline.

ADDITIONAL NOTES IF SIDEWALKS OR RAISED MEDIANS ARE REQUIRED:
Slab Joints shall be installed before the sidewalk or raised median is poured. After installation of the joint in the sidewalk or raised median and prior to pouring the parapet rail, the joint sealer shall be placed extending across the deck slab from gutterline to gutterline and acrosss the top of the sidwalk or raised median to the edge of the slab. No joint sealer shall be placed on the deck slab under the sidewalk or raised median.

TRANSVERSE SLAB JOINT DETAIL

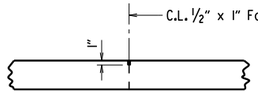

Use ½" x 1" Type 3 or 4 Joint Sealer. See Subsections 501.02(h) and 501.05(j). Backer Rod filler will not be required. Joint sealer shall be measured and paid for as Class S(AE) Concrete-Bridge. This joint shall be formed. Seal color shall be gray or other color similar to concrete.

LONGITUDINAL CONSTRUCTION JOINT

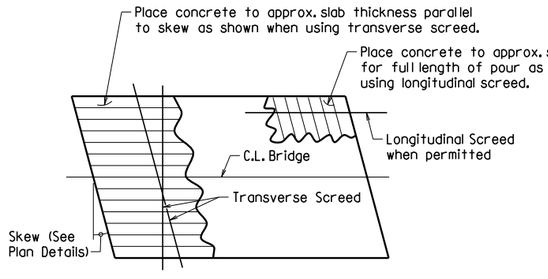

Note: At the Contractor's option, the transverse screed may be placed parallel to the skew or perpendicular to C. L. Bridge.

CONCRETE PLACEMENT PROCEDURE FOR BRIDGES WITH SKEW

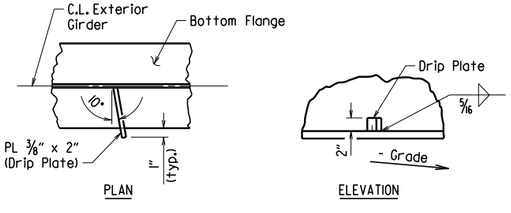

PLAN

ELEVATION

Drip Plate to be welded to the outer side of the bottom flange of the exterior girders.

Locate drip plate 5'-0" from C.L. Bearing on high side of each Bent, unless otherwise noted in the plans.

BOTTOM FLANGE DRIP PLATE

(USE WHEN WEB DEPTHS ARE 54" OR GREATER AND UNIT OR SPAN IS NOT IN LEVEL GRADE)

t_s = slab thickness. See "Typical Roadway Section" in the plans.

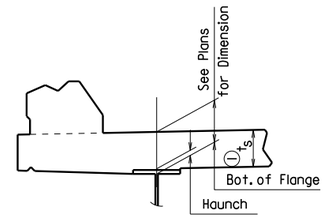

EXTERIOR BEAM OR GIRDER

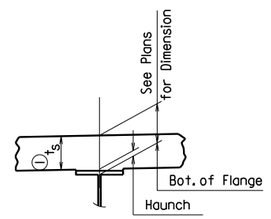

INTERIOR BEAM OR GIRDER

① Tolerance when removable deck forming is used is + ½", - ¼". Haunch forming is required and shall be adjusted to maintain slab thickness tolerance.

NOTES:
Haunch dimension may vary within the following limits to maintain the grade and slab thickness tolerance: Minimum occurs when top flange contacts bottom reinforcing steel; Maximum = top flange thickness plus 1¾" unless otherwise noted in the plans. No increase in concrete and structural steel quantities will be made to maintain tolerances.

Tolerances shown are applicable only when removable deck forming is used. See Std. Dwg. No. 55005 for tolerances when permanent steel deck forms are used. Payment for concrete shall be based on removable deck forming.

ADJUSTMENT FOR SLAB THICKNESS TOLERANCE

NOTE: Working Point matches Theoretical Roadway Grade.

ROUNDING DETAIL

BRIDGES IN NORMAL CROWN

WELD TABLE

Material Thickness of Thicker Part Joined (Inches)	Minimum Size of Fillet Weld (Inches)	Single Pass Weld Must Be Used
To ¾" Inclusive	¼"	
Over ¾"	⅝"	

NOTE: When a fillet weld size, as shown on the plans, is larger than the minimum, the first pass shall be that specified for minimum size of fillet weld.

SECTION AND SUBSECTION REFER TO THE ARKANSAS STATE HIGHWAY AND TRANSPORTATION DEPARTMENT STANDARD SPECIFICATIONS FOR HIGHWAY CONSTRUCTION (2014 EDITION).

THESE DETAILS ARE APPLICABLE UNLESS OTHERWISE SHOWN IN THE PLAN DETAILS, SPECIAL PROVISIONS, OR SUPPLEMENTAL SPECIFICATIONS.

STANDARD DETAILS FOR STEEL BRIDGE STRUCTURES

ARKANSAS STATE HIGHWAY COMMISSION

LITTLE ROCK, ARK.

DRAWN BY: JYP DATE: 2/11/2016 FILENAME: b55007.dgn

CHECKED BY: AMS DATE: 2/11/2016 SCALE: No Scale

DESIGNED BY: STD. DATE: —

DRAWING NO. 55007

DATE REVISED	DATE FILMED	DATE REVISED	DATE FILMED	FED. ROAD DIST. NO.	STATE	FED. AID PROJ. NO.	SHEET NO.	TOTAL SHEETS
				6	ARK.			
				JOB NO.				
				①	POURED SILICONE JOINT			55008

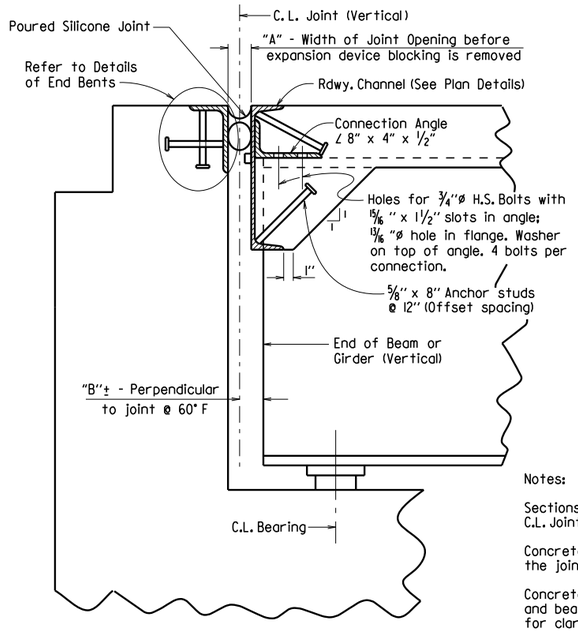

SECTION THRU JOINT AT END BENT

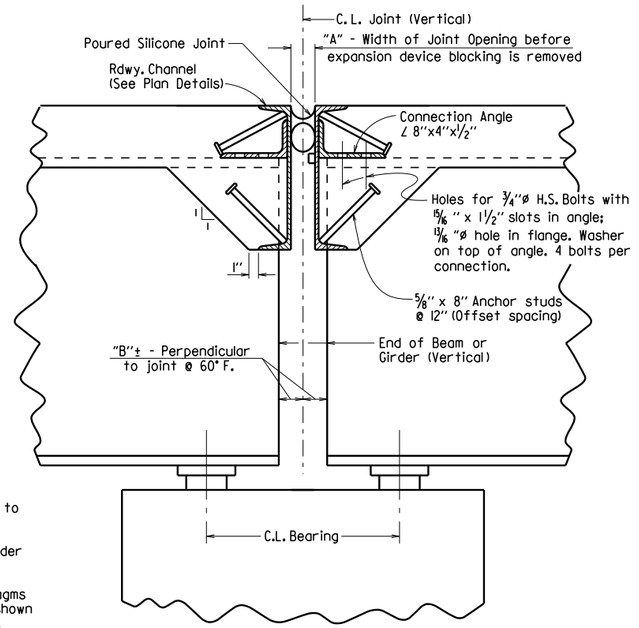

SECTION THRU JOINT AT INTERMEDIATE BENT

Notes:

Sections are taken perpendicular to C.L. Joint.

Concrete shall be hand packed under the joint armor.

Concrete diaphragms, steel diaphragms and bearing stiffeners are not shown for clarity. See plans for details.

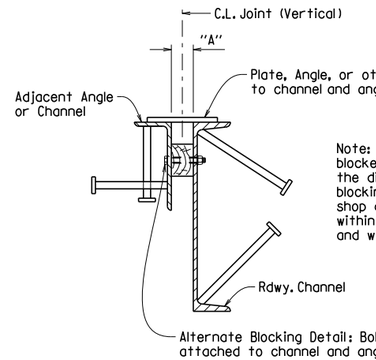

Note: Each expansion joint device shall be blocked in the Shop by the Fabricator to the dimension "A" shown for 60° F and the blocking details shall be shown on the shop drawings. Blocking shall be placed within 2 feet of each end of the device and with a maximum spacing of 8 feet.

DETAILS FOR BLOCKING EXPANSION JOINT DEVICE

EXPANSION DEVICE INSTALLATION AT END BENTS:

The Contractor may elect to install the expansion device using one of the following two alternatives:

1) The concrete span pour adjacent to joint shall be placed before the end bent backwall is placed. After the end bent backwall forms are in place and the beams or girders erected, the blocked expansion device shall be installed and adjusted for grade. All connection bolts shall be fully tightened prior to placing the deck concrete adjacent to the bent. Immediately prior to pouring the backwall concrete, the blocking shall be removed, and the opening adjusted for temperature and grade.

2) The backwall shall be poured to the optional construction joint after beams or girders are erected. The blocked expansion device shall be installed and adjusted for grade. All connection bolts shall be fully tightened prior to placing the deck concrete adjacent to the bent. Immediately prior to pouring the remainder of the backwall concrete, the blocking shall be removed and the opening adjusted for temperature and grade.

EXPANSION DEVICE INSTALLATION AT INTERMEDIATE BENTS:

After all beams or girders on each side of the joint are erected the blocked expansion device shall be installed and adjusted for grade. Deck concrete shall be placed for the entire unit or span on one side of the joint before deck concrete on the other side is placed. Connection bolts for the first side to have deck concrete placed shall be completely bolted. Bolts on the other side shall be loosely installed so that thermal and rotational movements will not be restricted during concrete placement on the first side.

Connection bolts on the second side shall remain loose until the concrete pour adjacent to the joint is to be placed. Immediately prior to pouring the span concrete on the second side, the blocking shall be removed, the joint adjusted for temperature and grade, and the connection bolts tightened.

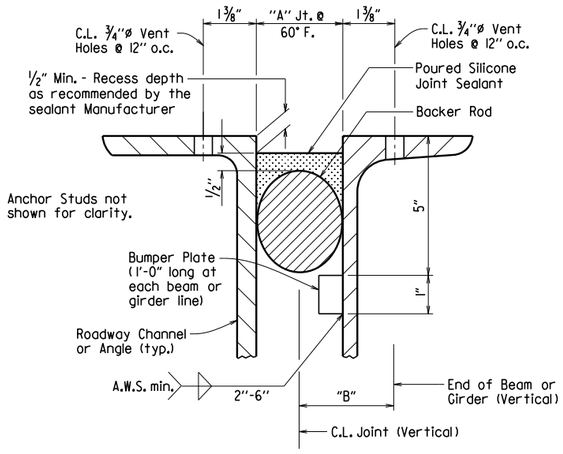

DETAIL OF POURED SILICONE JOINT

Silicone joint material and installation shall conform to Section 809. The temperature limitations recommended by the sealant Manufacturer shall be observed. The sealant shall be installed only when the average 24 hour air temperature is between 40° and 80° F.

Use an appropriately sized backer rod at the depth shown in the Manufacturer's literature based on the joint width at the time of sealing. Unless otherwise noted, do not install more backer rod than can be sealed in the same day.

The Contractor shall verify separation of the backer rod from the joint material after the joint material has set.

When bridge deck is constructed in stages, backer rods shall be extended beyond length of poured joint in initial construction stage so that the two pieces can be properly spliced together prior to installing sealant in subsequent stages. Manufacturer's recommendations shall be followed to prevent sealant from "running out of joint" during stage construction.

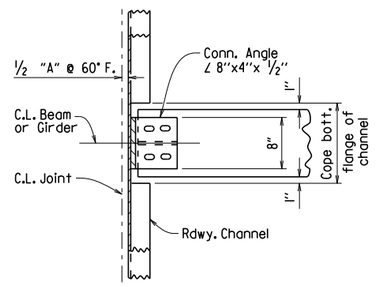

CHANNEL CONNECTION DETAIL

BENTS WITHOUT SKEW

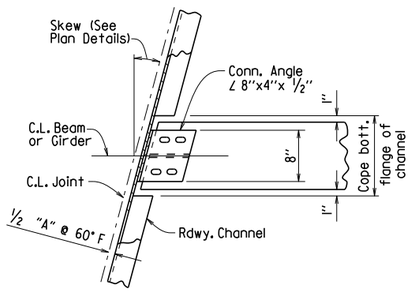

CHANNEL CONNECTION DETAIL

BENTS WITH SKEW

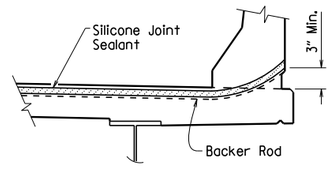

JOINT SEAL PLACEMENT AT RAIL

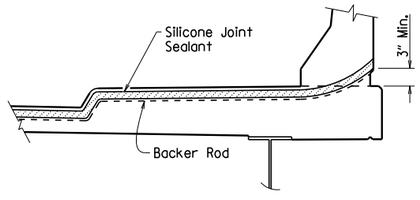

JOINT SEAL PLACEMENT AT SIDEWALK

SECTION AND SUBSECTION REFER TO THE ARKANSAS STATE HIGHWAY AND TRANSPORTATION DEPARTMENT STANDARD SPECIFICATIONS FOR HIGHWAY CONSTRUCTION (2014 EDITION).

THESE DETAILS ARE APPLICABLE UNLESS OTHERWISE SHOWN IN THE PLAN DETAILS, SPECIAL PROVISIONS, OR SUPPLEMENTAL SPECIFICATIONS. SEE "TABLE OF SILICONE JOINT DATA" IN PLAN DETAILS FOR VARIABLES "A" AND "B", AND BUMPER PLATE SIZE.

STANDARD DETAILS FOR POURED SILICONE JOINTS

ARKANSAS STATE HIGHWAY COMMISSION

LITTLE ROCK, ARK.

DRAWN BY: A.C.P. DATE: 2/11/2016 FILENAME: b55008.dgn

CHECKED BY: A.M.S. DATE: 2/11/2016 SCALE: No Scale

DESIGNED BY: STD. DATE: —

DRAWING NO. 55008

DATE REVISED	DATE REVISED	FED. RD. DIST. NO.	STATE	JOB NO.	SHEET NO.	TOTAL SHEETS
4-14-23		6	ARK.			
		TYPE D NAME PLATE - 55010				

The name of the bridge as shown on the plans shall be placed on Lines 1 & 2 using ⅛" raised letters and numerals ⅜" high.

	Example 1	Example 2	Example 3	Example 4
Line 1	RED RIVER	SOUTHERN RAILROAD	SALINE RIVER	HIGHWAY 5
Line 2	RELIEF	OVERPASS	RELIEF	

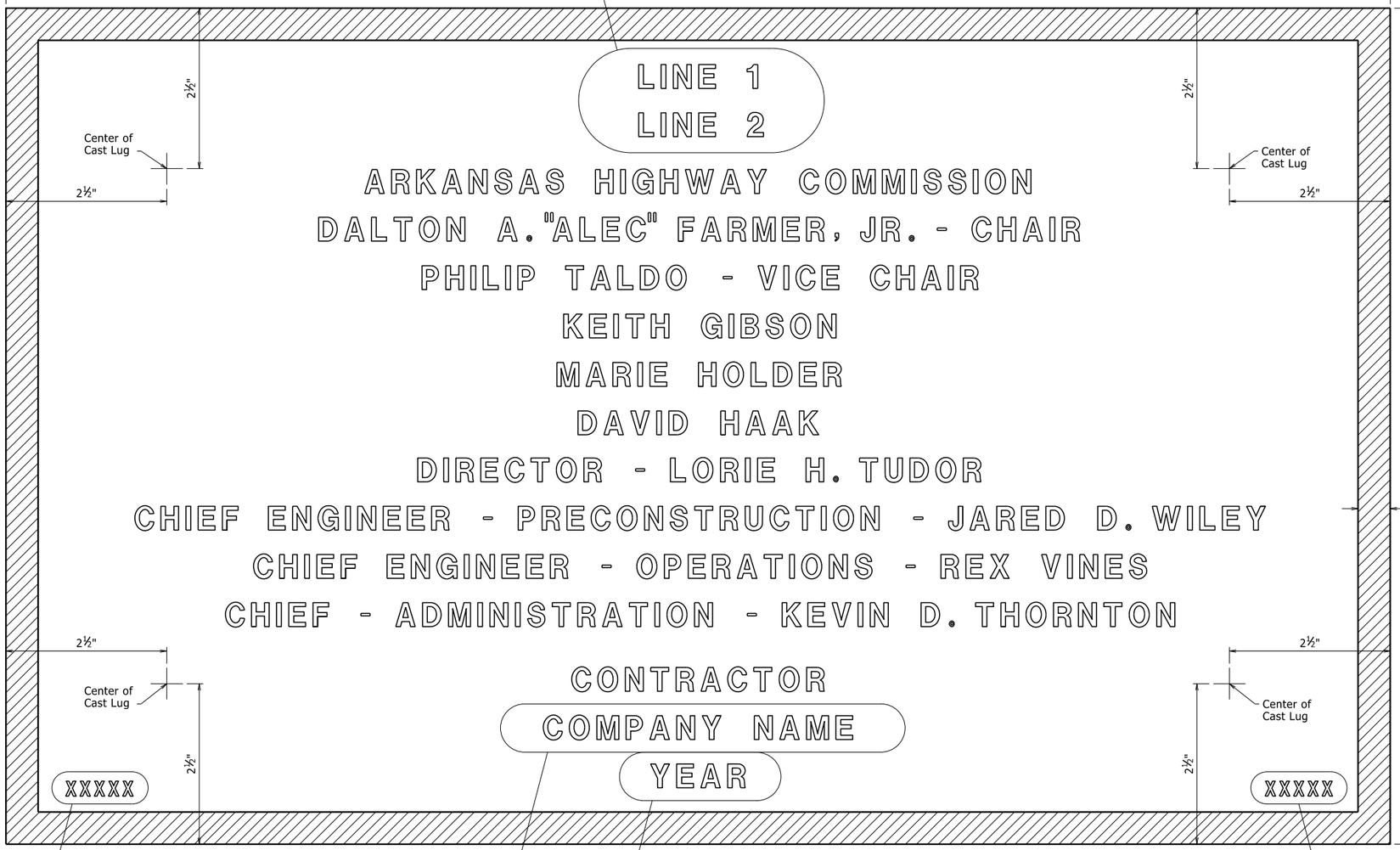

Place the design live loading here using ⅛" raised letters and numerals ¼" high. Examples: HS20, HL-93

Place the Year in which Contract was awarded here using ⅛" raised numerals ⅜" high. Example: 2001

Place the name of the company awarded the construction contract here using ⅛" raised letters and numerals ⅜" high. Example: ABCD CONSTRUCTION, INC.

Place the Bridge number here using ⅛" raised letters and numerals ¼" high. Examples: A1234, 05432

TYPICAL BRIDGE NAME PLATE

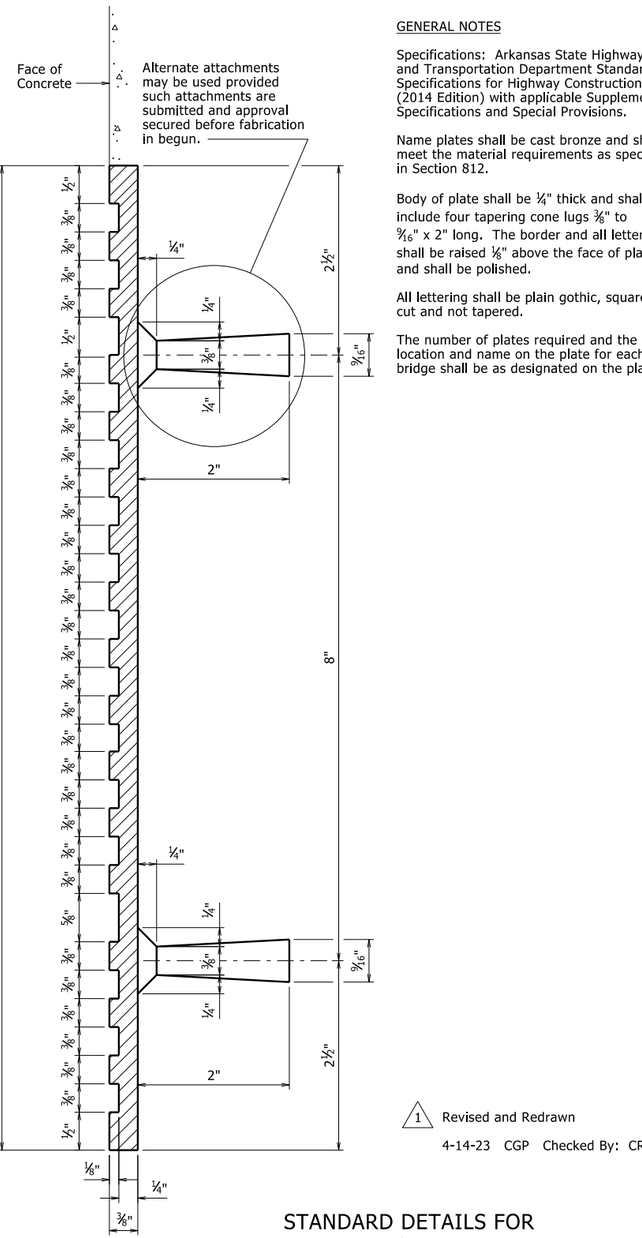

GENERAL NOTES

Specifications: Arkansas State Highway and Transportation Department Standard Specifications for Highway Construction, (2014 Edition) with applicable Supplemental Specifications and Special Provisions.

Name plates shall be cast bronze and shall meet the material requirements as specified in Section 812.

Body of plate shall be ¼" thick and shall include four tapering cone lugs ⅜" to 9/16" x 2" long. The border and all lettering shall be raised ⅛" above the face of plate and shall be polished.

All lettering shall be plain gothic, square cut and not tapered.

The number of plates required and the location and name on the plate for each bridge shall be as designated on the plans.

1 Revised and Redrawn
4-14-23 CGP Checked By: CRE

STANDARD DETAILS FOR
TYPE D BRIDGE NAME PLATE

ROUTE SEC.

ARKANSAS STATE HIGHWAY COMMISSION
LITTLE ROCK, ARK.

DRAWN BY: KDH DATE: 2-27-2014 FILENAME: b55010.dgn
CHECKED BY: BEF DATE: 2-27-2014 SCALE: NO SCALE
DESIGNED BY: STD. DATE:

DRAWING NO. 55010

PRINT DATE: 4/20/2023

DATE REVISED	DATE FILMED	DATE REVISED	DATE FILMED	FED. ROAD DIST. NO.	STATE	FED. AID PROJ. NO.	SHEET NO.	TOTAL SHEETS
				6	ARK.			
				JOB NO.				

① Type F Approach Gutters - 55030F

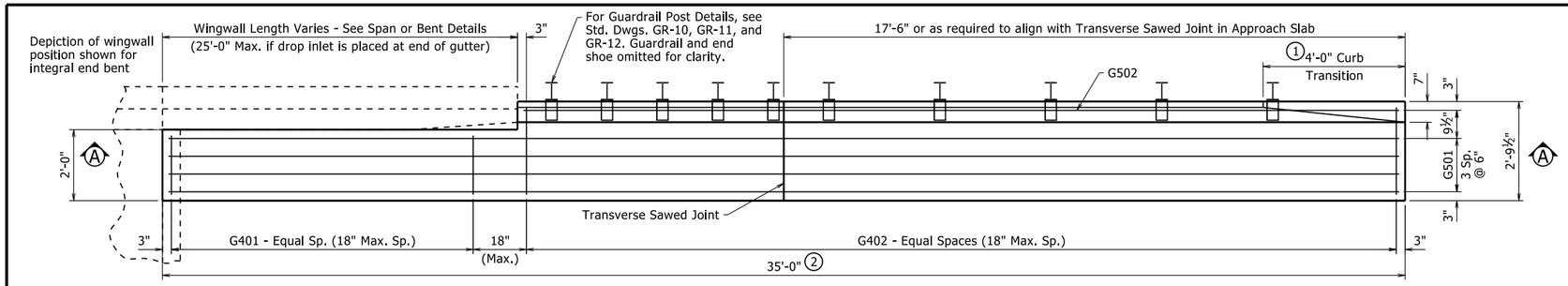

HALF PLAN OF APPROACH GUTTERS FOR SQUARE END BENT

½" = 1'-0"

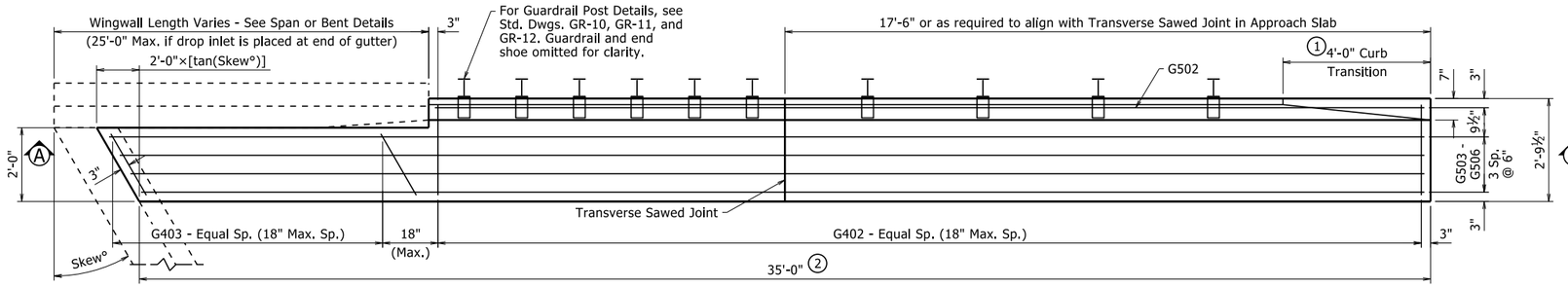

Depiction of wingwall position shown for end bent with expansion joint

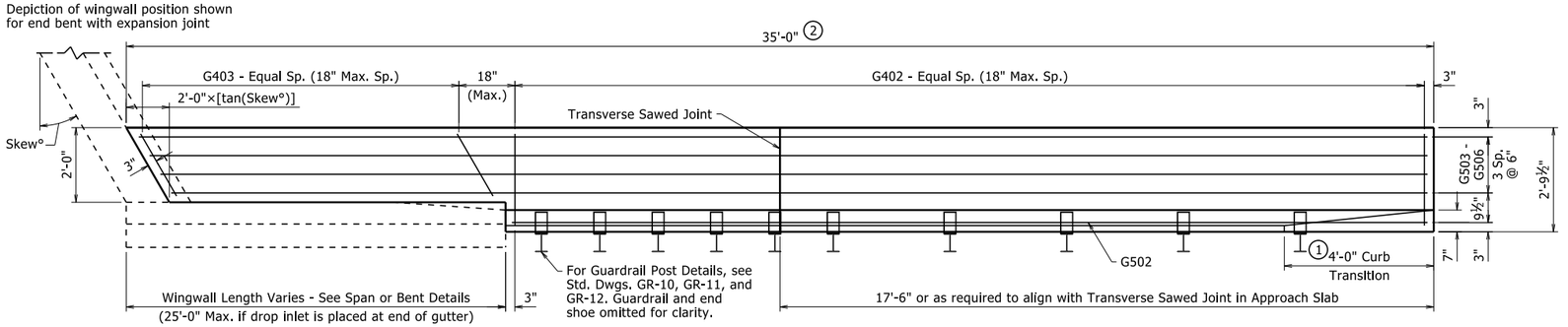

PLAN OF SKEWED APPROACH GUTTERS FOR SKEWED END BENT

½" = 1'-0"

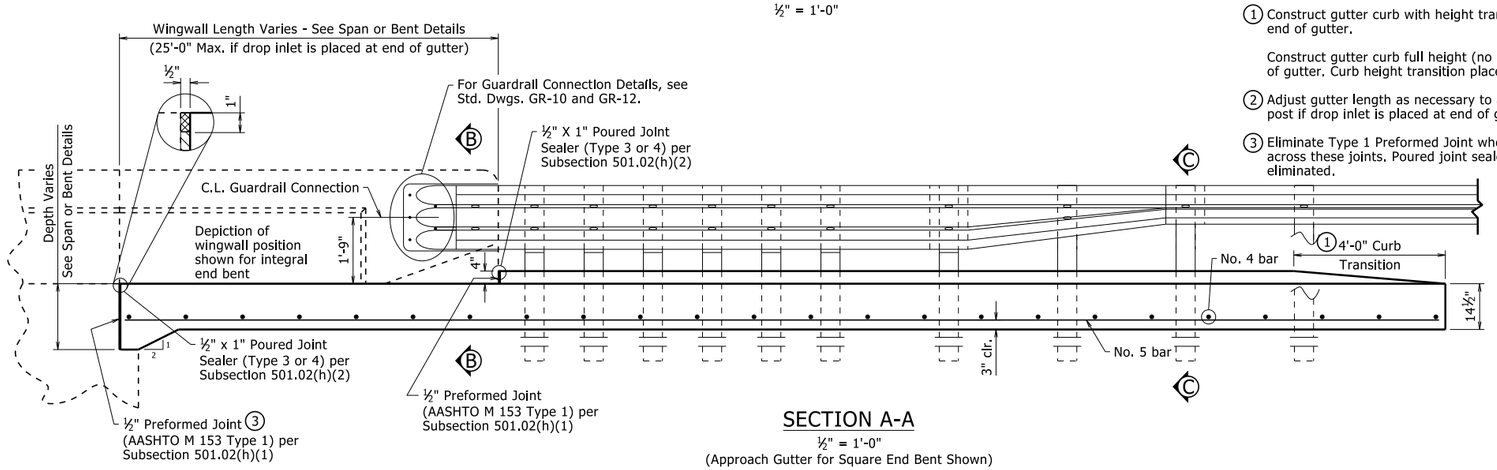

SECTION A-A

½" = 1'-0"

(Approach Gutter for Square End Bent Shown)

QUANTITIES FOR ONE APPROACH GUTTER

(For Information Only)

Reinforcing Steel (Lbs.)	Concrete (Cu. Yds.)
210	4.20

Quantities are based on one gutter for a square, integral end bent and a wingwall length of 10'-0"

BAR LIST FOR ONE APPROACH GUTTER

	Mark	No. Req'd.	Length
Square End Bent	G401	④	1'-8"
	G402	④	2'-5½"
	G501	4	34'-8"
	G502	1	④
Skewed End Bent	G402	④	2'-5½"
	G403	④	④
	G502	1	④
	G503 - G506	1 ea.	④

④ Varies with Skew and/or Wingwall Length

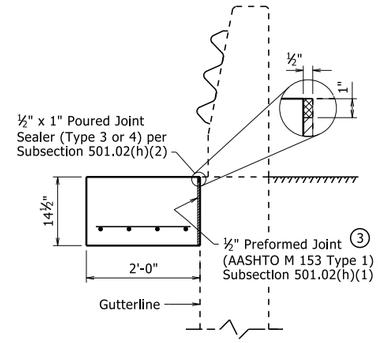

SECTION B-B

¾" = 1'-0"

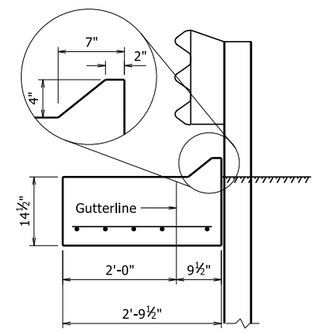

SECTION C-C

¾" = 1'-0"

① Construct gutter curb with height transition as shown if drop inlet is not placed at end of gutter.

Construct gutter curb full height (no height transition) if drop inlet is placed at end of gutter. Curb height transition placed on drop inlet.

② Adjust gutter length as necessary to avoid outlet pipe interference with guardrail post if drop inlet is placed at end of gutter.

③ Eliminate Type 1 Preformed Joint when bridge details show reinforcing dowels across these joints. Poured joint sealer is required, however, backer rod shall be eliminated.

GENERAL NOTES

All concrete shall be Class S(AE) with a minimum 28 day compressive strength f'c = 4,000 psi and shall be poured in the dry.

All reinforcing steel shall be Grade 60 (yield strength = 60,000 psi) conforming to AASHTO M 31 or M 322, Type A, with mill test reports.

Approach Gutters will be measured and paid for in accordance with Section 504.

All longitudinal lines within the limits of horizontal curves shall be on curves concentric to C.L. Bridge. Adjustment to longitudinal bar lengths may be required. Transverse reinforcing shall be placed on radial lines to C.L. Bridge.

Scales shown are for 22"x34" drawings. When using 11"x17" drawings, reduce scale by one half.

STANDARD DETAILS FOR TYPE F APPROACH GUTTERS

ARKANSAS STATE HIGHWAY COMMISSION

LITTLE ROCK, ARK.

DRAWN BY: NAC DATE: 4-8-2021 FILENAME: b55030f.dgn

CHECKED BY: LJB DATE: 4-8-2021 SCALE: AS NOTED

DESIGNED BY: STD DATE: -

DRAWING NO. 55030F

PRINT DATE: 9/8/2023

DATE REVISED	DATE REVISED	FED. RD. DIST. NO.	STATE	JOB NO.	SHEET NO.	TOTAL SHEETS
		6	ARK.			
		Type F Approach Slab - 55040F1				

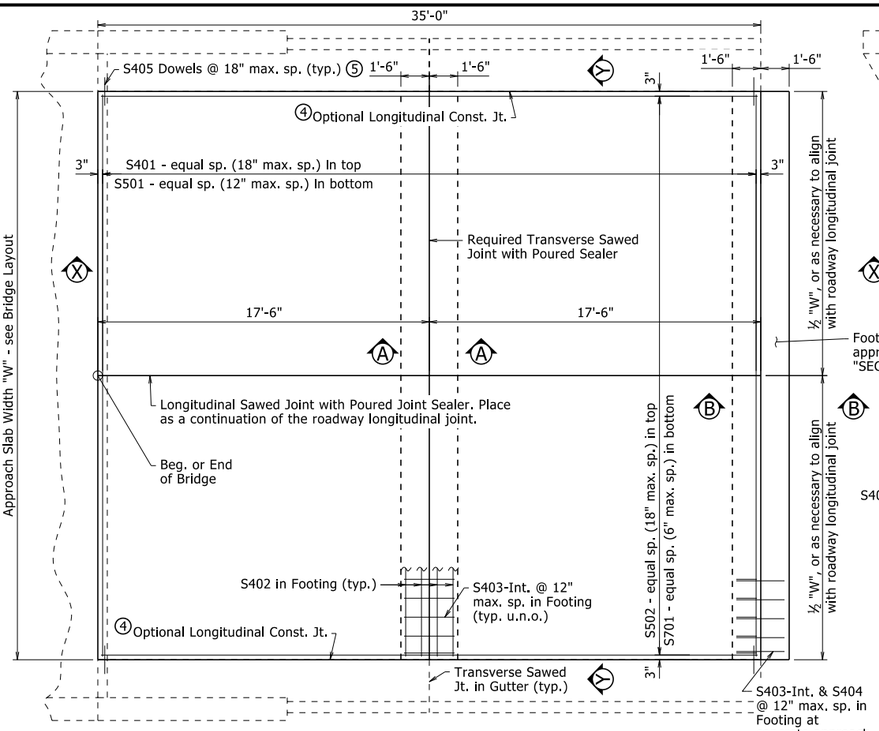

PLAN - APPROACH SLAB AT SQUARE END BENT

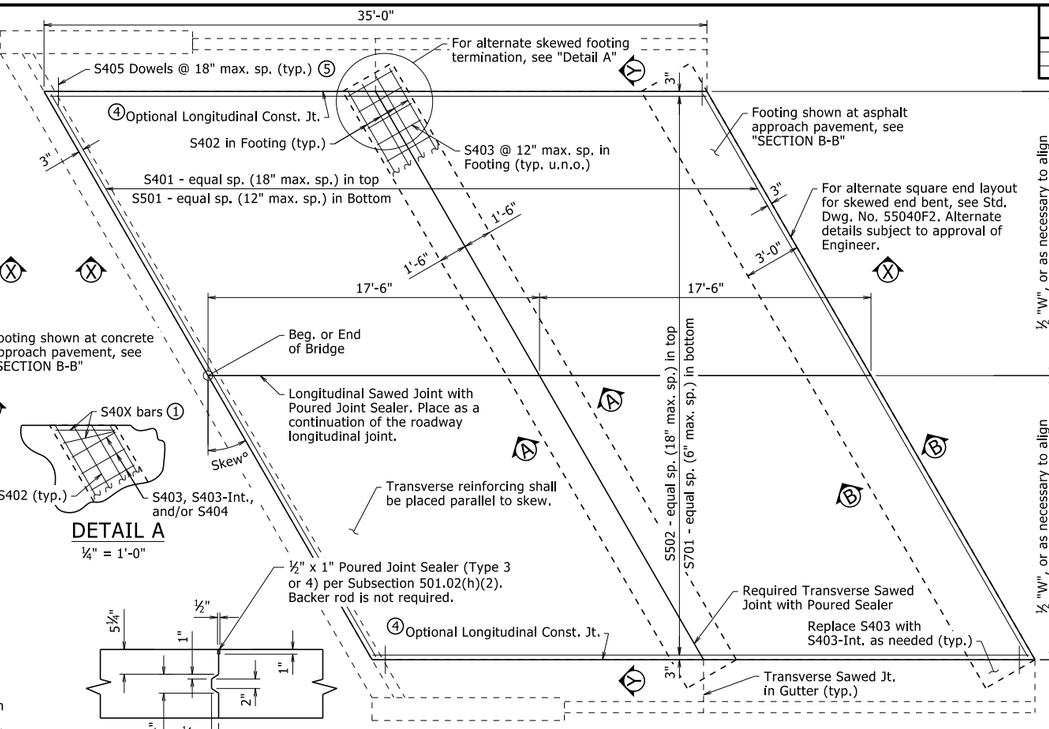

LONGITUDINAL CONSTRUCTION JOINT

½" = 1'-0"

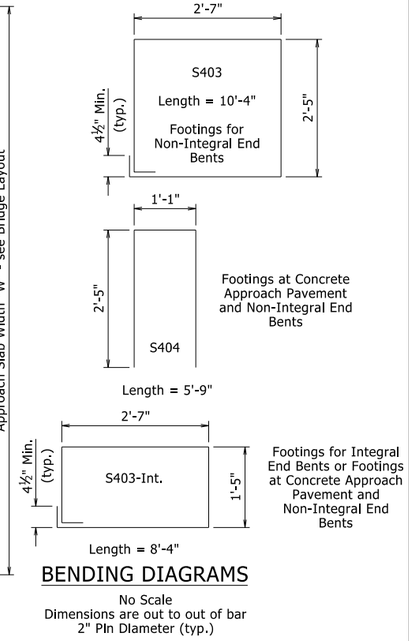

BENDING DIAGRAMS

No Scale
Dimensions are out to out of bar
2" PIn Diameter (typ.)

PLAN - APPROACH SLAB AT SKEWED END BENT

Non-Integral End Bent Shown
¼" = 1'-0"

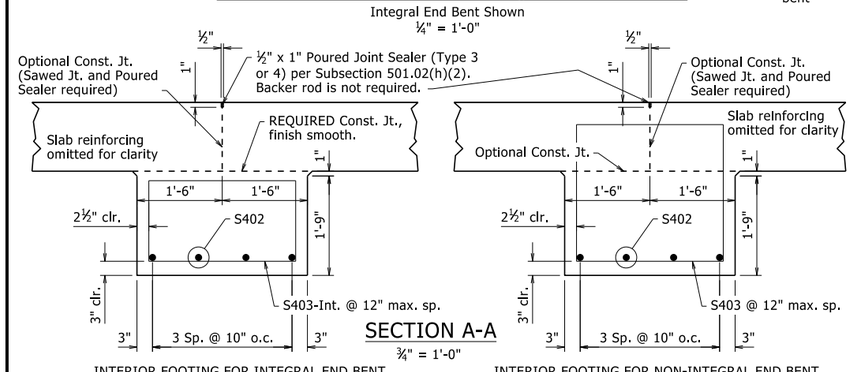

INTERIOR FOOTING FOR INTEGRAL END BENT

INTERIOR FOOTING FOR NON-INTEGRAL END BENT

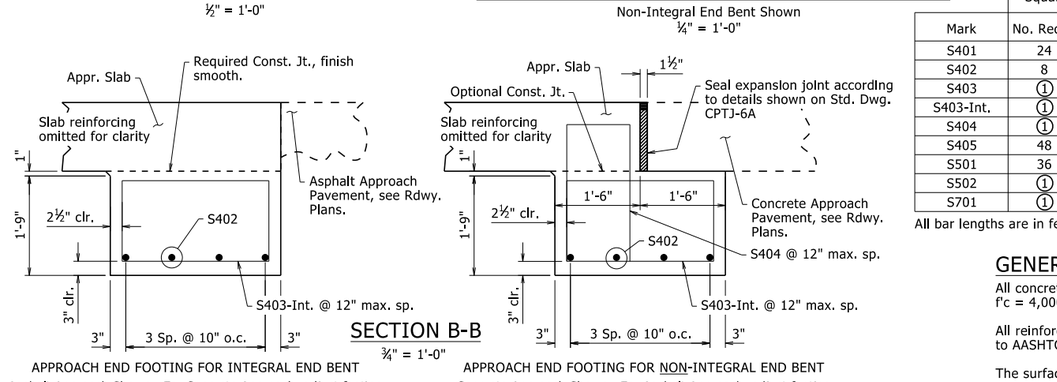

APPROACH END FOOTING FOR INTEGRAL END BENT

Asphalt Approach Shown. For Concrete Approach, adjust footing location by 1'-6" to add paving notch and include expansion joint.

APPROACH END FOOTING FOR NON-INTEGRAL END BENT

Concrete Approach Shown. For Asphalt Approach, adjust footing location by 1'-6", omit expansion joint, and replace bars S403-Int. & S404 with S403.

BAR LIST - PER APPROACH SLAB

	Square End Bent		Skewed End Bent	
Mark	No. Req'd.	Length	No. Req'd.	Length
S401	24	"W" - 0.33'	24	("W" - 0.33') / cos (Skew°)
S402	8	"W" - 0.33'	8	"W"/cos(Skew°) + 3.0'×tan(Skew°) - 0.33'
S403	①	②	①	②
S403-Int.	①	②	①	②
S404	①	②	①	②
S405	48	1'-6"	48	1'-6"
S501	36	"W" - 0.33'	36	("W" - 0.33') / cos (Skew°)
S502	①	34'-8"	①	34'-8"
S701	①	34'-8"	①	34'-8"

All bar lengths are in feet.

① Varies with Approach Slab Type, Width and/or Skew.
② See "BENDING DIAGRAMS"

GENERAL NOTES

All concrete shall be Class S(AE) with a minimum 28 day compressive strength f'c = 4,000 psi and shall be poured in the dry.

All reinforcing steel shall be Grade 60 (yield strength = 60,000 psi) conforming to AASHTO M 31 or M 322, Type A, with mill test reports.

The surface finish for Approach Slabs shall match that used on the bridge deck.

All longitudinal lines within the limits of horizontal curves shall be on curves concentric to C.L. Bridge. Adjustment to longitudinal bar lengths may be required. Transverse reinforcing shall be placed on radial lines to C.L. Bridge.

See Plans for actual Approach Slab Width, "W", end bent or span details, and approach pavement. Units of "W" are in Feet.

Approach Slabs will be measured and paid for in accordance with Section 504.

Scales shown are for full size 22"x34" drawings. When using 11"x17" drawings, reduce scale by one half.

For Table of Quantities, see "SCHEDULE OF BRIDGE QUANTITIES".

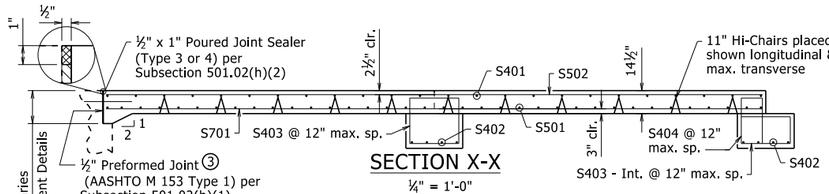

Approach Slab for Square Non-Integral End Bent at Concrete Approach Shown

MINIMUM BAR LAP LENGTH

#4	1'-8"
#5	2'-0"
#7	2'-10"

③ Eliminate Type 1 Preformed Joint when bridge details show reinforcing dowels across these joints. Poured joint sealer is required, however, backer rod shall be eliminated.

④ When construction joint is eliminated, place 1" Sawed Joint with ½" x 1" Poured Joint Sealer (Type 3 or 4) per Subsection 501.02(h)(2). Backer rod is not required.

⑤ Eliminate dowels when approach slab is adjacent to curb and gutter, or as directed by the Engineer.

The document was originally issued and sealed by Charles R. Ellis, PE No. 9235, on September 7, 2023. This copy is not a signed and sealed document.

STATE OF ARKANSAS
LICENSED PROFESSIONAL ENGINEER
No. 9235
CHARLES R. ELLIS

BRIDGE ENGINEER

STANDARD DETAILS FOR TYPE F APPROACH SLAB

ARKANSAS STATE HIGHWAY COMMISSION

LITTLE ROCK, ARK.

DRAWN BY:	CGP	DATE:	05/12/2023	FILENAME:	b55040f.dgn
CHECKED BY:	JYP	DATE:	05/15/2023	SCALE:	AS NOTED
DESIGNED BY:	STD.	DATE:	-		

DRAWING NO. 55040F1

DATE REVISED	DATE FILMED	DATE REVISED	DATE FILMED	FED. ROAD DIST. NO.	STATE	FED. AID PROJ. NO.	SHEET NO.	TOTAL SHEETS
				6	ARK.			
				JOB NO.				
				①		TEMP. BRIDGE	55050	

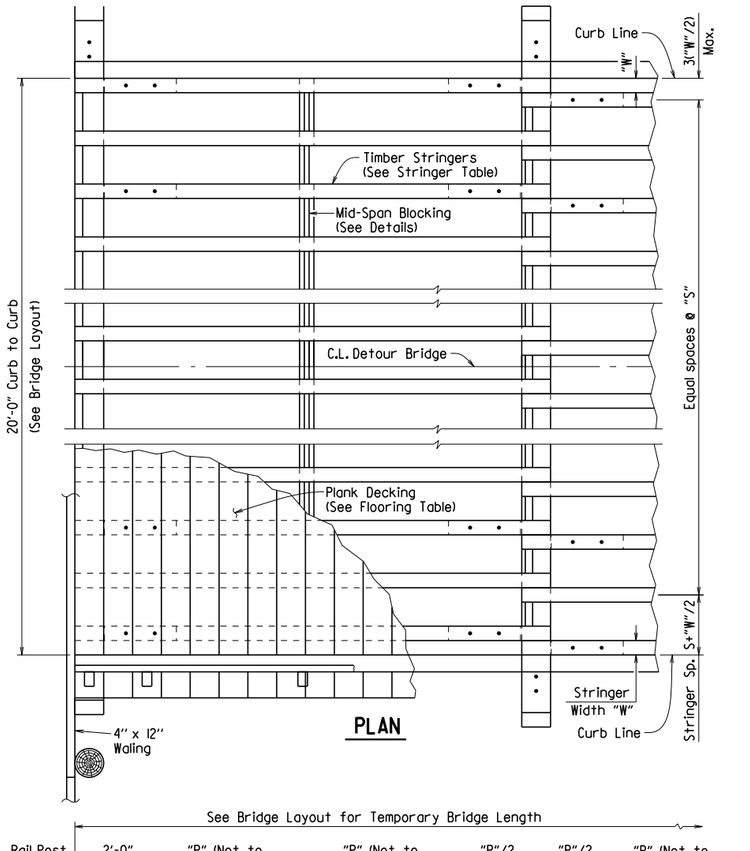

PLAN

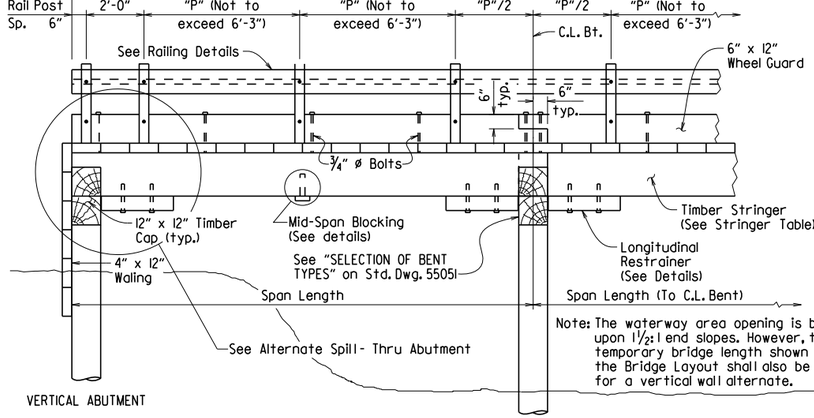

LONGITUDINAL SECTION

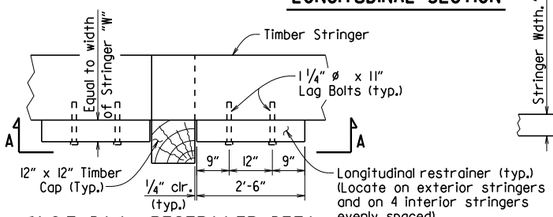

LONGITUDINAL RESTRAINER DETAIL

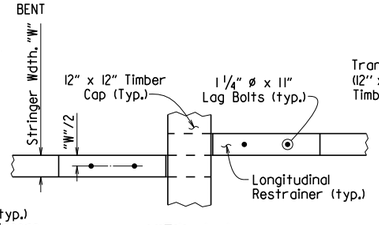

VIEW A-A

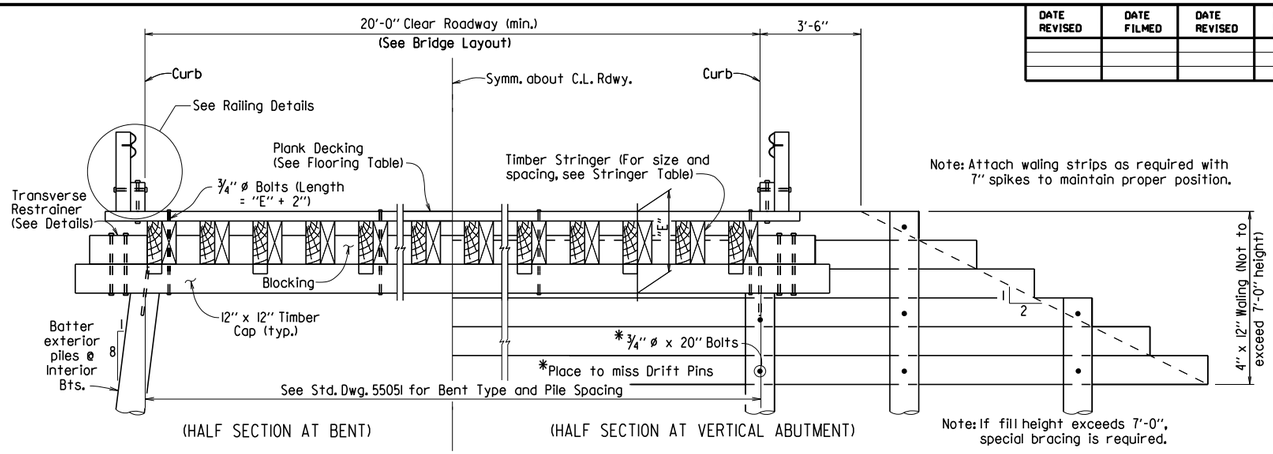

TYPICAL ROADWAY SECTION

Max. Stringer Spacing "S"	Plank Size (Nominal)
14.5"	3" X 6"
16.5"	3" X 8"
18.0"	3" X 10"
19.5"	3" X 12"
21.5"	4" X 8"
24.0"	4" X 10"
26.5"	4" X 12"

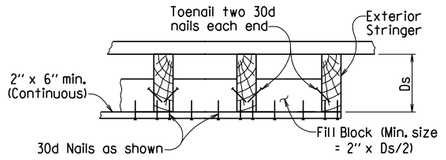

BLOCKING DETAILS AT MID-SPAN

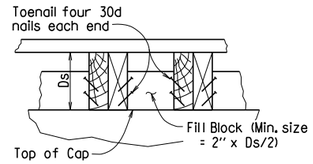

BLOCKING DETAIL AT BENTS

Note: Blocking details shown are for Bents. Details of blocking at Abutments are similar, except that depth of fill block shall be equal to Ds if Alternate Spill-Thru Abutment is used.

STRINGER SIZE (NOMINAL)	c. to c. Bearing (feet)										
4" X 12"	16										
4" X 14"	21	17	15								
6" X 12"			16								
4" X 16"	26	22	19	16							
6" X 14"			21	18	17	16	15				
6" X 16"			26	23	22	20	19	18	16		
6" X 18"			31	28	27	25	23	22	20	18	16
6" X 24"								31	31	30	27
	8.0	10.0	12.0	14.5	15.0	16.5	18.0	19.5	21.5	24.0	26.5
	MAX. STRINGER SPACING (inches)										

STRINGER & FLOORING TABLES

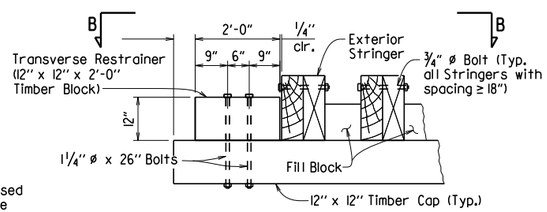

TRANSVERSE RESTRAINER DETAIL

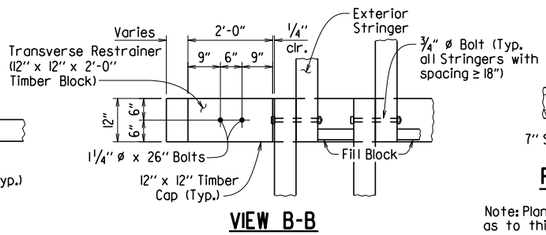

VIEW B-B

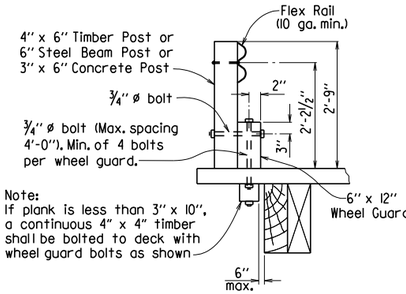

RAILING DETAILS

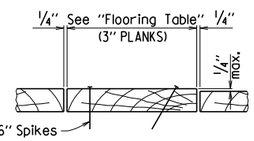

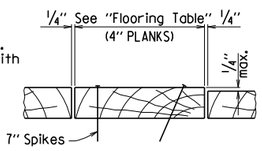

FLOOR NAILING DETAILS

Note: Planks used in plank floors shall be graded as to thickness and so laid that no two adjacent planks shall vary in thickness by more than ¼".

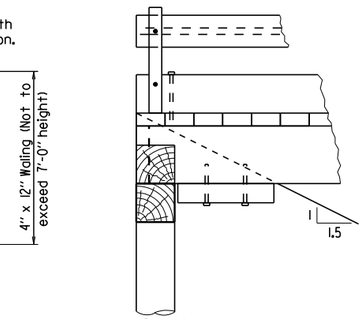

Note: Piles for Alternate Abutment to be driven after embankment is in place.

ALTERNATE SPILL-THRU ABUTMENT

GENERAL NOTES

DESIGN SPECIFICATIONS: AASHTO Standard Specifications for Highway Bridges, 2002 Edition, with current interim specifications.

CONSTRUCTION SPECIFICATIONS: Arkansas State Highway and Transportation Department Standard Specifications for Highway Construction, 2014 Edition, with applicable Special Provisions and Supplemental Specifications.

SEISMIC PERFORMANCE ZONE: 1

DESIGN LIVE LOADS: H 15-44 (No Overload). Impact was not included in the design of superstructure for timber bridges.

DESIGN DEAD LOADS: 50 lbs. per cu. ft. for lumber
150 lbs. per cu. ft. for concrete

Allowable Stress Design is used for the standard timber bridges. The allowable unit stresses used assume normal duration of loading for stress grades of sawn lumber and are as follows: fb= 1200 psi
fv= 85 psi

Concrete shall be Class S with a minimum 28 day compressive strength f'c= 3500 psi unless otherwise noted.

All reinforcing steel shall be Grade 60 (yield strength = 60,000 psi) conforming to AASHTO M31 or M322, Type A, with mill test reports.

Structural Steel shall be AASHTO M 270, Grade 36 unless otherwise noted.

Timber piling shall comply with Section 818 of the Standard Specifications and shall be driven to a minimum bearing capacity of 20 tons per pile. Steel piling shall be HP12X53 and shall be driven to a minimum bearing capacity of 44 tons per pile.

Malleable or cast iron washers to be used under all bolt heads and nuts bearing on timber. Standard washers shall be provided under all bolt heads and nuts in connnection with concrete.

Bolts shall conform to the requirements of ASTM A 307. ASTM A 307 Threaded Rods may be used in lieu of bolts. Minimum dimensions are shown for bolts, dowels, and drift pins.

Bent caps to be handled from points approximately 5' from the ends.

Timber material, regardless of species, must be of equal or better strength than no. 2 southern pine or douglas fir, graded by the standard grading rules. All timber widths and thicknesses are shown as nominal.

For additional notes concerning "Bridge End Protection System", see Std. Dwg. 55054.

Unless otherwise noted, the Temporary Bridge Structure shall comply with and be paid for in accordance with Section 603.

This document was originally issued and sealed by Carl J. Fuselier, PE No. 7510, on April 17, 2014. This copy is not a signed and sealed document.

STATE OF ARKANSAS
REGISTERED PROFESSIONAL ENGINEER
No. 7510
CARL J. FUSELIER

BRIDGE ENGINEER

SHEET 1 OF 2

STANDARD DETAILS FOR TEMPORARY BRIDGE STRUCTURE TIMBER SPANS 20' ROADWAY WIDTH

ROUTE SEC.

ARKANSAS STATE HIGHWAY COMMISSION

LITTLE ROCK, ARK.

DRAWN BY:	JYP	DATE:	4-17-14	FILENAME:	b55050.dgn
CHECKED BY:	AMS	DATE:	4-17-14	SCALE:	No Scale
DESIGNED BY:	STD.	DATE:	—		

DRAWING NO. 55050

DATE REVISED	DATE FILMED	DATE REVISED	DATE FILMED	FED. ROAD DIST. NO.	STATE	FED. AID PROJ. NO.	SHEET NO.	TOTAL SHEETS
				6	ARK.			
				JOB NO.				
				①		TEMP. BRIDGE	55051	

"S1" + "S2"	No. of Piles	Pile Spacing "A"	Overhang "B"
0 to 31'	4	3 @ 6'-0"	3'-6"
31' to 40'	5	4 @ 5'-0"	2'-6"
40' to 52'	6	5 @ 4'-0"	2'-6"
52' to 63'	7	6 @ 3'-7"	1'-9"

"S" = Span Length

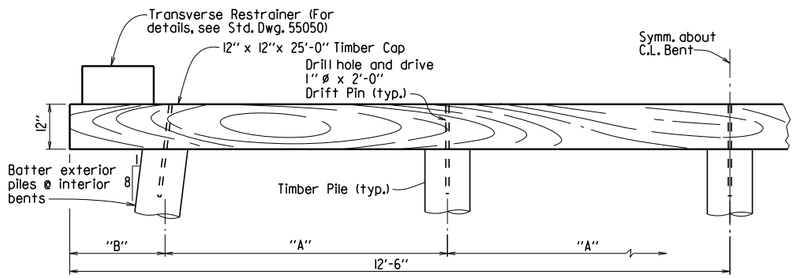

ELEVATION

TIMBER CAP & PILES

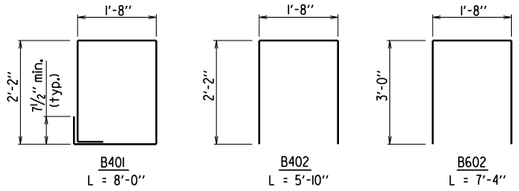

BENDING DIAGRAMS FOR POURED CAP

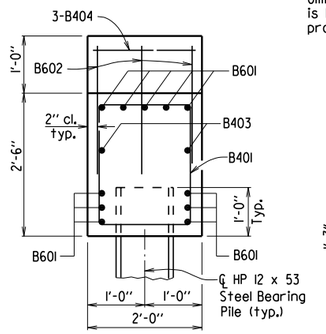

VIEW B-B

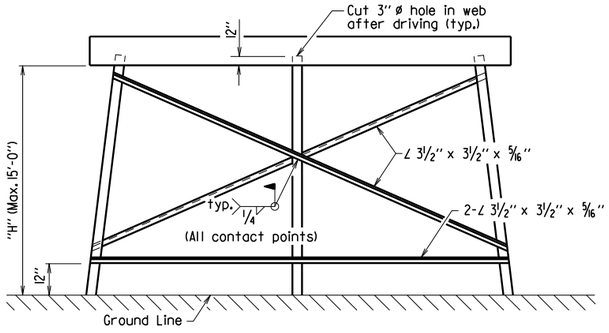

Note:
All bracing shall be cut and welded in the field. Each brace shall be furnished in one piece. Payment for any bracing required shall be considered incidental to Item 603 "Temporary Bridge Structure".

Omit bottom bracing when "H" is less than 10'. Omit all bracing when "H" is less than 5'. When "H" exceeds 15', additional X-bracing is required to provide a maximum unbraced pile length of 14'.

DETAILS OF BRACING FOR STEEL PILES

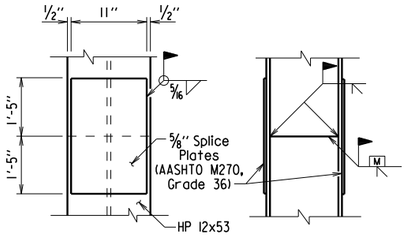

Note:
The Contractor may for his own convenience and at his own expense provide as many as three splices per pile for steel bearing piling. Minimum spacing between splices shall be 5 ft. A proprietary steel pile splicer sufficient to develop the full strength of the section may be substituted for the details shown. Pile splicers shall be installed in accordance with manufacturer's recommendations.

PILE SPLICE DETAIL

SELECTION OF BENT TYPES

These temporary bridge drawings provide the following bent types:
- Driven timber piles with timber cap.
- Driven steel HP 12x53 piles with cast in place concrete cap.
- Tower bent with driven timber piles and timber cap.
- Mud sill with timber pile columns and timber cap
- Tower bent with mud sill and timber pile columns and timber cap.

Guidelines to be used in determining the appropriate bent type are:

1) Driven piles may be used at intermediate bents if a pile penetration of at least 15' below the ground line can be obtained. At end bents, a pile penetration of at least 5' below the bottom of cap is required. Pile penetration measurements at end bents can include embankment, but fill material may not be placed around intermediate bent piles in order to meet the 15' requirement.

2) If driven timber piles are used at intermediate bents and the distance from the bottom of cap to ground line exceeds 15' at any intermediate bent, tower bents must be used at the minimum rate of one tower bent for every 160' of total bridge length. Tower bent(s), when required, shall be placed at the bent location(s) having the greatest distance from bottom of cap to ground line.

3) If piles cannot be practically driven at a bent, mud sills shall be used. All soft and yielding material shall be removed from the bearing area before placing the sill concrete.

4) Timber piles shall be used as columns in mud sills. The column spacing shall be the same as that used for driven timber pile bents for the appropriate span lengths involved.

5) If a mud sill is to be used and the distance from the bottom of cap to ground line is more than 10', a tower bent with mud sill must be used at that location.

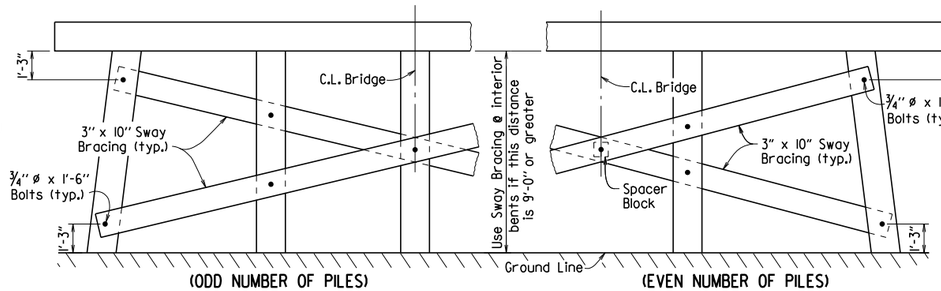

(ODD NUMBER OF PILES) (EVEN NUMBER OF PILES)

(SINGLE ROW BENT)

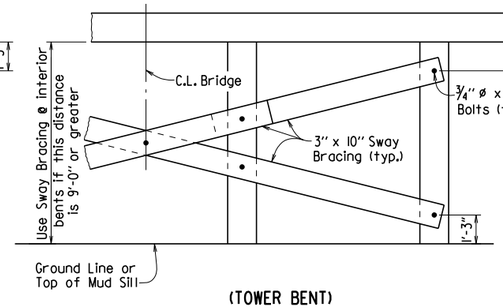

(TOWER BENT)

DETAILS OF SWAY BRACING FOR TIMBER PILES

Note: Sway Bracing, if required, shall be used on both lines of piles for Tower Bents.

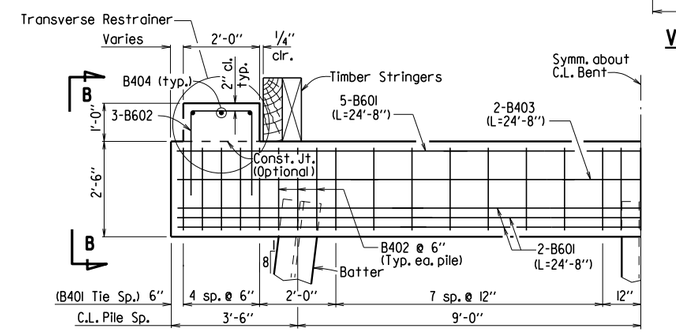

ELEVATION

CAST IN PLACE CAP & HP 12 X 53 PILES

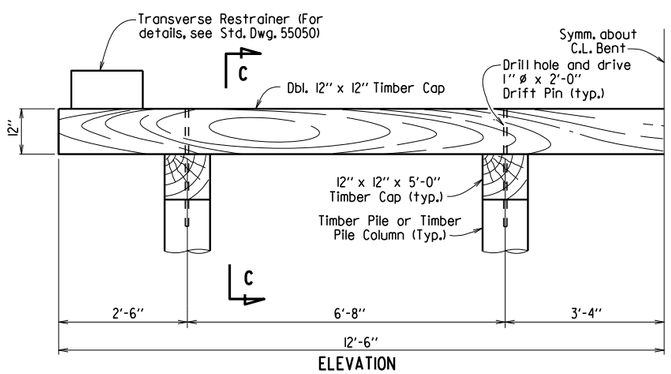

ELEVATION

TOWER BENT - TIMBER CAP & PILES

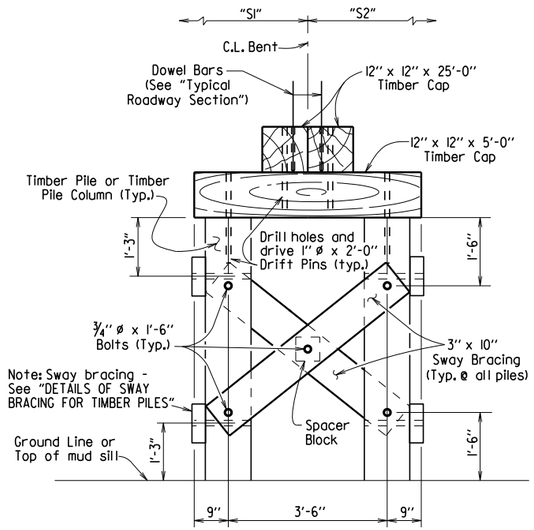

SECTION C-C

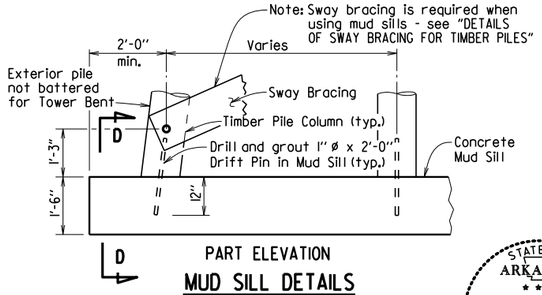

PART ELEVATION

MUD SILL DETAILS

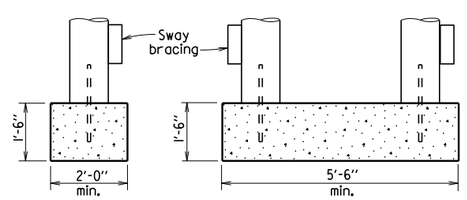

SECTION D-D

(When bottom of cap to top of mud sill is 10'-0" or less)

SECTION D-D

(When bottom of cap to top of mud sill is greater than 10'-0")

This document was originally issued and sealed by Carl J. Fuselier, PE No. 7510, on April 17, 2014. This copy is not a signed and sealed document.

STATE OF ARKANSAS
REGISTERED PROFESSIONAL ENGINEER
No. 7510
CARL J. FUSELIER

BRIDGE ENGINEER

SHEET 2 OF 2

STANDARD DETAILS FOR TEMPORARY BRIDGE STRUCTURE TIMBER SPANS 20' ROADWAY WIDTH

ROUTE SEC.

ARKANSAS STATE HIGHWAY COMMISSION

LITTLE ROCK, ARK.

DRAWN BY:	JYP	DATE:	4-17-14	FILENAME:	b55051.dgn
CHECKED BY:	AMS	DATE:	4-17-14	SCALE:	No Scale
DESIGNED BY:	STD.	DATE:	—		

DRAWING NO. 55051

DATE REVISED	DATE FILMED	DATE REVISED	DATE FILMED	FED. ROAD DIST. NO.	STATE	FED. AID PROJ. NO.	SHEET NO.	TOTAL SHEETS
				6	ARK.			
				JOB NO.				

(1) TEMP. BRIDGE 55052

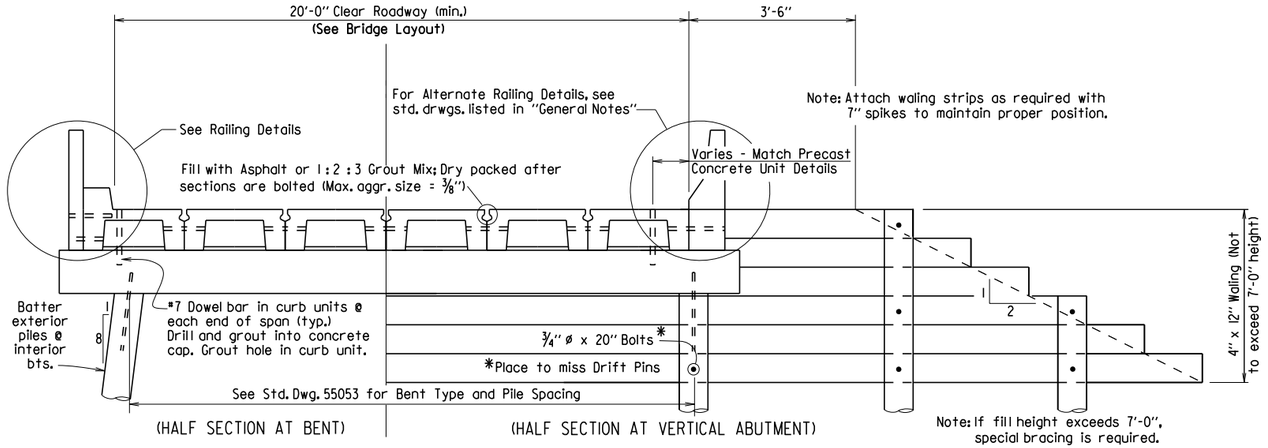

TYPICAL ROADWAY SECTION

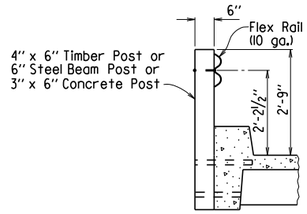

RAILING DETAILS

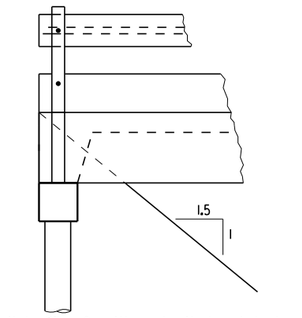

Note: Piles for Alternate Abutment to be driven after embankment is in place.

ALTERNATE SPILL-THRU ABUTMENT

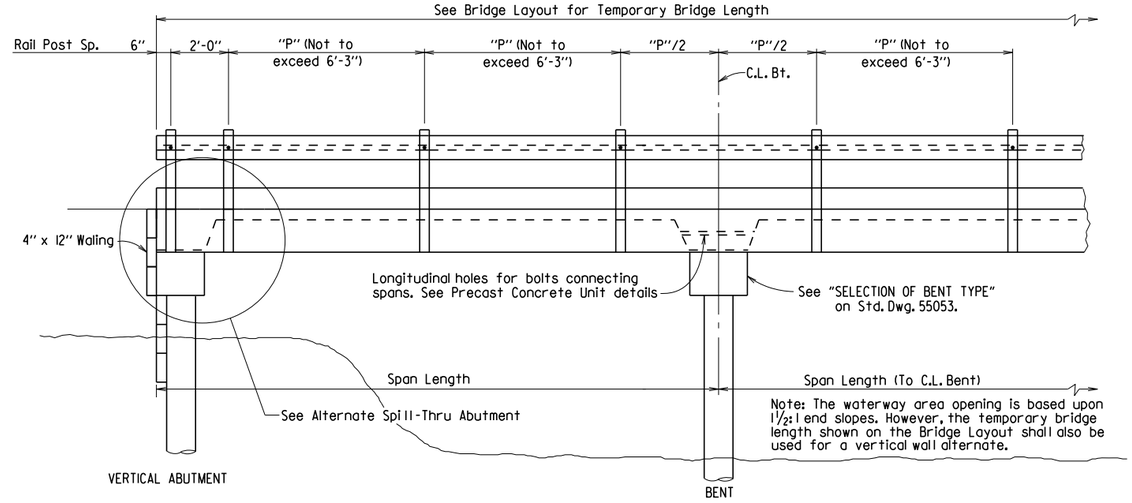

LONGITUDINAL SECTION

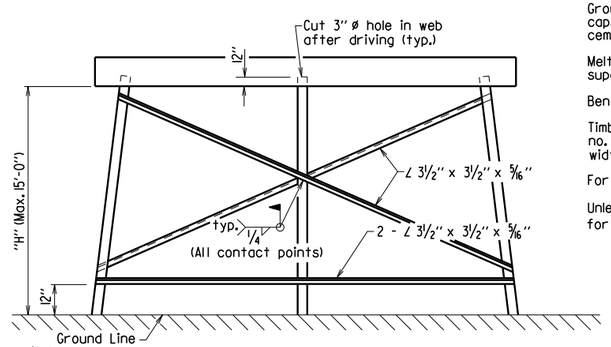

Note:
All bracing shall be cut and welded in the field. Each brace shall be furnished in one piece. Payment for any bracing required shall be considered incidental to Item 603 "Temporary Bridge Structure".

Omit bottom bracing when "H" is less than 10'. Omit all bracing when "H" is less than 5'. When "H" exceeds 15', additional X-bracing is required to provide a maximum unbraced pile length of 14'.

DETAILS OF BRACING FOR STEEL PILES

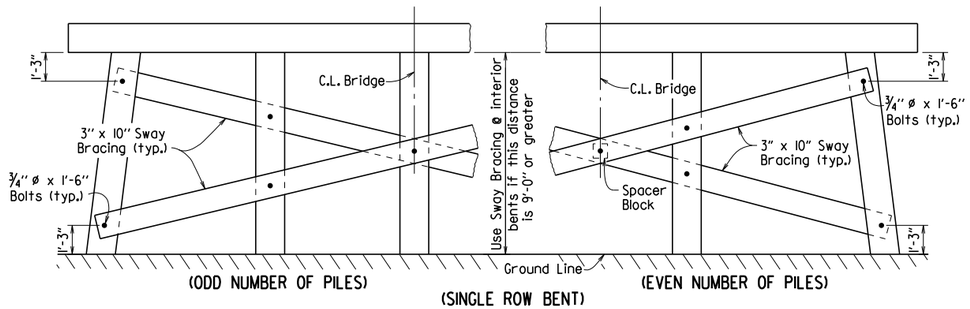

DETAILS OF SWAY BRACING FOR TIMBER PILES

Note: Sway Bracing, if required, shall be used on both lines of piles for Tower Bents.

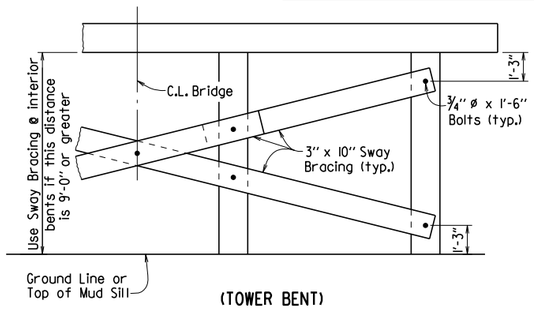

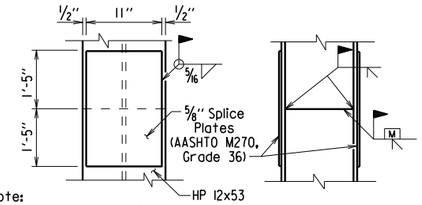

Note:
The Contractor may for his own convenience and at his own expense provide as many as three splices per pile for steel bearing piling. Minimum spacing between splices shall be 5 ft. A proprietary steel pile splicer sufficient to develop the full strength of the section may be substituted for the details shown. Pile splicers shall be installed in accordance with manufacturer's recommendations.

PILE SPLICE DETAIL

GENERAL NOTES

DESIGN SPECIFICATIONS: AASHTO Standard Specifications for Highway Bridges, 2002 Edition

CONSTRUCTION SPECIFICATIONS: Arkansas State Highway and Transportation Department Standard Specifications for Highway Construction, 2014 Edition, with applicable special provisions and supplemental specifications.

SEISMIC PERFORMANCE ZONE: 1

DESIGN LIVE LOADS: H 15-44 (No Overload).

DESIGN DEAD LOADS: 50 lbs. per cu. ft. for lumber
150 lbs. per cu. ft. for concrete

Precast Concrete Units shall comply with the requirements of AHTD standard drawings and special provisions. Drawings for old style units are within the drawing series 5291 thru 5307 and 14800 thru 14899. New style units (Current Design) are within the drawing series 15190 thru 15400.

Load Factor Design is used for the new style precast concrete units. Allowable Stress Design is used for the old style precast concrete units and timber components. The allowable unit stresses used assume normal duration of loading for stress grades of sawn lumber and are as follows:

fb=1200 psi
fv=85 psi

Concrete shall be Class S with a minimum 28 day compressive strength f'c = 3500 psi unless otherwise noted.

All reinforcing steel shall be Grade 60 (yield strength = 60,000 psi) conforming to AASHTO M31 or M322, Type A, with mill test reports.

Structural Steel shall be AASHTO M 270, Grade 36 unless otherwise noted.

Timber piling shall comply with Section 818 of the Standard Specifications and shall be driven to a minimum bearing capacity of 20 tons per pile. Steel piling shall be HP12x53 and shall be driven to a minimum bearing capacity of 44 tons per pile.

Malleable or cast iron washers shall be used under all bolt heads and nuts bearing on timber. Standard washers shall be provided under all bolt heads and nuts in connection with concrete.

Bolts shall conform to the requirements of ASTM A 307. ASTM A 307 Threaded Rods may be used in lieu of bolts. Minimum dimensions are shown for bolts, dowels, and drift pins.

Grout placed around Drift Pins in piles shall be allowed to cure for 72 hours before caps are used to support the superstructure. Grout to consist of one part portland cement to two parts sand.

Melted sulfur may be used in lieu of grout placed around drift pins. The superstructure may be placed as soon as the sulfur has hardened.

Bent caps to be handled from points approximately 5' from the ends.

Timber material, regardless of species, must be of equal or better strength than no. 2 southern pine or douglas fir, graded by the standard grading rules. All timber widths and thicknesses are shown as nominal.

For additional notes concerning "Bridge End Protection System", see Std. Dwg. 55054.

Unless otherwise noted, the Temporary Bridge Structure shall comply with and be paid for in accordance with Section 603.

This document was originally issued and sealed by Carl J. Fuselier, PE No. 7510, on April 17, 2014. This copy is not a signed and sealed document.

STATE OF ARKANSAS
REGISTERED PROFESSIONAL ENGINEER
No. 7510
CARL J. FUSELIER

BRIDGE ENGINEER

SHEET 1 OF 2

STANDARD DETAILS FOR TEMPORARY BRIDGE STRUCTURE PRECAST CONCRETE SPANS 20' ROADWAY WIDTH

ROUTE SEC.

ARKANSAS STATE HIGHWAY COMMISSION

LITTLE ROCK, ARK.

DRAWN BY: JYP DATE: 4-17-14 FILENAME: b55052.dgn
CHECKED BY: AMS DATE: 4-17-14 SCALE: No Scale
DESIGNED BY: STD. DATE: —

DRAWING NO. 55052

DATE REVISED	DATE FILMED	DATE REVISED	DATE FILMED	FED. ROAD DIST. NO.	STATE	FED. AID PROJ. NO.	SHEET NO.	TOTAL SHEETS
				6	ARK.			
				JOB NO.				
				①		TEMP. BRIDGE	55053	

Note: Reinforcing steel in cap shall be placed to not interfere with dowel bars.

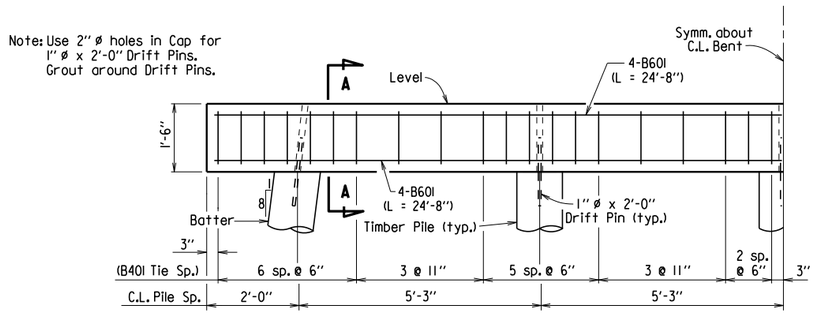

ELEVATION

PRECAST CAP & TIMBER PILES
("SI" + "S2" ≤ 44')

"S" = Span Length

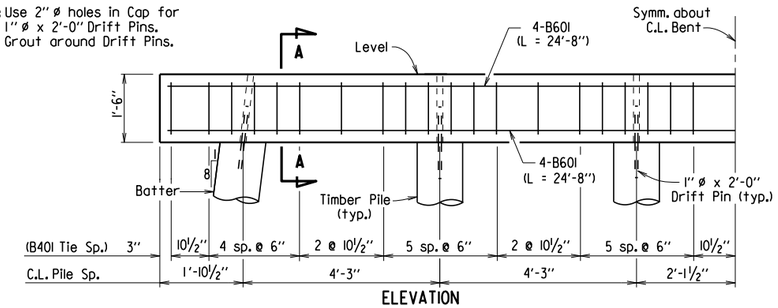

ELEVATION

PRECAST CAP & TIMBER PILES
(44' < "SI" + "S2" ≤ 62')

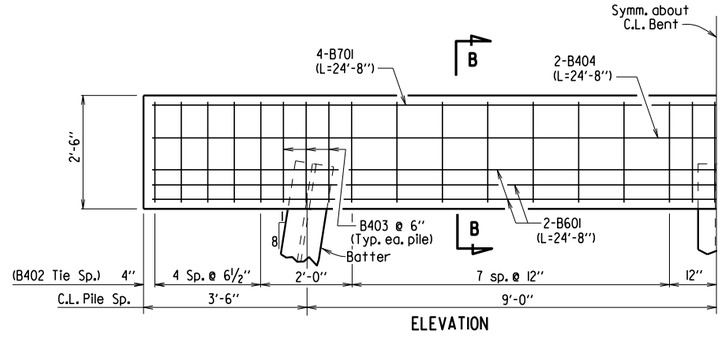

ELEVATION

CAST IN PLACE CAP & HP 12X53 PILES

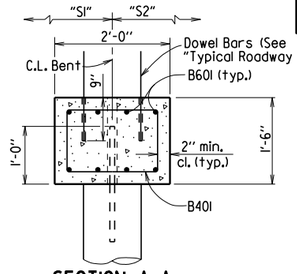

SECTION A-A

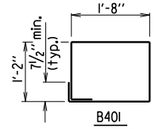

NOTE: THE ENDS OF ALL PRECAST SPANS SHALL BE FIXED TO THE CAP USING I DOWEL BAR IN EACH OF THE CURB UNITS.

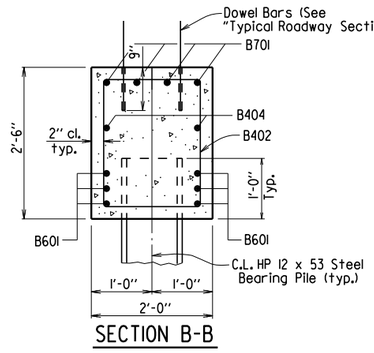

SECTION B-B

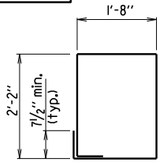

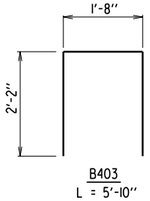

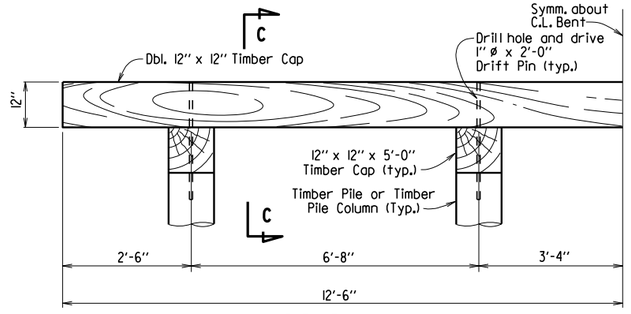

ELEVATION

TOWER BENT - TIMBER CAP & PILES

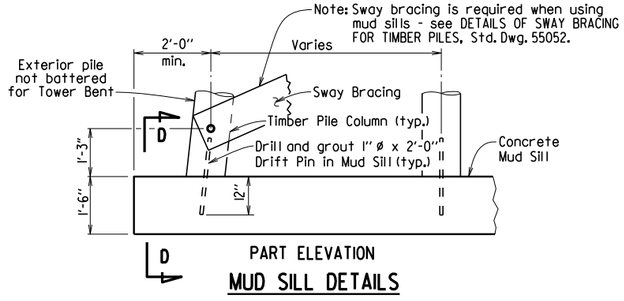

PART ELEVATION

MUD SILL DETAILS

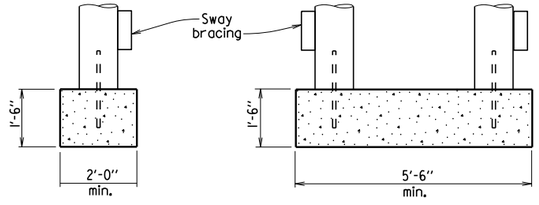

SECTION D-D
(When bottom of cap to top of mud sill is 10' or less)

SECTION D-D
(When bottom of cap to top of mud sill is greater than 10')

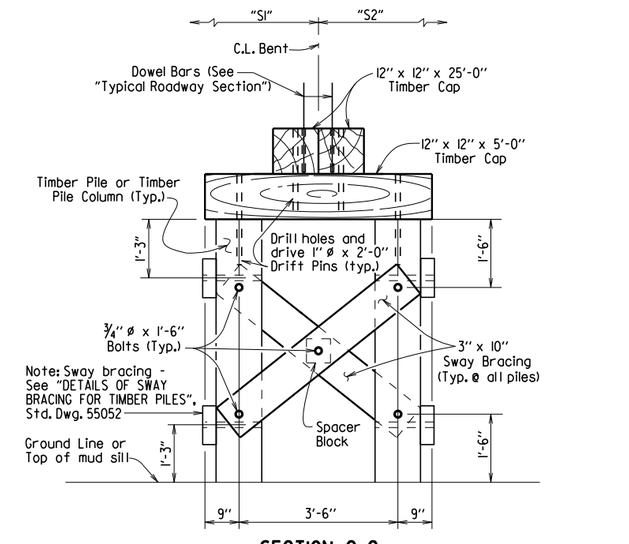

SECTION C-C

SELECTION OF BENT TYPES

These temporary bridge drawings provide the following bent types:
- Driven timber piles with precast concrete cap.
- Driven steel HP 12x53 piles with cast in place concrete cap.
- Tower bent with driven timber piles and timber cap.
- Mud sill with timber pile columns and precast concrete cap.
- Tower bent with mud sill and timber pile columns and timber cap.

Guidelines to be used in determining the appropriate bent type are:

1) Driven piles may be used at intermediate bents if a pile penetration of at least 15' below the ground line can be obtained. At end bents, a pile penetration of at least 5' below the bottom of cap is required. Pile penetration measurements at end bents can include embankment, but fill material may not be placed around intermediate bent piles in order to meet the 15' requirement.

2) If driven timber piles are used at intermediate bents and the distance from the bottom of cap to ground line exceeds 15' at any intermediate bent, tower bents must be used at the minimum rate of one tower bent for every 160' of total bridge length. Tower bent(s), when required, shall be placed at the bent location(s) having the greatest distance from bottom of cap to ground line.

3) If piles cannot be practically driven at a bent, mud sills shall be used. All soft and yielding material shall be removed from the bearing area before placing the sill concrete.

4) Timber piles shall be used as columns in mud sills. The column spacing shall be the same as that used for driven timber pile bents for the appropriate span lengths involved.

5) If a mud sill is to be used and the distance from the bottom of cap to ground line is more than 10', a tower bent with mud sill must be used at that location.

6) A timber cap may be used only if tower bents are used.

This document was originally issued and sealed by Carl J. Fuselier, PE No. 7510, on April 17, 2014. This copy is not a signed and sealed document.

STATE OF ARKANSAS
REGISTERED PROFESSIONAL ENGINEER
No. 7510
CARL J. FUSELIER

BRIDGE ENGINEER

SHEET 2 OF 2

STANDARD DETAILS FOR TEMPORARY BRIDGE STRUCTURE PRECAST CONCRETE SPANS 20' ROADWAY WIDTH

ROUTE SEC.

ARKANSAS STATE HIGHWAY COMMISSION

LITTLE ROCK, ARK.

DRAWN BY: JYP DATE: 4-17-14 FILENAME: b55053.dgn
CHECKED BY: AMS DATE: 4-17-14 SCALE: No Scale
DESIGNED BY: STD. DATE: —

DRAWING NO. 55053

DATE REVISED	DATE FILMED	DATE REVISED	DATE FILMED	FED. ROAD DIST. NO.	STATE	FED. AID PROJ. NO.	SHEET NO.	TOTAL SHEETS
				6	ARK.			
				JOB NO.				
						TEMP. BRIDGE		55054

(1)

Note: Post spacing shown to be used for all guard rail types.

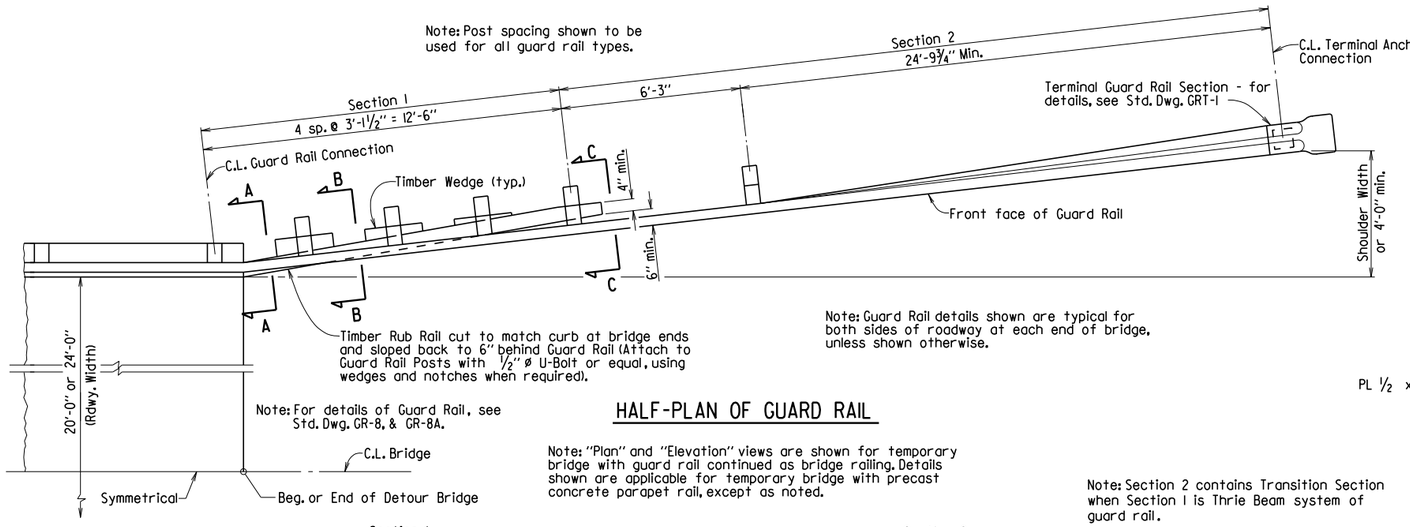

Note: For details of Guard Rail, see Std. Dwg. GR-8, & GR-8A.

HALF-PLAN OF GUARD RAIL

Note: Guard Rail details shown are typical for both sides of roadway at each end of bridge, unless shown otherwise.

Note: "Plan" and "Elevation" views are shown for temporary bridge with guard rail continued as bridge railing. Details shown are applicable for temporary bridge with precast concrete parapet rail, except as noted.

Note: Section 2 contains Transition Section when Section 1 is Thrie Beam system of guard rail.

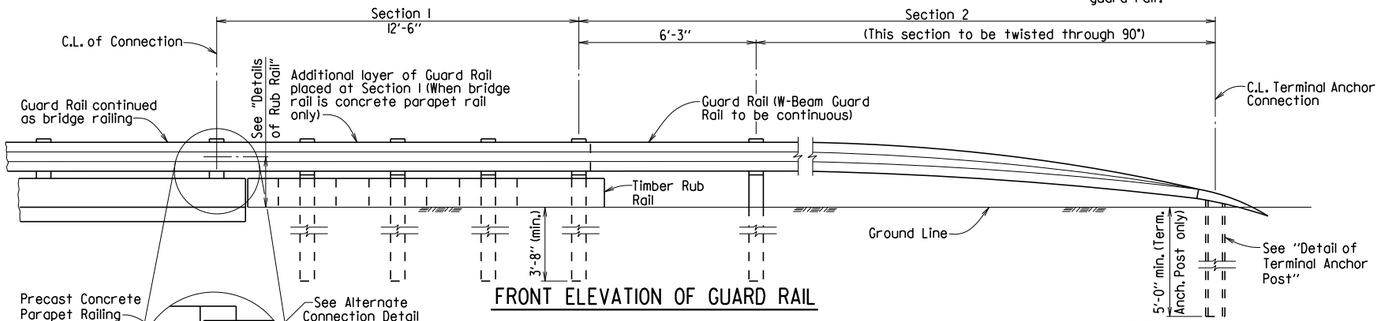

FRONT ELEVATION OF GUARD RAIL

Note: For details of Thrie Beam system of guard rail, see Std. Dwg. GR-10 & GR-10A. Thrie Beam rail and five bolt connection as shown on GR-10 are required when precast rail has five cast holes for guard rail connection.

** Two ¾" ø H.S. Bolts are required. Use 7" x 2½" x 3/16" washer with two ⅞" ø holes against back of parapet and on roadway face of guard rail (Bend to fit guard rail) with 1½" o.d. steel washer under heads and nuts (Clipped to 1⅝" x 1½" at nuts).

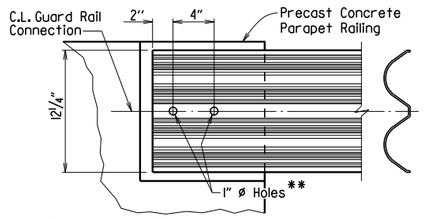

W-BEAM GUARD RAIL CONNECTION AT CONCRETE PARAPET RAIL

Note: This guard rail connection will only be allowed on precast concrete parapet rail units with a 12½" x 14" x 3⅜" notch at the end of the unit for connection of guard rails.

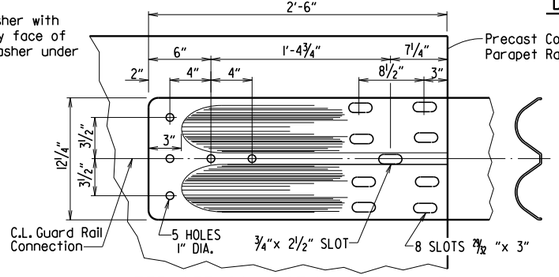

ALTERNATE CONNECTION DETAIL WITH SPECIAL END SHOE FOR W-BEAM GUARD RAIL CONNECTION AT CONCRETE PARAPET RAIL

Note: Special End Shoe and four ⅞" ø x 2½" H.S. Bolts are required when concrete insert anchor assembly is present in precast rail unit.

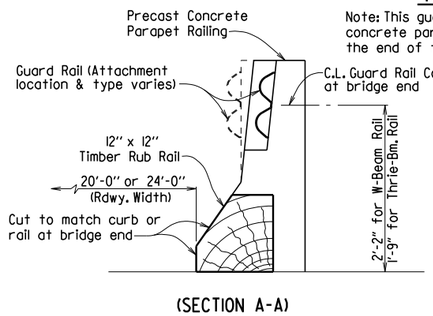

(SECTION A-A)

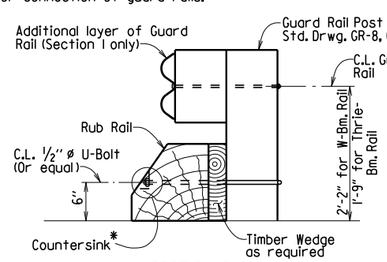

(SECTION B-B)

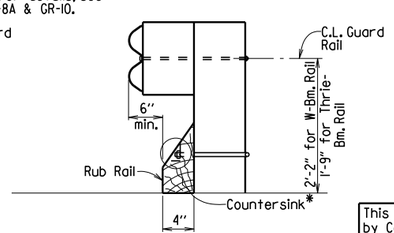

(SECTION C-C)

DETAILS OF RUB RAIL (CONC. PARAPET BRIDGE RAIL)

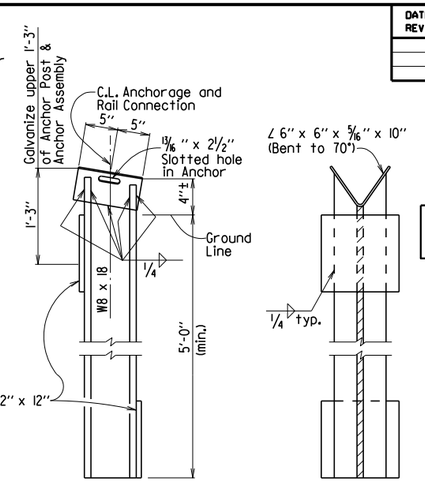

(ELEVATION)

(SECTION)

Note: Post shall be driven or set in dug hole and compacted.

DETAILS OF TERMINAL ANCHOR POST

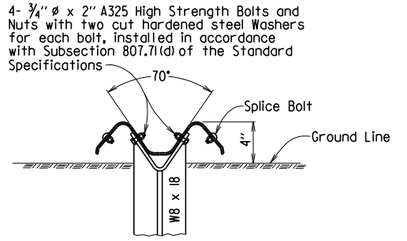

DETAILS OF TERMINAL ANCHOR CONNECTION

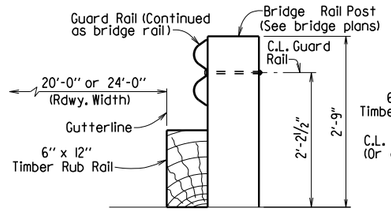

(SECTION A-A)

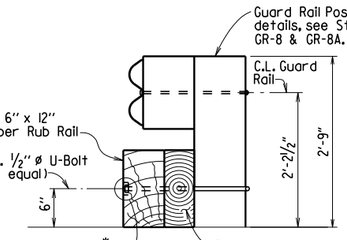

(SECTION B-B)

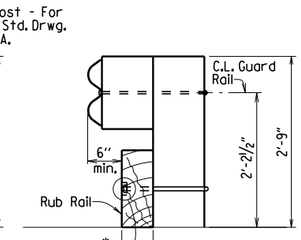

(SECTION C-C)

DETAILS OF RUB RAIL (CONTINUOUS W-BEAM RAIL)

* U-Bolt Assembly, or equal, shall not project beyond rdwy. face of Rub Rail at any location.

This document was originally issued and sealed by Carl J. Fuselier, PE No. 7510, on April 17, 2014. This copy is not a signed and sealed document.

STATE OF ARKANSAS
REGISTERED PROFESSIONAL ENGINEER
No. 7510
CARL J. FUSELIER

BRIDGE ENGINEER

GENERAL NOTES

Bridge End Protection is required on both sides of roadway at both ends of temporary bridge. The end protection system shall consist of a minimum of two end sections (Section 1 and Section 2). If additional guard rail is used, it shall be placed in Section 2 and shall have a maximum post spacing of 6'-3".

If W-Beam Guard Rail is also used as Bridge Rail, it shall be continuous from terminal anchor post to terminal anchor post with splices as shown on Std. Drwg. GR-8.

A doubled guard rail beam section (One W-Beam Rail section or one Thrie Beam Rail section nested inside the other) shall be required for Section 1 if the guard rail is not continued as bridge rail, but connects directly to a precast concrete parapet bridge rail end.

Rub rails shown in Section 1 are representative of members required to transition the curb or wheel guard section to a minimum distance behind the face of guard rail.

Timber rub rail, regardless of species, must be of equal or better strength than no. 2 southern pine or douglas fir, graded by the standard grading rules. All timber widths and thicknesses are shown as nominal.

Except as noted, bolts shall conform to the requirements of ASTM A 307 and minimum dimensions as shown. Malleable or cast iron washers to be used under all bolt heads and nuts bearing on timber. High strength bolts shall conform to Section 807.

Guard rail as described in Subsection 617.01 of the Standard Specifications and these plans shall be constructed in accordance with Subsection 617.03. Subsection 617.02 is modified to allow the use of materials consistent with the requirements of Section 603.

Payment: The bridge end protection system completed and accepted will not be paid for directly, but shall be included in the contract unit price bid per linear foot for temporary bridge structure, which price shall be full compensation for furnishing materials and erecting guard rail, line posts, blockouts, rub rails, terminal anchor posts, etc.; and for all labor, tools, equipment and incidentals necessary to complete the work.

GUARD RAIL CONNECTION COMBINATIONS

BRIDGE RAIL TYPE	GUARD RAIL AND CONNECTION TYPE
Guard Rail continued as bridge railing	W-Beam Guard Rail. See Std. Drwg. GR-8 for splice details.
Concrete Parapet with 12½" x 14" x 3⅜" notch and two cast in holes	W-Beam Guard Rail fastened with two high-strength bolts as shown; blunt end on guard rail. Guard Rail doubled at Section 1.
Concrete Parapet with Concrete Insert Anchor assembly (4-Bolt embedded Anchor) flush with rail face	W-Beam Guard Rail fastened with four high-strength bolts; Special End Shoe. Guard Rail doubled at Section 1.
Concrete Parapet with 5 cast in holes	Thrie Beam Guard Rail; five high-strength through bolts with back-up plate; special end shoe as shown on Std. Dwg. GR-10. Guard Rail doubled at Section 1. Section 2 contains transitional rail and W-Beam Guard Rail.

STANDARD DETAILS FOR TEMPORARY BRIDGE STRUCTURE BRIDGE END PROTECTION SYSTEM

ROUTE SEC.

ARKANSAS STATE HIGHWAY COMMISSION

LITTLE ROCK, ARK.

DRAWN BY:	JYP	DATE:	4-17-14	FILENAME:	b55054.dgn
CHECKED BY:	AMS	DATE:	4-17-14	SCALE:	No Scale
DESIGNED BY:	STD.	DATE:	—		

DRAWING NO. 55054

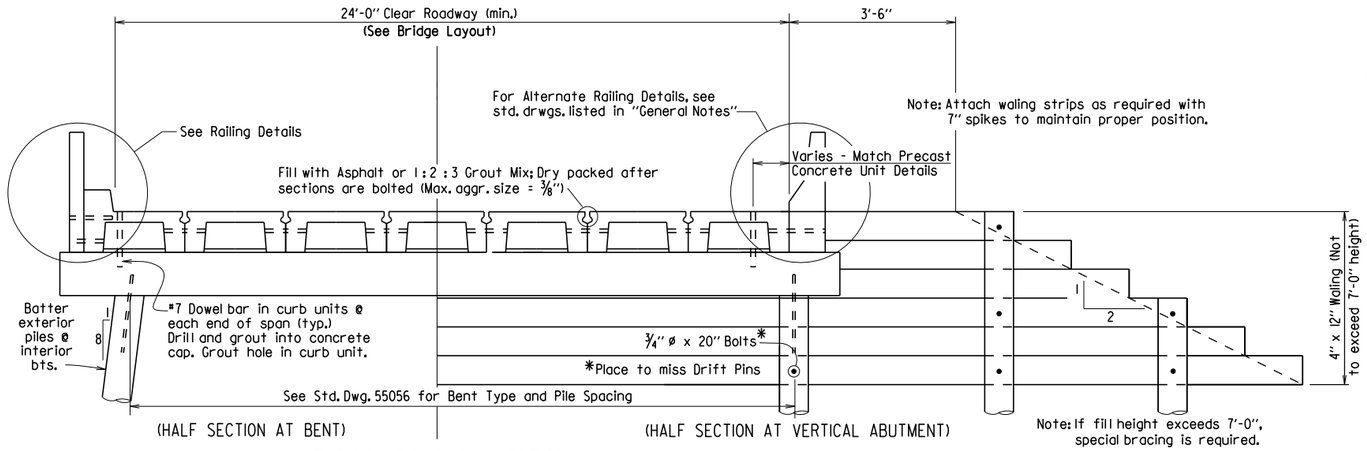

TYPICAL ROADWAY SECTION

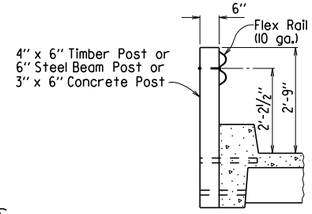

RAILING DETAILS

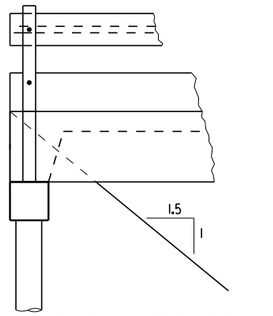

Note: Piles for Alternate Abutment to be driven after embankment is in place.

ALTERNATE SPILL-THRU ABUTMENT

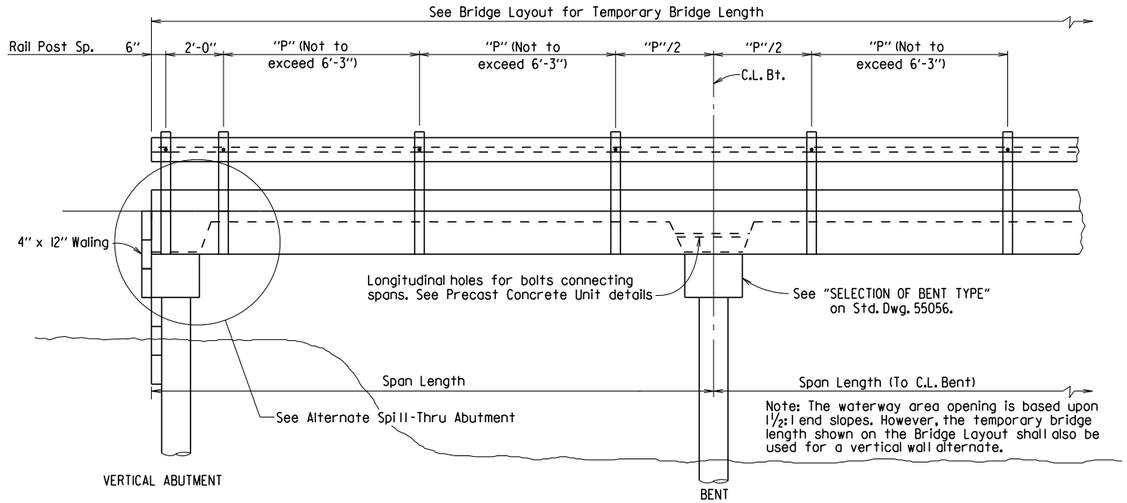

LONGITUDINAL SECTION

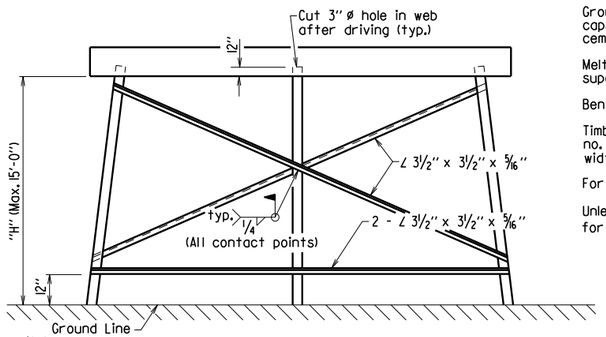

Note:
All bracing shall be cut and welded in the field. Each brace shall be furnished in one piece. Payment for any bracing required shall be considered incidental to Item 603 "Temporary Bridge Structure".

Omit bottom bracing when "H" is less than 10'. Omit all bracing when "H" is less than 5'. When "H" exceeds 15', additional X-bracing is required to provide a maximum unbraced pile length of 14'.

DETAILS OF BRACING FOR STEEL PILES

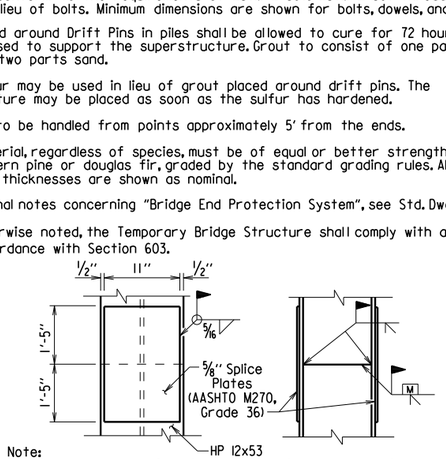

Note:
The Contractor may for his own convenience and at his own expense provide as many as three splices per pile for steel bearing piling. Minimum spacing between splices shall be 5 ft. A proprietary steel pile splicer sufficient to develop the full strength of the section may be substituted for the details shown. Pile splicers shall be installed in accordance with manufacturer's recommendations.

PILE SPLICE DETAIL

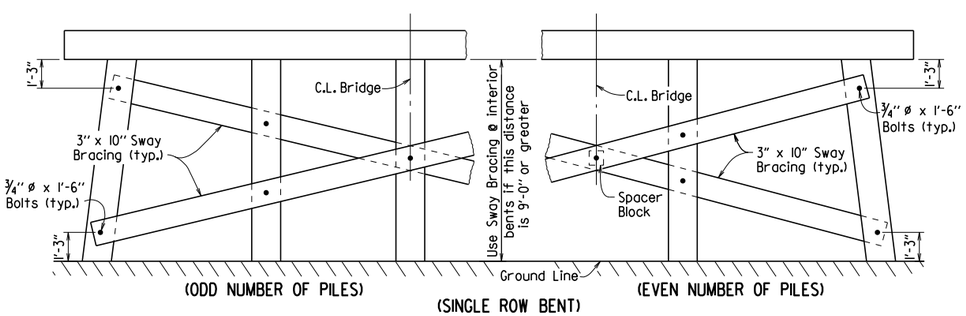

DETAILS OF SWAY BRACING FOR TIMBER PILES

Note: Sway Bracing, if required, shall be used on both lines of piles for Tower Bents.

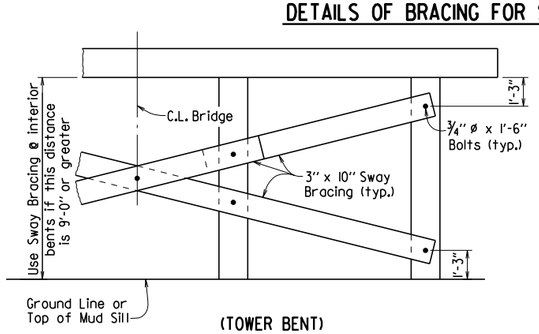

This document was originally issued and sealed by Carl J. Fuselier, PE No. 7510, on April 17, 2014. This copy is not a signed and sealed document.

STATE OF ARKANSAS
REGISTERED PROFESSIONAL ENGINEER
No. 7510
CARL J. FUSELIER

BRIDGE ENGINEER

DATE REVISED	DATE FILMED	DATE REVISED	DATE FILMED	FED. ROAD DIST. NO.	STATE	FED. AID PROJ. NO.	SHEET NO.	TOTAL SHEETS
				6	ARK.			
				JOB NO.				
						TEMP. BRIDGE		55055

GENERAL NOTES

DESIGN SPECIFICATIONS: AASHTO Standard Specifications for Highway Bridges, 2002 Edition, with current interim specifications.

CONSTRUCTION SPECIFICATIONS: Arkansas State Highway and Transportation Department Standard Specifications for Highway Construction, 2014 Edition, with applicable special provisions and supplemental specifications.

SEISMIC PERFORMANCE ZONE: 1

DESIGN LIVE LOADS: H 15-44 (No Overload).

DESIGN DEAD LOADS: 50 lbs. per cu. ft. for lumber
150 lbs. per cu. ft. for concrete

Precast Concrete Units shall comply with the requirements of AHTD standard drawings and special provisions. Drawings for old style units are within the drawing series 5291 thru 5307 and 14800 thru 14899. New style units (Current Design) are within the drawing series 15190 thru 15400.

Load Factor Design is used for the new style precast concrete units. Allowable Stress Design is used for the old style precast concrete units and timber components. The allowable unit stresses used assume normal duration of loading for stress grades of sawn lumber and are as follows:

fb=1200 psi
fv=85 psi

Concrete shall be Class S with a minimum 28 day compressive strength f'c = 3500 psi unless otherwise noted.

All reinforcing steel shall be Grade 60 (yield strength = 60,000 psi) conforming to AASHTO M31 or M322, Type A, with mill test reports.

Structural Steel shall be AASHTO M 270, Grade 36 unless otherwise noted.

Timber piling shall comply with Section 818 of the Standard Specifications and shall be driven to a minimum bearing capacity of 20 tons per pile. Steel piling shall be HP12x53 and shall be driven to a minimum bearing capacity of 44 tons per pile.

Malleable or cast iron washers shall be used under all bolt heads and nuts bearing on timber. Standard washers shall be provided under all bolt heads and nuts in connection with concrete.

Bolts shall conform to the requirements of ASTM A 307. ASTM A 307 Threaded Rods may be used in lieu of bolts. Minimum dimensions are shown for bolts, dowels, and drift pins.

Grout placed around Drift Pins in piles shall be allowed to cure for 72 hours before caps are used to support the superstructure. Grout to consist of one part portland cement to two parts sand.

Melted sulfur may be used in lieu of grout placed around drift pins. The superstructure may be placed as soon as the sulfur has hardened.

Bent caps to be handled from points approximately 5' from the ends.

Timber material, regardless of species, must be of equal or better strength than no. 2 southern pine or douglas fir, graded by the standard grading rules. All timber widths and thicknesses are shown as nominal.

For additional notes concerning "Bridge End Protection System", see Std. Dwg. 55054.

Unless otherwise noted, the Temporary Bridge Structure shall comply with and be paid for in accordance with Section 603.

SHEET 1 OF 2

STANDARD DETAILS FOR TEMPORARY BRIDGE STRUCTURE PRECAST CONCRETE SPANS 24' ROADWAY WIDTH

ROUTE SEC.

ARKANSAS STATE HIGHWAY COMMISSION

LITTLE ROCK, ARK.

DRAWN BY: JYP DATE: 4-17-14 FILENAME: b55055.dgn
CHECKED BY: AMS DATE: 4-17-14 SCALE: No Scale
DESIGNED BY: STD. DATE: —

DRAWING NO. 55055

DATE REVISED	DATE FILMED	DATE REVISED	DATE FILMED	FED. ROAD DIST. NO.	STATE	FED. AID PROJ. NO.	SHEET NO.	TOTAL SHEETS
				6	ARK.			
				JOB NO.				
				①		TEMP. BRIDGE	55056	

Note: Reinforcing steel in cap shall be placed to not interfere with dowel bars.

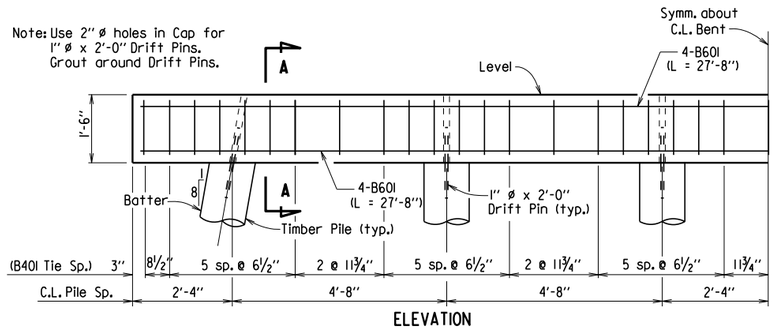

ELEVATION

PRECAST CAP & TIMBER PILES
("SI" + "S2" ≤ 38')

"S" = Span Length

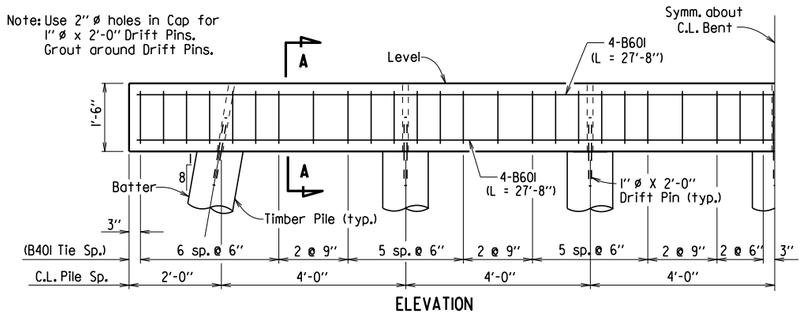

ELEVATION

PRECAST CAP & TIMBER PILES
(38' < "SI" + "S2" ≤ 50')

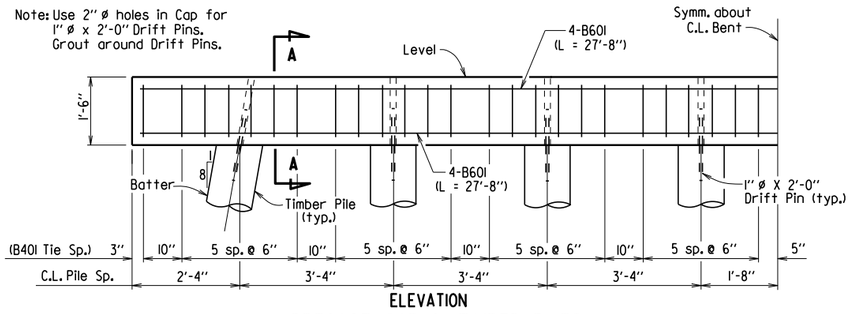

ELEVATION

PRECAST CAP & TIMBER PILES
(50' < "SI" + "S2" ≤ 62')

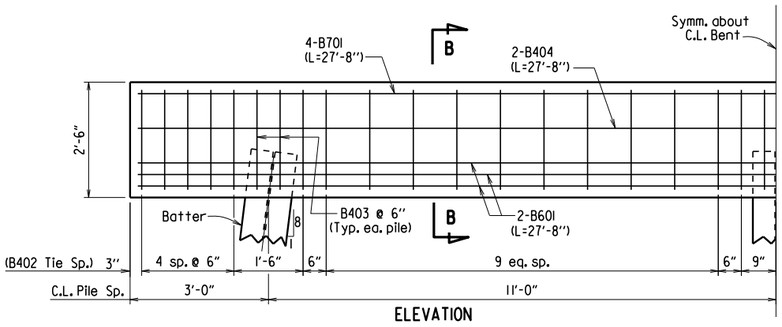

ELEVATION

CAST IN PLACE CAP & HP 12X53 PILES

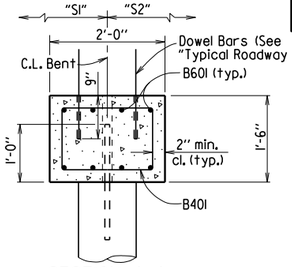

SECTION A-A

NOTE: THE ENDS OF ALL PRECAST SPANS SHALL BE FIXED TO THE CAP USING I DOWEL BAR IN EACH OF THE CURB UNITS.

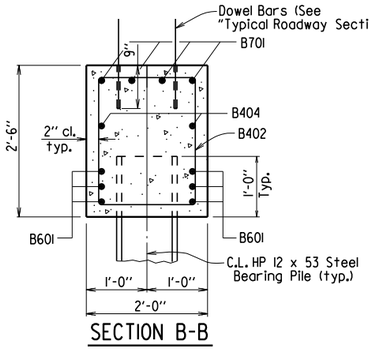

SECTION B-B

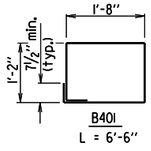

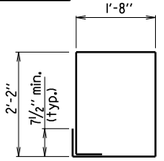

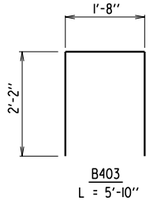

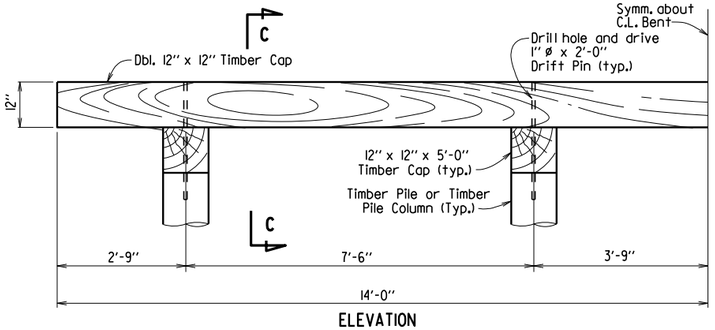

ELEVATION

TOWER BENT - TIMBER CAP & PILES

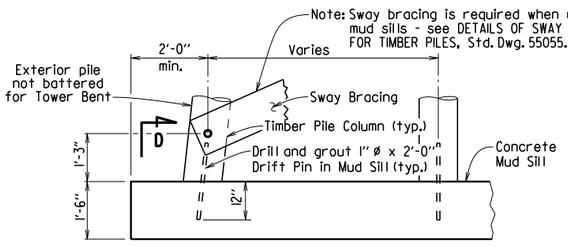

PART ELEVATION

MUD SILL DETAILS

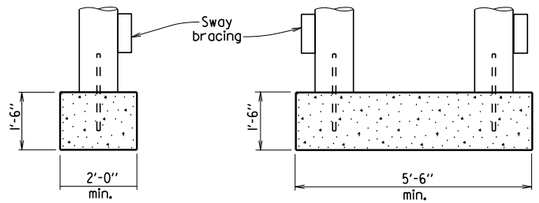

SECTION D-D
(When bottom of cap to top of mud sill is 10' or less)

SECTION D-D
(When bottom of cap to top of mud sill is greater than 10')

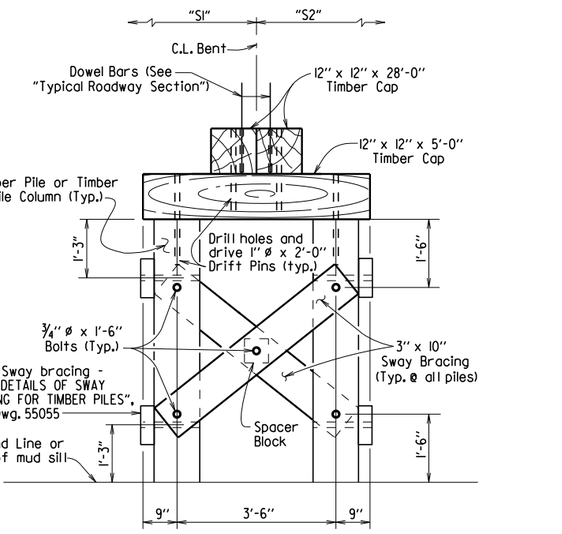

SECTION C-C

SELECTION OF BENT TYPES

These temporary bridge drawings provide the following bent types:
- Driven timber piles with precast concrete cap.
- Driven steel HP 12x53 piles with cast in place concrete cap.
- Tower bent with driven timber piles and timber cap.
- Mud sill with timber pile columns and precast concrete cap.
- Tower bent with mud sill and timber pile columns and timber cap.

Guidelines to be used in determining the appropriate bent type are:

1) Driven piles may be used at intermediate bents if a pile penetration of at least 15' below the ground line can be obtained. At end bents, a pile penetration of at least 5' below the bottom of cap is required. Pile penetration measurements at end bents can include embankment, but fill material may not be placed around intermediate bent piles in order to meet the 15' requirement.

2) If driven timber piles are used at intermediate bents and the distance from the bottom of cap to ground line exceeds 15' at any intermediate bent, tower bents must be used at the minimum rate of one tower bent for every 160' of total bridge length. Tower bent(s), when required, shall be placed at the bent location(s) having the greatest distance from bottom of cap to ground line.

3) If piles cannot be practically driven at a bent, mud sills shall be used. All soft and yielding material shall be removed from the bearing area before placing the sill concrete.

4) Timber piles shall be used as columns in mud sills. The column spacing shall be the same as that used for driven timber pile bents for the appropriate span lengths involved.

5) If a mud sill is to be used and the distance from the bottom of cap to ground line is more than 10', a tower bent with mud sill must be used at that location.

6) A timber cap may be used only if tower bents are used.

This document was originally issued and sealed by Carl J. Fuselier, PE No. 7510, on April 17, 2014. This copy is not a signed and sealed document.

STATE OF ARKANSAS
REGISTERED PROFESSIONAL ENGINEER
No. 7510
CARL J. FUSELIER

BRIDGE ENGINEER

SHEET 2 OF 2

STANDARD DETAILS FOR TEMPORARY BRIDGE STRUCTURE PRECAST CONCRETE SPANS 24' ROADWAY WIDTH

ROUTE SEC.

ARKANSAS STATE HIGHWAY COMMISSION

LITTLE ROCK, ARK.

DRAWN BY: JYP DATE: 4-17-14 FILENAME: b55056.dgn
CHECKED BY: AMS DATE: 4-17-14 SCALE: No Scale
DESIGNED BY: STD. DATE: —

DRAWING NO. 55056

DATE REVISED	DATE FILMED	DATE REVISED	DATE FILMED	FED. ROAD DIST. NO.	STATE	FED. AID PROJ. NO.	SHEET NO.	TOTAL SHEETS
				6	ARK.			
				JOB NO.				
				①		TEMP. BRIDGE	55057	

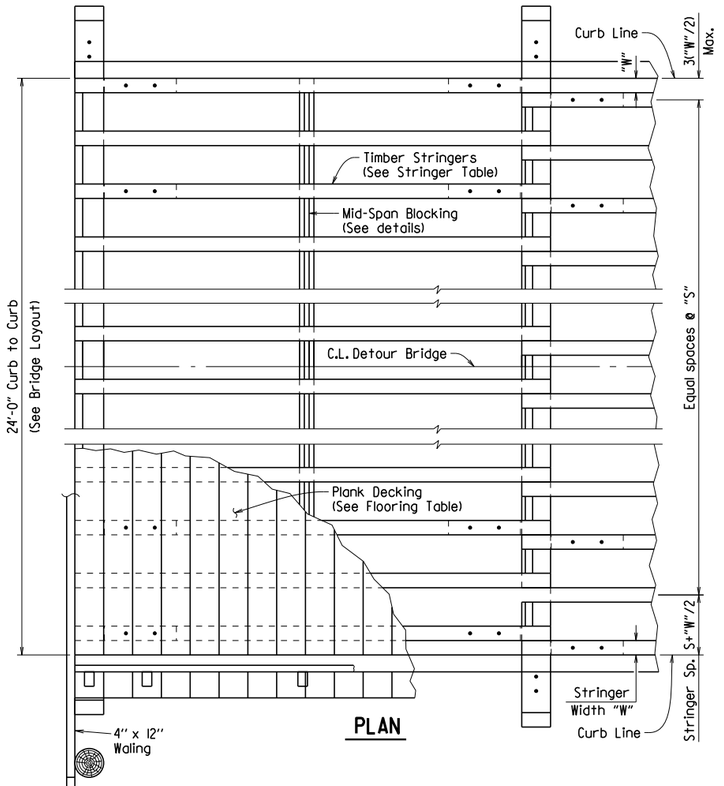

PLAN

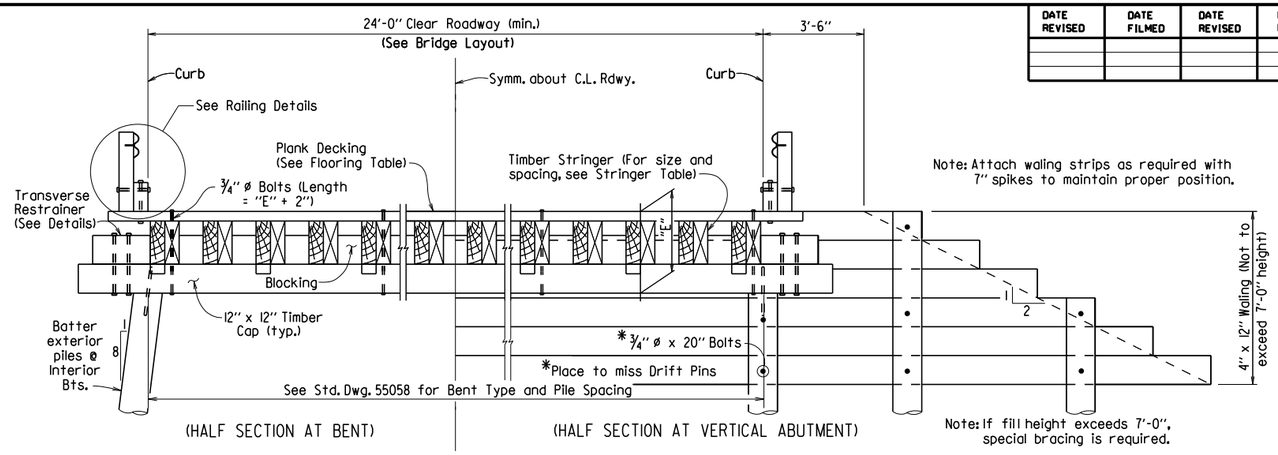

TYPICAL ROADWAY SECTION

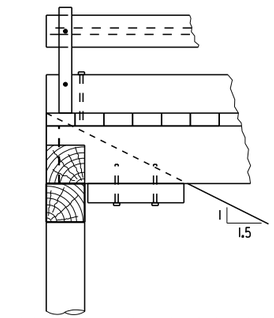

Note: Piles for Alternate Abutment to be driven after embankment is in place.

ALTERNATE SPILL-THRU ABUTMENT

Max. Stringer Spacing "S"	Plank Size (Nominal)
14.5"	3" X 6"
16.5"	3" X 8"
18.0"	3" X 10"
19.5"	3" X 12"
21.5"	4" X 8"
24.0"	4" X 10"
26.5"	4" X 12"

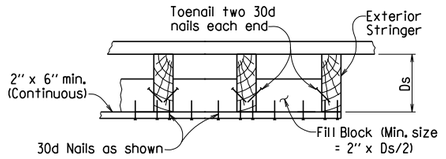

BLOCKING DETAILS AT MID-SPAN

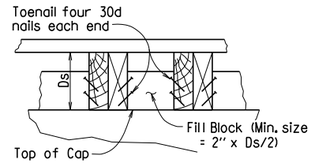

BLOCKING DETAIL AT BENTS

Note: Blocking details shown are for Bents. Details of blocking at Abutments are similar, except that depth of fill block shall be equal to Ds if Alternate Spill-Thru Abutment is used.

GENERAL NOTES

DESIGN SPECIFICATIONS: AASHTO Standard Specifications for Highway Bridges, 2002 Edition.

CONSTRUCTION SPECIFICATIONS: Arkansas State Highway and Transportation Department Standard Specifications for Highway Construction, 2014 Edition, with applicable Special Provisions and Supplemental Specifications.

SEISMIC PERFORMANCE ZONE: 1

DESIGN LIVE LOADS: H 15-44 (No Overload). Impact was not included in the design of superstructure for timber bridges.

DESIGN DEAD LOADS: 50 lbs. per cu. ft. for lumber
150 lbs. per cu. ft. for concrete

Allowable Stress Design is used for the standard timber bridges. The allowable unit stresses used assume normal duration of loading for stress grades of sawn lumber and are as follows: fb= 1200 psi
fv= 85 psi

Concrete shall be Class S with a minimum 28 day compressive strength f'c= 3500 psi unless otherwise noted.

All reinforcing steel shall be Grade 60 (yield strength = 60,000 psi) conforming to AASHTO M31 or M322, Type A, with mill test reports.

Structural Steel shall be AASHTO M 270, Grade 36 unless otherwise noted.

Timber piling shall comply with Section 818 of the Standard Specifications and shall be driven to a minimum bearing capacity of 20 tons per pile. Steel piling shall be HP12X53 and shall be driven to a minimum bearing capacity of 44 tons per pile.

Malleable or cast iron washers to be used under all bolt heads and nuts bearing on timber. Standard washers shall be provided under all bolt heads and nuts in connnection with concrete.

Bolts shall conform to the requirements of ASTM A 307. ASTM A 307 Threaded Rods may be used in lieu of bolts. Minimum dimensions are shown for bolts, dowels, and drift pins.

Bent caps to be handled from points approximately 5' from the ends.

Timber material, regardless of species, must be of equal or better strength than no. 2 southern pine or douglas fir, graded by the standard grading rules. All timber widths and thicknesses are shown as nominal.

For additional notes concerning "Bridge End Protection System", see Std. Dwg. 55054.

Unless otherwise noted, the Temporary Bridge Structure shall comply with and be paid for in accordance with Section 603.

STRINGER SIZE (NOMINAL)	8.0	10.0	14.5	15.0	16.5	18.0	19.5	21.5	24.0	26.5
4" X 12"	16									
4" X 14"	21	17	15							
6" X 12"			16							
4" X 16"	26	22	19	16						
6" X 14"			21	18	17	16	15			
			26	23	22	20	19	18	16	
6" X 16"			31	28	27	25	23	22	20	18
6" X 18"								31	31	30
6" X 24"										27

MAX. STRINGER SPACING (Inches)

STRINGER & FLOORING TABLES

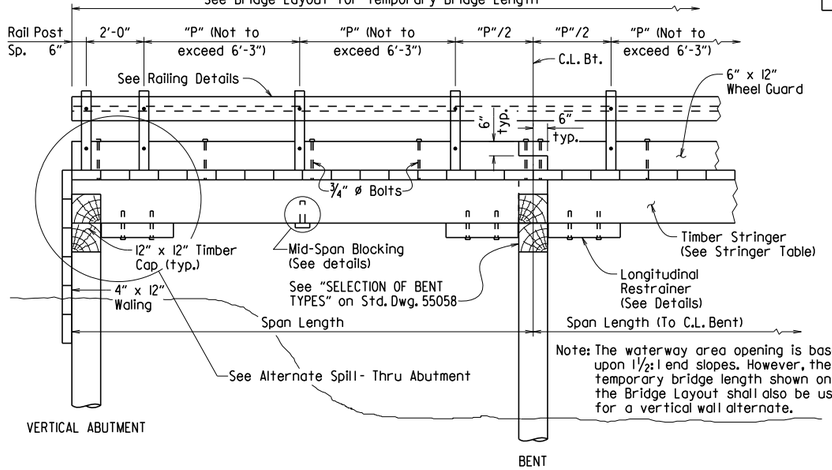

Note: The waterway area opening is based upon 1½:1 end slopes. However, the temporary bridge length shown on the Bridge Layout shall also be used for a vertical wall alternate.

LONGITUDINAL SECTION

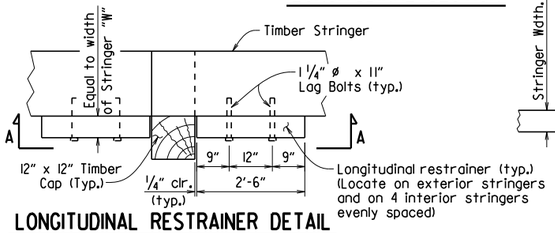

LONGITUDINAL RESTRAINER DETAIL

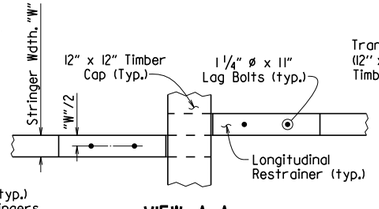

VIEW A-A

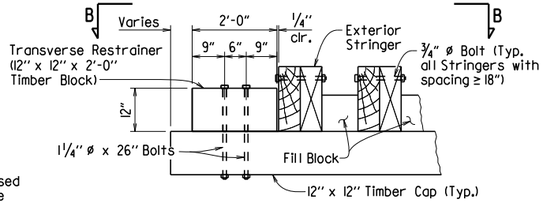

TRANSVERSE RESTRAINER DETAIL

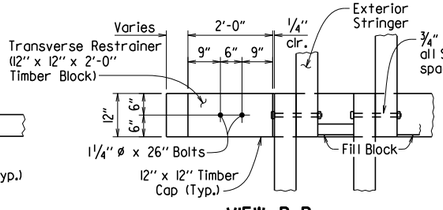

VIEW B-B

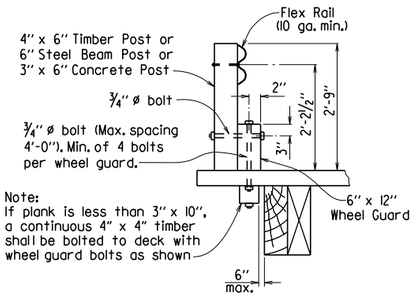

RAILING DETAILS

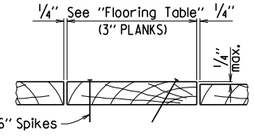

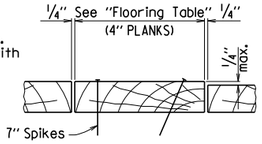

FLOOR NAILING DETAILS

Note: Planks used in plank floors shall be graded as to thickness and so laid that no two adjacent planks shall vary in thickness by more than ¼".

This document was originally issued and sealed by Carl J. Fuselier, PE No. 7510, on April 17, 2014. This copy is not a signed and sealed document.

STATE OF ARKANSAS
REGISTERED PROFESSIONAL ENGINEER
No. 7510
CARL J. FUSELIER

BRIDGE ENGINEER

SHEET 1 OF 2

STANDARD DETAILS FOR TEMPORARY BRIDGE STRUCTURE TIMBER SPANS 24' ROADWAY WIDTH

ROUTE SEC.

ARKANSAS STATE HIGHWAY COMMISSION

LITTLE ROCK, ARK.

DRAWN BY:	JYP	DATE:	4-17-14	FILENAME:	b55057.dgn
CHECKED BY:	AMS	DATE:	4-17-14	SCALE:	No Scale
DESIGNED BY:	STD.	DATE:	—		

DRAWING NO. 55057

DATE REVISED	DATE FILMED	DATE REVISED	DATE FILMED	FED. ROAD DIST. NO.	STATE	FED. AID PROJ. NO.	SHEET NO.	TOTAL SHEETS
09/27/2022				6	ARK.			
				JOB NO.				

TYPE SSTR36 - 55070

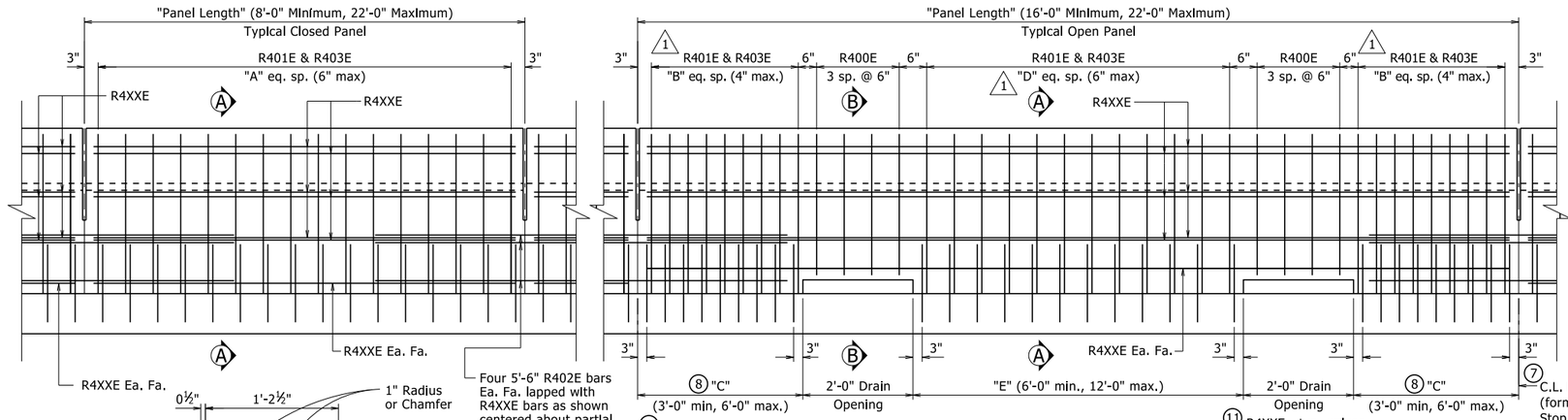

① ELEVATION - SINGLE SLOPE TRAFFIC RAIL

¾" = 1'-0"

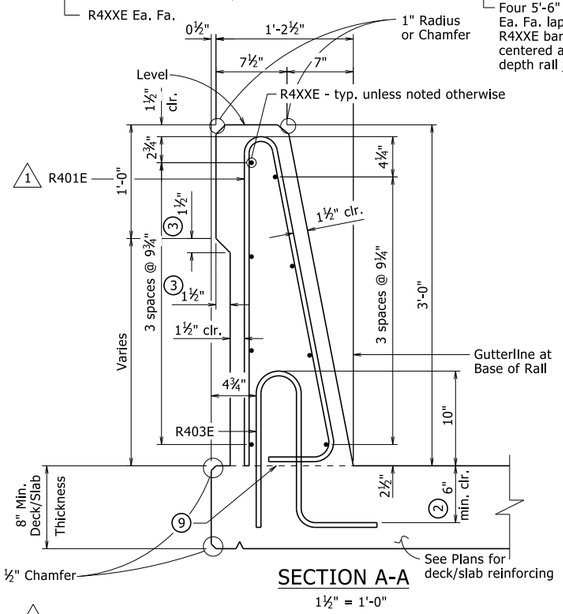

SECTION A-A

1½" = 1'-0"

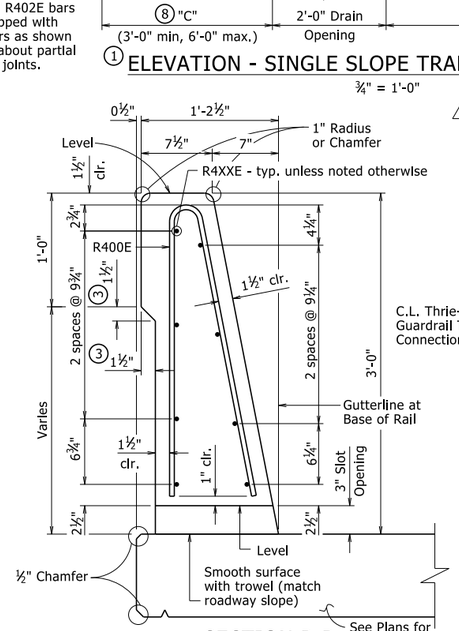

SECTION B-B

1½" = 1'-0"

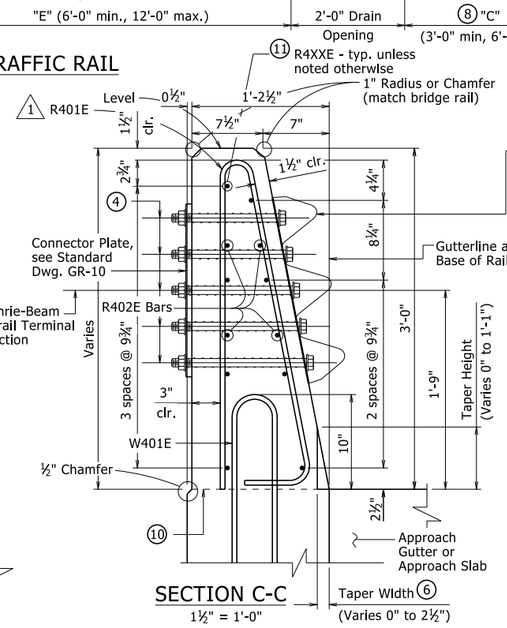

SECTION C-C

1½" = 1'-0"

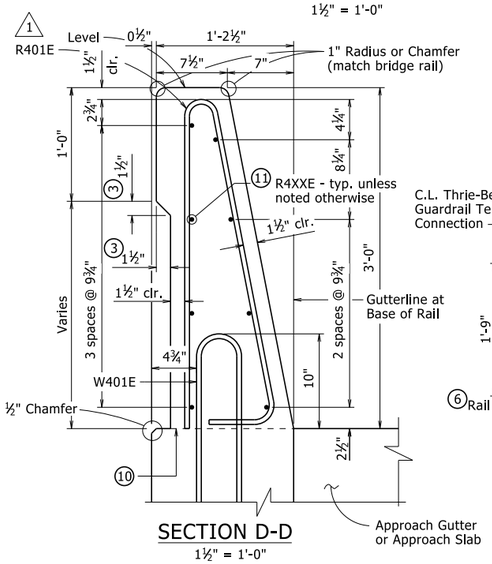

SECTION D-D

1½" = 1'-0"

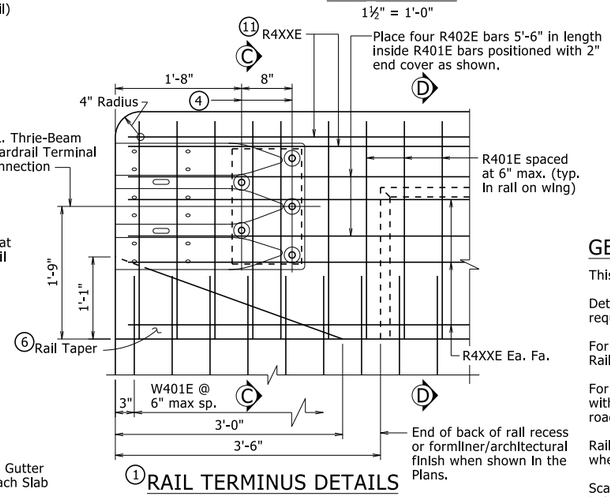

① RAIL TERMINUS DETAILS

1" = 1'-0"

⑦ C.L. Full-Depth Rail Joint (formed width ¼" to 1" max). Stop 6" from top of deck/slab or sidewalk. Place at all intermediate bents locations where rail is continuous.

⑦ C.L. Partial-Depth Rail Joint (formed width ¼" to 1" max). Stop 16" from top of deck/slab or sidewalk. Place at all remaining locations other than at intermediate bents.

① All measurements shown are along gutterline at base of rail.

② Minimum embedment into deck/slab.

③ Eliminate recess when formliner with architectural finish is used. See Plans for additional information.

④ C.L. 1" ø formed holes for ⅞" ø bolts. See Standard Drawings GR-10 and GR-12 for additional information.

⑤ Only applicable for bridges with rail cast directly on bridge deck/slab surface. Increase height as necessary for sidewalks, see Plans for additional information.

⑥ Field bend front leg of R401E bar as required to maintain minimum 1½" front face clearance within limits of taper.

⑦ When optional slip forming is used: to control cracking, all rail joints must be V-grooved around the perimeter of the rail prior to concrete set and sawing. Depth of V-groove shall be ½". Sawing of the joints shall be done as soon as practical to a width of ¼", and must be controlled so it will follow the V-Groove.

⑧ End posts shall be the same length within a panel.

Bolt Special End Shoe to face of rail as shown. Tapered washers are not required between the head of the bolts and the sloped face of the rail. Tighten the five terminal connection bolts in a well distributed pattern to prevent damage or distortion of the thrie-beam connection. Cut bolts off after installation so as to extend no more than ¾" beyond nut. Paint ends of cut-off bolts with zinc-rich paint. This work and material will not be paid for directly but shall be considered subsidiary to associated contract items.

BENDING DIAGRAM

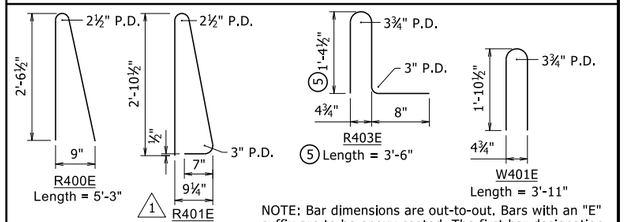

NOTE: Bar dimensions are out-to-out. Bars with an "E" suffix are to be epoxy coated. The first bar designation number indicates the reinforcing bar size.

⑨ Required Construction Joint. Level where water flows away from rail, match roadway slope where water flows toward rail.

⑩ Top of Abutment Wing & Required Construction Joint (match bridge deck/slab construction joint slope). See Plans for Wing reinforcing.

⑪ These bars will not be included in the "Table of Variables". See Plans for details.

TABLE OF VARIABLES

Closed Rail Panels			Open Rail Panels					
Panel Length	A	R4XXE	Panel Length	B	C	D	E	R4XXE

See Plans for table with values.

GENERAL NOTES

This rail has been successfully evaluated by full-scale crash test to meet MASH TL-4 criteria.

Details shown are general for bridges without sidewalks. See Plans for additional details and requirements specific to bridges with sidewalks.

For Table of Variables, Rail Bar List, locations of Full and Partial Depth Rail Joints, and Wing & Rail Bar Lists, see Plans.

For location of drain openings, see Plans. Drain openings shown are not applicable for bridges with sidewalks. Drain openings will not be allowed over Railroad Right of Way, travelled roadways, and protected waterways.

Rail Terminus details, including Rail Taper, are not applicable for bridges with sidewalks or when bridge railing is continuous with roadway railing.

Scales shown are for 22"x34" drawings. When using 11"x17" drawings, reduce scale by one half.

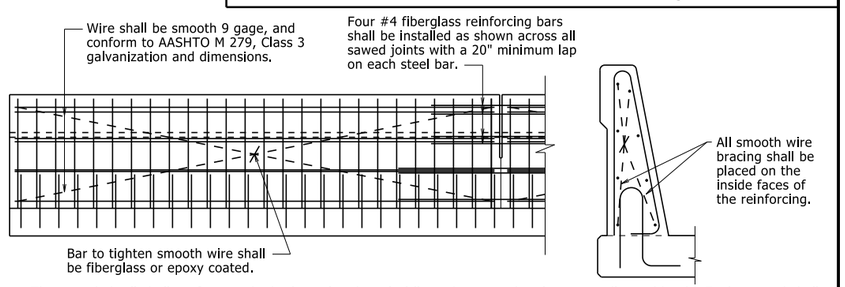

The extruded rail shall conform to the horizontal and vertical lines shown on the plans or as directed by the Engineer and shall present a smooth, uniform appearance and texture. Unless otherwise noted, exposed surfaces may be given a light brush finish or a Class 3, Textured Coating Finish in place of Class 2, Rubbed Finish.

All panels shall be braced as required to prevent racking.

Slip forming will not be allowed on bridges where formliner with architectural treatment is used unless approval from the Engineer is obtained.

DETAILS OF OPTIONAL SLIP FORMING OF BRIDGE TRAFFIC RAIL

No Scale

△1 Modified bending diagram and spacing for R401E bar.

By: CGP, Checked by: CMW 09/27/2022

This document was originally issued and sealed by Charles R. Ellis, PE No. 9235, on November 5, 2020. This copy is not a signed and sealed document.

STATE OF ARKANSAS
LICENSED PROFESSIONAL ENGINEER
No. 9235
CHARLES R. ELLIS

BRIDGE ENGINEER

THESE DETAILS ARE APPLICABLE UNLESS OTHERWISE SHOWN IN THE PLAN DETAILS, SPECIAL PROVISIONS, OR SUPPLEMENTAL SPECIFICATIONS.

STANDARD DETAILS FOR BRIDGE TRAFFIC RAIL TYPE SSTR36

ARKANSAS STATE HIGHWAY COMMISSION

LITTLE ROCK, ARK.

DRAWN BY: KWY DATE: 11/5/2020
CHECKED BY: LJB DATE: 11/5/2020
DESIGNED BY: STD. DATE: -----
FILENAME: b55070.dgn
SCALE: As Noted

DRAWING NO. 55070

PRINT DATE: 10/6/2022

DATE REVISED	DATE FILMED	DATE REVISED	DATE FILMED	FED. ROAD DIST. NO.	STATE	FED. AID PROJ. NO.	SHEET NO.	TOTAL SHEETS
5-24-17				6	ARK.			
				JOB NO.				

① 25' PRECAST SPAN - 55081

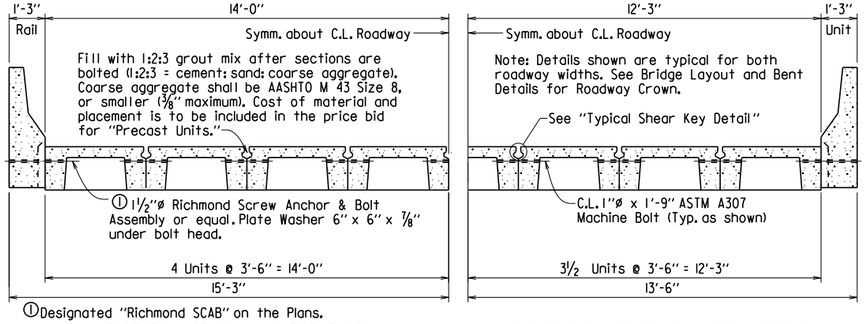

①Designated "Richmond SCAB" on the Plans.

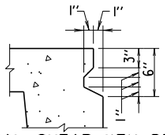

TYPICAL SHEAR KEY DETAIL

No Scale

Note: All corners exposed after erection shall have a ½" minimum chamfer. All other corners shall have sufficient chamfer or rounding to prevent breakage during form removal, handling and erection.

BAR LIST FOR PRECAST BRIDGE COMPONENTS

PER PRECAST UNIT

MARK	NUMBER REQUIRED		LENGTH	P.D.
	CURB UNIT	INT. UNIT		
S301	106	106	3'-5½"	1½"
S302	4	4	2'-9"	1½"
S401	10	8	3'-2"	Str.
S501	26 ③	-	4'-8"	2½"
S1001	6	6	24'-8"	Str.

BENDING DIAGRAMS (Dimensions are out to out of bars)

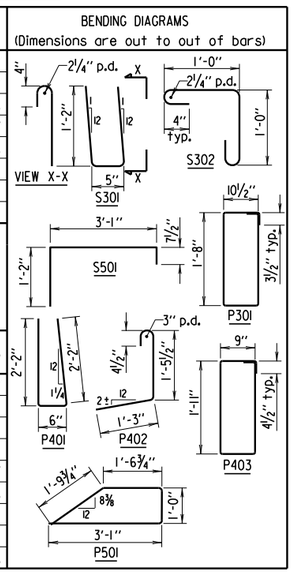

③ Plus 7 additional for each Drain Slot eliminated

PER PRECAST PARAPET RAIL

MARK	NUMBER REQUIRED		LENGTH	P.D.
	END SPAN	INT. SPAN		
P301	See Std. Dwg. No. 55083	8	5'-4"	1½"
P401		45	4'-8"	2"
P402		27	3'-1½"	2"
P403		27	5'-8"	2"
P501		18	7'-2"	2½"
P502		9	24'-8"	Str.
P901		2	24'-8"	Str.

TYPICAL SECTION OF PRECAST RDWY. (SHOWING ASSEMBLY)

HALF-SECTION OF 28'-0" CLEAR ROADWAY — HALF-SECTION OF 24'-6" CLEAR ROADWAY

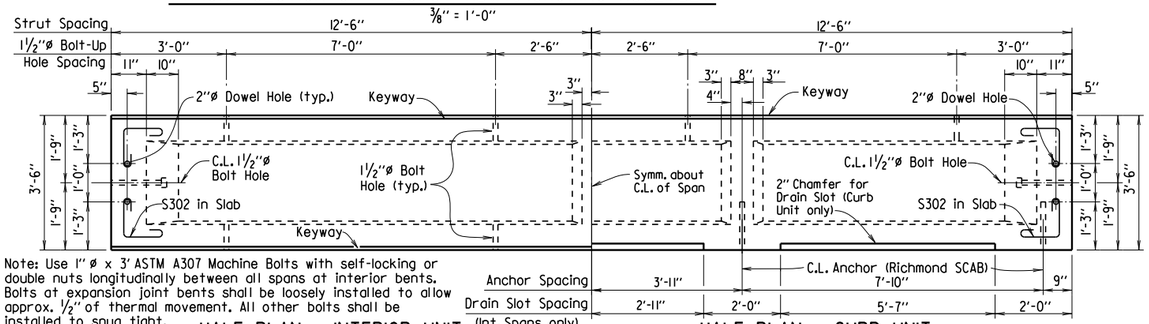

Note: Use 1" ø x 3' ASTM A307 Machine Bolts with self-locking or double nuts longitudinally between all spans at interior bents. Bolts at expansion joint bents shall be loosely installed to allow approx. ½" of thermal movement. All other bolts shall be installed to snug tight.

HALF PLAN - INTERIOR UNIT

½" = 1'-0"

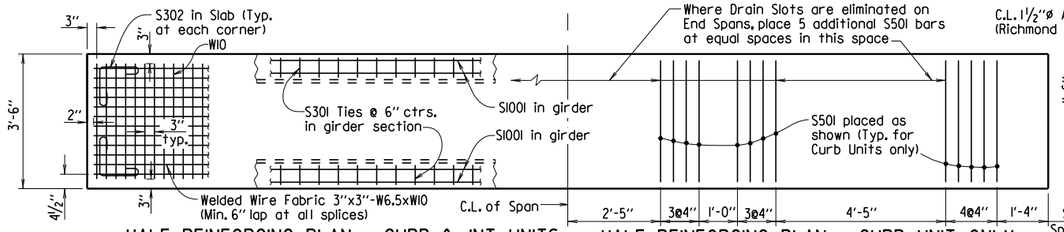

HALF REINFORCING PLAN - CURB & INT. UNITS

½" = 1'-0"

HALF PLAN - CURB UNIT

½" = 1'-0"

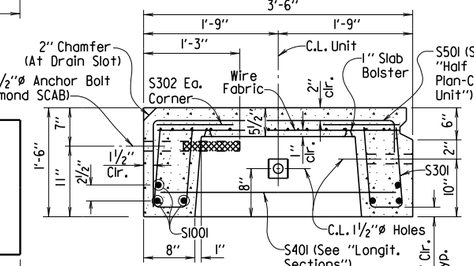

HALF REINFORCING PLAN - CURB UNIT ONLY

½" = 1'-0"

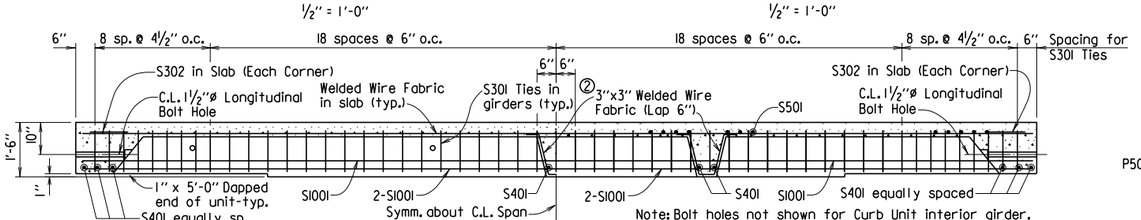

Note: Bolt holes not shown for Curb Unit interior girder.

② 5 - No. 3 Stirrups @ 6" ctrs. may be used in place of wire fabric in strut.

HALF LONGIT. SECTION - INTERIOR UNIT

½" = 1'-0"

HALF LONGIT. SECTION - CURB UNIT

½" = 1'-0"

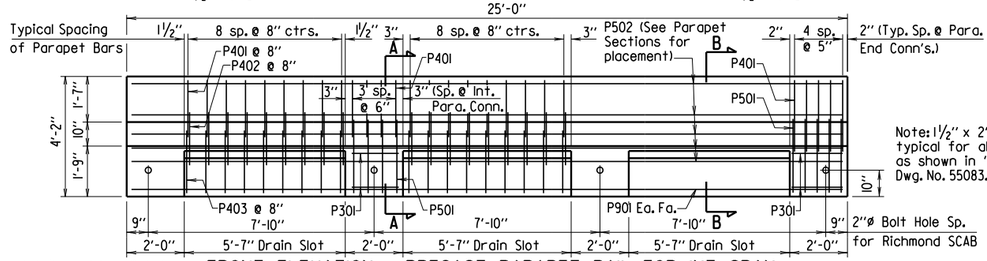

Note: For details and bar list for Precast Parapet Rail at End Span, see Std. Dwg. No. 55083.

FRONT ELEVATION - PRECAST PARAPET RAIL FOR INT. SPAN

⅜" = 1'-0"

SECTION THRU CURB UNIT

(Shown near midspan)
1" = 1'-0"

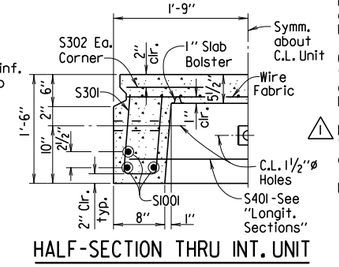

HALF-SECTION THRU INT. UNIT

(Shown near midspan)
1" = 1'-0"

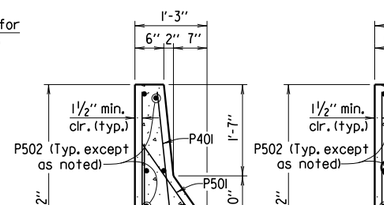

SECTION A-A

(Shown near midspan)
¾" = 1'-0"

SECTION B-B

(Shown near midspan)
¾" = 1'-0"

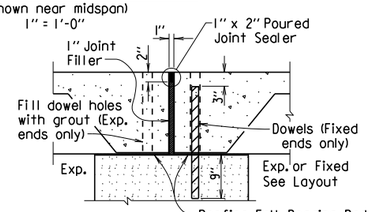

Note: Expansion Joints to be placed at approximately 155' max. spacings.

SECTION AT EXP. JOINT

¾" = 1'-0"

Note: 1" Expansion Joint shall consist of 1" Joint Filler topped with 1" x 2" Poured Joint Sealer. Joint Filler shall be AASHTO M 153, Type I. Poured Joint Sealer shall meet Subsection 501.02(h) (2), Type 3 or 4.

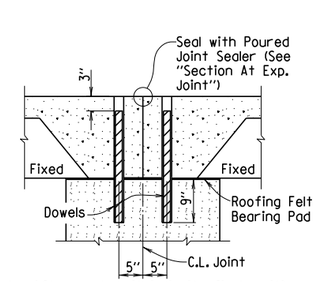

Note: After each unit is in its final position, dowels shall be grouted in place using a QPL approved non-shrink grout that completely fills the holes. See bent drawings for more information.

SECTION AT FIXED BENT

¾" = 1'-0"

GENERAL NOTES

Design Specifications: AASHTO LRFD Bridge Design Specifications, Seventh Edition (2014).

Unless otherwise noted, Section and Subsection refer to the Standard Construction Specifications.

Live Loading: HL-93

Materials: 28 Day compressive strength of Concrete = 4,000 psi
Yield strength of Grade 60 Steel = 60,000 psi
Yield strength of Wire Fabric = 65,000 psi

All Reinforcing steel shall be Grade 60, AASHTO M 31 or M 322, Type A with mill test reports. Wire fabric shall be AASHTO M 55 or M 221. Reinforcing steel and wire fabric shall be accurately located in the forms and securely held in place by steel wire supports.

Concrete for precast units shall be Class S(AE) except that the coarse aggregate size shall meet AASHTO M 43, Size 67 (¾" Max.).

The deck shall be given a tine finish as specified for Class 5 Roadway Surface Finish in Subsection 802.19.

Standard washers shall be provided under head and nut of all bolts in connection with concrete. Bolts shall be A307. All bolts, washers and nuts shall be galvanized to meet AASHTO M 232, Class C or ASTM B695, Class 50.

Screw Anchor and Bolt Assembly (SCAB) shall be 1½"ø Richmond Screw Anchor or equal, and have a minimum ultimate strength of 65,000 psi in tension. Assembly shall be galvanized to meet AASHTO M 232, Class C or ASTM B695, Class 50. Plate Washers for SCAB shall be AASHTO M 270, Grade 36 and shall be galvanized to meet AASHTO M 111.

Camber required for dead load deflection is ¼". Deviation of more than ¼" in dimension of grade or line will be cause for rejection.

Ends of adjacent units shall be coated (1/16" +/-) with asphaltic paint. The coating shall adhere and set firm and its softening point shall not be less than 140°F.

Concrete, reinforcing, wire mesh, bar supports, bolts, nuts, washers, threaded anchors, grout, roofing felt bearing pad, asphaltic paint and expansion joint fillers are considered subsidiary to the pay items for Precast Concrete Units.

⚠1 Roofing felt shall meet or exceed the requirements of ASTM D6380 Class S Type IV. The roofing felt shall be in one piece for the full length of the cap and three layers shall be used.

Pay Items shall be as follows:
"25' Precast Concrete Curb Units"
"25' Precast Concrete Interior Units"
"25' Precast Parapet Rail Units"

⚠1 Revised Roofing Felt specification and note 5-24-17 PGT Checked By: KWY

This document was originally issued and sealed by Charles R. Ellis, PE No. 9235, on February 25, 2016. This copy is not a signed and sealed document.

STATE OF ARKANSAS
REGISTERED PROFESSIONAL ENGINEER
No. 9235
CHARLES R. ELLIS
BRIDGE ENGINEER

STANDARD DETAILS FOR 25'-0" PRECAST CONCRETE SPANS 28'-0" AND 24'-6" CLEAR ROADWAYS

ARKANSAS STATE HIGHWAY COMMISSION

LITTLE ROCK, ARK.

DRAWN BY: KDH DATE: 1-22-15
CHECKED BY: KWY DATE: 2-4-16
DESIGNED BY: STD. DATE:
FILENAME: b5508Ldgn
SCALE: AS NOTED

DRAWING NO. 55081

PRINT DATE: 11/7/2019

DATE REVISED	DATE FILMED	DATE REVISED	DATE FILMED	FED. ROAD DIST. NO.	STATE	FED. AID PROJ. NO.	SHEET NO.	TOTAL SHEETS
5-24-17				6	ARK.			
				JOB NO.				
				①	31' PRECAST SPAN - 55082			

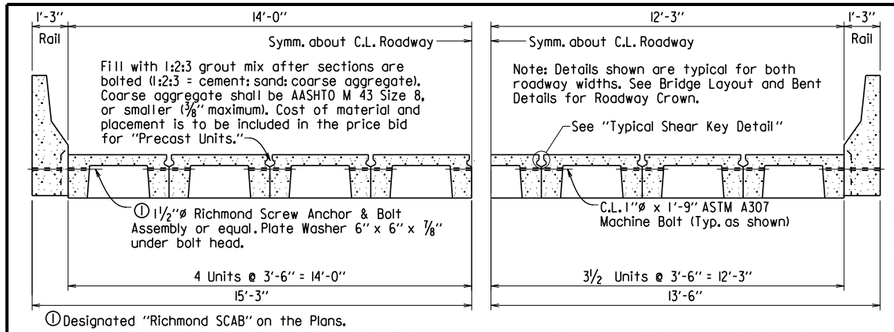

① Designated "Richmond SCAB" on the Plans.

HALF-SECTION OF 28'-0" CLEAR ROADWAY

HALF-SECTION OF 24'-6" CLEAR ROADWAY

TYPICAL SECTION OF PRECAST RDWY. (SHOWING ASSEMBLY)

⅜" = 1'-0"

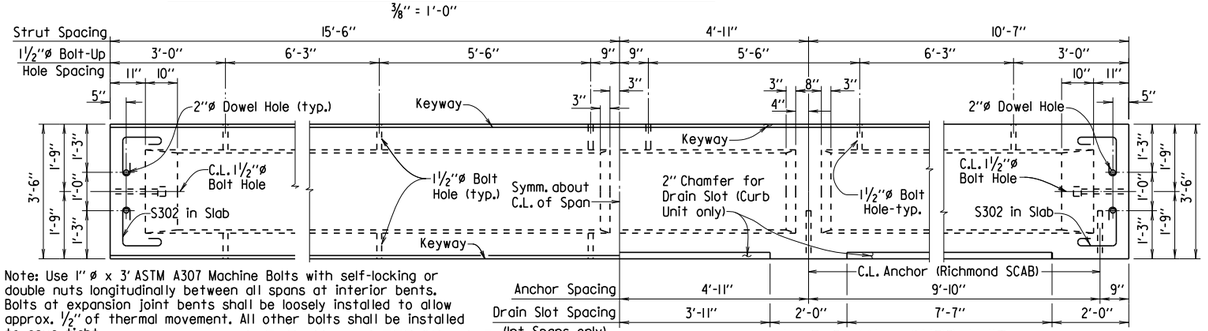

Note: Use 1" ø x 3' ASTM A307 Machine Bolts with self-locking or double nuts longitudinally between all spans at interior bents. Bolts at expansion joint bents shall be loosely installed to allow approx. ½" of thermal movement. All other bolts shall be installed to snug tight.

HALF PLAN - INTERIOR UNIT

½" = 1'-0"

HALF PLAN - CURB UNIT

½" = 1'-0"

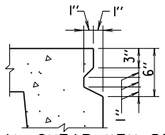

TYPICAL SHEAR KEY DETAIL

No Scale

Note: All corners exposed after erection shall have a ½" minimum chamfer. All other corners shall have sufficient chamfer or rounding to prevent breakage during form removal, handling and erection.

BAR LIST FOR PRECAST BRIDGE COMPONENTS

PER PRECAST UNIT

MARK	NUMBER REQUIRED CURB UNIT	NUMBER REQUIRED INT. UNIT	LENGTH	P.D.
S301	130	130	3'-5½"	1½"
S302	4	4	2'-9"	1½"
S401	10	8	3'-2"	Str.
S501	26 ③	-	4'-8"	2½"
S1001	8	8	30'-8"	Str.

③ Plus 7 additional for each Drain Slot eliminated

BENDING DIAGRAMS (Dimensions are out to out of bars)

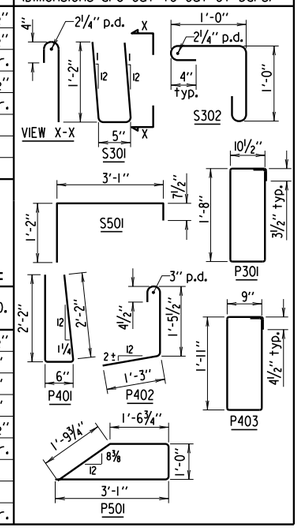

PER PRECAST PARAPET RAIL

MARK	NUMBER REQUIRED END SPAN	NUMBER REQUIRED INT. SPAN	LENGTH	P.D.
P301	See Std. Dwg. No. 55083	8	5'-4"	1½"
P401		54	4'-8"	2"
P402		36	3'-1½"	2"
P403		36	5'-8"	2"
P501		18	7'-2"	2½"
P502		9	30'-8"	Str.
P1001		2	30'-8"	Str.

GENERAL NOTES

Design Specifications: AASHTO LRFD Bridge Design Specifications, Seventh Edition (2014).

Unless otherwise noted, Section and Subsection refer to the Standard Construction Specifications.

Live Loading: HL-93

Materials: 28 Day compressive strength of Concrete = 4,000 psi
Yield strength of Grade 60 Steel = 60,000 psi
Yield strength of Wire Fabric = 65,000 psi

All Reinforcing steel shall be Grade 60, AASHTO M 31 or M 322, Type A with mill test reports. Wire fabric shall be AASHTO M 55 or M 221. Reinforcing steel and wire fabric shall be accurately located in the forms and securely held in place by steel wire supports.

Concrete for precast units shall be Class S(AE) except that the coarse aggregate size shall meet AASHTO M 43, Size 67 (¾" Max.).

The deck shall be given a tine finish as specified for Class 5 Roadway Surface Finish in Subsection 802.19.

Standard washers shall be provided under head and nut of all bolts in connection with concrete. Bolts shall be A307. All bolts, washers and nuts shall be galvanized to meet AASHTO M 232, Class C or ASTM B695, Class 50.

Screw Anchor and Bolt Assembly (SCAB) shall be 1½"ø Richmond Screw Anchor or equal, and have a minimum ultimate strength of 65,000 psi in tension. Assembly shall be galvanized to meet AASHTO M 232, Class C or ASTM B695, Class 50. Plate Washers for SCAB shall be AASHTO M 270, Grade 36 and shall be galvanized to meet AASHTO M 111.

Camber required for dead load deflection is ⅜". Deviation of more than ¼" in dimension of grade or line will be cause for rejection.

Ends of adjacent units shall be coated (1/16" +/-) with asphaltic paint. The coating shall adhere and set firm and its softening point shall not be less than 140°F.

Concrete, reinforcing, wire mesh, bar supports, bolts, nuts, washers, threaded anchors, grout, roofing felt bearing pad, asphaltic paint and expansion joint fillers are considered subsidiary to the pay items for Precast Concrete Units.

⚠ Roofing felt shall meet or exceed the requirements of ASTM D6380 Class S Type IV. The roofing felt shall be in one piece for the full length of the cap and three layers shall be used.

Pay Items shall be as follows:
"31' Precast Concrete Curb Units"
"31' Precast Concrete Interior Units"
"31' Precast Parapet Rail Units"

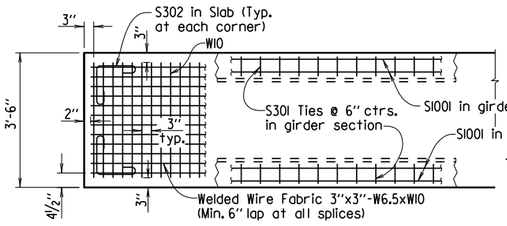

HALF REINFORCING PLAN - CURB & INT. UNITS

½" = 1'-0"

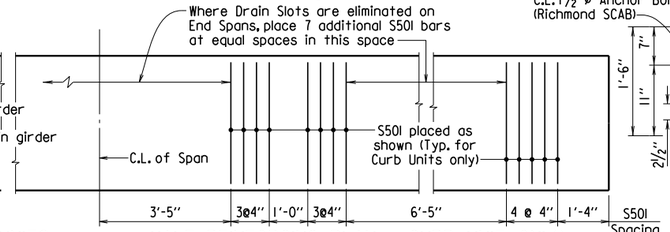

HALF REINFORCING PLAN - CURB UNIT ONLY

½" = 1'-0"

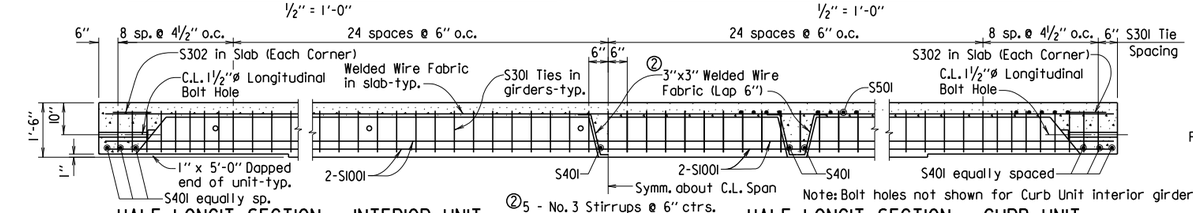

HALF LONGIT. SECTION - INTERIOR UNIT

½" = 1'-0"

② 5 - No. 3 Stirrups @ 6" ctrs. may be used in place of wire fabric in strut.

HALF LONGIT. SECTION - CURB UNIT

½" = 1'-0"

Note: Bolt holes not shown for Curb Unit interior girder.

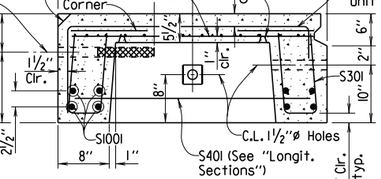

SECTION THRU CURB UNIT

(Shown near midspan)
1" = 1'-0"

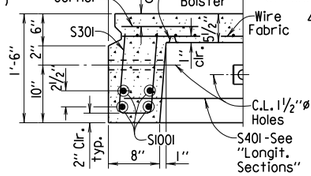

HALF-SECTION THRU INT. UNIT

(Shown near midspan)
1" = 1'-0"

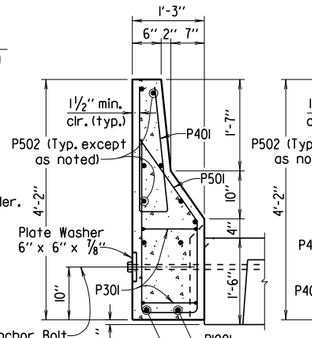

SECTION A-A

(Shown near midspan)
¾" = 1'-0"

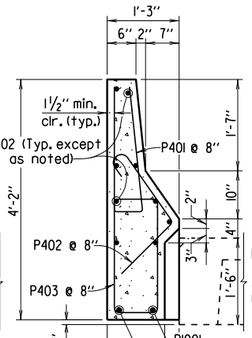

SECTION B-B

(Shown near midspan)
¾" = 1'-0"

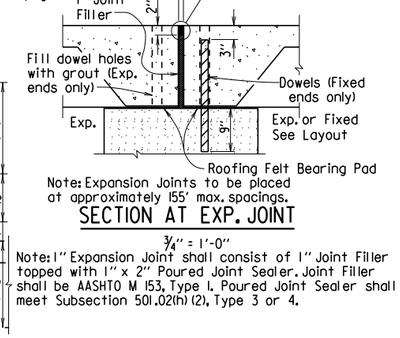

Note: Expansion Joints to be placed at approximately 155' max. spacings.

SECTION AT EXP. JOINT

¾" = 1'-0"

Note: 1" Expansion Joint shall consist of 1" Joint Filler topped with 1" x 2" Poured Joint Sealer. Joint Filler shall be AASHTO M 153, Type I. Poured Joint Sealer shall meet Subsection 501.02(h) (2), Type 3 or 4.

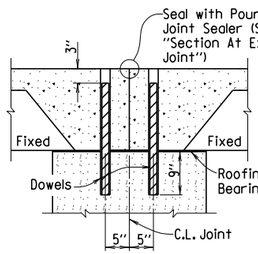

Note: After each unit is in its final position, dowels shall be grouted in place using a QPL approved non-shrink grout that completely fills the holes. See bent drawings for more information.

SECTION AT FIXED BENT

¾" = 1'-0"

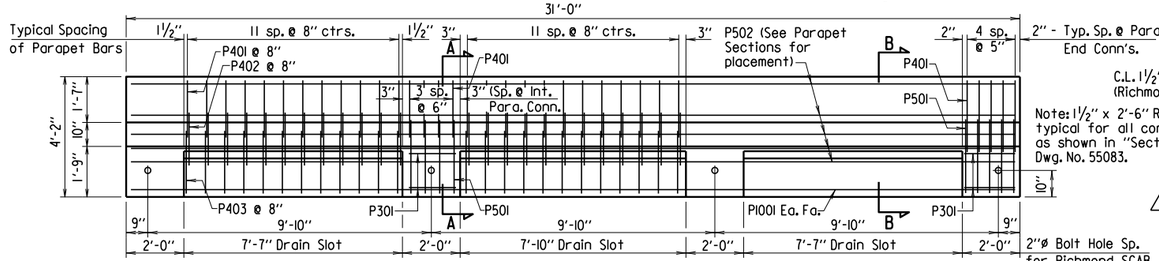

Note: For details and bar list for Precast Parapet Rail at End Span, see Std. Dwg. No. 55083.

FRONT ELEVATION - PRECAST PARAPET RAIL FOR INT. SPAN

⅜" = 1'-0"

Note: 1½" x 2'-6" Richmond SCAB typical for all connections except as shown in "Section A-A", Std. Dwg. No. 55083.

⚠ Revised Roofing Felt specification and note 5-24-17 PGT Checked By: KWY

This document was originally issued and sealed by Charles R. Ellis, PE No. 9235, on February 25, 2016. This copy is not a signed and sealed document.

STATE OF ARKANSAS
REGISTERED PROFESSIONAL ENGINEER
No. 9235
CHARLES R. ELLIS

BRIDGE ENGINEER

STANDARD DETAILS FOR 31'-0" PRECAST CONCRETE SPANS 28'-0" AND 24'-6" CLEAR ROADWAYS

ARKANSAS STATE HIGHWAY COMMISSION

DRAWN BY:	KDH	DATE:	1-20-15	FILENAME:	b55082.dgn
CHECKED BY:	KWY	DATE:	2-4-16	SCALE:	AS NOTED
DESIGNED BY:	STD.	DATE:			

DRAWING NO. 55082

PRINT DATE: 3/21/2021

DATE REVISED	DATE FILMED	DATE REVISED	DATE FILMED	FED. ROAD DIST. NO.	STATE	FED. AID PROJ. NO.	SHEET NO.	TOTAL SHEETS
				6	ARK.			
				JOB NO.				
				①	PRECAST RAIL DETAILS - 55083			

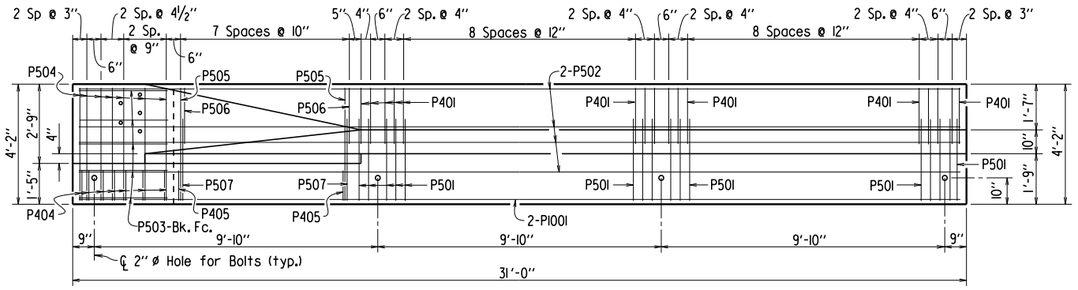

FRONT ELEVATION - PRECAST PARAPET RAIL FOR 31'-0" END SPAN

3/8" = 1'-0"

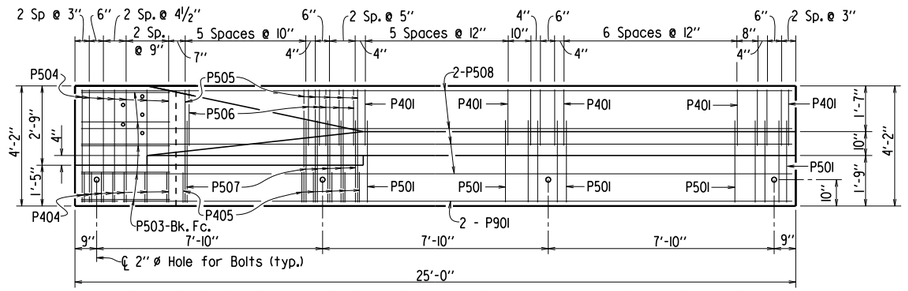

FRONT ELEVATION - PRECAST PARAPET RAIL FOR 25'-0" END SPAN

3/8" = 1'-0"

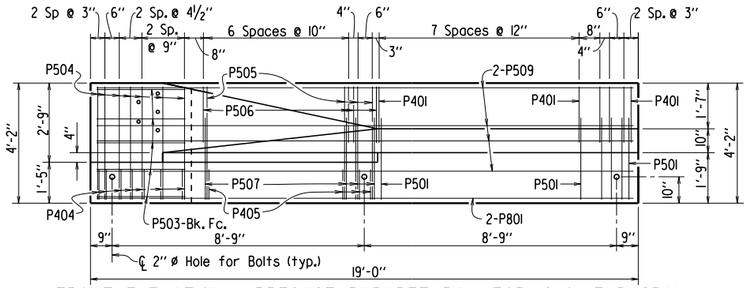

FRONT ELEVATION - PRECAST PARAPET RAIL FOR 19-0" END SPAN

3/8" = 1'-0"

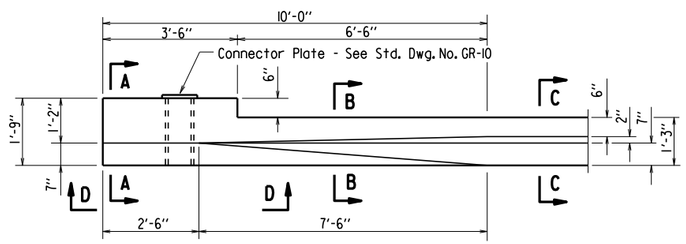

TYPICAL PLAN OF PRECAST PARAPET RAIL FOR END SPAN

1/2" = 1'-0"

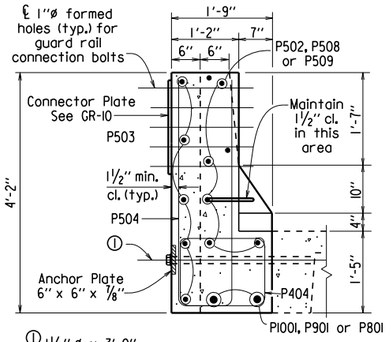

① 1½" ø x 3'-0" Richmond SCAB or equal required at End Post Connections only.

SECTION A-A

¾" = 1'-0"

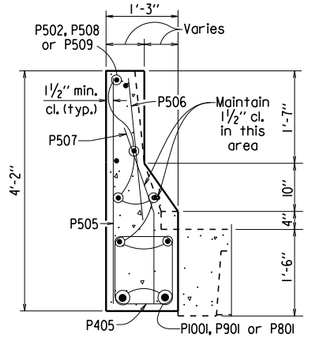

SECTION B-B

(Shown near midspan)

¾" = 1'-0"

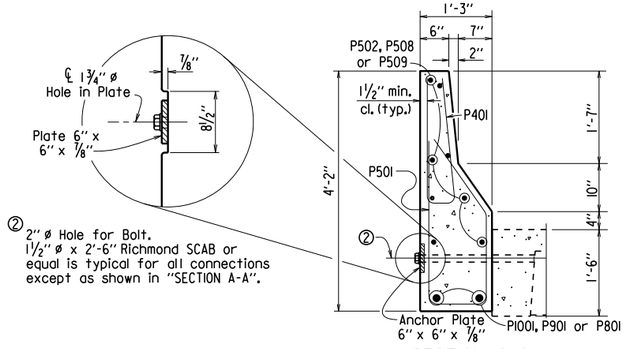

② 2" ø Hole for Bolt. 1½" ø x 2'-6" Richmond SCAB or equal is typical for all connections except as shown in "SECTION A-A".

SECTION C-C

(Shown near midspan)

¾" = 1'-0"

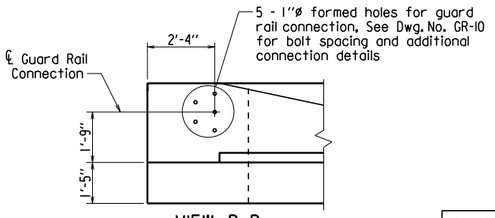

VIEW D-D

⅜" = 1'-0"

BAR LIST - PER END SPAN PARAPET RAIL

MARK	NUMBER REQUIRED 19'-0" RAIL	25'-0" RAIL	31'-0" RAIL	LENGTH	PIN DIA.
P401	12	20	30	4'-8"	2"
P404	7	7	7	5'-8"	2"
P405	9	10	8	4'-8"	2"
P501	12	20	30	7'-3"	2½"
P502			8	30'-8"	Str.
P503	5	5	5	3'-3"	Str.
P504	7	7	7	8'-6"	2½"
P505	9	10	8	3'-11"	Str.
P506	9	10	8	2'-2"	Str.
P507	9	10	8	2'-10"	2½"
P508		8		24'-8"	Str.
P509	8			18'-8"	Str.
P801	2			18'-8"	Str.
P901		2		24'-8"	Str.
P1001			2	30'-8"	Str.

BENDING DIAGRAMS

Dimensions are out to out of bars.

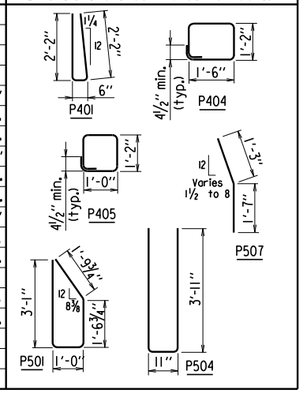

NOTE: This drawing is to be used with Dwg. No. 55080, 55081 and/or 55082 of which all three contain details and general notes pertaining to this drawing.

This document was originally issued and sealed by Charles R. Ellis, PE No. 9235, on February 25, 2016. This copy is not a signed and sealed document.

STATE OF ARKANSAS
REGISTERED PROFESSIONAL ENGINEER
No. 9235
CHARLES R. ELLIS

BRIDGE ENGINEER

STANDARD DETAILS FOR PRECAST PARAPET RAILS 19'-0", 25'-0" AND 31'-0" PRECAST END SPANS

ARKANSAS STATE HIGHWAY COMMISSION

LITTLE ROCK, ARK.

DRAWN BY:	KDH	DATE:	1-26-15	FILENAME:	b55083.dgn
CHECKED BY:	KWY	DATE:	2-4-16	SCALE:	AS NOTED
DESIGNED BY:	STD.	DATE:			

DRAWING NO. 55083

PRINT DATE: 11/7/2019

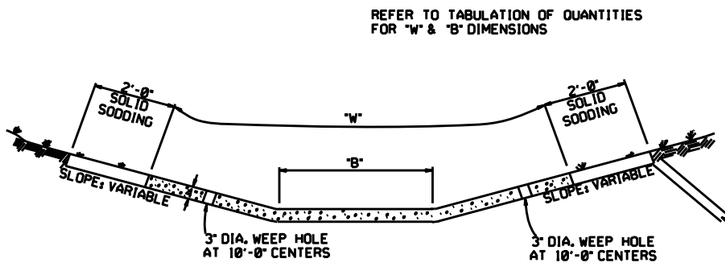

TYPE A

EXCAVATE TO NEAT LINES TO CONSTRUCT DITCH PAVING AND SOLID SODDING.

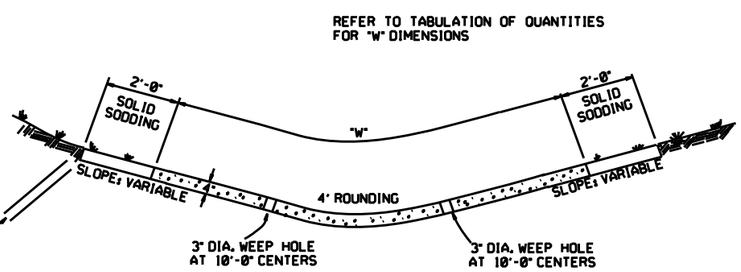

TYPE B

THE STEEL AND ADDITIONAL CONCRETE FOR THE WALLS SHALL NOT BE PAID FOR DIRECTLY, BUT SHALL BE CONSIDERED TO BE INCLUDED IN THE PRICE BID FOR "CONCRETE DITCH PAVING."

TOE WALL DEPTH MAY BE ALTERED TO 1'-0" WHEN DIRECTED BY THE ENGINEER IN ROCK EXCAVATION

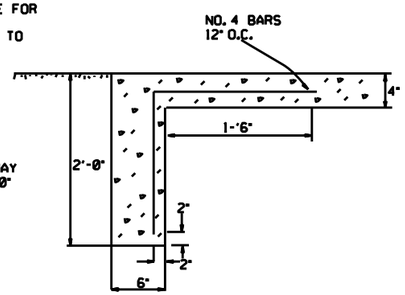

TOE WALL DETAIL FOR CONCRETE DITCH PAVING

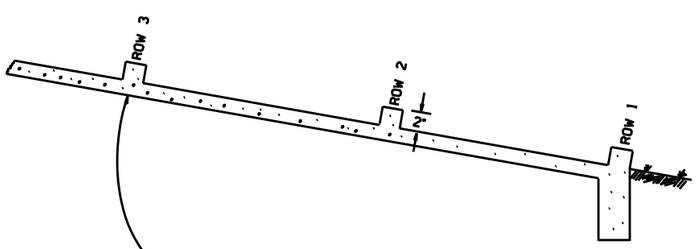

NUMBER OF ELEMENTS PER ROW VARIES WITH WIDTH OF PAVING SPECIFIED

ENERGY DISSIPATORS TO BE USED FOR THE ENTIRE LENGTH OF DITCH WHEN SLOPE OF DITCH PAVING EXCEEDS 7%. THE DISSIPATORS WILL NOT BE PAID FOR DIRECTLY, BUT SHALL BE CONSIDERED TO BE INCLUDED IN THE PRICE BID FOR CONCRETE DITCH PAVING.

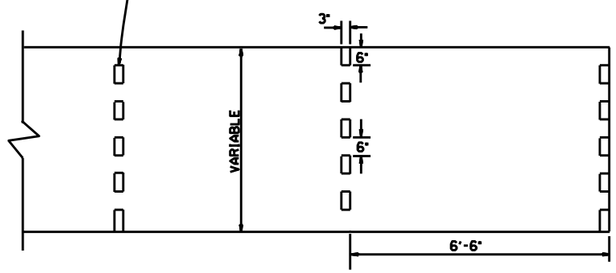

ENERGY DISSIPATORS
(NO SCALE)

GENERAL NOTES:

THE FULL WIDTH OF EACH SECTION SHALL BE POURED MONOLITHICALLY.

TOE WALLS TO BE CONSTRUCTED FULL WIDTH AT EACH END OF DITCH PAVING, AND POURED MONOLITHICALLY.

SOLID SOD ALONG DITCH PAVING TO BE PLACED WITHIN 14 DAYS OF DITCH PAVING CONSTRUCTION.

1" WIDE TRANSVERSE EXPANSION JOINTS SHALL BE PLACED IN CONCRETE DITCH PAVING AT 45° INTERVALS. THE SPACE SHALL BE FILLED WITH APPROVED JOINT FILLER COMPLYING WITH AASHTO M213.

DATE	REVISION	DATE FILM'D
12-8-16	CORRECTED ENERGY DISSIPATOR DRAWING AND NOTE	
11-17-10	ADDED GENERAL NOTE	
6-2-94	ADDED GENERAL NOTE ABOUT SOLID SODDING	
11-30-8	ELIMINATED MIN. ROWS OF ELEMENTS	111-30-89
7-15-88	REVISED DISSIPATOR NOTE	653-7-15-88
4-3-87	REVISED ENERGY DISSIPATOR	671-4-3-87
1-9-87	MODIFIED NOTE ON ENERGY DISS.	532-1-9-87
11-3-86	ADDED NOTE TO ENERGY DISS.	599-12-1-86
11-1-84	ENERGY DISSIPATOR DETAILS ADDED	508-11-1-84
11-1-84	EXCAVATION DETAILS ADDED TYPED A & B	
10-2-72	REVISED AND REDRAWN	508-10-2-72

ARKANSAS STATE HIGHWAY COMMISSION

CONCRETE DITCH PAVING

STANDARD DRAWING CDP-1

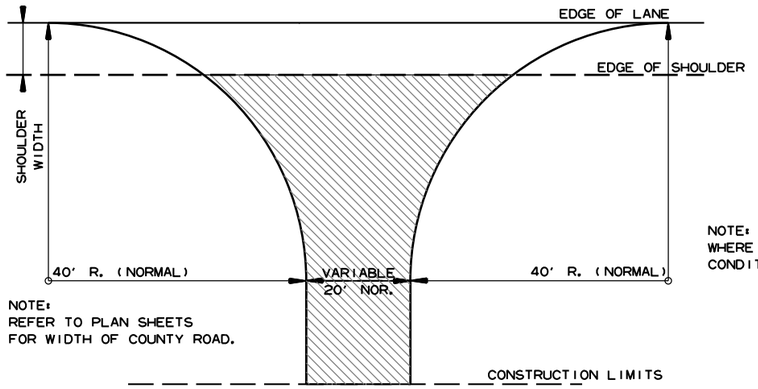

NOTE:
REFER TO PLAN SHEETS
FOR WIDTH OF COUNTY ROAD.

NOTE: TURNOUTS SHALL BE MODIFIED WHERE NECESSARY TO MEET LOCAL CONDITIONS AS DIRECTED BY THE ENGINEER.

ACHM SURFACE COURSE (1/2")
(220 LBS. PER SQ. YD.) AND
AGGREGATE BASE COURSE (CLASS 7)
7" COMP. DEPTH, UNLESS OTHERWISE
SPECIFIED IN PLANS.

DETAIL FOR COUNTY ROAD TURNOUTS OPEN SHOULDER SECTION

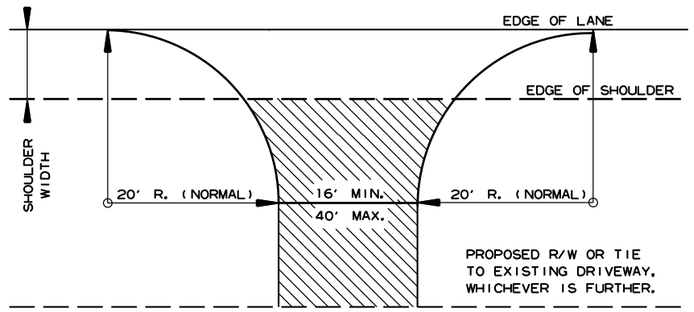

NOTE: TURNOUTS AND PRIVATE DRIVES SHALL BE MODIFIED WHERE NECESSARY TO MEET LOCAL CONDITIONS AS DIRECTED BY THE ENGINEER.

ACHM SURFACE COURSE (1/2")
(220 LBS. PER SQ. YD.) AND
AGGREGATE BASE COURSE (CLASS 7)
7" COMP. DEPTH IF ASPHALT OR
GRAVEL DRIVE EXISTING; OR 6"
CONCRETE IF CONCRETE DRIVE
EXISTING.

DETAIL FOR DRIVEWAY TURNOUTS OPEN SHOULDER SECTION (ARTERIALS)

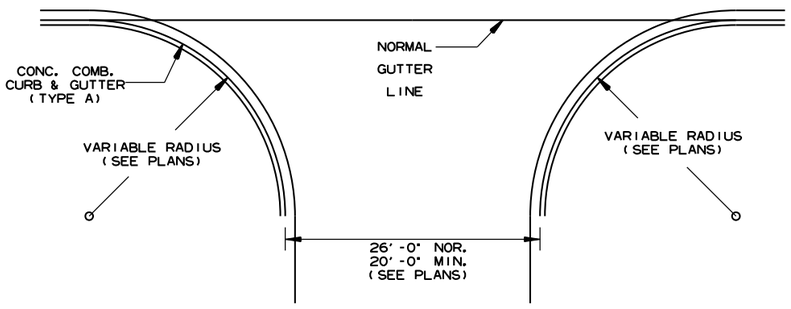

NOTE:
PAVEMENT STRUCTURE FOR STATE HIGHWAYS, CITY STREETS,
& COUNTY ROADS TO BE SAME AS MAIN LANES.

DETAIL OF TURNOUTS, ASPHALT STREETS, COUNTY ROADS & STATE HIGHWAYS CURB & GUTTER SECTION

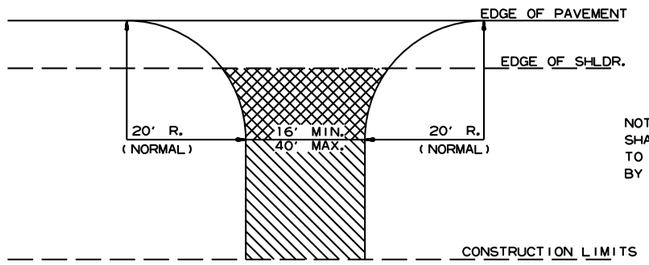

NOTE: TURNOUTS AND PRIVATE DRIVES SHALL BE MODIFIED WHERE NECESSARY TO MEET LOCAL CONDITIONS AS DIRECTED BY THE ENGINEER.

ASPHALT CONCRETE HOT MIX SURFACE
COURSE (220 LBS. PER SQ. YD.)
AGGREGATE BASE COURSE (CLASS 7)
7" COMP. DEPTH IF ASPHALT DRIVE EXIST OR
6" CONCRETE IF CONCRETE DRIVE EXIST.

AGGREGATE BASE COURSE (CLASS 7)
9" COMP. DEPTH OR CONFORM
TO EXISTING DRIVEWAY

DETAIL FOR DRIVEWAY TURNOUTS (COLLECTORS)

DATE REV	DATE FILMED	DESCRIPTION
5-19-22		ISSUED

ARKANSAS STATE HIGHWAY COMMISSION

DETAILS OF DRIVEWAYS & STREET TURNOUTS

STANDARD DRAWING DR-2

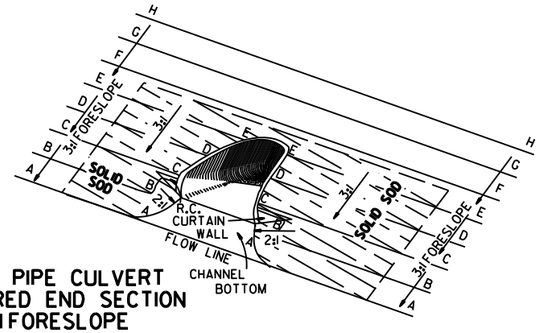

TYPICAL PIPE CULVERT
WITH FLARED END SECTION
& 3:1 FORESLOPE

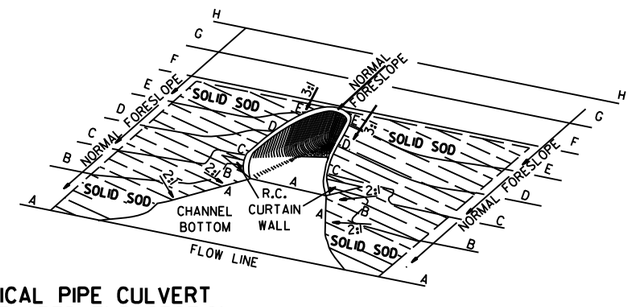

TYPICAL PIPE CULVERT
WITH FLARED END SECTION
& FLATTENED ADJACENT SLOPES

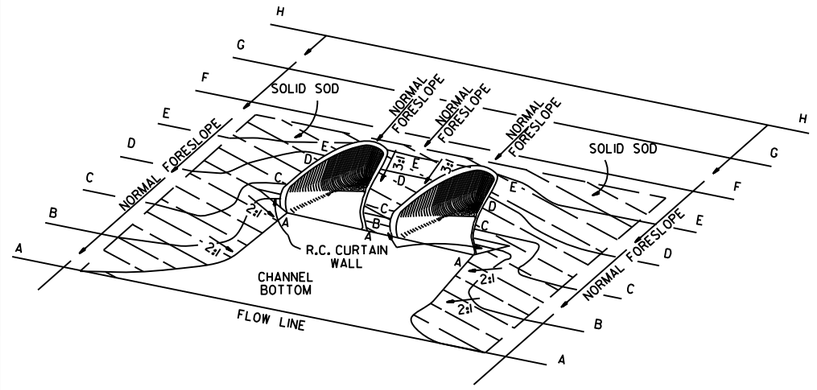

TYPICAL MULTIPLE PIPE CULVERT
WITH FLARED END SECTIONS
& FLATTENED ADJACENT SLOPES

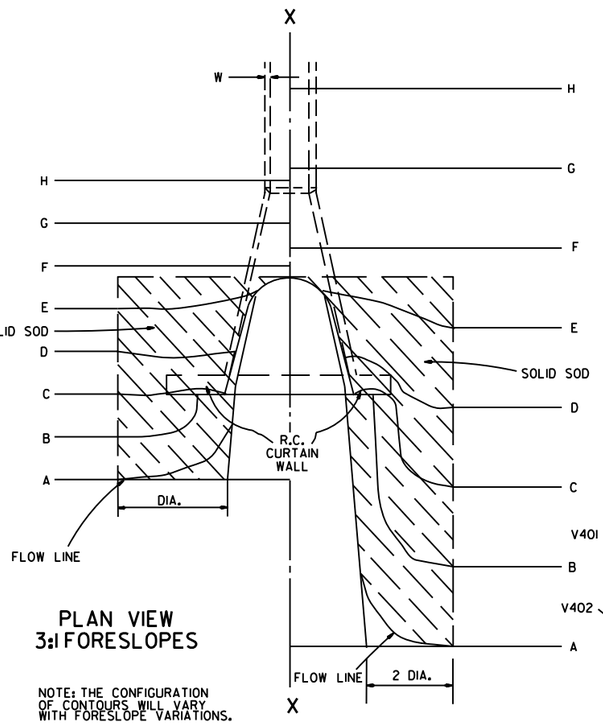

PLAN VIEW
3:1 FORESLOPES

NOTE: THE CONFIGURATION OF CONTOURS WILL VARY WITH FORESLOPE VARIATIONS.

PLAN VIEW
FLATTENED FORESLOPES

R.C. CURTAIN WALL
DIMENSIONS & QUANTITIES

PIPE DIA.	H_1	L_1	L	L (DBL.) / 2	SINGLE R.C.P.C. CONC.	SINGLE R.C.P.C. REINF. STEEL	DOUBLE R.C.P.C. CONC.	DOUBLE R.C.P.C. REINF. STEEL
					CU. YDS.	LBS.	CU. YDS.	LBS.
18"	1'-11½"	3'-5"	8'-0"	6'-3"	0.31	27.7	0.45	39.5
24"	1'-0½"	4'-6"	9'-6"	7'-6"	0.37	33.4	0.53	48.0
30"	1'-3½"	5'-7"	11'-0"	9'-0"	0.45	39.0	0.67	59.0
36"	1'-7"	6'-8"	13'-0"	10'-6"	0.58	52.6	0.83	73.9
42"	2'-1½"	7'-3"	15'-6"	12'-0"	0.82	77.1	1.10	100.7
48"	2'-5"	7'-10"	17'-0"	13'-0"	0.98	94.9	1.27	120.4
54"	2'-9½"	8'-5"	18'-6"	14'-0"	1.16	115.8	1.47	143.7
60"	3'-4"	9'-0"	20'-6"	15'-6"	1.47	149.7	1.84	180.3
72"	4'-5"	10'-2"	25'-6"	18'-6"	2.31	232.6	2.73	271.0

NOTE: QUANTITIES SHOWN ARE FOR ONE (1) CURTAIN WALL.

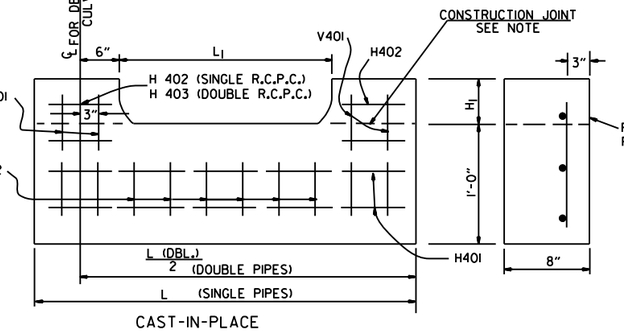

CAST-IN-PLACE

NOTE: THE PORTION OF THE R.C. CURTAIN WALL BENEATH THE FLARED END SECTION (LOWER 1'-0") SHALL BE PLACED MONOLITHICALLY. THE FLARED END SECTION SHALL THEN BE SET IN PLACE & THE REMAINING PORTIONS OF THE R.C. CURTAIN WALL PLACED.

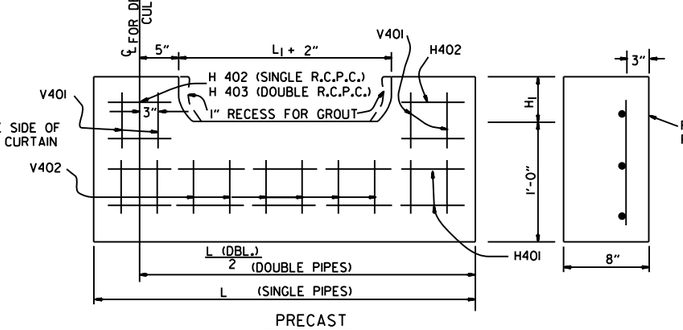

PRECAST

NOTE: THE PRECAST CURTAIN WALL WILL BE SET AND BACKFILLED WITH COMPACTED MATERIAL. THE FLARED END SECTION SHALL THEN BE SET IN PLACE AND THE 1" RECESS FILLED WITH GROUT. WHERE "L" EXCEEDS 11' THE CURTAIN WALL MAY BE CAST IN TWO (2) OR MORE SECTIONS. THE METHOD OF JOINING THE SECTIONS FOR INSTALLATION SHALL BE APPROVED BY THE ENGINEER.

R.C. CURTAIN WALL DETAILS

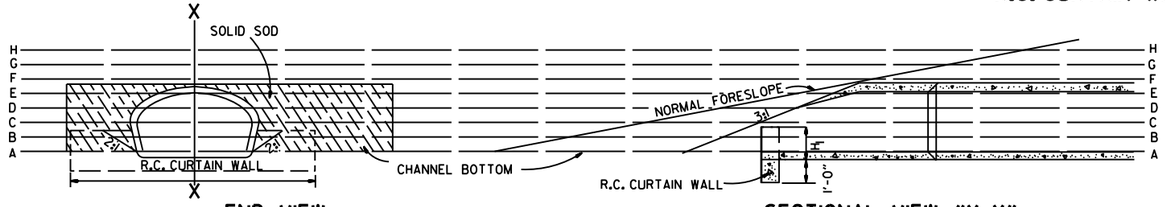

END VIEW

SECTIONAL VIEW "X-X"

REINFORCING STEEL SCHEDULE

PIPE DIA.	SINGLE R.C. PIPE CULVERT H401 L	H401 NO.	H402 L	H402 NO.	V401 L	V401 NO.	V402 L	V402 NO.	DOUBLE R.C. PIPE CULVERT H401 L	H401 NO.	H402 L	H402 NO.	H403 L	H403 NO.	V401 L	V401 NO.	V402 L	V402 NO.
18"	7'-8"	2	1'-11½"	4	1'-7½"	8	8"	8	12'-2"	2	1'-11½"	4	8"	2	1'-7½"	10	8"	14
24"	9'-2"	2	2'-2"	4	1'-8½"	10	8"	9	14'-8"	2	2'-2"	4	8"	2	1'-8½"	12	8"	18
30"	10'-8"	2	2'-4½"	4	1'-11½"	10	8"	12	17'-8"	2	2'-4½"	4	8"	2	1'-11½"	14	8"	22
36"	12'-8"	2	2'-10"	6	2'-3"	12	8"	14	20'-8"	2	2'-10"	6	8"	3	2'-3"	14	8"	28
42"	15'-2"	2	3'-9½"	8	2'-9½"	16	8"	15	23'-8"	2	3'-9½"	8	8"	4	2'-9½"	18	8"	30
48"	16'-8"	2	4'-3"	10	3'-1"	18	8"	16	25'-8"	2	4'-3"	10	8"	5	3'-1"	20	8"	32
54"	18'-2"	2	4'-8½"	12	3'-5½"	20	8"	17	27'-8"	2	4'-9"	12	8"	6	3'-5½"	22	8"	34
60"	20'-2"	2	5'-5"	14	4'-0"	24	8"	18	30'-8"	2	5'-5"	14	8"	7	4'-0"	26	8"	36
72"	25'-2"	2	7'-4"	18	5'-1"	30	8"	20	36'-8"	2	7'-4"	18	8"	9	5'-1"	33	8"	40

ALL REINFORCING STEEL #4 BARS @ 6" O.C.

SOLID SODDING

PIPE DIA.	SINGLE R.C.P.C. 3:1	4:1	6:1	DOUBLE R.C.P.C. 3:1	4:1	6:1
	SQ. YDS.			SQ. YDS.		
18"	5	7	12	6	8	13
24"	8	12	19	9	13	20
30"	13	18	29	14	19	30
36"	17	26	41	18	28	43
42"	23	35	55	25	37	57
48"	29	46	68	31	48	70
54"	35	57	85	37	59	87
60"	45	62	104	48	65	107
72"	64	92	156	67	95	159

NOTE: QUANTITIES SHOWN ABOVE ARE FOR ONE (1) END OF F.E.S.

GENERAL NOTES

1. A CAST-IN-PLACE OR PRECAST CURTAIN WALL MAY BE USED. PAYMENT FOR THE CURTAIN WALL SHALL BE CONSIDERED TO BE INCLUDED IN THE UNIT PRICE BID EACH FOR FLARED END SECTIONS OF THE SEVERAL SIZES, WHICH PRICE SHALL BE FULL COMPENSATION FOR FURNISHING ALL MATERIALS INCLUDING REINFORCING STEEL AND CONCRETE: FOR FORMS, MIXING AND PLACING; FOR EXCAVATION AND BACKFILL, AND FOR ALL LABOR, TOOLS, EQUIPMENT AND INCIDENTALS NECESSARY TO COMPLETE THE WORK.
2. ALL EXPOSED EDGES SHALL BE CHAMFERED ¾".
3. CONCRETE FOR CURTAIN WALL SHALL MEET THE REQUIREMENTS FOR CLASS A OR S CONCRETE AS PROVIDED IN SECTION 802 OF THE STANDARD SPECIFICATIONS OR FOR PAVING CONCRETE AS PROVIDED IN SECTION 501 OF THE STANDARD SPECIFICATIONS.
4. WELDED WIRE MESH 3 x 3 W10 x W10 MAY BE USED IN LIEU OF REINFORCING BARS.

DATE	REVISION	FILMED
10-18-96	ADDED NOTE TO SOLID SODDING	
10-12-95	CORRECTED SPELLING	
11- 3-94	ADDED GENERAL NOTE NO. 4	
8-15-91	REV. CURTAIN WALL QUANT. STEEL SCH. & SOLID SOD QUANT.	
3-2-81	ALLOW PRECAST IN 2 OR MORE PIECES CHAMFER EDGES	
5-15-80	ADDED PRECAST WALL & GENERAL NOTES	
10-2-72	REVISED AND REDRAWN	

ARKANSAS STATE HIGHWAY COMMISSION

FLARED END SECTION

STANDARD DRAWING FES-1

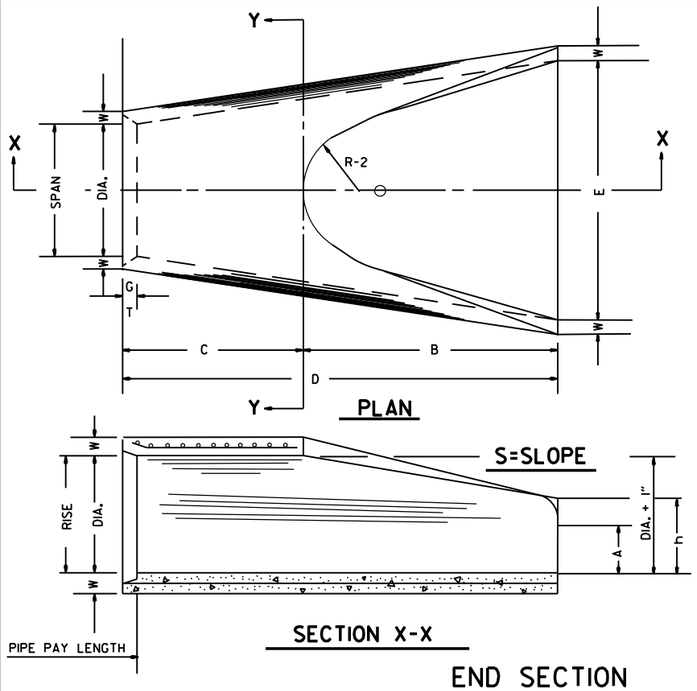

TABLE OF DIMENSIONS

DIA.	WALL	A	B	C	D	E	S	DIA. + 1"	P	R-1	R-2	G-T	WT.	h
18"	2½"	9"	2'-3"	3'-10"	6'-1"	3'-0"	3:1	19"	29"	15½"	12"	2"	1000	1'-0½"
24"	3"	9½"	3'-7½"	2'-6"	6'-1½"	4'-0"	3:1	25"	33 3/16"	16 15/16"	14"	2½"	1600	1'-1½"
30"	3½"	1'-0"	4'-6"	1'-7 3/4"	6'-1 3/4"	5'-0"	3:1	31"	37"	18½"	15"	3¼"	1940	1'-4 5/8"
36"	4"	1'-3"	5'-3"	2'-10 3/4"	8'-1 3/4"	6'-0"	3:1	37"	47 13/16"	24 5/16"	20"	3½"	4100	1'-8"
42"	4½"	1'-9"	5'-3"	2'-11"	8'-2"	6'-6"	3:1	43"	53⅞"	27½"	22"	3½"	5380	2'-2½"
48"	5"	2'-0"	6'-0"	2'-2"	8'-2"	7'-0"	3:1	49"	56½"	28½"	22"	3½"	6550	2'-6"
54"	5½"	2'-4"	6'-6"	1'-10"	8'-4"	7'-6"	3:1	55"	65½"	33⅛"	24"	4"	8750	2'-10½"
60"	6"	2'-10"	6'-6"	1'-10"	8'-4"	8'-0"	3:1	61"	72½"	36 11/16"	24"	4"	9270	3'-5"
72"	7"	3'-10"	6'-6"	1'-10"	8'-4"	9'-0"	3:1	73"	77 13/16"	38 15/16"	24"	5"	13250	4'-6"

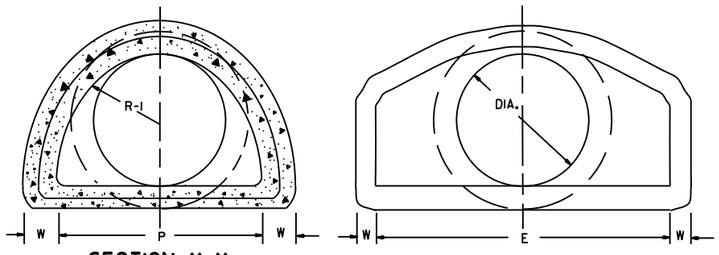

NOTE: TONGUE END ON UPSTREAM SECTION
GROOVE END ON DOWNSTREAM SECTION

ARCH PIPE

EQUIV. DIA.	• SPAN AASHTO M 206	• SPAN AHD NOMINAL	• RISE AASHTO M 206	• RISE AHD NOMINAL	W	A	B	C	D	E	P	R2	G-T	S
	INCHES													
15	18	18	11	11	2"	4"	2'-0"	4'-0"	6'-0"	3'-0"	29"	12"	1½"	2½:1
18	22	22	13½	14	2½"	5"	2'-0"	4'-1"	6'-1"	3'-6"	32⅛"	13"	2½"	2½:1
21	26	26	15½	16	2¾"	7"	2'-3"	3'-10"	6'-1"	4'-0"	34⅛"	14"	2½"	2½:1
24	28½	29	18	18	3"	9"	2'-3"	3'-10"	6'-1"	5'-0"	36 11/16"	15"	2½"	2½:1
30	36¼	36	22½	23	3½"	10"	3'-1"	3'-0½"	6'-1½"	6'-0"	47 11/16"	20"	3"	2½:1
36	43¾	44	26⅜	27	4"	10½"	4'-0"	2'-11½"	6'-1½"	6'-6"	54 5/16"	22"	3½"	2½:1
42	51⅛	51	31 5/16	31	4½"	11½"	4'-7"	1-10¼"	6'-5¼"	7'-2"	59½"	23"	3¾"	2½:1
48	58½	59	36	36	5"	1'-3"	5'-3"	2'-10¾"	8'-1¾"	7'-10"	70 5/16"	24"	4¼"	2½:1
54	65	65	40	40	5½"	1'-7"	5'-3"	2'-11"	8'-2"	8'-6"	72 1/16"	24"	4¾"	2¼:1
60	73	73	45	45	6"	1'-10"	5'-6"	2'-8"	8'-2"	9'-0"	77 1/16"	24"	5"	2¼:1

• THE MEASURED SPAN AND RISE SHALL NOT VARY MORE THAN ± 2 PER CENT FROM THE VALUES SPECIFIED BY AASHTO M 206.

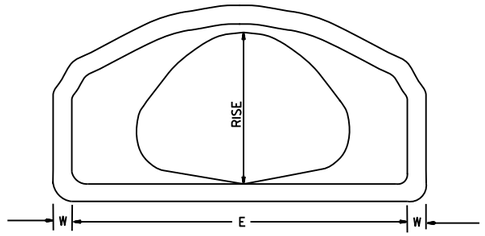

END VIEW
CONCRETE ARCH PIPE

END SECTION FOR REINFORCED CONCRETE PIPE CULVERTS

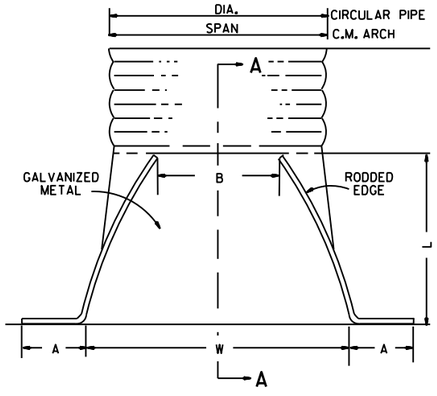

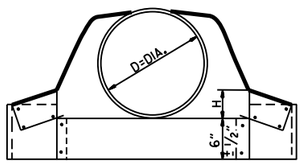

CIRCULAR PIPE

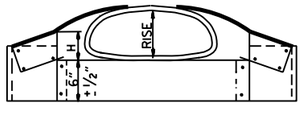

C.M. ARCH PIPE

CIRCULAR PIPE

D. DIA.	GAUGE	A 1" ±	B. MAX.	H 1" ±	L 1½" ±	W 2" ±	S
		INCHES					
12	16	6	6	6	21	24	2½:1
15	16	7	8	6	26	30	2½:1
18	16	8	10	6	31	36	2½:1
21	16	9	12	6	36	42	2½:1
24	16	10	13	6	41	48	2½:1
30	14	12	16	8	51	60	2½:1
36	14	14	19	9	60	72	2½:1
42	12	16	22	11	69	84	2½:1
48	12	18	27	12	78	90	2½:1
54	12	18	30	12	84	102	2:1
60	12	18	33	12	87	114	1¾:1
66	12	18	36	12	87	120	1½:1
72	12	18	39	12	87	126	1 1/3:1

C.M. ARCH PIPE

EQUIV. DIA.	SPAN	RISE	A 1" ±	B MAX.	H 1" ±	L 1½" ±	W 2" ±	S	GAUGE
	INCHES								
15"	17	13	7	9	6	19	30	2½:1	16
18"	21	15	7	10	6	23	36	2½:1	16
21"	24	18	8	12	6	28	42	2½:1	16
24"	28	20	9	14	6	32	48	2½:1	16
30"	35	24	10	16	6	39	60	2½:1	14
36"	42	29	12	18	8	46	75	2½:1	14
42"	49	33	13	21	9	53	85	2½:1	12
48"	57	38	18	26	12	63	90	2½:1	12
54"	64	43	18	30	12	70	102	2¼:1	12
60"	71	47	18	33	12	77	114	2¼:1	12

NOTE: ALTERNATE CONNECTIONS TO THE PIPE CULVERTS, IN ACCORDANCE WITH MANUFACTURER'S STANDARD PRACTICES, MAY BE MADE SUBJECT TO THE APPROVAL OF THE ENGINEER.

END SECTIONS FOR CORRUGATED METAL PIPE CULVERTS

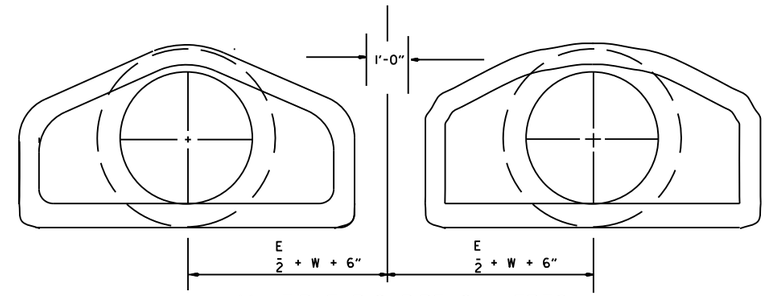

MULTIPLE R.C. PIPE CULVERTS

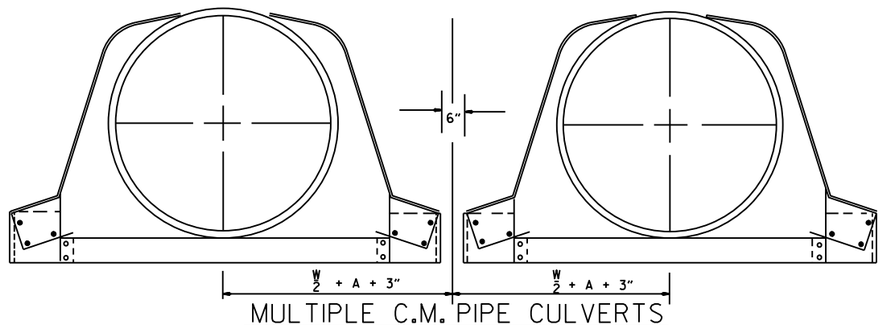

MULTIPLE C.M. PIPE CULVERTS

DATE	REVISION	FILMED
10-18-96	REVISED ASTM REF. TO AASHTO	
5-15-80	REVISED DISTANCE BETWEEN MULTIPLE R.C.P. F.E.S.	664-5-15-80
7-14-78	C.M. ARCH SIZES TO CONFORM WITH AASHTO SIZES	752-7-14-78
8-22-75	ADDED MULTIPLE PIPE CULVERTS	517-8-22-75
12-5-74	REMOVED NOTE RE REINF. FOR R.C. F.E.S.	500-12-5-74
5-24-73	CMP END SECTION, SHOW PIPE PAY LENGTH	627-5-24-73
10-2-72	REVISED AND REDRAWN	760-10-2-72

ARKANSAS STATE HIGHWAY COMMISSION

FLARED END SECTION

STANDARD DRAWING FES-2

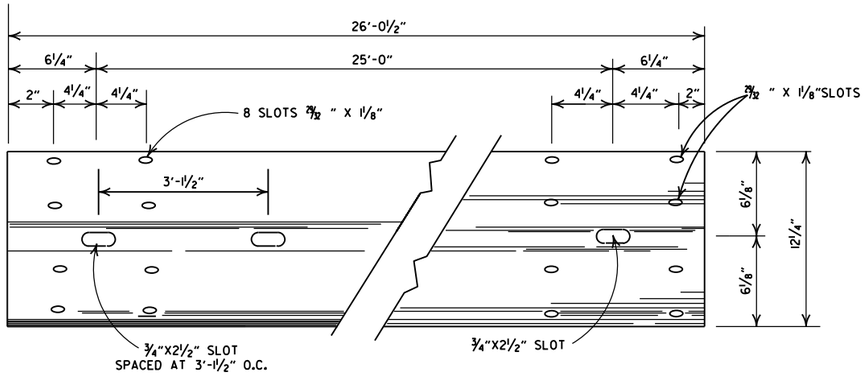

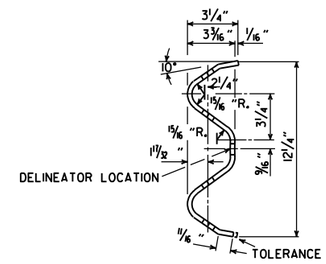

DETAILS OF W-BEAM GUARDRAIL

RAIL SECTION OF CLOSELY SIMILAR DIMENSIONS AND COMPARABLE STRENGTH MAY BE SUBSTITUTED IF APPROVED BY THE ENGINEER.

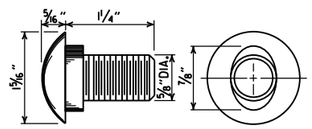

SPLICE BOLT
POST BOLT - SAME EXCEPT LENGTH

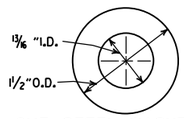

CUT STEEL WASHER

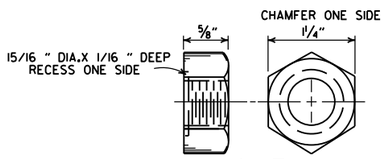

NUT

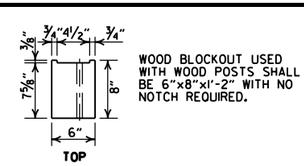

WOOD BLOCKOUT USED WITH WOOD POSTS SHALL BE 6"x8"x1'-2" WITH NO NOTCH REQUIRED.

WOOD BLOCKOUT (W-BEAM)

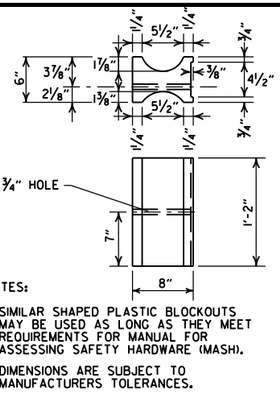

NOTES:

1. SIMILAR SHAPED PLASTIC BLOCKOUTS MAY BE USED AS LONG AS THEY MEET REQUIREMENTS FOR MANUAL FOR ASSESSING SAFETY HARDWARE (MASH).
2. DIMENSIONS ARE SUBJECT TO MANUFACTURERS TOLERANCES.

PLASTIC BLOCKOUT (W-BEAM)

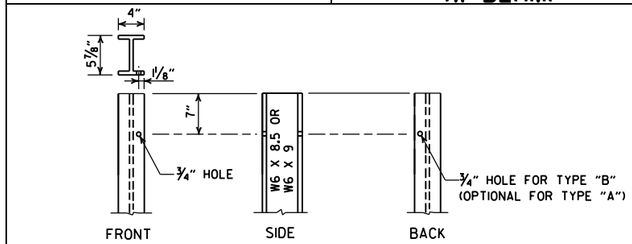

STEEL POST

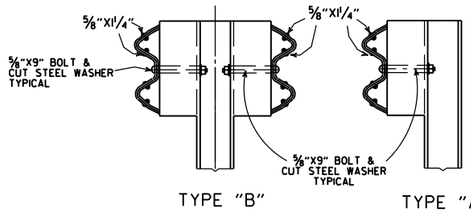

DETAILS OF STEEL LINE POST CONNECTIONS (W-BEAM)

-GENERAL NOTES-

ALL BOLTS SHALL BE SUFFICIENT LENGTH TO EXTEND THROUGH THE FULL THICKNESS OF THE NUT AND NO MORE THAN ¾" BEYOND IT.

WHERE W-BEAM GUARDRAIL CONTINUES, THE INTERMEDIATE SECTIONS SHALL HAVE A POST SPACING OF 6'-3" UNLESS OTHERWISE NOTED.

W-BEAM GUARDRAIL REPRESENTING INTERMEDIATE SECTIONS WILL BE MEASURED ALONG THE ROADWAY FACE FROM CENTERLINE OF POST TO CENTERLINE OF POST.

USE W-BEAM GUARDRAIL COMPONENTS OF SAME MATERIAL FOR ENTIRE JOB. FOR EXTENSIONS OR MODIFICATION OF EXISTING GUARDRAIL, W-BEAM GUARDRAIL COMPONENTS OF THE SAME TYPE AS THOSE EXISTING SHALL BE USED.

ANY BACKFILLING UNDER OR AROUND POST SHALL BE DAMP SAND THOROUGHLY TAMPED IN PLACE.

WOOD POSTS & WOOD BLOCKS SHALL BE EITHER DENSE NO. 1 STRUCTURAL OR BETTER 9.7 f (1400 f) OR NO. 1 1350 f SOUTHERN PINE.

CONTRACTOR SHALL HAVE THE OPTION OF USING WOOD BLOCKOUTS FOR W-BEAM GUARDRAIL OR PLASTIC BLOCKOUTS, AS LONG AS BLOCKOUT USED MEETS REQUIREMENTS FOR MANUAL FOR ASSESSING SAFETY HARDWARE (MASH) FOR W-BEAM GUARDRAIL.

DELINEATORS SHALL BE MOUNTED AT 37.5' SPACING ON THE FRONT FACE OF THE GUARDRAIL. SPACING MAY BE REDUCED IN CURVES, AS DIRECTED BY THE ENGINEER. COLOR SHALL BE IN ACCORDANCE WITH THE MANUAL ON UNIFORM TRAFFIC CONTROL DEVICES. PAYMENT FOR DELINEATORS SHALL BE CONSIDERED INCLUDED IN THE PRICE BID PER LIN. FT. FOR GUARDRAIL.

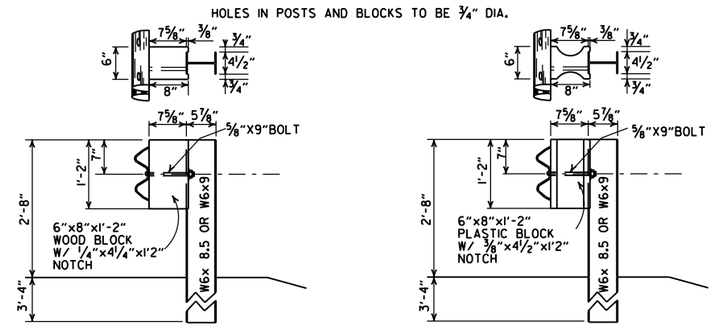

WOOD BLOCKOUT CONNECTIONS

PLASTIC BLOCKOUT CONNECTIONS

DETAILS OF STEEL LINE POST CONNECTIONS (W-BEAM)

POSTS AND BLOCKS TO BE ROUGH SAWN 6"X8" WITH A TOLERANCE OF + OR - ¼".

WOOD BLOCKOUT CONNECTIONS

PLASTIC BLOCKOUT CONNECTIONS

DETAILS OF WOOD LINE POST CONNECTIONS (W-BEAM)

DATE	REVISION	FILMED
05-19-22	REVISED GENERAL NOTES, ADDED DELINEATOR LOCATION.	
11-07-19	RENUMBERED AND RENAMED	
11-16-17	REVISED GENERAL NOTES AND RAISED GUARDRAIL HEIGHT 3"	
07-14-10	RAISED HEIGHT OF GUARDRAIL 1"	
10-15-09	ADDED REFERENCE TO MASH	
04-10-03	REVISED GENERAL NOTES	
08-22-02	REVISED DIMENSION ON WOOD & PLASTIC BLOCKOUT CONNECTIONS & STEEL POST	
11-16-01	REVISED WOOD BLOCKOUT & DETAILS OF WOOD LINE POST CONNECTIONS	
03-30-00	REMOVED GUARDRAIL AT BRIDGE ENDS	
01-12-00	ADDED PLASTIC BLOCKOUT	
08-12-98	REV. BLOCKOUTS TO WOOD, DELETED CONC. POST & REV. GENERAL NOTE, DELETED DET. OF GUARDRAIL REPLACE. BEHIND CURB & DET. OF POST PLACE. IN SOLID ROCK, & ADDED DETAILS OF STEEL LINE POST CONN. REMOVED BACK-UP PLATE, REVISED HOLES IN STEEL POLES	
04-03-97	REMOVED "LAP IN DIRECTION OF TRAFFIC" NOTE & PLACED ARROWS ON WASHERS	
10-18-96	REVISED WOOD POST NOTE	
06-02-94	ADDED ALT. STEEL POST SIZE	
08-05-93	REVISED STEEL POST SIZE	8-5-93
10-01-92	REDRAWN & REVISED	10-1-92
08-15-91	REVISED WASHER NOTE	8-15-91
08-02-90	REV. GEN. NOTE & DEPTH OF ANC. POST IN ROCK	8-2-90
07-15-88	REVISED SECTION 3 & GENERAL NOTES	
03-04-88	REV. ANCHOR POST, ELEV. NOTES & POST IN ROCK	780-3-4-88
10-30-87	REVISED WOOD LINE POST DETAIL	546-10-30-87
10-09-87	REDRAWN & REVISED	802-10-9-87

ARKANSAS STATE HIGHWAY COMMISSION

GUARDRAIL DETAILS

STANDARD DRAWING GR-6

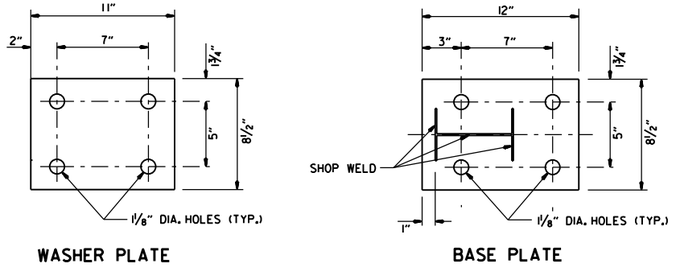

WASHER PLATE

BASE PLATE

Note: Bolts, nuts, washers and plates shall be galvanized in accordance with Section 807 of the Standard Specifications.

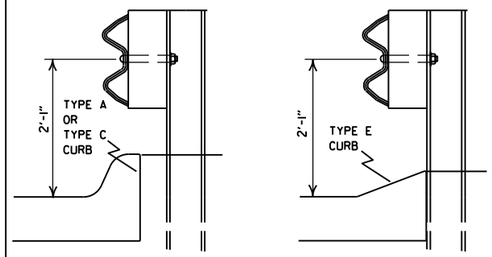

DETAIL OF GUARDRAIL PLACEMENT BEHIND CURB (W-BEAM)

FOR DESIGN SPEEDS OF 50 MPH OR LESS ALL CURB FACES, AS SHOWN ON STD. DRWG. CG-1, MAY BE USED. FOR DESIGN SPEEDS OF 55 MPH OR MORE TYPE "E" CURB FACE SHALL BE USED.

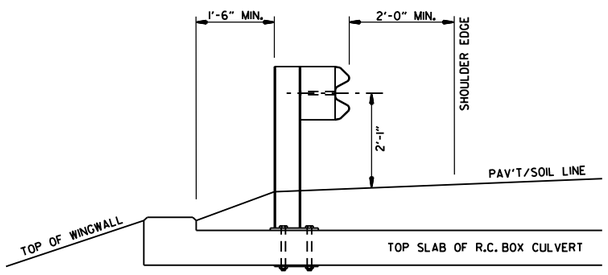

SECTION A-A

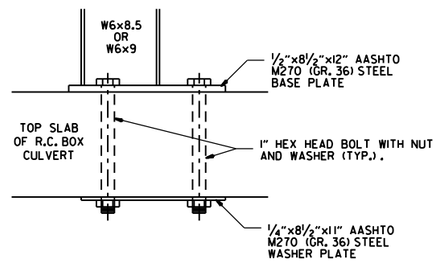

DETAIL OF CONNECTION

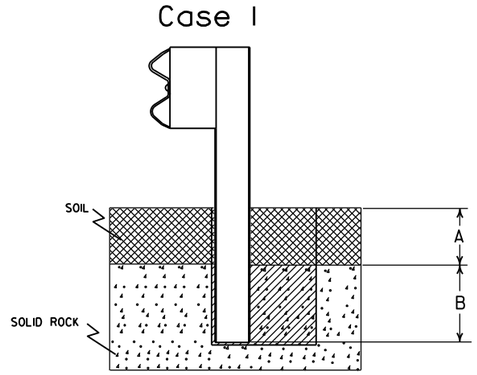

Plan View Steel Posts

Either hole configuration acceptable

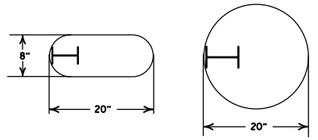

Plan View Wood Posts

Either hole configuration acceptable

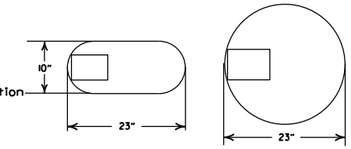

Notes: For overlying soil depths (A) ranging from 0 to 18", the depth of required drilling (B) is equal to 24".

Zone A:
Backfill according to Section 617.03(a).

Zone B:
Backfill hole in 6" lifts with material meeting the requirements of Section 802.02(c) - Alternate gradation. Compact to 95% maximum dry density per ASTM D-698.

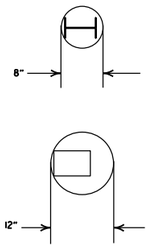

Notes: For overlying soil depths (A) ranging from 18" to 44", the depth of required drilling (B) is equal to either 12" or 44" minus the depth of soil whichever is less.

Zone A & B:
Backfill according to Section 617.03(a).

DETAIL OF POST PLACEMENT IN SOLID ROCK (W-BEAM)

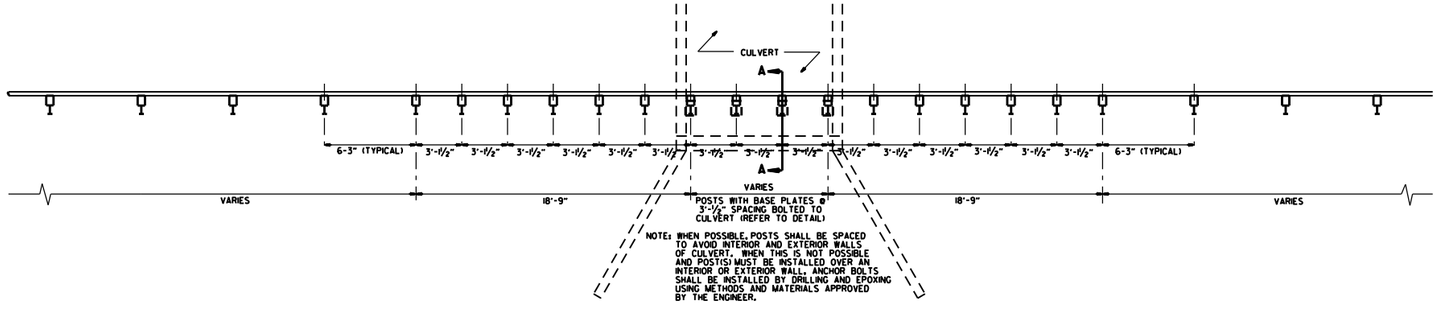

PLAN LAYOUT OF TYPE A GUARDRAIL AT LOW-FILL CULVERTS

NOTE: THIS DETAIL IS TO BE USED ONLY WHEN THE COVER OVER THE CULVERT DOES NOT PERMIT FULL EMBEDMENT OF GUARDRAIL POSTS AS SHOWN ON STD. DWG. GR-6.

DATE	REVISION	FILMED
11-07-19	RENUMBERED, RENAMED, REVISED REFERENCE	
11-16-17	REVISED GUARDRAIL HEIGHT	
07-14-10	RAISED HEIGHT OF GUARDRAIL 1"	
04-12-07	REVISED DETAIL OF GUARDRAIL PLACEMENT BEHIND CURB	
11-10-05	ADDED GUARDRAIL PLACEMENT BEHIND CURB; REVISED DETAIL OF CONNECTION	
11-18-04	REVISED POST PLACEMENT IN ROCK & CULVERT CONNECTION DETAILS. ADDED DETAIL FOR GUARDRAIL PLACEMENT AT LOW-FILL CULVERTS	
03-30-00	REMOVED CONCRETE INSERT ANCHOR	
08-12-98	CHANGED STEEL SPACER BLOCK TO WOOD BLOCKOUT, ADDED DET. OF GUARDRAIL CONNECTION TO R.C. BOX CULV'T., DELETED DET. OF STEEL LINE POST CONN. & ADDED DET. OF GUARDRAIL PLACE. BEHIND CURB & DET. OF POSTPLACE. IN SOLID ROCK	
04-03-96	PLACED ARROWS AT CUT STEEL WASHERS	4-3-96
10-18-96	REV. ASTM REF. TO AASHTO	
11-22-95	ADDED OPTIONAL HOLES	
06-02-94	REVISED ALTERNATE POST SIZE	
08-05-93	REVISED STEEL POST SIZE	
10-01-92	REDRAWN & REVISED	10-1-92
08-02-90	DEL. WASHER ON ANCHOR ASSEMBLY	8-2-90
07-15-88	CONFORMED TO 1988 SPECS	
03-04-88	REVISED ANCHOR NOTE	
10-30-87	REVISED ANCHOR ASSEMBLY	712-10-30-87
10-30-87	REVISED PLACEMENT BEHIND CURB	547-10-30-87
10-09-87	REDRAWN & REVISED	803-10-9-87

ARKANSAS STATE HIGHWAY COMMISSION

GUARDRAIL DETAILS

STANDARD DRAWING GR-7

NOTE: GUARDRAIL WITH GUARDRAIL TERMINAL (TYPE 1) TO BE INSTALLED ONLY AT LOCATIONS SHOWN ON PLANS.

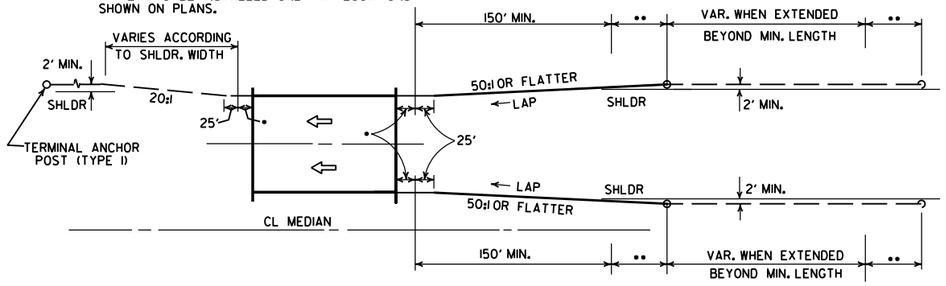

ONE-WAY TRAFFIC

••• LAP OF GUARDRAIL SHALL BE AS SHOWN FOR A DISTANCE OF UP TO 200'. CHANGE TO LAP IN DIRECTION OF TRAVEL.

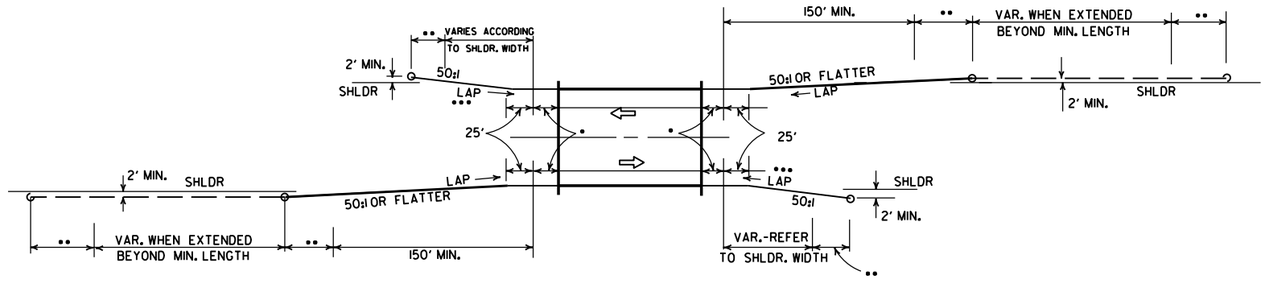

TWO-WAY TRAFFIC

METHODS OF INSTALLATION OF GUARDRAIL AT LESS THAN FULL SHOULDER WIDTH BRIDGES USING GUARDRAIL TERMINAL (TYPE 2)

••• LAP OF GUARDRAIL SHALL BE AS SHOWN FOR A DISTANCE OF UP TO 200'. CHANGE TO LAP IN DIRECTION OF TRAVEL.

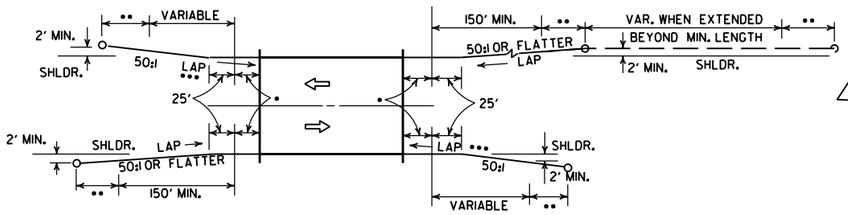

TWO-WAY TRAFFIC

NOTE: GUARDRAIL WITH GUARDRAIL TERMINAL (TYPE 1) TO BE INSTALLED ONLY AT LOCATIONS SHOWN ON PLANS.

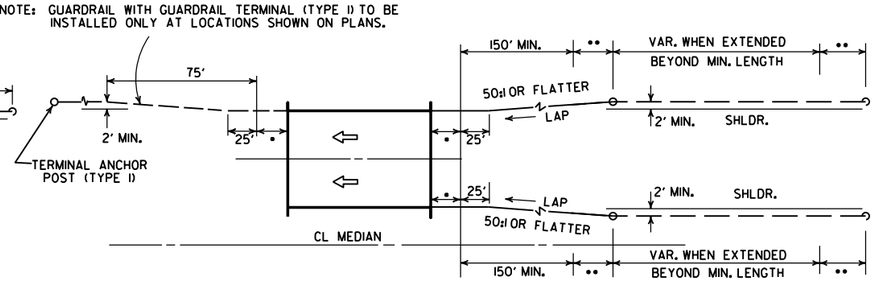

ONE-WAY TRAFFIC

METHOD OF INSTALLATION OF GUARDRAIL AT FULL SHOULDER WIDTH BRIDGES USING GUARDRAIL TERMINAL (TYPE 2)

••• LAP OF GUARDRAIL SHALL BE AS SHOWN FOR A DISTANCE OF UP TO 200'. CHANGE TO LAP IN DIRECTION OF TRAVEL.

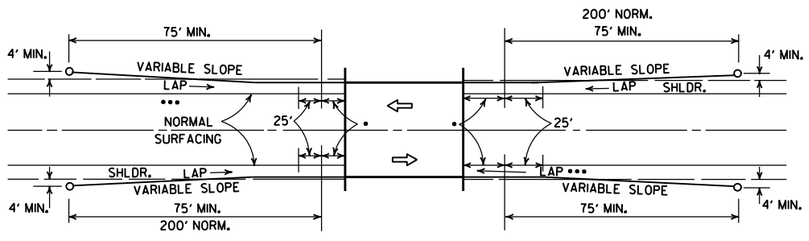

METHOD OF INSTALLATION OF GUARDRAIL USING GUARDRAIL TERMINAL (TYPE 1) (FULL SHOULDER WIDTH OR LESS BRIDGES)

LEGEND

- • THRIE BEAM GUARDRAIL TERMINAL
- •• GUARDRAIL TERMINAL (TYPE 2)

DATE	REVISION	DATE FILM
11-07-19	RENUMBERED AND RENAMED	
4-17-08	REVISED LAYOUTS	
11-10-05	REMOVED GUARDRAIL NOTES AND DETAILS	
11-16-01	DELETED NOTE-METHOD OF INSTALLATION OF GUARDRAIL USING GUARDRAIL TERM. (TY. 1)	
1-12-00	ADDED CONSTRUCTION NOTE	1-12-00
6-26-97	REVISED LAYOUT	
10-1-92	REDRAWN & REVISED	10-1-92
	ADDED NOTE	
10-9-87	REDRAWN & REVISED	

ARKANSAS STATE HIGHWAY COMMISSION

GUARDRAIL DETAILS

STANDARD DRAWING GR-8

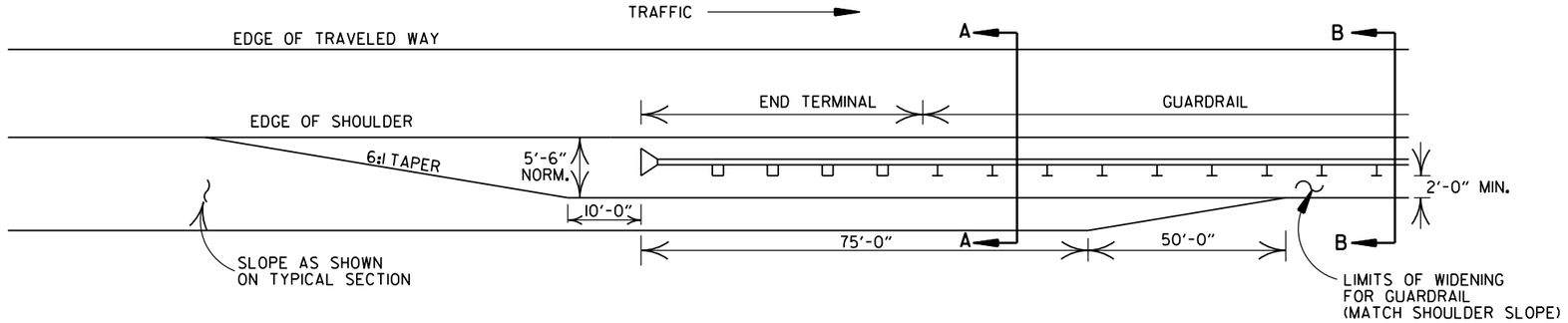

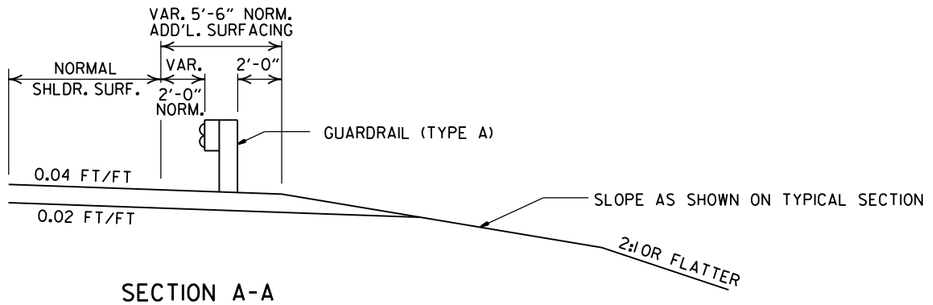

SECTION A-A

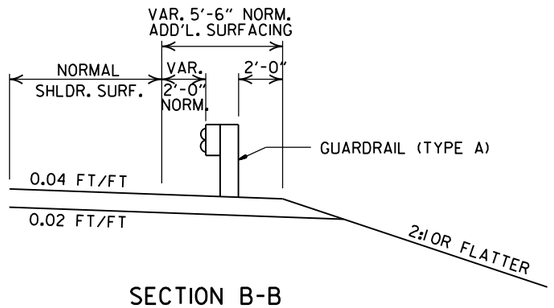

SECTION B-B

DETAILS OF WIDENING FOR GUARDRAIL

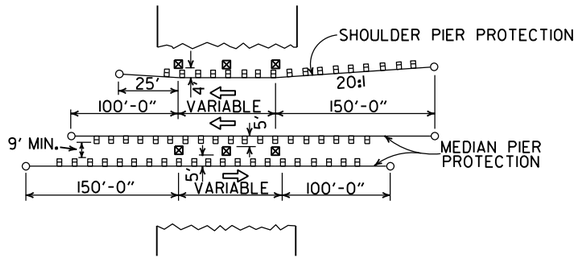

METHOD OF INSTALLATION OF GUARDRAIL AT FIXED OBSTACLE

NOTE: NORMAL SECTION TO BE WIDENED APPROX. 5'-6" EACH SIDE TO SUPPORT GUARDRAIL.

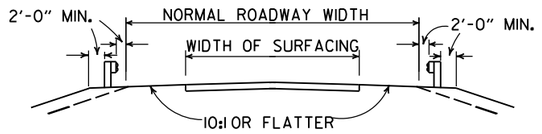

SECTION ON TANGENT

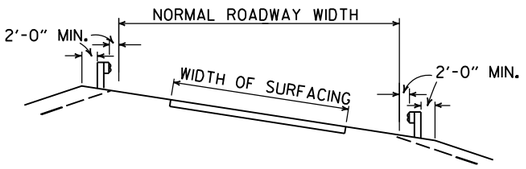

SECTION ON CURVE

DETAILS SHOWING POSITION OF GUARDRAIL ON HIGHWAY

DATE	REVISION	DATE FILM
11-07-19	RENUMBERED AND RENAMED	
4-17-08	MINOR REVISION	
11-10-05	DRAWN	

ARKANSAS STATE HIGHWAY COMMISSION

GUARDRAIL DETAILS

STANDARD DRAWING GR-9

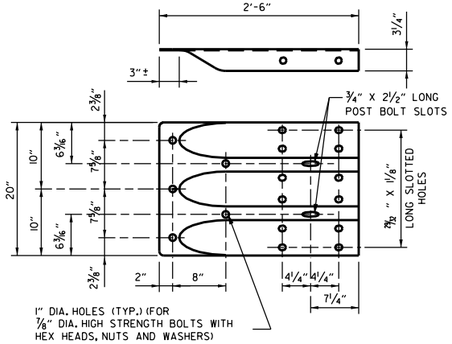

SPECIAL END SHOE

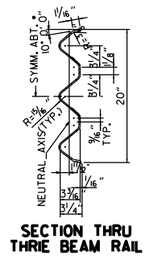

SECTION THRU THRIE BEAM RAIL

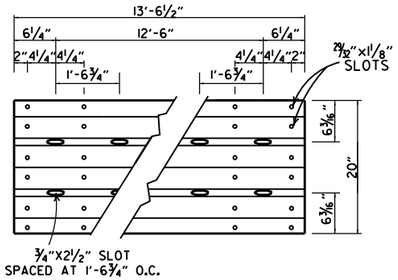

THRIE BEAM RAIL

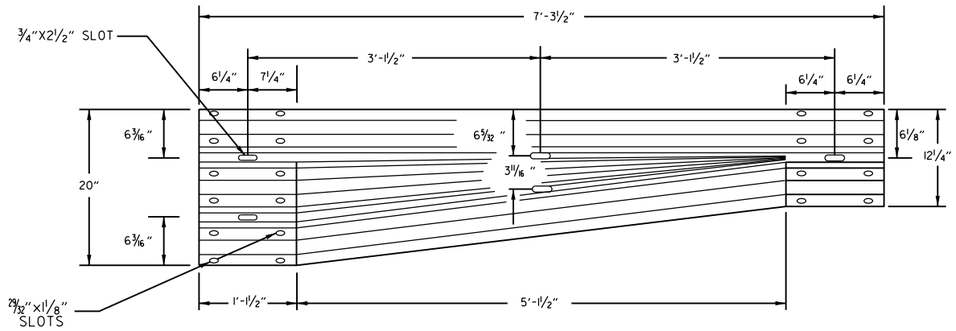

TRANSITION SECTION

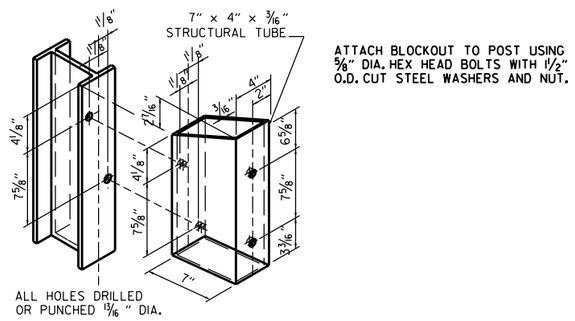

STRUCTURAL STEEL TUBING BLOCKOUT DETAIL

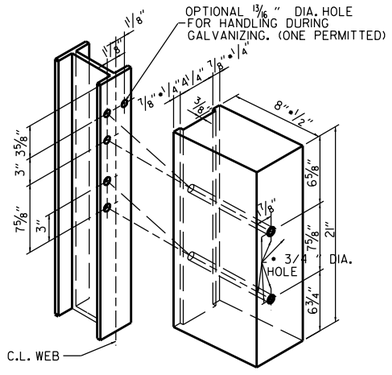

ALL HOLES 13/16" DIAMETER EXCEPT AS NOTED

HOLE PUNCHING DETAIL FOR STEEL POST & WOOD OR PLASTIC BLOCKOUTS

NOTE: BLOCKS SHALL BE THE SAME TYPE THROUGHOUT THE PROJECT LIMITS.

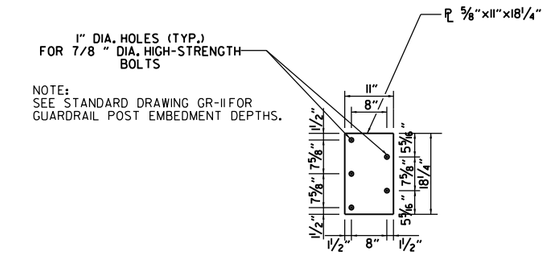

CONNECTOR PLATE

CONNECTOR PLATE SHALL BE AASHTO M270, GR. 36 AND SHALL BE GALVANIZED AFTER FABRICATION. GALVANIZING SHALL CONFORM TO SUBSECTION 807.19 OF THE STANDARD SPECIFICATIONS. CONNECTOR PLATE TO BE BOLTED TO SPECIAL END SHOE USING ⅞" DIA. HIGH STRENGTH BOLTS, WITH THE HEADS PLACED ON THE TRAFFIC FACE. WASHERS SHALL BE USED UNDER THE HEAD AND NUT. BOLTS, NUTS AND WASHERS SHALL BE GALVANIZED AND SHALL CONFORM TO SUBSECTION 807.06.

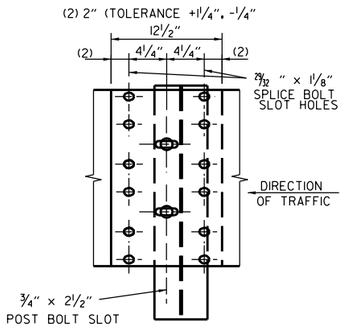

THRIE BEAM RAIL SPLICE AT POST

GENERAL NOTES:

THE THRIE BEAM RAIL, SPECIAL END SHOE, AND THE TRANSITION SECTION SHALL BE MADE OF STEEL AND SHALL BE 12 GAGE. ZINC COATING SHALL BE TYPE 1.

RAIL POSTS SHALL BE SET PERPENDICULAR TO THE ROADWAY PROFILE GRADE AND VERTICALLY IN CROSS SECTION.

ALL BOLTS SHALL BE SUFFICIENT LENGTH TO EXTEND THROUGH THE FULL THICKNESS OF THE NUT AND NO MORE THAN 3"4" BEYOND IT.

ALL LAP SPLICES, INCLUDING SPECIAL END SHOES, SHALL BE MADE IN THE DIRECTION SHOWN ON STANDARD DRAWINGS GR-8 & GR-13.

REFER TO STD. DRWG. GR-11 FOR POST DETAILS.

USE THRIE BEAM GUARDRAIL COMPONENTS OF SAME MATERIAL FOR ENTIRE JOB.

THRIE BEAM POSTS SHALL BE SAME MATERIAL AS W-BEAM POSTS FOR ENTIRE JOB.

WOOD POSTS & WOOD BLOCKS SHALL BE EITHER DENSE NO. 1 STRUCTURAL OR BETTER 9.7 f (1400 f) OR NO. 1 1350 f SOUTHERN PINE.

DATE	REVISION	FILMED
11-07-19	RENAMED AND REVISED REFERENCES	
11-16-17	REVISED TRANSITION SECTION, GUARD RAIL HEIGHT, AND GENERAL NOTES; MOVED THRIE BEAM GUARD RAIL CONNECTIONS AT BRIDGES ENDS TO STD. DRWG. GR-12	
07-14-10	RAISED HEIGHT OF W-BEAM 1"	
11-29-07	ADDED PLASTIC BLOCKOUTS	
11-10-05	ADDED NOTE FOR ATTACHING STEEL BLOCKOUT	
11-18-04	REVISED GENERAL NOTES	
10-9-03	REVISED GENERAL NOTES	
04-10-03	REVISED GENERAL NOTES	
08-22-02	REVISED NOTE (2)	
06-29-00	MOVED DIMENSION LINES	
05-18-00	ADDED NOTE	
03-30-00	DRAWN & ISSUED	

ARKANSAS STATE HIGHWAY COMMISSION

GUARDRAIL DETAILS

STANDARD DRAWING GR-10

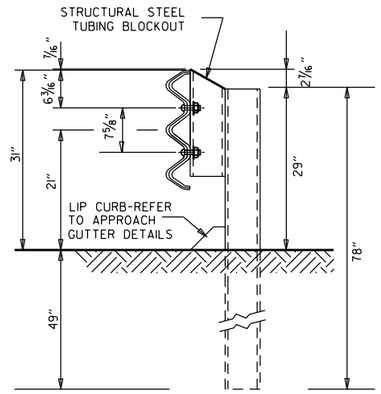

THRIE BEAM RAIL WITH STEEL TUBING BLOCKOUT
AND STEEL POST
POSTS 1-7

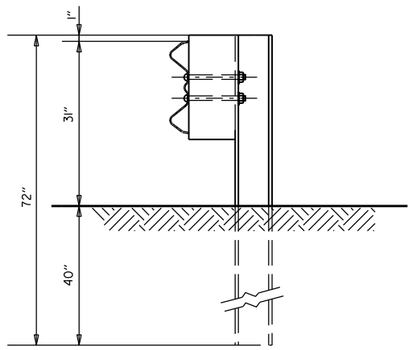

W-BEAM TO THRIE BEAM TRANSITION RAIL
WITH WOOD OR PLASTIC BLOCKOUT AND STEEL POST
POST 8

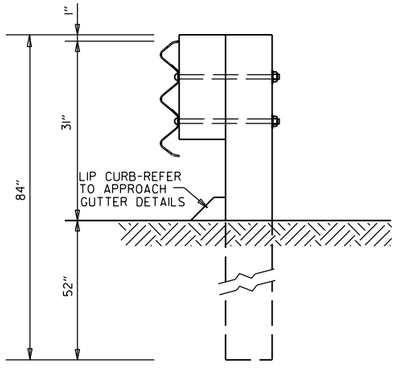

THRIE BEAM RAIL
WITH WOOD OR PLASTIC
BLOCKOUTS & WOOD POSTS
POSTS 1-6

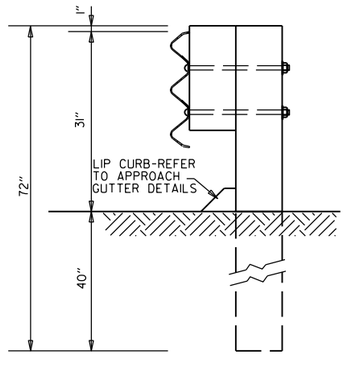

THRIE BEAM RAIL
WITH WOOD OR PLASTIC
BLOCKOUT & WOOD POST
POST 7

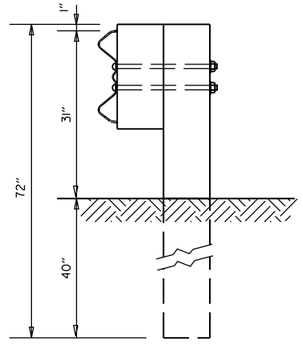

W-BEAM TO THRIE BEAM
TRANSITION RAIL WITH WOOD OR
PLASTIC BLOCKOUT & WOOD POST
POST 8

GENERAL NOTES:

RAIL POSTS SHALL BE SET PERPENDICULAR TO THE ROADWAY PROFILE GRADE AND VERTICALLY IN CROSS SECTION.

WOOD POSTS & WOOD BLOCKS SHALL BE EITHER DENSE NO. 1STRUCTURAL OR BETTER 9.7f (1400 f) OR NO.1 1350 f SOUTHERN PINE.

DATE	REVISION	FILMED
11-07-19	RENAMED	
11-16-17	REVISED GUARDRAIL HEIGHT, CHANGED STD. DWG. NUMBER FROM GR-10A TO GR-11	
07-14-10	REVISED POST 8 DIMENSIONS	
11-29-07	ADDED PLASTIC BLOCKOUTS	
08-22-02	REVISED LIP CURB NOTE	
03-30-00	DRAWN & ISSUED	

ARKANSAS STATE HIGHWAY COMMISSION

GUARDRAIL DETAILS

STANDARD DRAWING GR-11

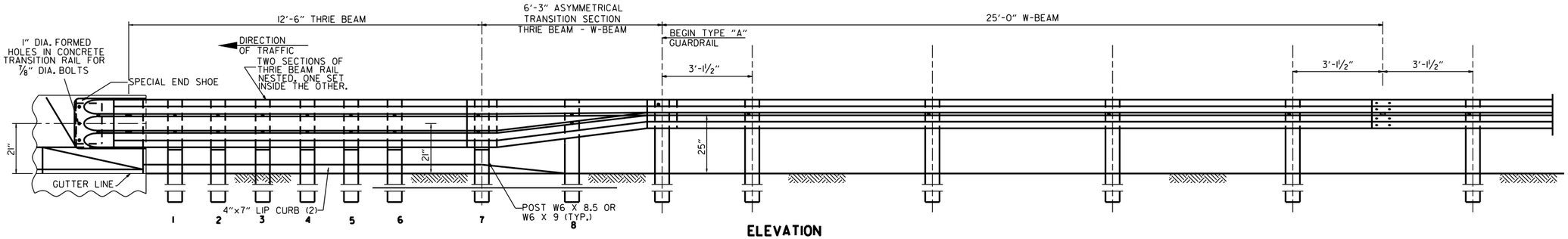

ELEVATION

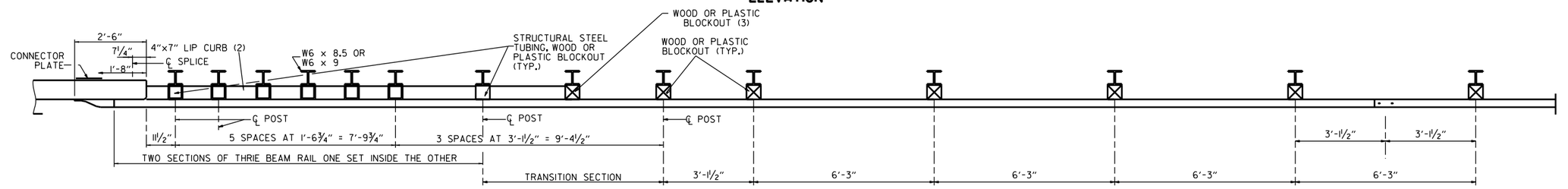

PLAN

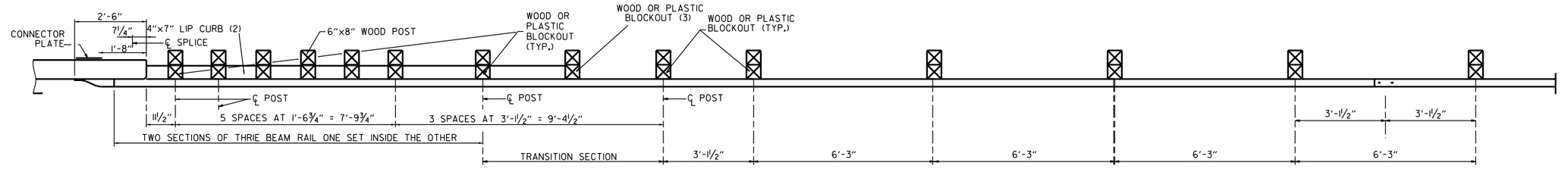

PLAN

(1) VERIFY BOLT SPACING FROM RAIL TRANSITION PRODUCER.
(2) REFER TO APPROACH GUTTER DETAILS.
(3) LENGTH OF BLOCKOUT ON POST 8 TO BE MODIFIED TO FIT RAIL WIDTH.

THRIE BEAM GUARDRAIL CONNECTION AT BRIDGE ENDS

GENERAL NOTES:

THE THRIE BEAM RAIL, SPECIAL END SHOE, AND THE TRANSITION SECTION SHALL BE MADE OF STEEL AND SHALL BE 12 GAGE. ZINC COATING SHALL BE TYPE I.

RAIL POSTS SHALL BE SET PERPENDICULAR TO THE ROADWAY PROFILE GRADE AND VERTICALLY IN CROSS SECTION.

ALL BOLTS SHALL BE SUFFICIENT LENGTH TO EXTEND THROUGH THE FULL THICKNESS OF THE NUT AND NO MORE THAN 3/4" BEYOND IT.

ALL LAP SPLICES, INCLUDING SPECIAL END SHOES, SHALL BE MADE IN THE DIRECTION SHOWN ON STANDARD DRAWINGS GR-8 & GR-13.

REFER TO STD. DRWG. GR-11 FOR POST DETAILS.

USE THRIE BEAM GUARDRAIL COMPONENTS OF SAME MATERIAL FOR ENTIRE JOB.

THRIE BEAM POSTS SHALL BE SAME MATERIAL AS W-BEAM POSTS FOR ENTIRE JOB.

POSTS SHALL NOT BE PLACED AT SPLICE LOCATIONS ALONG W-BEAM RAILS.

WOOD POSTS & WOOD BLOCKS SHALL BE EITHER DENSE NO. 1 STRUCTURAL OR BETTER 9.7f (1400 f) OR NO. 1 1350 f SOUTHERN PINE.

DATE	REVISION	FILMED
05-14-20	REVISED NOTES	
11-07-19	RENAMED & REVISED REFERENCES	
11-16-17	RE-DRAWN FROM STD. DWG. GR-10 & ISSUED	

ARKANSAS STATE HIGHWAY COMMISSION

GUARDRAIL DETAILS

STANDARD DRAWING GR-12

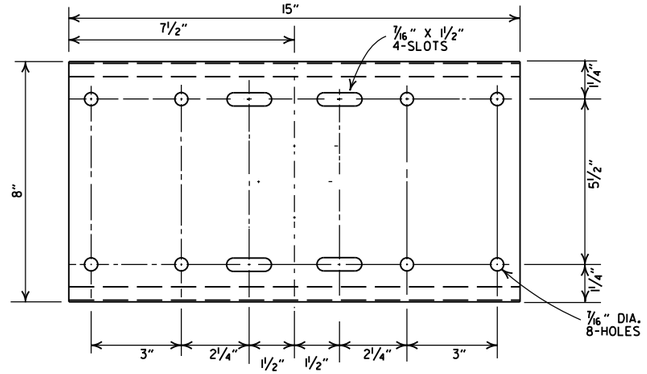

SHELF

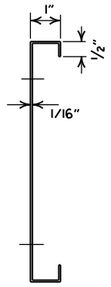

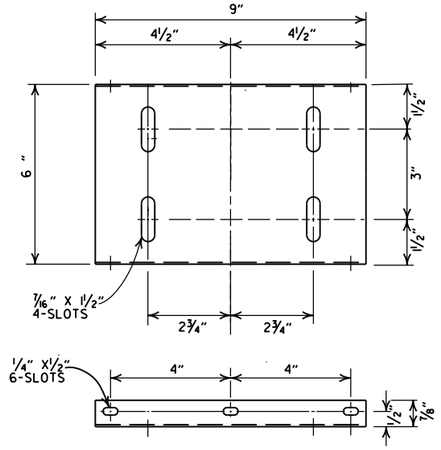

PLATFORM

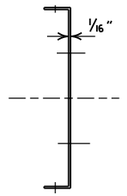

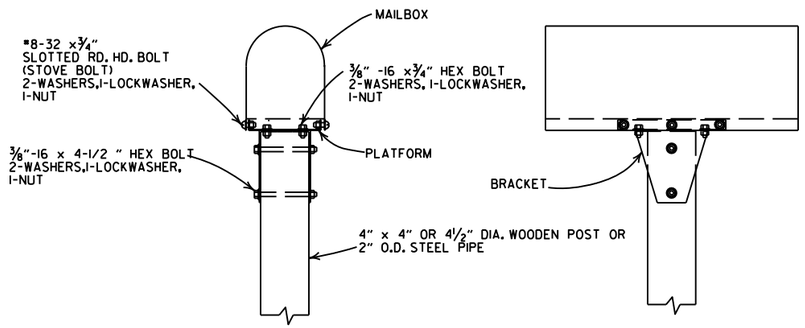

SINGLE INSTALLATION

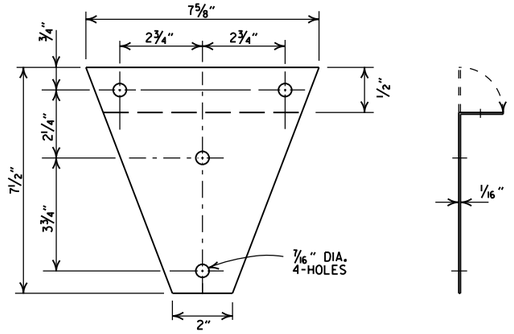

BRACKET

GENERAL NOTES

1. MAILBOX POSTS MAY BE WOOD OR METAL. WOOD POSTS SHALL BE PRESSURE TREATED FOR GROUND CONTACT IN ACCORDANCE WITH SECTION 637.02 OF THE STANDARD SPECIFICATIONS.
2. ANTI-TWIST PLATES SHALL BE USED ONLY ON METAL POSTS.
3. MAILBOX SHELF, BRACKET & PLATFORM SHALL BE GALVANIZED OR PAINTED STEEL, HOWEVER TREATED WOOD MAY BE USED WITH WOODEN POSTS. THE WOODEN SHELF, BRACKET & PLATFORM SHALL BE A MINIMUM OF ¾" THICK AND SHALL BE ASSEMBLED WITH BOLTS OF THE APPROPRIATE LENGTH WITH SIX 8 X¾" FLATHEAD WOOD SCREWS USED TO ATTACH THE MAILBOX TO THE PLATFORM.
4. THE MAILBOX SHELF AND PLATFORM THAT IS SHOWN IS FOR STANDARD SIZE MAILBOXES. THE SHELF AND PLATFORM SIZE SHALL BE MODIFIED TO FIT MAILBOXES OF A DIFFERENT SIZE.
5. METAL PIPE FOR MAILBOX SUPPORT SHALL BE 2" OUTSIDE DIAMETER STEEL WITH A WALL THICKNESS OF 0.145" AND A WEIGHT OF 2.72 LBS PER FT. OUTSIDE DIAMETER AND WEIGHT SHALL HAVE A TOLERANCE OF +/- 5% ACCORDING TO AASHTO M 181.
6. MAILBOX SUPPORT SYSTEM DIFFERING FROM THOSE SHOWN MAY BE USED, PROVIDED THEY ARE ON THE ARDOT QUALIFIED PRODUCTS LIST FOR MAILBOX SUPPORTS.

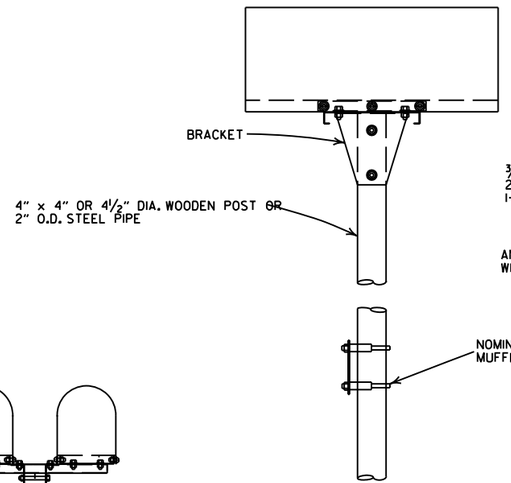

DOUBLE INSTALLATION

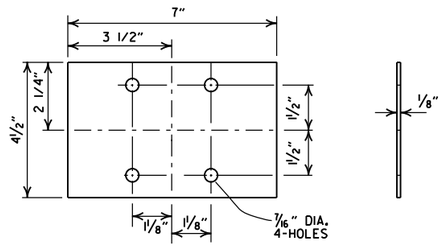

ANTI-TWIST PLATE

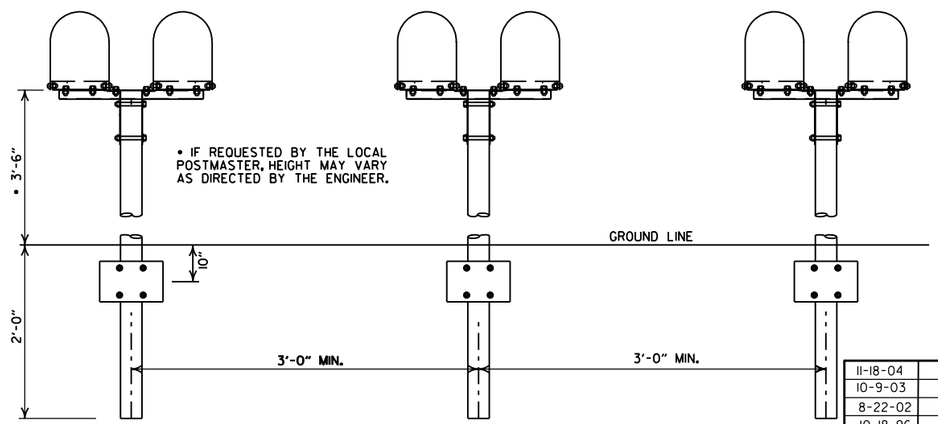

SPACING FOR MULTIPLE POST INSTALLATION

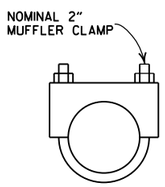

CLAMP

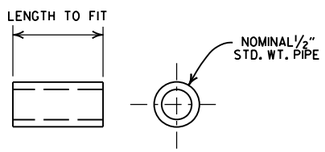

SPACER

DATE	FILMED	REVISION
11-18-04		REVISED NOTES
10-9-03		REVISED NOTE 6
8-22-02		REVISED NOTE 6
10-18-96		CORRECTED AASHTO
10-1-92		CORRECTED SPELLING
9-26-91		NEW PHONE NUMBER
8-15-91		ADDED NOTE
11-30-89		ADJUSTED HEIGHT & ADDED NOTE
2-16-89		DELETED SLOTS FROM SHELF & PLTF
11-17-88	10-1-92	ADJUSTED DIMENSIONS OF STEEL POSTS
7-15-88	20-7-15-88	ISSUED

ARKANSAS STATE HIGHWAY COMMISSION

MAILBOX DETAILS

STANDARD DRAWING MB-1

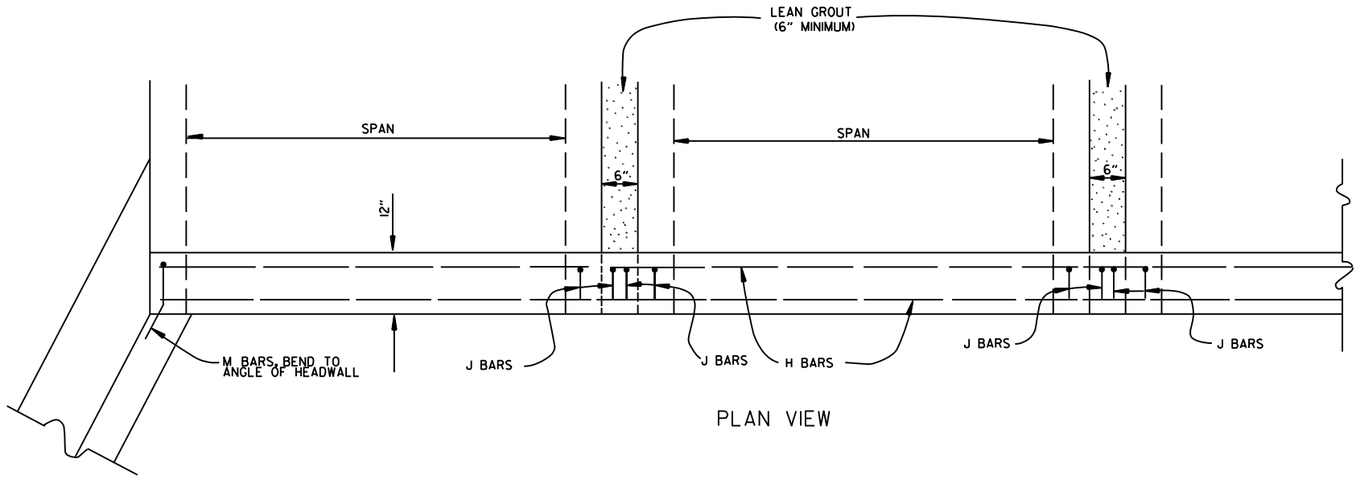

PLAN VIEW

BAR LIST

BAR	NO.	SIZE	LENGTH	BAR BENDING DIAGRAM
H	2	#4	•	
I	•	#4	•	
J	•	#4	1'-5"	
L	•	#4	3'-2"	
M	•	#4	1'-8"	

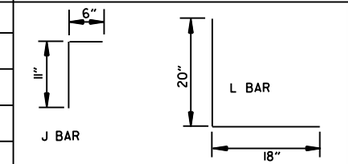

• NOTE: LENGTH AND NUMBER OF BARS VARIES WITH SIZE OF CULVERT

GENERAL NOTES

WINGS, CURTAIN WALLS AND APRONS SHALL BE TIED TO THE PRECAST CULVERT SECTION BY CASTING BARS IN CULVERT END SECTIONS AS SHOWN OR BY DOWELING AND GROUTING. J BARS AND M BARS SHALL BE EMBEDDED A MINIMUM OF 10" IN PRECAST BOX.

WINGS, FOOTINGS, APRONS AND CURTAIN WALLS SHALL BE CONSTRUCTED IN ACCORDANCE WITH THE APPLICABLE WING DRAWING. STEEL AND CONCRETE QUANTITIES WILL BE ADJUSTED TO FIT THE IN-PLACE WIDTH & HEIGHT OF THE PRECAST CONCRETE BOX CULVERTS.

ALL EXPOSED CORNERS TO HAVE ¾" CHAMFERS.

WINGWALLS AND FOOTINGS MAY BE ADJUSTED IN THE FIELD AS DIRECTED BY THE ENGINEER.

ALL CONCRETE, REINFORCING STEEL, LEAN GROUT, MEMBRANE WATERPROOFING, DRAINAGE FILL MATERIAL, GEOTEXTILE FILTER FABRIC, LABOR, MATERIALS AND EQUIPMENT REQUIRED FOR INSTALLING PRECAST BOX CULVERTS WILL NOT BE PAID FOR DIRECTLY BUT WILL BE CONSIDERED TO BE INCLUDED IN THE PRICE BID FOR THE ITEMS AS SPECIFIED IN SECTION 607 OF THE STANDARD SPECIFICATIONS.

LEAN GROUT SHALL CONSIST OF A SAND CEMENT MIXTURE MEETING THE FOLLOWING REQUIREMENTS:
PORTLAND CEMENT SHALL BE TYPE I AND SHALL MEET THE REQUIREMENTS OF AASHTO M 85.
SAND SHALL MEET THE REQUIREMENTS OF FINE AGGREGATE AS SPECIFIED IN SECTION 802.02 OF THE STANDARD SPECIFICATIONS.
THE SAND CEMENT MIXTURE SHALL CONSIST OF NOT LESS THAN 1.5 SACKS OF PORTLAND CEMENT PER TON OF MATERIAL MIXTURE.
THE MIXTURE SHALL CONTAIN SUFFICIENT WATER TO HYDRATE THE CEMENTS. THE SAND CEMENT MIXTURE SHALL BE PLACED IN MAXIMUM 8 INCH THICK LIFTS, LOOSE MEASURE, AND THOROUGHLY RODDED AND TAMPED AROUND BOX TO THOROUGHLY FILL ALL VOIDS.

MEMBRANE WATERPROOFING CONFORMING TO THE REQUIREMENTS OF SECTION 815 OF THE STANDARD SPECIFICATIONS SHALL BE APPLIED TO ALL BOX CULVERT JOINTS.

THE MEMBRANE WATERPROOFING WILL BE REQUIRED ON THE TOP EXTERNAL JOINT AND SHALL EXTEND 1 FOOT DOWN THE SIDES OF THE CULVERT.

IN OUTER BARRELS, ONE WEEP HOLE IS REQUIRED IN EXTERIOR WALLS OF EACH PRECAST CULVERT SECTION. WEEP HOLES SHALL HAVE A MAXIMUM HORIZONTAL SPACING OF 10'-0" IN THE ASSEMBLED CULVERT AND SHALL BE SPACED TO CLEAR ALL REINFORCING STEEL. THE DRAIN OPENING SHALL BE 4" DIAMETER AND SHALL BE PLACED 12" ABOVE THE TOP OF THE BOTTOM SLAB.

DRAINAGE FILL MATERIAL WITH GEOTEXTILE FABRIC IS REQUIRED AT THE EXTERIOR WALLS OF THE ASSEMBLED CULVERT, SEE DETAILS ON THIS DRAWING.

MINIMUM WIDTH SHALL BE 12" (6" ON EACH SIDE OF JOINT). ON MULTIPLE BARREL CULVERTS, MEMBRANE WATERPROOFING SHALL BE APPLIED TO EACH BARREL AS DESCRIBED ABOVE.

WITH THE APPROVAL OF THE ENGINEER, THE CONTRACTOR WILL BE ALLOWED TO SUBSTITUTE, AT NO ADDITIONAL COST TO THE DEPARTMENT, FLOWABLE SELECT MATERIAL CONFORMING TO SECTION 206 OF THE STANDARD SPECIFICATIONS IN LIEU OF LEAN GROUT.

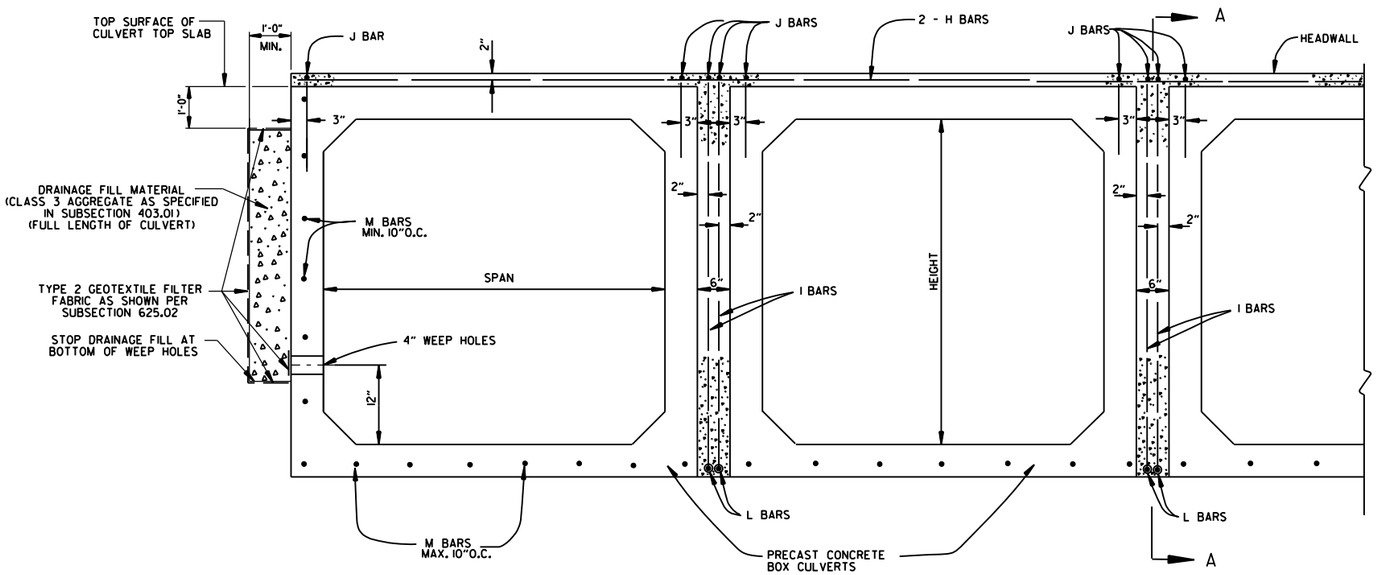

END VIEW

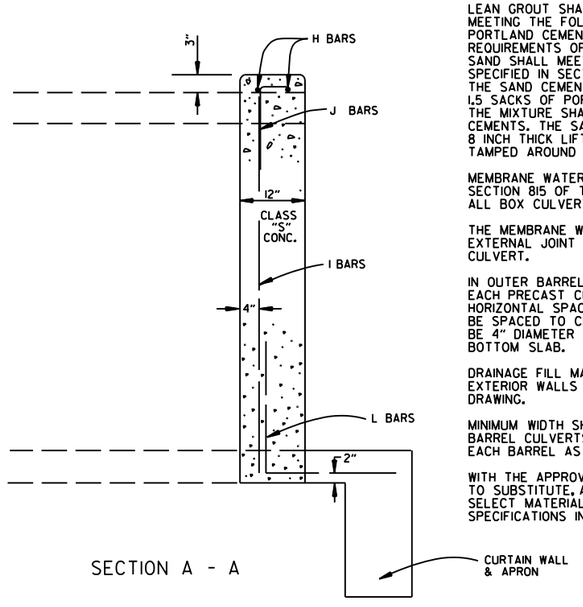

SECTION A - A

DATE	REVISION	DATE FILMED
1-28-15	REVISED GEOTEXTILE FABRIC PLACEMENT	
12-15-11	ADDED NOTE & DTLS FOR WEEP HOLE AND DRAINAGE FILL	
10-15-09	ADDED GENERAL NOTE	
11-10-05	REVISED SPACING OF "M" BARS	
4-10-03	REVISED GENERAL NOTES	
10-18-96	CORRECTED AASHTO REF.	
10-1-92	ADDED NOTE FOR MEMBRANE WATERPROOFING	
8-15-91	ADDED NOTE FOR LEAN GROUT	
11- 8-90	REVISED FOR 1991 SPECS	
11-30-89	ISSUED; JABE	

ARKANSAS STATE HIGHWAY COMMISSION

PRECAST CONCRETE BOX CULVERTS

STANDARD DRAWING PBC-1

REINFORCED CONCRETE ARCH PIPE DIMENSIONS

EQUIV. DIA.	SPAN		RISE	
	AASHTO M 206	ARDOT NOMINAL	AASHTO M 206	ARDOT NOMINAL
INCHES	INCHES			
15	18	18	11	11
18	22	22	13½	14
21	26	26	15½	16
24	28½	29	18	18
30	36¼	36	22½	23
36	43⅜	44	26⅝	27
42	51⅛	51	31⅜	31
48	58½	59	36	36
54	65	65	40	40
60	73	73	45	45
72	88	88	54	54
84	102	102	62	62
90	115	115	72	72
96	122	122	77½	77
108	138	138	87⅛	87
120	154	154	96⅞	97
132	168¾	169	106½	107

THE MEASURED SPAN AND RISE SHALL NOT VARY MORE THAN ± 2 PERCENT FROM THE VALUES SPECIFIED BY AASHTO M206.

REINFORCED CONCRETE HORIZONTAL ELLIPTICAL PIPE DIMENSIONS

EQUIV. DIA.	AASHTO M 207	
	SPAN	RISE
INCHES	INCHES	
18	23	14
24	30	19
27	34	22
30	38	24
33	42	27
36	45	29
39	49	32
42	53	34
48	60	38
54	68	43
60	76	48
66	83	53
72	91	58
78	98	63
84	106	68

THE MEASURED SPAN AND RISE SHALL NOT VARY MORE THAN ± 2 PERCENT FROM THE VALUES SPECIFIED BY AASHTO M207.

CONSTRUCTION SEQUENCE

1. PLACE STRUCTURAL BEDDING MATERIAL TO GRADE. DO NOT COMPACT.
2. INSTALL PIPE TO GRADE.
3. COMPACT STRUCTURAL BEDDING OUTSIDE THE MIDDLE THIRD OF THE PIPE.
4. PLACE AND COMPACT THE HAUNCH AREA UP TO THE MIDDLE OF THE PIPE.
5. COMPLETE BACKFILL ACCORDING TO SUBSECTION 606.03.(f)(1).

NOTE: HAUNCH AND STRUCTURAL BEDDING MATERIAL WILL NOT BE PAID FOR SEPARATELY, BUT COMPENSATION WILL BE CONSIDERED TO BE INCLUDED IN THE PRICE BID PER LINEAR FOOT OF CONCRETE PIPE.

- LEGEND -

D_1 = NORMAL INSIDE DIAMETER OF PIPE
D_O = OUTSIDE DIAMETER OF PIPE
H = FILL COVER HEIGHT OVER PIPE (FEET)
MIN. = MINIMUM
= UNDISTURBED SOIL

INSTALLATION TYPE	MATERIAL REQUIREMENTS FOR HAUNCH AND STRUCTURAL BEDDING
TYPE 1	AGGREGATE BASE COURSE (CLASS 5 OR CLASS 7)
TYPE 2	SELECTED MATERIALS (CLASS SM-1, SM-2, OR SM-4) OR TYPE 1 INSTALLATION MATERIAL*
TYPE 3**	AASHTO CLASSIFICATION A-1 THRU A-6 SOIL OR TYPE 1 OR 2 INSTALLATION MATERIAL

* SM-3 WILL NOT BE ALLOWED.

** MATERIALS SHALL NOT INCLUDE ORGANIC MATERIALS OR STONES LARGER THAN 3 INCHES.

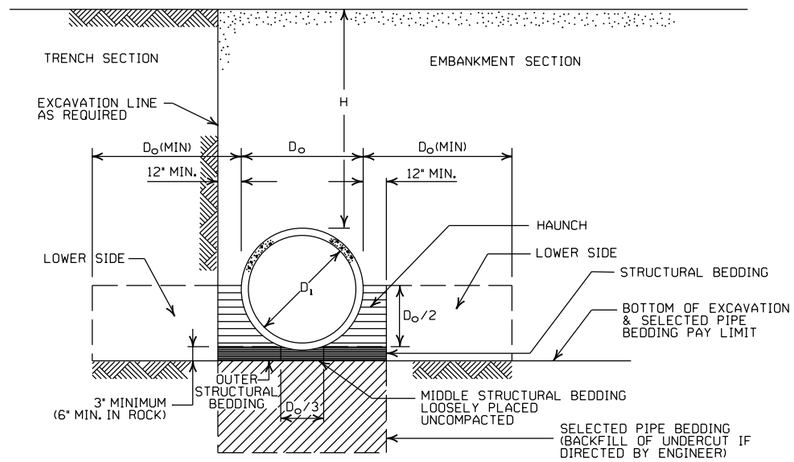

EMBANKMENT AND TRENCH INSTALLATIONS

1. MATERIAL IN THE HAUNCH AND OUTER STRUCTURAL BEDDING SHALL BE COMPACTED TO 95% OF THE MAXIMUM DENSITY ACCORDING TO THE TYPE OR CLASS OF MATERIAL USED.
2. FOR TRENCHES WITH WALLS OF NATURAL SOIL, THE DENSITY OF THE SOIL IN THE LOWER SIDE ZONE SHALL BE AS FIRM AS THE 95% DENSITY REQUIRED FOR THE HAUNCH. IF THE EXISTING SOIL DOES NOT MEET THIS CRITERIA, IT SHALL BE REMOVED AND RECOMPACTED TO 95% OF THE MAXIMUM DENSITY ACCORDING TO THE TYPE OF MATERIAL USED.
3. FOR EMBANKMENTS, THE MATERIAL IN THE LOWER SIDE ZONE SHALL BE COMPACTED TO 95% OF THE MAXIMUM DENSITY ACCORDING TO THE TYPE OR CLASS OF MATERIAL USED.

GENERAL NOTES

1. CONCRETE PIPE CULVERT CONSTRUCTION SHALL CONFORM TO ARKANSAS DEPARTMENT OF TRANSPORTATION STANDARD SPECIFICATIONS FOR HIGHWAY CONSTRUCTION (CURRENT EDITION), WITH APPLICABLE SUPPLEMENTAL SPECIFICATIONS AND SPECIAL PROVISIONS. UNLESS OTHERWISE NOTED IN THE PLANS, SECTION AND SUBSECTION REFER TO THE STANDARD CONSTRUCTION SPECIFICATIONS.
2. CONCRETE PIPE CULVERT DESIGN SHALL CONFORM TO AASHTO LRFD BRIDGE DESIGN SPECIFICATIONS, FIFTH EDITION (2010) WITH 2010 INTERIMS.
3. ALL PIPE SHALL CONFORM TO SECTION 606. CIRCULAR R.C. PIPE CULVERTS SHALL CONFORM TO AASHTO M170, R.C. ARCH PIPE CULVERTS SHALL CONFORM TO AASHTO M206 AND HORIZONTAL ELLIPTICAL PIPE CULVERTS SHALL CONFORM TO AASHTO M207.
4. ALL PIPE SHALL BE PROTECTED DURING CONSTRUCTION BY A COVER SUFFICIENT TO PREVENT DAMAGE FROM PASSAGE OF EQUIPMENT.
5. THE MINIMUM TRENCH WIDTH SHALL BE THE OUTSIDE DIAMETER OF THE PIPE PLUS 24 INCHES. THE MAXIMUM ALLOWABLE TRENCH WIDTH SHALL BE THE MINIMUM WIDTH PRACTICABLE FOR WORKING CONDITIONS.
6. MULTIPLE PIPE CULVERTS SHALL BE INSTALLED WITH A MINIMUM CLEARANCE OF 24 INCHES BETWEEN STRINGS OF PIPE. REFER TO STD. DWG. FES-2 FOR MINIMUM CLEARANCE WHERE FLARED END SECTIONS ARE USED.
7. IMPERVIOUS MATERIAL SHOULD BE PLACED AS DIRECTED BY THE ENGINEER AT THE ENDS OF THE CULVERT TO PREVENT LOSS OF STRUCTURAL BEDDING WHEN PERVIOUS MATERIAL IS USED FOR STRUCTURAL BEDDING AND/OR BACKFILL.
8. NOT MORE THAN ONE LIFTING HOLE MAY BE PROVIDED IN CONCRETE PIPE TO FACILITATE HANDLING. HOLE MAY BE CAST IN PLACE, CUT INTO THE FRESH CONCRETE AFTER FORMS ARE REMOVED, OR DRILLED. THE HOLE SHALL NOT BE MORE THAN TWO INCHES IN DIAMETER OR TWO INCHES SQUARE. CUTTING OR DISPLACEMENT OF REINFORCEMENT WILL NOT BE PERMITTED. SPALLED AREAS AROUND THE HOLE SHALL BE REPAIRED IN A WORKMANLIKE MANNER. LIFTING HOLE SHALL BE FILLED WITH MORTAR, CONCRETE, OR OTHER METHOD AS APPROVED BY THE ENGINEER.
9. WHEN DIRECTED BY THE ENGINEER, UNSUITABLE MATERIAL THAT IS ENCOUNTERED AT THE BOTTOM OF THE EXCAVATED TRENCH (BELOW THE AREA IDENTIFIED AS "STRUCTURAL BEDDING" ABOVE) WILL BE EXCAVATED AND REPLACED WITH SELECTED PIPE BEDDING. THE QUANTITY OF MATERIAL REQUIRED TO BACKFILL THE UNDERCUT AREA UP TO THE SELECTED PIPE BEDDING PAY LIMIT DESIGNATED ABOVE WILL BE MEASURED AND PAID FOR AS "SELECTED PIPE BEDDING."
10. WHEN THE EXISTING MATERIAL EXCAVATED FOR THE PIPE TRENCH IS DETERMINED BY THE ENGINEER TO BE UNSUITABLE FOR BACKFILLING THE PIPE (ABOVE THE AREA IDENTIFIED ABOVE AS THE HAUNCH), BORROW MATERIAL OR MATERIAL FROM THE ROADWAY EXCAVATION WILL BE USED TO BACKFILL THE PIPE. IF SUITABLE MATERIAL IS NOT AVAILABLE, THE ENGINEER MAY AUTHORIZE THE USE OF "SELECTED PIPE BACKFILL."

MINIMUM HEIGHT OF FILL "H" OVER CIRCULAR R.C. PIPE CULVERTS

	CLASS OF PIPE			
	CLASS III		CLASS IV	CLASS V
INSTALLATION TYPE	TYPE 1 OR 2	TYPE 3	ALL	ALL
PIPE ID (IN.)	FEET			
12-15	2	2.5	2	1
18-24	2.5	3	2	1
27-33	3	4	2	1
36-42	3.5	5	2	1
48	4.5	5.5	2	1
54-60	5	7	2	1
66-78	6	8	2	1
84-108	7.5	8	2	1

NOTE: FOR MINIMUM COVER VALUES, "H" SHALL INCLUDE A MINIMUM OF 12" OF PAVEMENT AND/OR BASE.

MAXIMUM HEIGHT OF FILL "H" OVER CIRCULAR R.C. PIPE CULVERTS

INSTALLATION TYPE	CLASS OF PIPE		
	CLASS III	CLASS IV	CLASS V
	FEET		
TYPE 1	21	32	50
TYPE 2	16	25	39
TYPE 3	12	20	30

NOTE: IF FILL HEIGHT EXCEEDS 50 FEET, A SPECIAL DESIGN CONCRETE PIPE WILL BE REQUIRED USING TYPE 1 INSTALLATION.

MINIMUM HEIGHT OF FILL "H" OVER R.C. ARCH & HORIZONTAL ELLIPTICAL PIPE CULVERTS

INSTALLATION TYPE	CLASS OF PIPE	
	CLASS III	CLASS IV
	FEET	
TYPE 2 OR TYPE 3	2.5	1.5

NOTE: TYPE 1 INSTALLATION WILL NOT BE ALLOWED FOR ARCH & HORIZONTAL ELLIPTICAL PIPE CULVERTS.

NOTE: FOR MINIMUM COVER VALUES, "H" SHALL INCLUDE A MINIMUM OF 12" OF PAVEMENT AND/OR BASE.

MAXIMUM HEIGHT OF FILL "H" OVER R.C. ARCH & HORIZONTAL ELLIPTICAL PIPE CULVERTS

INSTALLATION TYPE	CLASS OF PIPE	
	CLASS III	CLASS IV
	FEET	
TYPE 2	13	21
TYPE 3	10	16

NOTE: TYPE 1 INSTALLATION WILL NOT BE ALLOWED FOR ARCH & HORIZONTAL ELLIPTICAL PIPE CULVERTS.

DATE	REVISION	DATE FILMED
2-27-14	REVISED GENERAL NOTE 1.	
12-15-11	REVISED FOR LRFD DESIGN SPECIFICATIONS	
5-18-00	REVISED TYPE 3 BEDDING & ADDED NOTE	
3-30-00	REVISED INSTALLATIONS	
11-06-97	ISSUED	

ARKANSAS STATE HIGHWAY COMMISSION

CONCRETE PIPE CULVERT FILL HEIGHTS & BEDDING

STANDARD DRAWING PCC-1

CORRUGATED STEEL PIPE (ROUND)

PIPE DIAMETER (INCHES)	① MINUMUM COVER TOP OF PIPE TO TOP OF GROUND "H" (FEET)	MAX. FILL HEIGHT "H" ABOVE TOP OF PIPE (FEET)				
		METAL THICKNESS (INCHES)				
		0.064	0.079	0.109	0.138	0.168
2⅔ INCH BY ½ INCH CORRUGATION RIVETED, WELDED, OR HELICAL LOCK-SEAM						
12	1	84	91			
15	1	67	73			
18	1	56	61			
24	1	42	46	59		
30	2	34	36	47		
36	2		30	39	41	
42	2		43	67	70	73
48	2		37	58	61	64
② 3 INCH BY 1 INCH OR 5 INCH BY 1 INCH CORRUGATION RIVETED, WELDED, BOLTED, OR HELICAL LOCK-SEAM						
36	1	48	60	88	111	118
42	1	41	51	72	90	102
48	1	36	45	64	77	85
54	2	32	40	59	71	79
60	2	29	36	53	64	71
66	2	26	33	47	58	64
72	2	24	30	44	53	59
78	2		28	41	49	54
84	2		26	38	45	51
90	2		24	35	43	45
96	2		22	33	40	44
102	2			31	38	42
108	2			30	35	39
114	2			28	34	37
120	2			27	32	35

CORRUGATED ALUMINUM PIPE (ROUND)

PIPE DIAMETER (INCHES)	① MINUMUM COVER TOP OF PIPE TO TOP OF GROUND "H" (FEET)	MAX. FILL HEIGHT "H" ABOVE TOP OF PIPE (FEET)				
		METAL THICKNESS IN INCHES				
		0.060	0.075	0.105	0.135	0.164
		2 ⅔ INCH BY ½ INCH CORRUGATION RIVETED OR HELICAL LOCK-SEAM				
12	1	45	45			
18	2	30	30	52		
24	2	22	22	39	41	
30	2		18	31	32	34
36	2.5		15	26	27	28
42	2			43	43	44
48	2			40	41	43
54	2			35	37	38
60	2				33	34
66	2					31
72	2					29

CONSTRUCTION SEQUENCE

1. PLACE STRUCTURAL BEDDING MATERIAL TO GRADE. DO NOT COMPACT.
2. INSTALL PIPE TO GRADE.
3. COMPACT STRUCTURAL BEDDING OUTSIDE THE MIDDLE THIRD OF THE PIPE.
4. COMPLETE STRUCTURAL BACKFILL OPERATION BY WORKING FROM SIDE TO SIDE OF THE PIPE. THE SIDE TO SIDE STRUCTURAL BACKFILL DIFFERENTIAL SHALL NOT EXCEED 24 INCHES OR 1/3 THE SIZE OF THE PIPE, WHICHEVER IS LESS.

NOTE: STRUCTURAL BACKFILL AND STRUCTURAL BEDDING MATERIAL WILL NOT BE PAID FOR SEPARATELY, BUT COMPENSATION WILL BE CONSIDERED TO BE INCLUDED IN THE PRICE BID PER LINEAR FOOT OF METAL PIPE.

INSTALLATION TYPE	MATERIAL REQUIREMENTS FOR STRUCTURAL BACKFILL AND STRUCTURAL BEDDING
TYPE 1	AGGREGATE BASE COURSE (CLASS 4, 5, 6, OR 7)
TYPE 2	SELECTED MATERIALS (CLASS SM-1, SM-2, OR SM-4) OR TYPE 1 INSTALLATION MATERIAL ③

③ SM-3 WILL NOT BE ALLOWED.

EQUIVALENT METAL THICKNESSES AND GAUGES

METAL THICKNESS IN INCHES			GAUGE NUMBER
STEEL			
ZINC COATED	UNCOATED	ALUMINUM	
0.064	0.0598	0.060	16
0.079	0.0747	0.075	14
0.109	0.1046	0.105	12
0.138	0.1345	0.135	10
0.168	0.1644	0.164	8

CORRUGATED METAL PIPE ARCHES

EQUIV. DIA. (INCHES)	PIPE DIMENSION SPAN X RISE (INCHES)	MINUMUM CORNER RADIUS (INCHES)	STEEL				ALUMINUM			
			MIN. THICKNESS REQUIRED INCHES	① MIN. HEIGHT OF FILL, "H" (FT.)	MAX. HEIGHT OF FILL, "H" (FT.)		MIN. THICKNESS REQUIRED INCHES	① MIN. HEIGHT OF FILL, "H" (FT.)	MAX. HEIGHT OF FILL, "H" (FT.)	
				INSTALLATION	INSTALLATION			INSTALLATION	INSTALLATION	
				TYPE 1	TYPE 1			TYPE 1	TYPE 1	
			2 ⅔ INCH BY ½ INCH CORRUGATION RIVETED, WELDED, OR HELICAL LOCK-SEAM				2 ⅔ INCH BY ½ INCH CORRUGATION RIVETED OR HELICAL LOCK-SEAM			
15	17x13	3	0.064	2	15		0.060	2	15	
18	21x15	3	0.064	2	15		0.060	2	15	
21	24x18	3	0.064	2.25	15		0.060	2.25	15	
24	28x20	3	0.064	2.5	15		0.075	2.5	15	
30	35x24	3	0.079	3	12		0.075	3	12	
36	42x29	3½	0.079	3	12		0.105	3	12	
42	49x33	4	0.079	3	12		0.105	3	12	
48	57x38	5	0.109	3	13		0.135	3	13	
54	64x43	6	0.109	3	14		0.135	3	14	
60	71x47	7	0.138	3	15		0.164	3	15	
66	77x52	8	0.168	3	15					
72	83x57	9	0.168	3	15					
			② 3 INCH BY 1 INCH OR 5 INCH BY 1 INCH CORRUGATION RIVETED, WELDED, OR HELICAL LOCK-SEAM							
				INSTALLATION		INSTALLATION				
				TYPE 2	TYPE 1	TYPE 2	TYPE 1			
36	40x31	5	0.079	3	2	12	15			
42	46x36	6	0.079	3	2	13	15			
48	53x41	7	0.079	3	2	13	15			
54	60x46	8	0.079	3	2	13	15			
60	66x51	9	0.079	3	2	13	15			
66	73x55	12	0.079	3	2	15	15			
72	81x59	14	0.079	3	2	15	15			
78	87x63	14	0.079	3	2	15	15			
84	95x67	16	0.109	3	2	15	15			
90	103x71	16	0.109	3	2	15	15			
96	112x75	18	0.109	3	2	15	15			
102	117x79	18	0.109	3	2	15	15			
108	128x83	18	0.138	3	2	15	15			

① FOR MINIMUM COVER VALUES, "H" SHALL INCLUDE A MINIMUM 12" OF PAVEMENT AND/OR BASE.

② WHERE THE STANDARD 2 2/3"x ½" CORRUGATION AND GAUGE IS SPECIFIED FOR A GIVEN DIAMETER, A PIPE OF THE SAME DIAMETER WITH A 3" x 1" OR 5" x 1" CORRUGATION MAY BE SUBSTITUTED, PROVIDING IT IS GAUGED FOR A FILL HEIGHT CONDITION EQUAL TO OR GREATER THAN THE MAXIMUM FILL HEIGHT CONDITION FOR THE SPECIFIED GAUGE AND CORRUGATION.

- LEGEND -

D_o = OUTSIDE DIAMETER OF PIPE
MAX. = MAXIMUM
MIN. = MINIMUM
= STRUCTURAL BACKFILL MATERIAL
= UNDISTURBED SOIL
EQUIV. DIA. = EQUIVALENT DIAMETER
H = FILL COVER HEIGHT OVER PIPE (FEET)

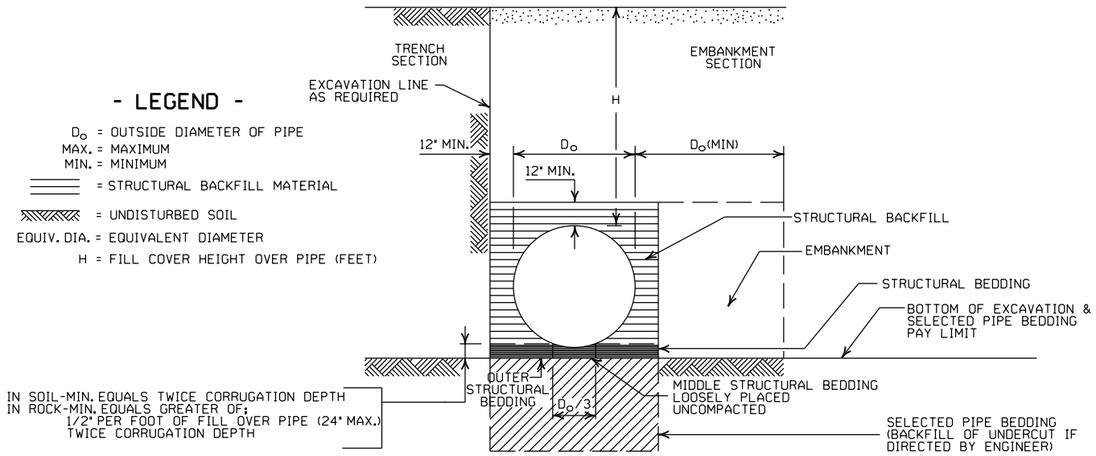

EMBANKMENT AND TRENCH INSTALLATIONS

1. STRUCTURAL BACKFILL, EMBANKMENT, AND OUTER STRUCTURAL BEDDING MATERIAL SHALL BE COMPACTED TO 95% OF THE MAXIMUM DENSITY ACCORDING TO THE TYPE OR CLASS OF MATERIAL USED.
2. INSTALLATION TYPE 1 OR 2 MAY BE USED FOR CORRUGATED STEEL OR ALUMINUM PIPE (ROUND).
3. INSTALALTION TYPE 1 SHALL BE USED FOR CORRUGATED STEEL OR ALUMINUM PIPE ARCHES WITH 2⅔" X ½" CORRUGATION.
4. INSTALLATION TYPE 1 OR 2 MAY BE USED FOR CORRUGATED STEEL OR ALUMINUM PIPE ARCHES WITH 3" X 1" OR 5" X 1" CORRUGATION.

GENERAL NOTES

1. METAL PIPE CULVERT CONSTRUCTION SHALL CONFORM TO ARKANSAS DEPARTMENT OF TRANSPORTATION STANDARD SPECIFICATIONS FOR HIGHWAY CONSTRUCTION (CURRENT EDITION), WITH APPLICABLE SUPPLEMENTAL SPECIFICATIONS AND SPECIAL PROVISIONS. UNLESS OTHERWISE NOTED IN THE PLANS, SECTION AND SUBSECTION REFER TO THE STANDARD CONSTRUCTION SPECIFICATIONS.
2. METAL PIPE CULVERT DESIGN SHALL CONFORM TO AASHTO LRFD BRIDGE DESIGN SPECIFICATIONS, FIFTH EDITION (2010) WITH 2010 INTERIMS.
3. METAL PIPE CULVERT MATERIALS AND INSTALLATIONS SHALL CONFORM TO SECTION 606 AND JOB SPECIAL PROVISION "METAL PIPE".
4. ALL PIPE SHALL BE PROTECTED DURING CONSTRUCTION BY A COVER SUFFICIENT TO PREVENT DAMAGE FROM PASSAGE OF EQUIPMENT.
5. THE MINIMUM TRENCH WIDTH SHALL BE THE OUTSIDE DIAMETER OF THE PIPE PLUS 24 INCHES. THE MAXIMUM ALLOWABLE TRENCH WIDTH SHALL BE THE MINIMUM WIDTH PRACTICABLE FOR WORKING CONDITIONS.
6. MULTIPLE PIPE CULVERTS SHALL BE INSTALLED WITH A MINIMUM CLEARANCE OF 24 INCHES BETWEEN STRINGS OF PIPE. REFER TO STD. DWG. FES-2 FOR MINIMUM CLEARANCE WHERE FLARED END SECTIONS ARE USED.
7. IMPERVIOUS MATERIAL SHOULD BE PLACED AS DIRECTED BY THE ENGINEER AT THE ENDS OF THE CULVERT TO PREVENT LOSS OF STRUCTURAL BEDDING WHEN PERVIOUS MATERIAL IS USED FOR STRUCTURAL BEDDING AND/OR BACKFILL.
8. WHEN DIRECTED BY THE ENGINEER, UNSUITABLE MATERIAL THAT IS ENCOUNTERED AT THE BOTTOM OF THE EXCAVATED TRENCH (BELOW THE AREA IDENTIFIED AS "STRUCTURAL BEDDING" ABOVE) WILL BE EXCAVATED AND REPLACED WITH SELECTED PIPE BEDDING. THE QUANTITY OF MATERIAL REQUIRED TO BACKFILL THE UNDERCUT AREA UP TO THE SELECTED PIPE BEDDING PAY LIMIT DESIGNATED ABOVE WILL BE MEASURED AND PAID FOR AS "SELECTED PIPE BEDDING."
9. WHEN THE EXISTING MATERIAL EXCAVATED FOR THE PIPE TRENCH IS DETERMINED BY THE ENGINEER TO BE UNSUITABLE FOR BACKFILLING THE PIPE (ABOVE THE AREA IDENTIFIED AS STRUCTURAL BACKFILL), BORROW MATERIAL OR MATERIAL FROM THE ROADWAY EXCAVATION WILL BE USED TO BACKFILL THE PIPE. IF SUITABLE MATERIAL IS NOT AVAILABLE, THE ENGINEER MAY AUTHORIZE THE USE OF "SELECTED PIPE BACKFILL."

DATE	REVISION	DATE FILMED
2-27-14	REVISED GENERAL NOTE 1.	
12-15-11	REVISED FOR LRFD DESIGN SPECS	
3-30-00	REVISED INSTALLATIONS	
11-06-97	ISSUED	

ARKANSAS STATE HIGHWAY COMMISSION

METAL PIPE CULVERT FILL HEIGHTS & BEDDING

STANDARD DRAWING PCM-1

INSTALLATION TYPE	•• MATERIAL REQUIREMENTS FOR STRUCTURAL BACKFILL AND STRUCTURAL BEDDING
TYPE 2	•SELECTED MATERIALS (CLASS SM-1, SM-2 OR SM-4)

• AGGREGATE BASE COURSE (CLASS 4, 5, 6, OR 7) MAY BE USED IN LIEU OF SELECTED MATERIAL.

SM3 WILL NOT BE ALLOWED.

•• STRUCTURAL BEDDING MATERIAL SHALL HAVE A MAXIMUM PARTICLE SIZE OF 1INCH. STRUCTURAL BACKFILL MATERIAL SHALL BE FREE OF ORGANIC MATERIAL, STONES LARGER THAN 1.50 INCH IN GREATEST DIMENSION, OR FROZEN LUMPS.

STRUCTURAL BACKFILL AND STRUCTURAL BEDDING MATERIAL WILL NOT BE PAID FOR SEPARATELY, BUT COMPENSATION WILL BE CONSIDERED TO BE INCLUDED IN THE PRICE BID PER LINEAR FOOT OF HDPE PIPE.

MULTIPLE INSTALLATION OF HIGH DENSITY POLYETHYLENE PIPES

PIPE DIAMETER	CLEAR DISTANCE BETWEEN PIPES
18"	1'-6"
24"	2'-0"
30"	2'-6"
36"	3'-0"
42"	3'-6"
48"	4'-0"

MINIMUM TRENCH WIDTH BASED ON FILL HEIGHT "H"

PIPE DIAMETER	TRENCH WIDTH (FEET)	
	"H" < 10'-0"	"H" >OR= 10'-0"
18"	4'-6"	4'-6"
24"	5'-0"	6'-0"
30"	5'-6"	7'-6"
36"	6'-0"	9'-0"
42"	7'-0"	10'-6"
48"	8'-0"	12'-0"

①NOTE:
18" MIN. (18" - 30" DIAMETERS)
24" MIN. (36" - 48" DIAMETERS)

MINIMUM COVER VALUES, "H" SHALL INCLUDE A MINIMUM 12" OF PAVEMENT AND/OR BASE.

MINIMUM COVER FOR CONSTRUCTION LOADS

PIPE DIAMETER	② MIN. COVER (FEET) FOR INDICATED CONSTRUCTION LOADS			
	18.0-50.0 (KIPS)	50.0-75.0 (KIPS)	75.0-110.0 (KIPS)	110.0-175.0 (KIPS)
36" OR LESS	2'-0"	2'-6"	3'-0"	3'-0"
42" OR GREATER	3'-0"	3'-0"	3'-6"	4'-0"

②MINIMUM COVER SHALL BE MEASURED FROM TOP OF PIPE TO TOP OF THE MAINTAINED CONSTRUCTION ROADWAY SURFACE. THE SURFACE SHALL BE MAINTAINED.

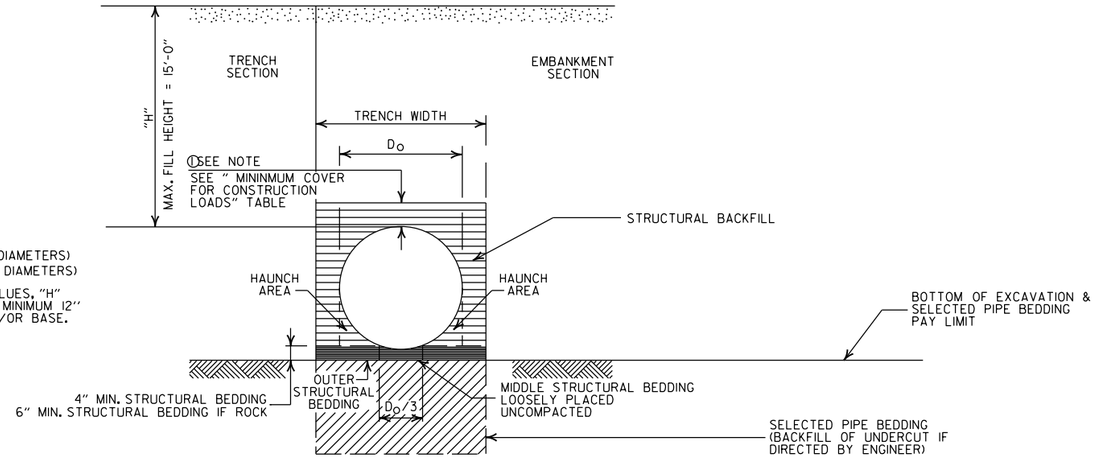

TYPE 2 EMBANKMENT AND TRENCH INSTALLATIONS

1. STRUCTURAL BACKFILL, EMBANKMENT, AND OUTER STRUCTURAL BEDDING MATERIAL SHALL BE COMPACTED TO 95% OF THE MAXIMUM DENSITY ACCORDING TO THE TYPE OR CLASS OF MATERIAL USED.

CONSTRUCTION SEQUENCE

1. PLACE STRUCTURAL BEDDING MATERIAL TO GRADE. DO NOT COMPACT.
2. INSTALL PIPE TO GRADE.
3. COMPACT STRUCTURAL BEDDING OUTSIDE THE MIDDLE THIRD OF THE PIPE.
4. THE STRUCTURAL BACKFILL SHALL BE PLACED AND COMPACTED IN LAYERS NOT EXCEEDING 8". THE LAYERS SHALL BE BROUGHT UP EVENLY AND SIMULTANEOUSLY TO THE ELEVATION OF THE MINIMUM COVER.
5. PIPE INSTALLATION MAY REQUIRE THE USE OF RESTRAINTS, WEIGHTING OR OTHER APPROVED METHODS IN ORDER TO HELP MAINTAIN GRADE AND ALIGNMENT.

GENERAL NOTES

1. PIPE SHALL CONFORM TO AASHTO M294, TYPE S. INSTALLATION SHALL CONFORM TO JOB SPECIAL PROVISION "PLASTIC PIPE" AND SECTION 606 OF THE STANDARD SPECIFICIATIONS FOR HIGHWAY CONSTRUCTION (CURRENT EDITION).
2. PLASTIC PIPE CULVERT DESIGN SHALL CONFORM TO AASHTO LRFD BRIDGE DESIGN SPECIFICATIONS, FIFTH EDITION (2010) WITH 2010 INTERIMS.
3. THE MAXIMUM ALLOWABLE TRENCH WIDTH SHALL BE THE MINIMUM WIDTH PLUS A SUFFICIENT WIDTH TO ENSURE WORKING ROOM TO PROPERLY AND SAFELY PLACE AND COMPACT HAUNCHING AND OTHER BACKFILL MATERIAL.
4. IMPERVIOUS MATERIAL SHOULD BE PLACED AS DIRECTED BY THE ENGINEER AT THE ENDS OF THE CULVERT TO PREVENT LOSS OF STRUCTURAL BEDDING WHEN PERVIOUS MATERIAL IS USED FOR STRUCTURAL BEDDING AND/OR BACKFILL.
5. WHEN DIRECTED BY THE ENGINEER, UNSUITABLE MATERIAL THAT IS ENCOUNTERED AT THE BOTTOM OF THE EXCAVATED TRENCH (BELOW THE AREA IDENTIFIED AS "STRUCTURAL BEDDING" ABOVE) WILL BE EXCAVATED AND REPLACED WITH SELECTED PIPE BEDDING. THE QUANTITY OF MATERIAL REQUIRED TO BACKFILL THE UNDERCUT AREA UP TO THE SELECTED PIPE BEDDING PAY LIMIT DESIGNATED ABOVE WILL BE MEASURED AND PAID FOR AS "SELECTED PIPE BEDDING."
6. WHEN THE EXISTING MATERIAL EXCAVATED FOR THE PIPE TRENCH IS DETERMINED BY THE ENGINEER TO BE UNSUITABLE FOR BACKFILLING THE PIPE (ABOVE THE AREA IDENTIFIED ABOVE AS STRUCTURAL BACKFILL), BORROW MATERIAL OR MATERIAL FROM THE ROADWAY EXCAVATION WILL BE USED TO BACKFILL THE PIPE. IF SUITABLE MATERIAL IS NOT AVAILABLE, THE ENGINEER MAY AUTHORIZE THE USE OF "SELECTED PIPE BACKFILL."
7. FOR PIPE TYPES THAT ARE NOT SMOOTH ON THE OUTSIDE (CORRUGATED OR PROFILE WALLS), BACKFILL GRADATIONS SHOULD BE SELECTED THAT WILL PERMIT THE FILLING OF THE CORRUGATION OR PROFILE VALLEY.
8. HIGH DENSITY POLYETHYLENE PIPES OF DIAMETERS OTHER THAN SHOWN WILL NOT BE ALLOWED.
9. JOINTS FOR HDPE PIPE SHALL MEET THE REQUIREMENTS FOR SOIL TIGHTNESS AS SPECIFIED IN AASHTO SECTION 26.4.2.4 AND 30.4.2 "AASHTO LRFD BRIDGE CONSTRUCTION SPECIFICATIONS." JOINTS SHALL BE INSTALLED PER MANUFACTURER'S RECOMMENDATIONS.

- LEGEND -

H = FILL HEIGHT (FT.)
D = OUTSIDE DIAMETER OF PIPE
MAX. = MAXIMUM
MIN. = MINIMUM

= STRUCTURAL BACKFILL MATERIAL

= UNDISTURBED SOIL

DATE	REVISION	DATE FILMED
2-27-14	REVISED GENERAL NOTE 1.	
12-15-11	REVISED GENERAL NOTES & MINIMUM COVER NOTE	
11-17-10	ISSUED	

ARKANSAS STATE HIGHWAY COMMISSION

PLASTIC PIPE CULVERT (HIGH DENSITY POLYETHYLENE)

STANDARD DRAWING PCP-1

INSTALLATION TYPE	•• MATERIAL REQUIREMENTS FOR STRUCTURAL BACKFILL AND STRUCTURAL BEDDING
TYPE 2	•SELECTED MATERIALS (CLASS SM-1, SM-2, OR SM-4)

• AGGREGATE BASE COURSE (CLASS 4, 5, 6, OR 7) MAY BE USED IN LIEU OF SELECTED MATERIAL.

SM3 WILL NOT BE ALLOWED.

•• STRUCTURAL BEDDING MATERIAL SHALL HAVE A MAXIMUM PARTICLE SIZE OF 1INCH. STRUCTURAL BACKFILL MATERIAL SHALL BE FREE OF ORGANIC MATERIAL, STONES LARGER THAN 1.50 INCH IN GREATEST DIMENSION, OR FROZEN LUMPS.

STRUCTURAL BACKFILL AND STRUCTURAL BEDDING MATERIAL WILL NOT BE PAID FOR SEPARATELY, BUT COMPENSATION WILL BE CONSIDERED TO BE INCLUDED IN THE PRICE BID PER LINEAR FOOT OF PVC PIPE.

MINIMUM TRENCH WIDTH BASED ON FILL HEIGHT "H"

PIPE DIAMETER	TRENCH WIDTH (FEET)	
	"H" < 10'-0"	"H" >OR= 10'-0"
18"	4'-6"	4'-6"
24"	5'-0"	6'-0"
30"	5'-6"	7'-6"
36"	6'-0"	9'-0"

MULTIPLE INSTALLATION OF PVC PIPES

PIPE DIAMETER	CLEAR DISTANCE BETWEEN PIPES
18"	1'-6"
24"	2'-0"
30"	2'-6"
36"	3'-0"

MAXIMUM FILL HEIGHT BASED ON STRUCTURAL BACKFILL

PIPE DIAMETER	"H"
18"	45'-0"
24"	45'-0"
30"	40'-0"
36"	40'-0"

① NOTE:
12" MIN. (18" - 36" DIAMETERS)
MINIMUM COVER VALUE, "H" SHALL INCLUDE A MINIMUM 12" OF PAVEMENT AND/OR BASE.

MINIMUM COVER FOR CONSTRUCTION LOADS

PIPE DIAMETER	② MIN. COVER (FEET) FOR INDICATED CONSTRUCTION LOADS			
	18.0-50.0 (KIPS)	50.0-75.0 (KIPS)	75.0-110.0 (KIPS)	110.0-175.0 (KIPS)
18" THRU 36"	2'-0"	2'-6"	3'-0"	3'-0"

②MINIMUM COVER SHALL BE MEASURED FROM TOP OF PIPE TO TOP OF THE MAINTAINED CONSTRUCTION ROADWAY SURFACE. THE SURFACE SHALL BE MAINTAINED.

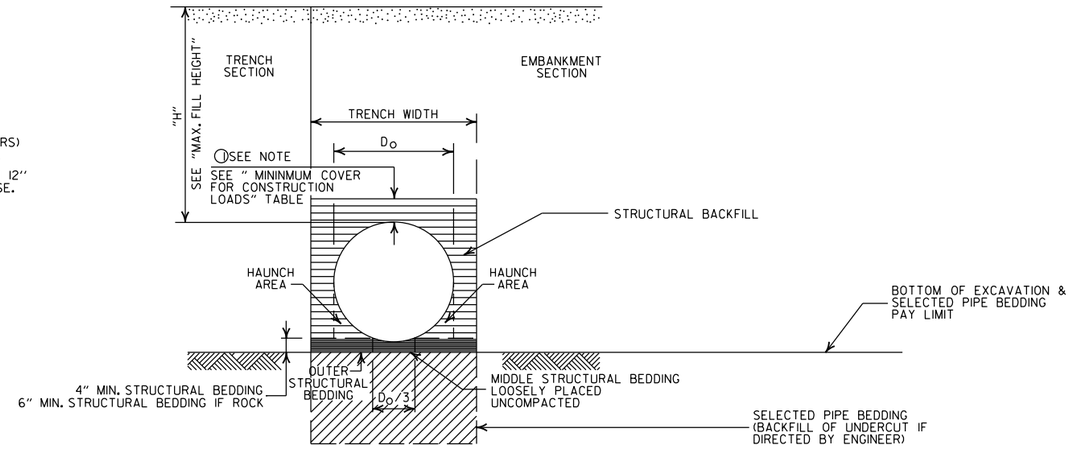

TYPE 2 EMBANKMENT AND TRENCH INSTALLATIONS

1. STRUCTURAL BACKFILL, EMBANKMENT, AND OUTER STRUCTURAL BEDDING MATERIAL SHALL BE COMPACTED TO 95% OF THE MAXIMUM DENSITY ACCORDING TO THE TYPE OR CLASS OF MATERIAL USED.

CONSTRUCTION SEQUENCE

1. PLACE STRUCTURAL BEDDING MATERIAL TO GRADE. DO NOT COMPACT.
2. INSTALL PIPE TO GRADE.
3. COMPACT STRUCTURAL BEDDING OUTSIDE THE MIDDLE THIRD OF THE PIPE.
4. THE STRUCTURAL BACKFILL SHALL BE PLACED AND COMPACTED IN LAYERS NOT EXCEEDING 8". THE LAYERS SHALL BE BROUGHT UP EVENLY AND SIMULTANEOUSLY TO THE ELEVATION OF THE MINIMUM COVER.
5. PIPE INSTALLATION MAY REQUIRE THE USE OF RESTRAINTS, WEIGHTING OR OTHER APPROVED METHODS IN ORDER TO HELP MAINTAIN GRADE AND ALIGNMENT.

GENERAL NOTES

1. PIPE SHALL CONFORM TO ASTM F949, CELL CLASS 12454. INSTALLATION SHALL CONFORM TO JOB SPECIAL PROVISION "PLASTIC PIPE" AND SECTION 606 OF THE STANDARD SPECIFICATIONS FOR HIGHWAY CONSTRUCTION (CURRENT EDITION).
2. PLASTIC PIPE CULVERT DESIGN SHALL CONFORM TO AASHTO LRFD BRIDGE DESIGN SPECIFICATIONS, FIFTH EDITION (2010) WITH 2010 INTERIMS.
3. THE MAXIMUM ALLOWABLE TRENCH WIDTH SHALL BE THE MINIMUM WIDTH PLUS A SUFFICIENT WIDTH TO ENSURE WORKING ROOM TO PROPERLY AND SAFELY PLACE AND COMPACT HAUNCHING AND OTHER BACKFILL MATERIAL.
4. IMPERVIOUS MATERIAL SHOULD BE PLACED AS DIRECTED BY THE ENGINEER AT THE ENDS OF THE CULVERT TO PREVENT LOSS OF STRUCTURAL BEDDING WHEN PERVIOUS MATERIAL IS USED FOR STRUCTURAL BEDDING AND/OR BACKFILL.
5. WHEN DIRECTED BY THE ENGINEER, UNSUITABLE MATERIAL THAT IS ENCOUNTERED AT THE BOTTOM OF THE EXCAVATED TRENCH (BELOW THE AREA IDENTIFIED AS "STRUCTURAL BEDDING" ABOVE) WILL BE EXCAVATED AND REPLACED WITH SELECTED PIPE BEDDING. THE QUANTITY OF MATERIAL REQUIRED TO BACKFILL THE UNDERCUT AREA UP TO THE SELECTED PIPE BEDDING PAY LIMIT DESIGNATED ABOVE WILL BE MEASURED AND PAID FOR AS "SELECTED PIPE BEDDING."
6. WHEN THE EXISTING MATERIAL EXCAVATED FOR THE PIPE TRENCH IS DETERMINED BY THE ENGINEER TO BE UNSUITABLE FOR BACKFILLING THE PIPE (ABOVE THE AREA IDENTIFIED ABOVE AS STRUCTURAL BACKFILL), BORROW MATERIAL OR MATERIAL FROM THE ROADWAY EXCAVATION WILL BE USED TO BACKFILL THE PIPE. IF SUITABLE MATERIAL IS NOT AVAILABLE, THE ENGINEER MAY AUTHORIZE THE USE OF "SELECTED PIPE BACKFILL."
7. FOR PIPE TYPES THAT ARE NOT SMOOTH ON THE OUTSIDE (CORRUGATED OR PROFILE WALLS), BACKFILL GRADATIONS SHOULD BE SELECTED THAT WILL PERMIT THE FILLING OF THE CORRUGATION OR PROFILE VALLEY.
8. PVC PIPES OF DIAMETERS OTHER THAN SHOWN WILL NOT BE ALLOWED.
9. JOINTS FOR PVC PIPE SHALL MEET THE REQUIREMENTS FOR SOIL TIGHTNESS AS SPECIFIED IN AASHTO SECTION 26.4.2.4 AND 30.4.2 "AASHTO LRFD BRIDGE CONSTRUCTION SPECIFICATIONS." JOINTS SHALL BE INSTALLED PER MANUFACTURER'S RECOMMENDATIONS.

- LEGEND -

H = FILL HEIGHT (FT.)
D_O = OUTSIDE DIAMETER OF PIPE
MAX. = MAXIMUM
MIN. = MINIMUM

= STRUCTURAL BACKFILL MATERIAL
= UNDISTURBED SOIL

DATE	REVISION	DATE FILMED
2-27-14	REVISED GENERAL NOTE 1.	
12-15-11	REV GENERAL NOTES & MINIMUM COVER NOTE; DELETED SM3 MATERIAL	
11-17-10	ISSUED	

ARKANSAS STATE HIGHWAY COMMISSION

PLASTIC PIPE CULVERT (PVC F949)

STANDARD DRAWING PCP-2

INSTALLATION TYPE	**MATERIAL REQUIREMENTS FOR STRUCTURAL BACKFILL AND STRUCTURAL BEDDING
TYPE 1	AGGREGATE BASE COURSE (CLASS 4, 5, 6, OR 7)
TYPE 2	*SELECTED MATERIALS (CLASS SM-1, SM-2 OR SM-4) OR TYPE 1 INSTALLATION MATERIAL

*SM3 WILL NOT BE ALLOWED.

** STRUCTURAL BEDDING MATERIAL SHALL HAVE A MAXIMUM PARTICLE SIZE OF 1INCH. STRUCTURAL BACKFILL MATERIAL SHALL BE FREE OF ORGANIC MATERIAL, STONES LARGER THAN 1.50 INCH IN GREATEST DIMENSION, OR FROZEN LUMPS.

STRUCTURAL BACKFILL AND STRUCTURAL BEDDING MATERIAL WILL NOT BE PAID FOR SEPARATELY, BUT COMPENSATION WILL BE CONSIDERED TO BE INCLUDED IN THE PRICE BID PER LINEAR FOOT OF POLYPROPYLENE PIPE.

MULTIPLE INSTALLATION OF POLYPROPYLENE PIPES

PIPE DIAMETER	CLEAR DISTANCE BETWEEN PIPES
18"	1'-6"
24"	2'-0"
30"	2'-6"
36"	3'-0"
42"	3'-6"
48"	4'-0"
60"	5'-0"

MINIMUM TRENCH WIDTH BASED ON FILL HEIGHT "H"

PIPE DIAMETER	TRENCH WIDTH (FEET)	
	"H" < 10'-0"	"H" >OR= 10'-0"
18"	4'-6"	4'-6"
24"	5'-0"	6'-0"
30"	5'-6"	7'-6"
36"	6'-0"	9'-0"
42"	7'-0"	10'-6"
48"	8'-0"	12'-0"
60"	10'-0"	15'-0"

①NOTE:
12" MIN. (18" - 42" DIAMETERS)
24" MIN. (60" DIAMETER)

MINIMUM COVER VALUES, "H" SHALL INCLUDE A MINIMUM 12" OF PAVEMENT AND/OR BASE.

MAXIMUM HEIGHT OF FILL "H"

PIPE DIAMETER	INSTALLATION TYPE	
	TYPE 1	TYPE 2
18"	18'	14'
24"	16'	12'
30"	18'	14'
36"	16'	12'
42"	18'	13'
48"	15'	11'
60"	17'	12'

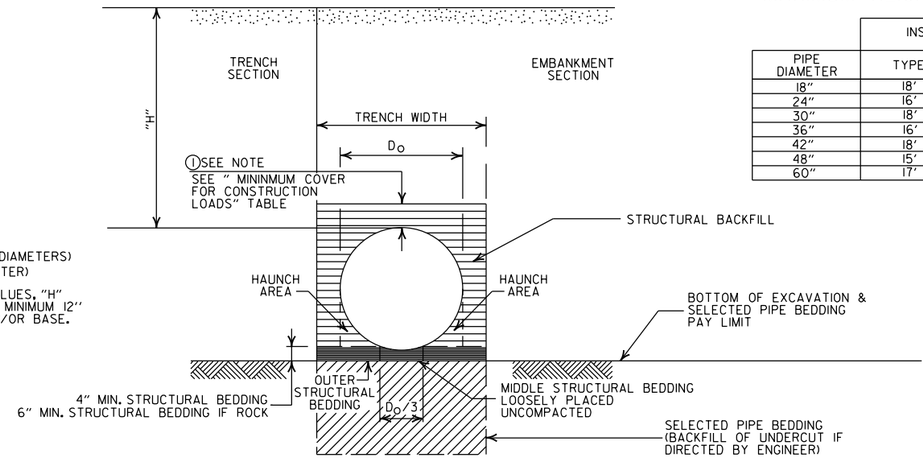

MINIMUM COVER FOR CONSTRUCTION LOADS

PIPE DIAMETER	② MIN. COVER (FEET) FOR INDICATED CONSTRUCTION LOADS			
	18.0-50.0 (KIPS)	50.0-75.0 (KIPS)	75.0-110.0 (KIPS)	110.0-150.0 (KIPS)
36" OR LESS	2'-0"	2'-6"	3'-0"	3'-0"
42" OR GREATER	3'-0"	3'-0"	3'-6"	4'-0"

②MINIMUM COVER SHALL BE MEASURED FROM TOP OF PIPE TO TOP OF THE MAINTAINED CONSTRUCTION ROADWAY SURFACE. THE SURFACE SHALL BE MAINTAINED.

EMBANKMENT AND TRENCH INSTALLATIONS

1. STRUCTURAL BACKFILL, EMBANKMENT, AND OUTER STRUCTURAL BEDDING MATERIAL SHALL BE COMPACTED TO 95% OF THE MAXIMUM DENSITY ACCORDING TO THE TYPE OR CLASS OF MATERIAL USED.

CONSTRUCTION SEQUENCE

1. PLACE STRUCTURAL BEDDING MATERIAL TO GRADE. DO NOT COMPACT.
2. INSTALL PIPE TO GRADE.
3. COMPACT STRUCTURAL BEDDING OUTSIDE THE MIDDLE THIRD OF THE PIPE.
4. THE STRUCTURAL BACKFILL SHALL BE PLACED AND COMPACTED IN LAYERS NOT EXCEEDING 8". THE LAYERS SHALL BE BROUGHT UP EVENLY AND SIMULTANEOUSLY TO THE ELEVATION OF THE MINIMUM COVER.
5. PIPE INSTALLATION MAY REQUIRE THE USE OF RESTRAINTS, WEIGHTING OR OTHER APPROVED METHODS IN ORDER TO HELP MAINTAIN GRADE AND ALIGNMENT.

GENERAL NOTES

1. PIPE SHALL CONFORM TO AASHTO M330, TYPE S, INSTALLATION SHALL CONFORM TO JOB SPECIAL PROVISION "PLASTIC PIPE" AND SECTION 606 OF THE STANDARD SPECIFICIATIONS FOR HIGHWAY CONSTRUCTION (CURRENT EDITION).
2. PLASTIC PIPE CULVERT DESIGN SHALL CONFORM TO AASHTO LRFD BRIDGE DESIGN SPECIFICATIONS, SIXTH EDITION (2012) WITH 2013 INTERIMS.
3. THE MAXIMUM ALLOWABLE TRENCH WIDTH SHALL BE THE MINIMUM WIDTH PLUS A SUFFICIENT WIDTH TO ENSURE WORKING ROOM TO PROPERLY AND SAFELY PLACE AND COMPACT HAUNCHING AND OTHER BACKFILL MATERIAL.
4. IMPERVIOUS MATERIAL SHOULD BE PLACED AS DIRECTED BY THE ENGINEER AT THE ENDS OF THE CULVERT TO PREVENT LOSS OF STRUCTURAL BEDDING WHEN PERVIOUS MATERIAL IS USED FOR STRUCTURAL BEDDING AND/OR BACKFILL.
5. WHEN DIRECTED BY THE ENGINEER, UNSUITABLE MATERIAL THAT IS ENCOUNTERED AT THE BOTTOM OF THE EXCAVATED TRENCH (BELOW THE AREA IDENTIFIED AS "STRUCTURAL BEDDING" ABOVE) WILL BE EXCAVATED AND REPLACED WITH SELECTED PIPE BEDDING. THE QUANTITY OF MATERIAL REQUIRED TO BACKFILL THE UNDERCUT AREA UP TO THE SELECTED PIPE BEDDING PAY LIMIT DESIGNATED ABOVE WILL BE MEASURED AND PAID FOR AS "SELECTED PIPE BEDDING."
6. WHEN THE EXISTING MATERIAL EXCAVATED FOR THE PIPE TRENCH IS DETERMINED BY THE ENGINEER TO BE UNSUITABLE FOR BACKFILLING THE PIPE (ABOVE THE AREA IDENTIFIED ABOVE AS STRUCTURAL BACKFILL), BORROW MATERIAL OR MATERIAL FROM THE ROADWAY EXCAVATION WILL BE USED TO BACKFILL THE PIPE. IF SUITABLE MATERIAL IS NOT AVAILABLE, THE ENGINEER MAY AUTHORIZE THE USE OF "SELECTED PIPE BACKFILL."
7. FOR PIPE TYPES THAT ARE NOT SMOOTH ON THE OUTSIDE (CORRUGATED OR PROFILE WALLS), BACKFILL GRADATIONS SHOULD BE SELECTED THAT WILL PERMIT THE FILLING OF THE CORRUGATION OR PROFILE VALLEY.
8. POLYPROPYLENE PIPES OF DIAMETERS OTHER THAN SHOWN WILL NOT BE ALLOWED.
9. JOINTS FOR POLYPROPYLENE PIPE SHALL MEET THE REQUIREMENTS FOR SOIL TIGHTNESS AS SPECIFIED IN SECTION 26.4.2.4 AND 30.4.2 OF THE AASHTO LRFD BRIDGE CONSTRUCTION SPECIFICATIONS 3RD EDITION (2010) WITH 2012 INTERIMS. JOINTS SHALL BE INSTALLED PER MANUFACTURER'S RECOMMENDATIONS.

- LEGEND -

H = FILL HEIGHT (FT.)
D_O = OUTSIDE DIAMETER OF PIPE
MAX. = MAXIMUM
MIN. = MINIMUM

= STRUCTURAL BACKFILL MATERIAL

= UNDISTURBED SOIL

DATE	REVISION	DATE FILMED
02-27-20	REVISED	
11-07-19	ISSUED	

ARKANSAS STATE HIGHWAY COMMISSION

PLASTIC PIPE CULVERT (POLYPROPYLENE)

STANDARD DRAWING PCP-3

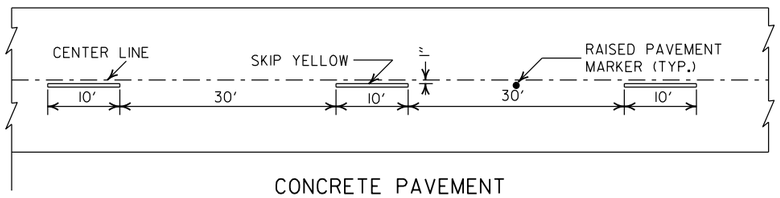

CONCRETE PAVEMENT

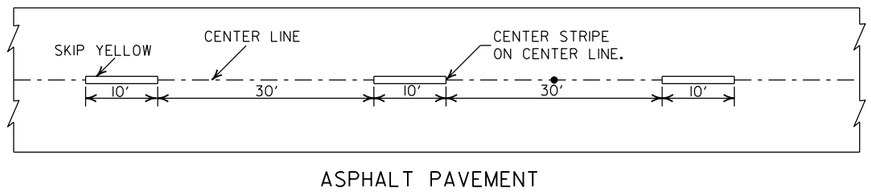

ASPHALT PAVEMENT

BROKEN LINE STRIPING

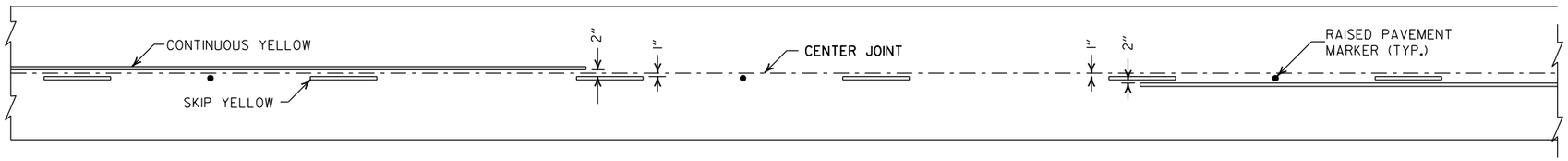

SOLID LINE STRIPING ON CONCRETE PAVEMENT

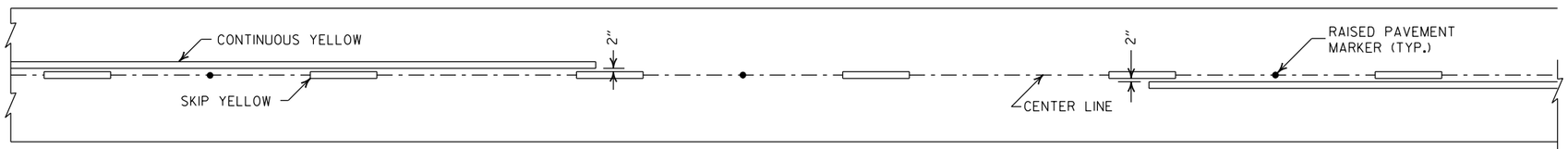

SOLID LINE STRIPING ON ASPHALT PAVEMENT

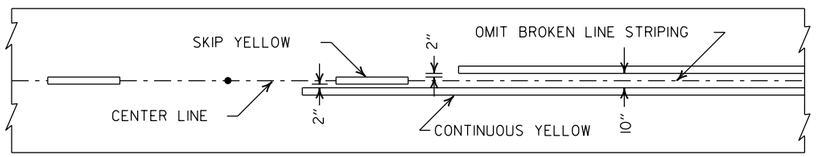

ASPHALT PAVEMENT

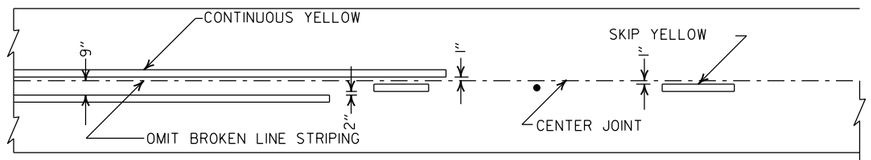

CONCRETE PAVEMENT

STRIPING AT ADJACENT NO PASSING LANES

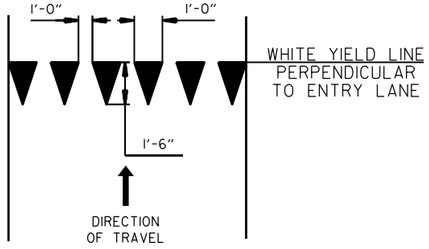

YIELD LINE DETAIL

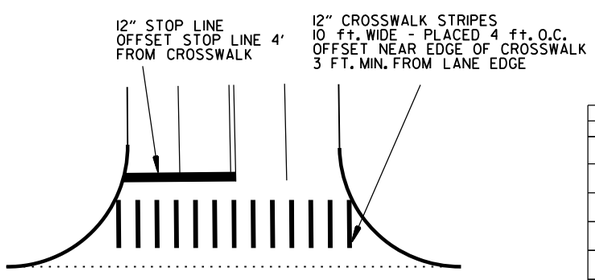

CROSSWALK AND STOP LINE DETAILS

NOTES:
1. REFER TO THE STRIPING DETAILS FOR PAVEMENT MARKING LINE WIDTHS.
2. THIS DRAWING SHALL BE USED IN CONJUNCTION WITH THE LATEST REVISED ADDITION OF THE "MANUAL ON UNIFORM TRAFFIC CONTROL DEVICES."
3. RAISED PAVEMENT MARKERS SHALL BE PLACED ON AN 80 FEET SPACING UNLESS OTHERWISE SHOWN IN THE PLANS.

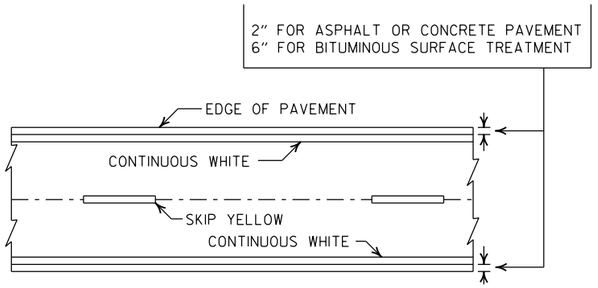

PAVEMENT EDGE LINE MARKING

NOTE:
THE RED LENS OF THE TYPE II R.P.M. SHALL FACE THE INCORRECT TRAFFIC MOVEMENT.

TYPE II
RED/CLEAR OR
YELLOW/YELLOW

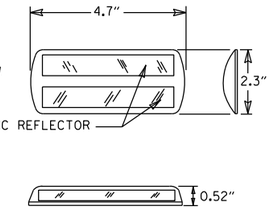

NOTE:
DIMENSIONS SHOWN FOR RAISED PAVEMENT MARKERS ARE TYPICAL. THE CONTRACTOR MAY SUBSTITUTE SIMILAR MARKERS WITH THE APPROVAL OF THE ENGINEER. REQUESTING APPROVAL FOR SIMILAR MARKERS MAY BE MADE BY REFERRING TO THE ARDOT QUALIFIED PRODUCTS LIST.

DETAIL OF STANDARD RAISED PAVEMENT MARKERS

DATE	REVISION	FILMED
2-27-20	REVISED STOP LINE DETAILS	
6-1-17	ADDED YIELD LINE DETAIL	
5-12-16	REVISED LINE WIDTHS, SPACING, & NOTES	
9-12-13	REVISED DETAIL OF STANDARD RAISED PAVEMENT MARKERS	
11-17-10	REVISED GENERAL NOTES & REMOVED PLOWABLE PVMT MRKRS	
11-18-04	REVISED NOTE 2 & GENERAL NOTES	
8-22-02	ADDED CROSSWALK & STOPBAR DTLS.	
7-02-98	ADDED DETAILS OF STD. RAISED PAV'T. MARKERS	
4-26-96	REV. NOTES 3&4; ADDED R.P.M.	
9-30-80	DRAWN	1-9-30-80

ARKANSAS STATE HIGHWAY COMMISSION

PAVEMENT MARKING DETAILS

STANDARD DRAWING PM-1

NOTE:

1. UNLESS OTHERWISE SPECIFIED ON THE PLANS, THE UNDERDRAIN COVER SHALL BE THOROUGHLY COMPACTED EARTH AND SHALL BE SUBSIDIARY TO PIPE UNDERDRAIN.

2. GRANULAR MATERIAL SHALL BE WRAPPED WITH GEOTEXTILE FABRIC. LAP FABRIC 12" OR THE WIDTH OF THE TRENCH AT THE TOP.

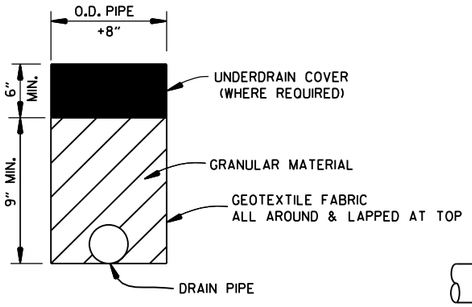

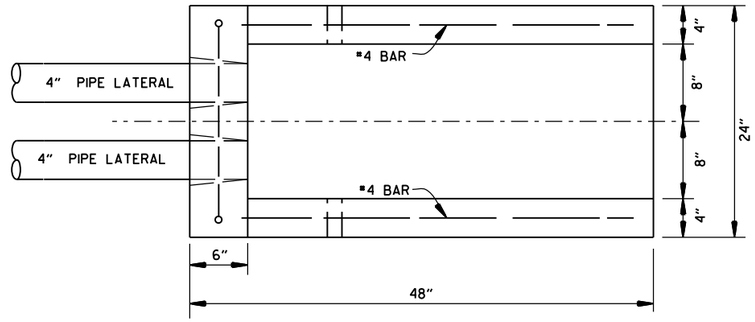

PLAN VIEW

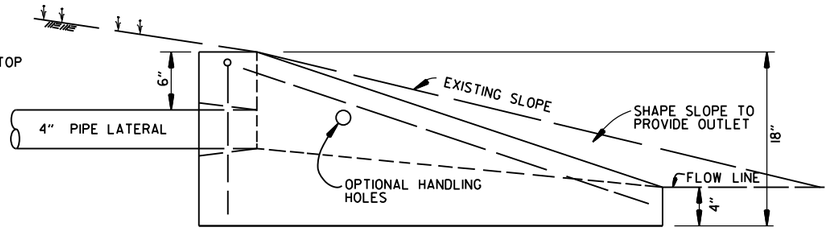

SIDE VIEW

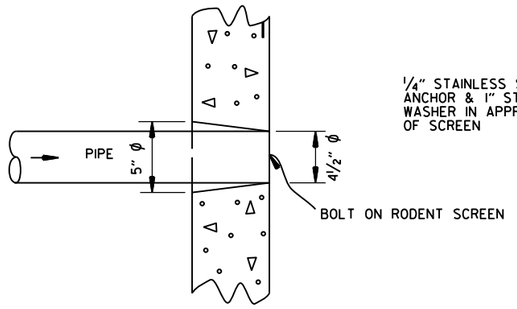

DETAIL OF HOLE
FOR 4" PIPE

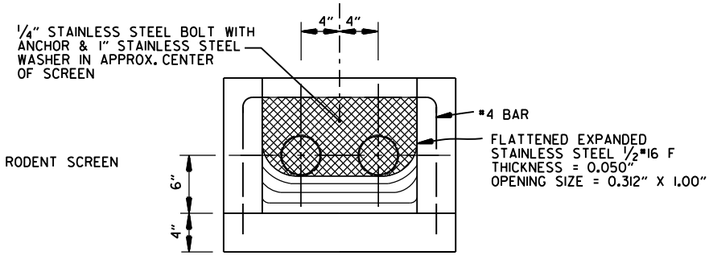

FRONT VIEW
(DETAIL OF RODENT SCREEN)

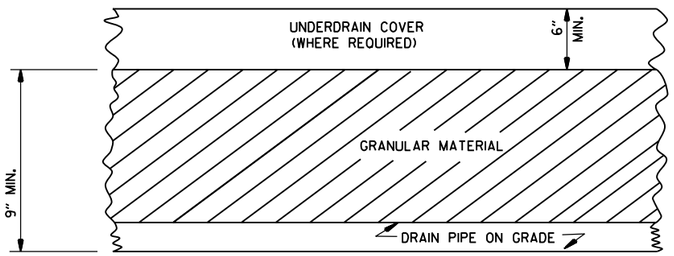

DETAILS OF PIPE UNDERDRAIN

NOTES FOR PIPE UNDERDRAINS

1. GEOTEXTILE FABRIC SHALL MEET THE REQUIREMENTS OF SECTION 625 FOR TYPE 1. PAYMENT FOR GEOTEXTILE FABRIC AND GRANULAR FILTER MATERIAL SHALL BE INCLUDED IN THE PRICE BID PER LIN. FT. FOR "4" PIPE UNDERDRAINS" IN ACCORDANCE WITH SECTION 611 OF THE STANDARD SPECIFICATIONS.

2. 4" NON-PERFORATED SCHEDULE 40 PVC PIPE LATERALS WITH OUTLET PROTECTORS SHALL BE INSTALLED AS SHOWN HEREON. LATERALS WILL BE MEASURED AND PAID FOR AS "4" PIPE UNDERDRAINS." UNDERDRAIN OUTLET PROTECTORS WILL BE MEASURED AND PAID FOR BY THE UNIT IN ACCORDANCE WITH SECTION 611 OF THE STANDARD SPECIFICATIONS.

3. EXISTING 4" PIPE UNDERDRAINS MAY BE CONNECTED TO PROPOSED DROP INLETS OR EXTENDED WHERE DIRECTED BY THE ENGINEER. PAYMENT FOR CONNECTING TO DROP INLETS SHALL BE CONSIDERED INCLUDED IN THE PRICE BID FOR "4" PIPE UNDERDRAINS."

4. THE LOCATION OF ALL LATERALS SHALL BE MARKED WITH 4" X 12" PERMANENT PAVEMENT MARKING TAPE (TYPE III WHITE) AT THE OUTSIDE EDGE OF THE SHOULDER, PLACED TRANSVERSE TO TRAFFIC. PAYMENT FOR THIS WORK SHALL BE INCLUDED IN THE PRICE BID FOR THE VARIOUS CONTRACT ITEMS.

5. PAYMENT FOR THE RODENT SCREEN SHALL BE INCLUDED IN THE PRICE BID PER EACH FOR "UNDERDRAIN OUTLET PROTECTORS."

6. ANY EXISTING UNDERDRAINS THAT INTERFERE WITH INSTALLATION OF THE NEW UNDERDRAIN SYSTEM SHALL BE REMOVED AND DISPOSED OF AS DIRECTED BY THE ENGINEER. PAYMENT WILL BE CONSIDERED INCLUDED IN THE PRICE BID FOR THE VARIOUS CONTRACT ITEMS. EXISTING UNDERDRAIN OUTLET PROTECTORS SHALL BE REMOVED UNDER THE ITEM "REMOVAL AND DISPOSAL OF UNDERDRAIN OUTLET PROTECTORS."

7. AT LOCATIONS WHERE A SINGLE LATERAL IS USED THE CONTRACTOR SHALL HAVE THE FOLLOWING OPTIONS: 1. INSTALL OUTLET PROTECTOR AS SHOWN ON STANDARD DRAWING PU-1 AND GROUT THE UNUSED HOLE OR 2. INSTALL AN OUTLET PROTECTOR WITH A SINGLE HOLE.

UNDERDRAIN OUTLET PROTECTORS

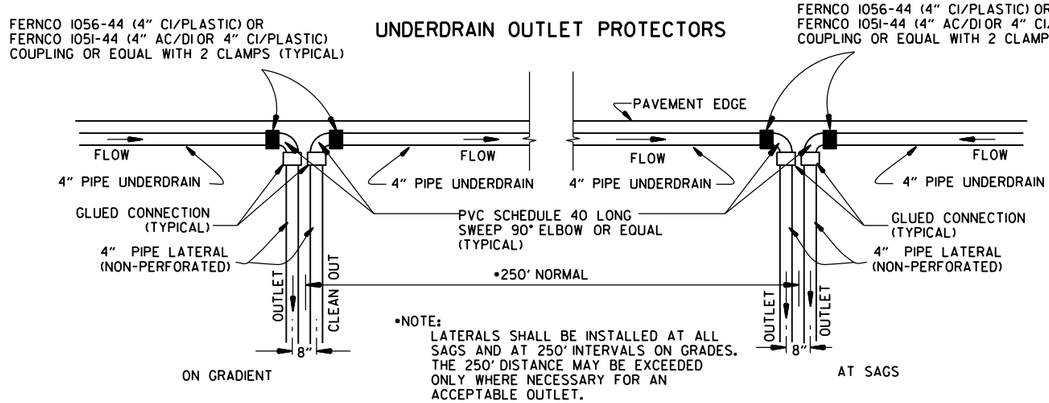

DETAIL OF PIPE UNDERDRAIN LATERALS
WHEN PLACED ALONG PAVEMENT EDGE

NOTE: PVC PIPE FOR LATERALS SHALL MEET THE REQUIREMENTS OF ASTM D 1785 (LATEST REVISION) FOR SCHEDULE 40 PIPE.

DATE	REVISION	DATE FILMED
12-8-16	ADDED NOTES FOR PIPE UNDERDRAINS, REVISED RODENT SCREEN DETAIL AND NOTES, REMOVED NOTE 1 FOR GRANULAR MATERIAL, ADDED NOTE FOR GEOTEXTILE FABRIC	
4-10-03	REVISED NOTE 3	
1-12-00	REVISED DETAIL OF UNDERDRAIN LATERALS	
11-18-98	REVISED NOTE	
10-18-96	REVISED MIN. DEPTH & GEOTEXTILE FABRIC	
4-26-96	ADDED LATERAL NOTE; 5½" TO 5"	
11-22-95	REVISED LATERALS	
7-20-95	REVISED LATERALS & ADDED NOTE	
11- 3-94	REVISED FOR DUAL LATERALS	11- 3-94
10- 1-92	SUBSTITUTED GEOTEXTILE	10- 1-92
8-15-91	ADDED POLYEDTHYLENE PIPE	8-15-91
11- 8-90	DELETED ALTERNATE NOTE	11- 8-90
1-25-90	ADDED 4" SNAP ADAPTER	1-25-90
11-30-89	DEL. (SUBGRADE); ADDED (WHERE REQUIRED)	11-30-89
7-15-88	ISSUED P.L.M.	647-7-15-88

ARKANSAS STATE HIGHWAY COMMISSION

DETAILS OF PIPE UNDERDRAIN

STANDARD DRAWING PU-1

STEEL FABRICATION: REINFORCING STEEL FABRICATION SHALL CONFORM TO THE DIMENSIONS LISTED IN THE TABLE BELOW:

BAR SIZE	PIN DIAMETER	HOOK EXTENSION "K"
3	2¼"	4"
4	3 "	4½"
5	3¾"	5"
6	4½"	6"
7	5¼"	7"
8	6"	8"

IF THE OVERALL HEIGHT OF THE HOOK (SEE DIAGRAM BELOW) FOR A "b", "b1", "b2" or "b3" BENT BAR IS GREATER THAN THE CORRESPONDING TOP OR BOTTOM SLAB THICKNESS, LESS 2¾ INCHES, EACH BENT BAR SHALL BE REPLACED WITH ONE HOOKED BAR AND ONE STRAIGHT BAR, USING LENGTHS AS SHOWN IN THE TABLE BELOW. THE TWO BARS SHALL BE THE SAME DIAMETER AS, AND PLACED AT THE SAME SPACING AS, THE "b", "b1", "b2" OR "b3" BENT BARS THEY REPLACE.

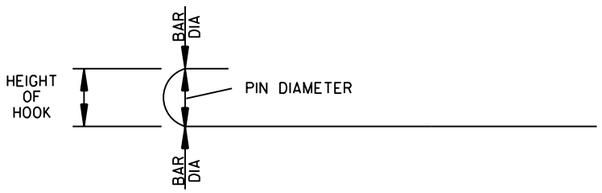

NOTE: DIMENSIONS OF BARS ARE MEASURED OUT TO OUT OF BARS.

OVERALL HEIGHT OF HOOKED BAR DIAGRAM

THE HOOKED BARS SHALL BE PLACED IN THE BOTTOM OF THE TOP SLAB AND THE TOP OF THE BOTTOM SLAB. THE STRAIGHT BARS SHALL BE PLACED IN THE TOP OF THE TOP SLAB AND THE BOTTOM OF THE BOTTOM SLAB. SEE TABLE BELOW FOR LENGTHS OF REPLACEMENT HOOKED AND STRAIGHT BARS.

FOR SKEWED CULVERTS, THE REPLACEMENT STRAIGHT BAR MAY HAVE TO BE CUT IN FIELD TO FIT.

REPLACEMENT BAR LENGTHS TABLE

BAR SIZE: "b", "b1", "b2" OR "b3"	LENGTH OF HOOKED BAR	LENGTH OF STRAIGHT BAR
#4	L + 1' - 0"	SEE "c" BAR LENGTH
#5	L + 1' - 2"	SEE "c" BAR LENGTH
#6	L + 1' - 4"	SEE "c" BAR LENGTH
#7	L + 1' - 8"	SEE "c" BAR LENGTH
#8	L + 1' - 10"	SEE "c" BAR LENGTH
#9	L + 2' - 6"	SEE "c" BAR LENGTH

L = "OW" - 3 INCHES

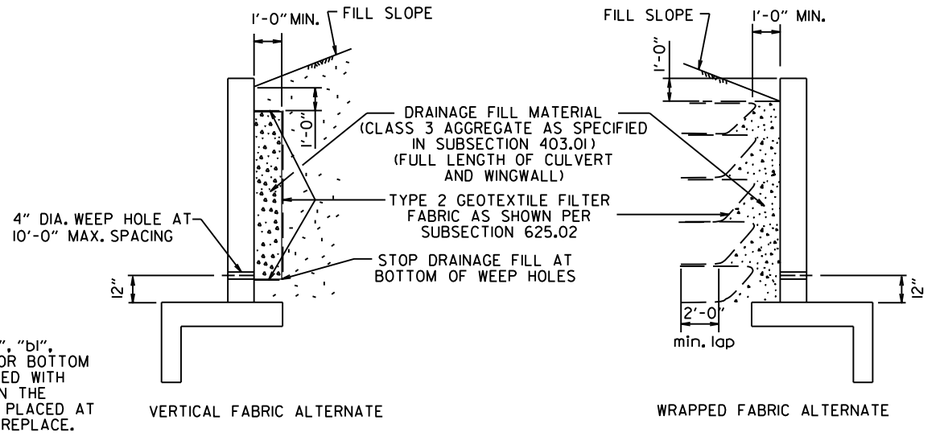

WINGWALL & CULVERT DRAINAGE DETAIL

REINFORCED CONCRETE BOX CULVERT GENERAL NOTES

CONCRETE SHALL BE CLASS S WITH A MINIMUM 28 DAY COMPRESSIVE STRENGTH OF 3500 PSI.

REINFORCING STEEL SHALL BE AASHTO M 31 OR M 53, GRADE 60.

CONSTRUCTION AND MATERIALS FOR WINGWALL & CULVERT DRAINAGE, INCLUDING WEEP HOLES AND GRANULAR MATERIAL, SHALL BE SUBSIDIARY TO THE BID ITEM, "CLASS S CONCRETE".

MEMBRANE WATERPROOFING SHALL CONFORM TO THE REQUIREMENTS OF SECTION 815 OF THE STANDARD SPECIFICATIONS.

MEMBRANE WATERPROOFING SHALL BE APPLIED TO ALL CONSTRUCTION JOINTS IN THE TOP SLAB AND THE SIDEWALLS OF R.C. BOX CULVERTS AS DIRECTED BY THE ENGINEER. NO PAYMENT SHALL BE MADE FOR THIS ITEM, BUT PAYMENT WILL BE CONSIDERED TO BE INCLUDED IN THE VARIOUS ITEMS BID FOR THE R.C. BOX CULVERT.

REINFORCING STEEL TOLERANCES: THE TOLERANCES FOR REINFORCING STEEL SHALL MEET THOSE LISTED IN "MANUAL OF STANDARD PRACTICE" PUBLISHED BY CONCRETE REINFORCING STEEL INSTITUTE (CRSI) EXCEPT THAT THE TOLERANCE FOR TRUSS BARS SUCH AS FIGURE 3 ON PAGE 7-4 OF THE CRSI MANUAL SHALL BE MINUS ZERO TO PLUS ½ INCH.

WEEP HOLES IN BOX CULVERT WALLS SHALL HAVE A MAXIMUM HORIZONTAL SPACING OF 10'-0" AND SHALL BE SPACED TO CLEAR ALL REINFORCING STEEL. THE DRAIN OPENING SHALL BE 4" DIAMETER AND SHALL BE PLACED 12" ABOVE THE TOP OF THE BOTTOM SLAB.

WEEP HOLES IN WINGWALLS SHALL HAVE A MAXIMUM HORIZONTAL SPACING OF 10'-0" AND SHALL BE SPACED TO CLEAR ALL REINFORCING STEEL. THERE SHALL BE A MINIMUM OF TWO (2) WEEP HOLES IN EACH WINGWALL. THE DRAIN OPENING SHALL BE 4" DIAMETER AND SHALL BE PLACED 12" ABOVE THE TOP OF THE WINGWALL FOOTING.

THE REQUIREMENTS SHOWN ON THIS DRAWING SHALL SUPERCEDE THE CORRESPONDING REQUIREMENTS ON ALL REINFORCED CONCRETE BOX CULVERT STANDARD DRAWINGS.

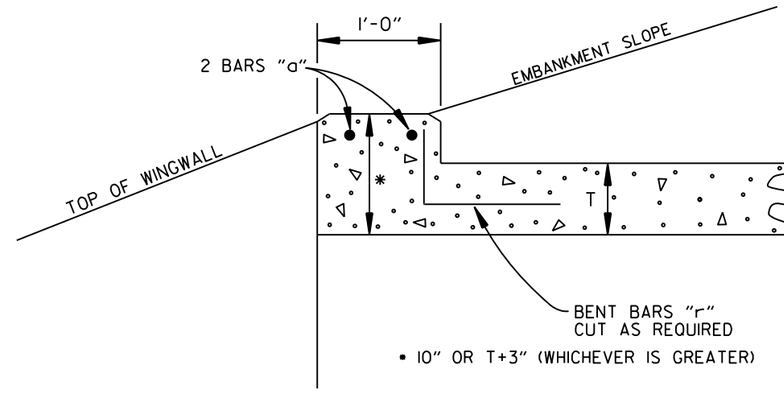

NOTE: FOR ALL SKEWED R.C. BOX CULVERTS THE LENGTH "K" OF THE MODIFIED HEADWALL SHALL BE EQUAL TO THE ROADWAY LENGTH "RL". THE ENDS OF THE HEADWALL SHALL BE CONSTRUCTED PARALLEL TO THE SKEW ANGLE OF THE BOX CULVERT.

R.C. BOX CULVERT HEADWALL MODIFICATIONS

DATE	REVISION	DATE FILMED
7/26/12	REV. DRAINAGE FILL MATERIAL & DETAIL	
12/15/11	REQUIRE WEEP HOLES IN BOX CULVERT WALLS	
5-25-06	REV. GEN. NOTES AND DETAILS FOR WEEP HOLES; BAR DIAGRAM	
11-16-01	ADDED WINGWALL DRAINAGE DETAIL/EDITED GEN. NOTES	
10-18-96	REV. ASTM REF. TO AASHTO & ADDED BAR DIAGRAM	
10-12-95	MOVED SOLID SODDING DETAIL TO RCB-2	
6-2-94	ADDED SOLID SODDING PLAN DETAIL	
8-5-93	REVISED PIN DIAMETER TO SPECS.	
8-15-91	DRAWN AND ISSUED	

ARKANSAS STATE HIGHWAY COMMISSION

REINFORCED CONCRETE BOX CULVERT DETAILS

STANDARD DRAWING RCB-1

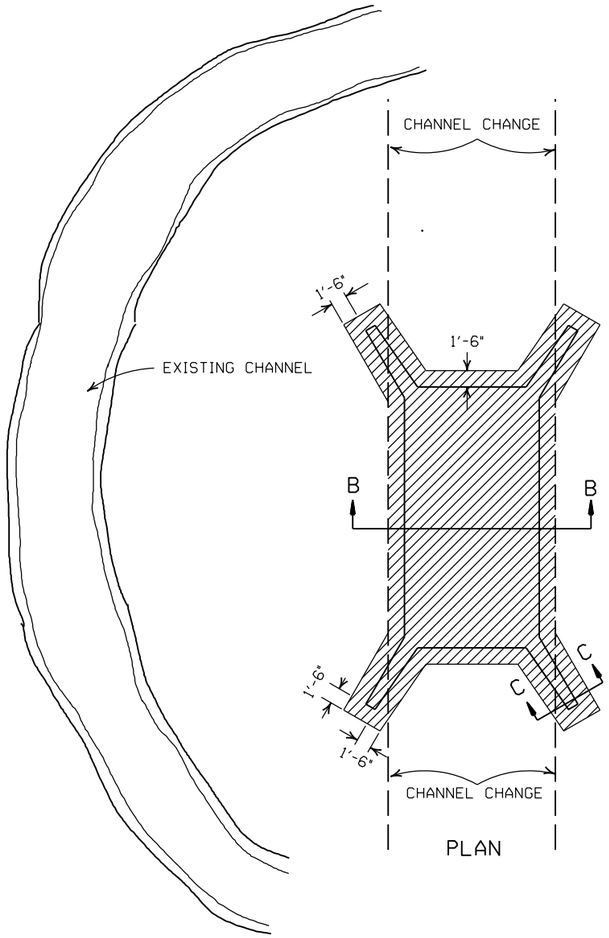

PLAN

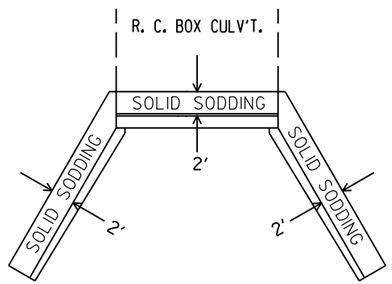

PLAN

PARTIAL SECTION SHOWING SOLID SODDING AT HEADWALLS AND WING WALLS

NOTE: LENGTH MEASURED ALONG THE CENTER OF 2' STRIP OF SOLID SODDING.

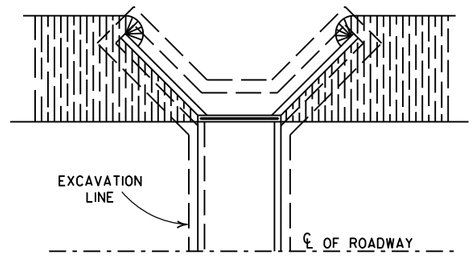

PLAN

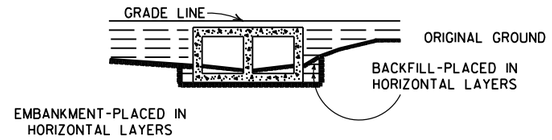

LONGITUDINAL SECTION

BACKFILL DETAILS FOR BOX CULVERT

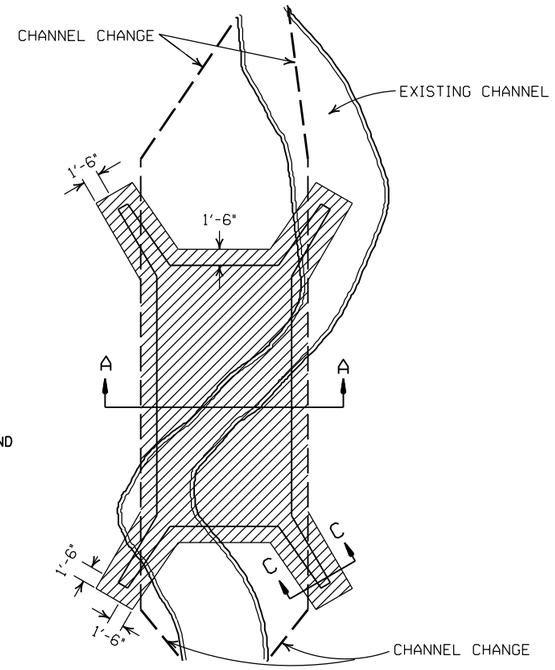

PLAN

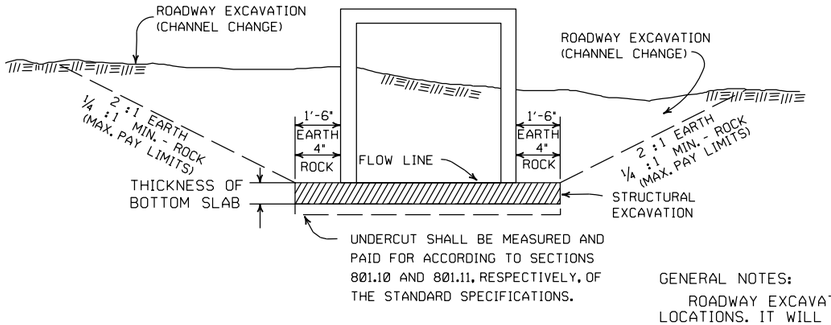

SECTION B-B

DETAILS FOR NEW CHANNELS

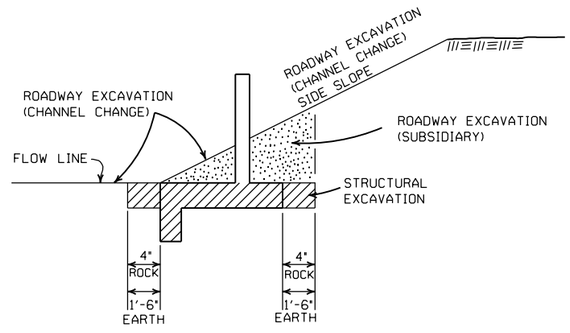

SECTION C-C

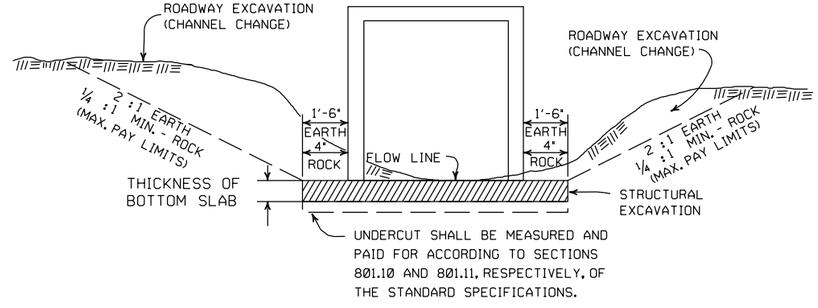

SECTION A-A

DETAILS THROUGH EXISTING CHANNELS

GENERAL NOTES:

ROADWAY EXCAVATION (CHANNEL CHANGE) WILL BE PAID FOR AT R.C. BOX CULVERT LOCATIONS. IT WILL BE PAID TO THE LIMITS ACTUALLY CUT AND WILL BE CONFINED TO THAT PORTION OF THE INDICATED AREA THAT IS ABOVE THE FLOW LINE. ROADWAY EXCAVATION (CHANNEL CHANGE) SHALL BE MEASURED BY CROSS SECTIONS AND VOLUMES COMPUTED BY AVERAGE END AREA METHOD. ALL CHANNEL CHANGES SHALL BE BROUGHT TO GRADE PRIOR TO MAKING ANY EXCAVATION FOR STRUCTURES.

EXCAVATION FOR STRUCTURES WILL BE PAID FOR AT ALL R.C. BOX CULVERT LOCATIONS. IT WILL BE PAID TO THE LIMITS SHOWN AND SHALL BE CONFINED TO THAT PORTION OF THE INDICATED AREA THAT IS BELOW THE CHANNEL FLOW LINE.

ROADWAY EXCAVATION SHOWN IN SECTION C-C ABOVE AS SUBSIDIARY WILL NOT BE MEASURED OR PAID FOR DIRECTLY, BUT PAYMENT WILL BE CONSIDERED TO BE INCLUDED IN THE VARIOUS ITEMS OF EXCAVATION.

DATE	REVISION	FILMED
11-20-03	REVISED SECTION A-A NOTE	
8-22-02	REVISED SECTION B-B NOTE	
10-12-95	COMBINED 1891B AND 1888A	
1-4-83	REVISED GENERAL NOTES	674-1-4-83
	AND ADDED MAXIMUM PAY	
	LIMIT NOTES.	
2-2-76	EXCAV. PAY LIMITS	917-2-2-76
10-2-72	REVISED AND REDRAWN	564-10-16-72

ARKANSAS STATE HIGHWAY COMMISSION

EXCAVATION PAY LIMITS, BACKFILL, & SOLID SODDING FOR BOX CULVERTS

STANDARD DRAWING RCB-2

SUPERELEVATION TABLE FOR TWO - WAY TRAFFIC

DEGREE OF CURVE	30 MPH			35 MPH			40 MPH			45 MPH			50 MPH			55 MPH			60 MPH			65 MPH			70 MPH			75 MPH		
	e	Ls (FT)		e	Ls (FT)		e	Ls (FT)		e	Ls (FT)		e	Ls (FT)		e	Ls (FT)		e	Ls (FT)		e	Ls (FT)		e	Ls (FT)		e	Ls (FT)	
		MINIMUM	DESIRABLE		MINIMUM	DESIRABLE		MINIMUM	DESIRABLE		MINIMUM	DESIRABLE		MINIMUM	DESIRABLE		MINIMUM	DESIRABLE		MINIMUM	DESIRABLE		MINIMUM	DESIRABLE		MINIMUM	DESIRABLE		MINIMUM	DESIRABLE
0° 15'	NC			NC			NC			NC			NC			NC			NC			NC			NC			NC		
0° 30'	NC			NC			NC			NC			NC			NC			RC	96		RC	96		RC	96		0.022	101	
0° 45'	NC			NC			NC			NC			RC	96		RC	96		0.024	106		0.026	110		0.030	120		0.032	125	
1° 00'	NC			NC			NC			RC	90		0.022	101		0.026	110		0.030	120		0.034	130		0.038	139	300	0.042	149	300
1° 15'	NC			NC			RC	84		0.022	95		0.028	115		0.032	125		0.038	139		0.042	149		0.046	158		0.052	173	
1° 30'	NC			RC	78		0.022	88		0.028	108		0.032	125		0.038	139		0.044	154		0.050	168	300	0.056	182		0.062	197	
1° 45'	RC	72		RC	78		0.026	97		0.030	113		0.036	134		0.044	154		0.050	168	300	0.056	182		0.064	202		0.070	216	
2° 00'	RC	72		0.024	86		0.028	101		0.034	122		0.042	149		0.048	163		0.056	182		0.064	202		0.070	216		0.080	240	
2° 15'	RC	72		0.026	90		0.032	109		0.038	131		0.046	158		0.054	178	300	0.062	197		0.070	216		0.078	235	350	0.088	259	350
2° 30'	0.022	75		0.028	94		0.034	113		0.042	140		0.050	168		0.058	187		0.068	211		0.076	230		0.086	254		0.096	278	
2° 45'	0.024	79		0.030	98		0.038	122		0.046	149	200	0.054	178		0.064	202		0.072	221		0.082	245		0.092	269		0.100	288	400
3° 00'	0.026	83		0.034	105		0.040	126		0.050	158		0.058	187	250	0.068	211		0.078	235		0.088	259		0.098	283	400	D MAX = 2° 45'		
3° 15'	0.028	86		0.036	109		0.044	134		0.052	162		0.062	197		0.072	221		0.082	245		0.092	269		0.100	288				
3° 30'	0.030	90		0.038	113		0.046	139	200	0.056	171		0.066	206		0.076	230		0.086	254		0.096	278	350	D MAX = 3° 30'					
3° 45'	0.032	93		0.040	117		0.050	147		0.058	176		0.070	216		0.080	240		0.090	264		0.098	283							
4° 00'	0.034	97		0.042	121	200	0.052	151		0.062	185		0.072	221		0.084	250		0.094	274	350	0.100	288							
4° 15'	0.036	100		0.044	125		0.054	155		0.064	189		0.076	230		0.086	254	350	0.096	278		D MAX = 4° 15'								
4° 30'	0.036	100		0.046	129		0.056	160		0.068	198		0.078	235		0.090	264		0.098	283										
4° 45'	0.038	104	200	0.048	133		0.060	168		0.070	203		0.082	245		0.092	269		0.100	288										
5° 00'	0.040	108		0.050	137		0.062	172		0.072	207		0.084	250		0.094	274		D MAX = 5° 15'										
5° 30'	0.044	115		0.054	144		0.066	181		0.078	221	250	0.088	259		0.098	283												
6° 00'	0.046	119		0.058	152		0.070	189		0.082	230		0.092	269		0.100	288												
6° 30'	0.050	126		0.062	160		0.074	198		0.086	239		0.096	278	300	D MAX = 6° 30'													
7° 00'	0.052	130		0.064	164		0.078	206		0.090	248		0.098	283															
7° 30'	0.054	133		0.068	172		0.080	210		0.092	252		0.100	288															
8° 00'	0.058	140		0.070	176		0.084	219		0.094	257	300	D MAX = 8° 25'																
8° 30'	0.060	144		0.072	179		0.086	223	250	0.096	261																		
9° 00'	0.062	148		0.076	187		0.088	227		0.098	266																		
9° 30'	0.064	151		0.078	191		0.092	235		0.100	270																		
10° 00'	0.066	155		0.080	195		0.094	240		D MAX = 10° 30'																			
11° 00'	0.070	162		0.084	203		0.096	244																					
12° 00'	0.074	169		0.088	211	250	0.098	248																					
13° 00'	0.076	173		0.090	215		0.100	252	300	D MAX = 13° 45'																			
14° 00'	0.080	180		0.094	222																								
15° 00'	0.082	184		0.096	226																								
16° 00'	0.086	191		0.098	230																								
17° 00'	0.088	194		0.100	234																								
18° 00'	0.090	198	250	D MAX = 19° 30'																									
19° 00'	0.092	202																											
20° 00'	0.094	205																											
21° 00'	0.096	209																											
22° 00'	0.096	209																											
23° 00'	0.098	212																											
24° 00'	0.098	212																											
25° 00'	0.100	216																											
D MAX = 28° 30'																													

ABBREVIATIONS

NC - NORMAL CROWN
RC - REVERSE CROWN, SUPERELEVATION AT NORMAL CROWN SLOPE
e - RATE OF SUPERELEVATION (FT. PER FT.)
Ls - LENGTH OF SUPERELEVATION TRANSITION (FT.)
L - DISTANCE FROM BEGINNING OF SUPERELEVATION TRANSITION TO ANY POINT (FT.)
d - WIDTH OF PAVEMENT (FT.) OR WIDTH OF SUBGRADE (FT.)
C - NORMAL CROWN (FT.)

GENERAL NOTES

1. ON PAVEMENT WITH TWO-WAY TRAFFIC, THE SUPERELEVATION SHALL BE REVOLVED ON THE INSIDE PAVEMENT EDGE UNLESS OTHERWISE NOTED ON THE PLANS
2. SUPERELEVATION VALUES SHOWN ON THE CROSS SECTIONS ARE VALUES (+) OR (-) TO BE ADDED TO OR SUBTRACTED FROM THE POINT OF CONTROL.
3. LENGTHS FOR L MAY BE ROUNDED IN MULTIPLES OF 25 FT. OR 50 FT. TO PERMIT SIMPLER CALCULATIONS.
4. PAVEMENTS WIDER THAN 2 LANES SHALL HAVE ADDITIONAL TRANSITION LENGTHS AS FOLLOWS:

3 LANE UNDIVIDED - - - - - +20%
4 LANE UNDIVIDED - - - - - +50%
5 LANE UNDIVIDED - - - - - +80%
6 LANE UNDIVIDED - - - - - +100%

NOTE: MAINTAIN NORMAL CROWN ON INSIDE UNTIL SUPERELEVATION EXCEEDS 2C.

RATE OF SUPERELEVATION SHALL BE COMPUTED ON STRAIGHT LINE METHOD USING APPLICABLE Ls.

SUPERELEVATION FORMULA = $\frac{Lde}{Ls}$

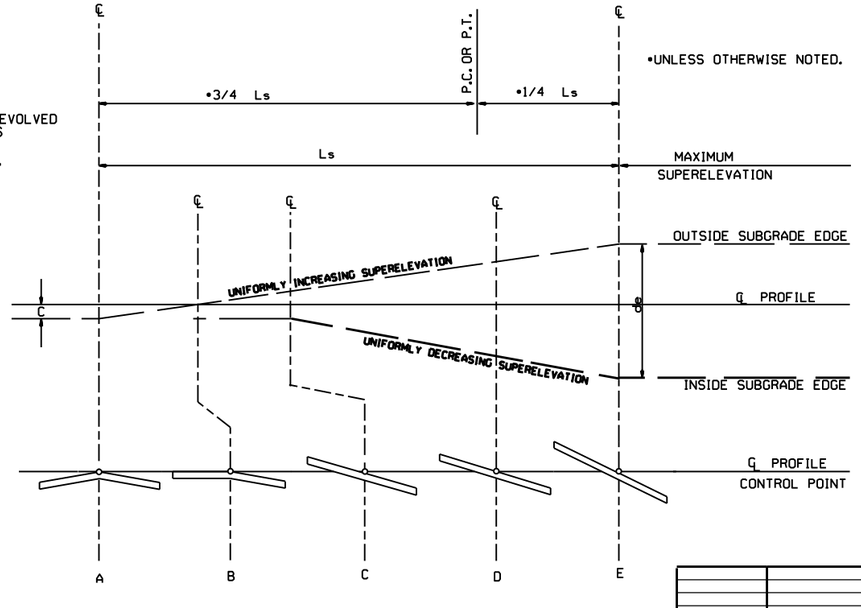

STANDARD METHOD WHEN SUPERELEVATION REVOLVES AROUND CENTER LINE

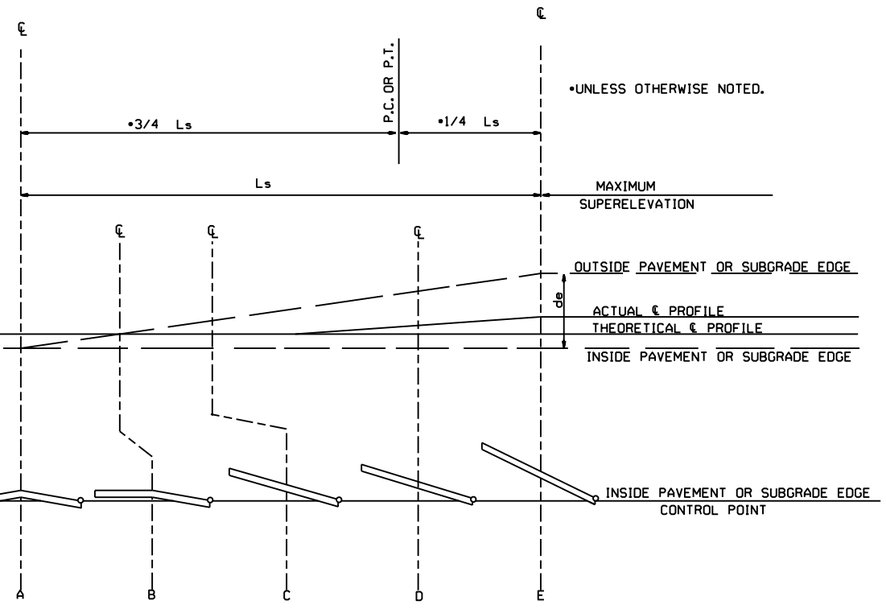

STANDARD METHOD WHEN SUPERELEVATION REVOLVES AROUND INNER SUBGRADE POINT OR INNER PAVEMENT EDGE

NOTE: MAINTAIN NORMAL CROWN ON INSIDE UNTIL SUPERELEVATION EXCEEDS 2C.

DATE	REVISION	DATE FILLMED
11-07-19	REVISED SUPERELEVATION TABLE	
10-18-96	ADDED FORMULA	
01-09-87	ISSUED	534-1-9-87

ARKANSAS STATE HIGHWAY COMMISSION

TABLES AND METHOD OF SUPERELEVATION FOR TWO-WAY TRAFFIC

STANDARD DRAWING SE-2

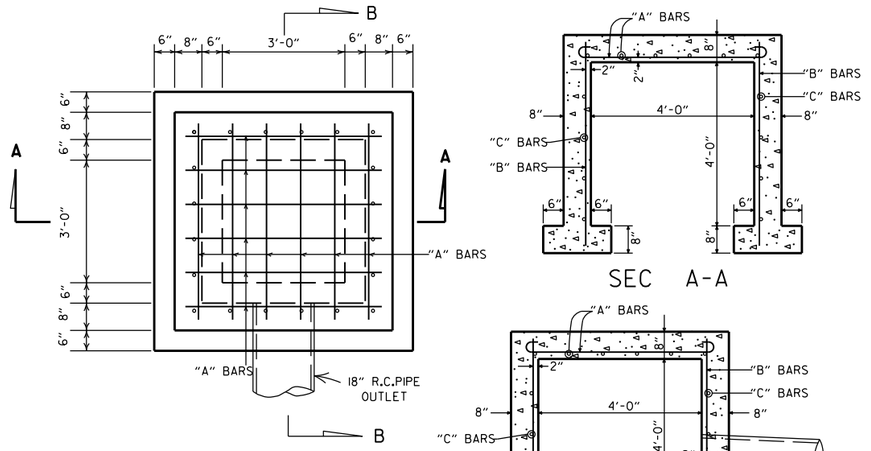

SEC A-A

SEC B-B

NOTE: MAX FILL HEIGHT ABOVE TOP OF BOX = 13'-0".

STEEL SCHEDULE

BARS	NUMBER	LENGTH	SPACING
"A"	12	6'-0"	10"
"B"	20	5'-0"	10 ½"
"C"	16	5'-0"	12"

ALL STEEL TO BE #4 BARS

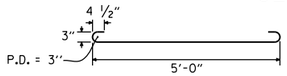

"A" BARS

QUANTITIES

CONCRETE 3.31 CU. YDS.
REINFORCING STEEL 168 LB.

GENERAL NOTE:

THE PAY ITEMS FOR REINFORCED CONCRETE SPRING BOXES SHALL BE FOR THE QUANTITIES OF CONCRETE OF THE CLASS SPECIFIED, REINFORCING STEEL, EXCAVATION FOR STRUCTURES AND 18" R.C. PIPE CULVERT.

REINFORCED CONCRETE SPRING BOX

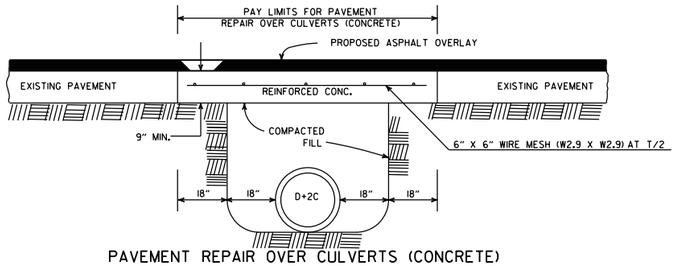

PAVEMENT REPAIR OVER CULVERTS (CONCRETE)

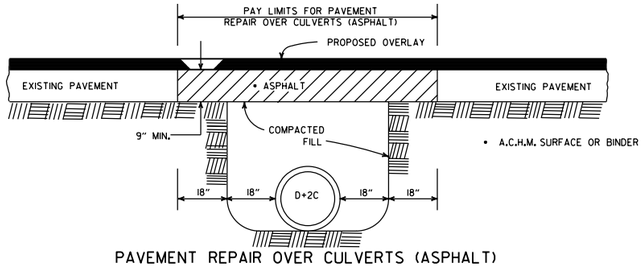

PAVEMENT REPAIR OVER CULVERTS (ASPHALT)

DETAIL SHOWING REPAIR OF EXISTING PAVEMENT AT CULVERT INSTALLATIONS

• A 2" MIN. HIGH CURB IS REQUIRED WHEN CONCRETE WALK IS ADJACENT TO THE HAND RAILING. PAYMENT FOR CURB SHALL BE CONSIDERED INCLUDED IN THE PRICE BID FOR CONCRETE WALKS.

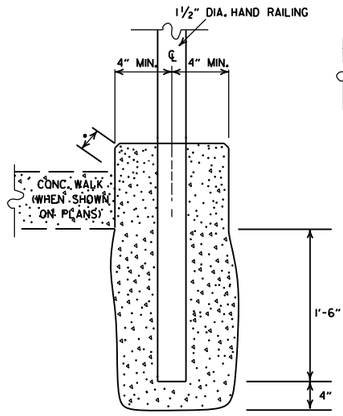

DETAIL OF HAND RAILING SET IN CONCRETE

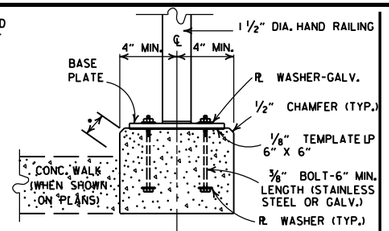

POST CONNECTION TO WALL

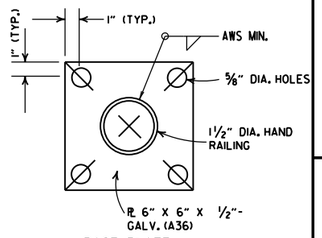

BASE PLATE

POST CONNECTION DETAILS

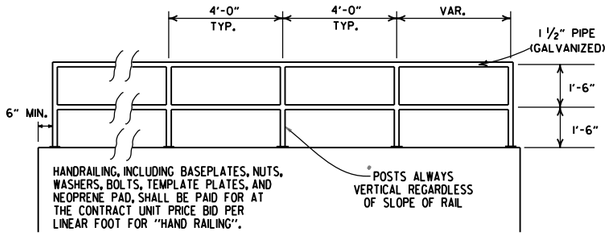

HAND RAILING SHALL CONFORM TO SECTION 633.

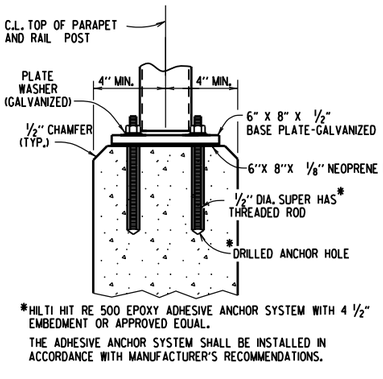

*HILTI HIT RE 500 EPOXY ADHESIVE ANCHOR SYSTEM WITH 4 ½" EMBEDMENT OR APPROVED EQUAL.

THE ADHESIVE ANCHOR SYSTEM SHALL BE INSTALLED IN ACCORDANCE WITH MANUFACTURER'S RECOMMENDATIONS.

POST CONNECTION TO WALL

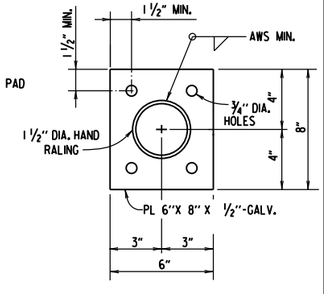

BASE PLATE

DETAILS OF ALTERNATE POST ANCHOR SYSTEM (EPOXY ADHESIVE ANCHORS)

HAND RAILING DETAILS

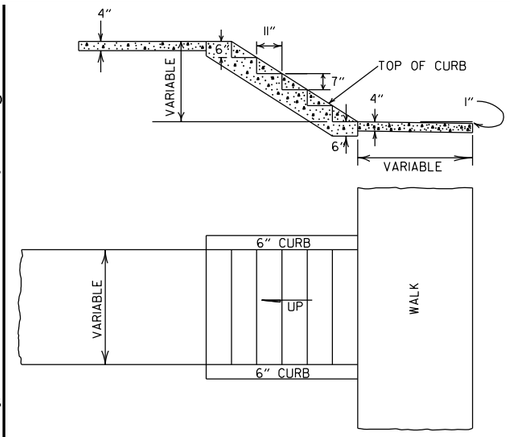

GENERAL NOTES

1. RISE AND TREAD DIMENSIONS OF STEPS MAY BE VARIED AS DIRECTED BY THE ENGINEER, HOWEVER, TREAD WIDTHS SHALL BE 11" MIN. ALL STEPS IN A FLIGHT SHALL HAVE CONSISTENT TREAD & RISER DIMENSIONS.
2. 1" TRANSVERSE EXPANSION JOINTS SHALL BE PLACED IN CONCRETE WALKS AT 45' INTERVALS.

DETAILS OF CONCRETE STEPS & WALKS

DATE	REVISION	DATE FILMED
10-25-18	REVISED DETAIL SHOWING REPAIR OF EXISTING PAVEMENT AT CULVERT INSTALLATIONS	
9-12-13	REVISED REINFORCED CONCRETE SPRING BOX	
7-26-12	REMOVED RETAINING WALL DETAILS & REVISED HAND RAILING DETAILS	
4-17-08	REV. JOINT & FOOTING STEP DETAILS	
11-29-07	REVISED RETAINING WALL DRAINAGE	
5-25-06	REVISED PVMT REPAIR OVER CULVERTS (CONC); REVISED REINFORCED CONC SPRING BOX	
10-9-03	REVISED PIPE RAILING DETAILS TO HAND RAILING DETAILS	
4-10-03	REVISED RETAINING WALL DRAWING	
8-22-02	ADDED HAND RAILING DETAIL	
11-16-01	REVISED PVMT REPAIR OVER CULVERTS (CONC); CORRECTED SPELLING IN GENERAL NOTES	
11-18-98	ADDED GENERAL NOTES TO CONCRETE STEPS & WALKS	
7-02-98	ENLARGED PIPE	
4-03-97	ADDED NOTE TO STEEL BAR SCHED.	
10-18-96	CORRECTED SPELLING	
4-26-94	ADD WEEP HOLE;REV. JOINT SPACING IN RET. WALL	
6-2-94	CHANGED CONST. TO CONTRACTION JOINT	
10-1-92	CHANGED MESH FABRIC TO WIRE MESH	10-1-92
8-15-91	DELETED HDWL MODIFICATION DETAIL	8-15-91
11-8-90	DELETED COLD MIX FROM CULV'T. REPAIR	11-8-90
11-30-89	REV. RETAINING WALL STEEL SCHEDULE	11-30-89
11-17-88	V. BARS BEHIND ARROW	665-11-17-88
7-15-88	REV. PAVEMENT REPAIR ADDED HDWL. MODS, DEL. PIPE UNDERDRAINS	649-7-15-88
11-1-84	REV. TRENCH FOR PIPE UNDERDRAIN	510-11-1-84
1-4-83	ELIMINATED CONC. CLASS & ADDED CHAMFER NOTE	682-1-4-83
3-2-81	SPELLING OF "UNDERDRAIN"	721-3-2-81
4-20-79	REV. UNDERDRAIN DET& PAVEMENT REPAIR	674-4-20-79
2-2-76	12"MIN. GRAN. MAT'L. OVER PIPE	919-2-2-76
4-10-75	REM. SPECS. FOR GRAN. MAT'L.	568-4-10-75-853
5-22-74	GRANULAR MAT'L. TO BE SB-3	567-5-22-74-740
10-2-72	REVISED AND REDRAWN	564-10-16-72

ARKANSAS STATE HIGHWAY COMMISSION

DETAILS OF SPECIAL ITEMS

STANDARD DRAWING SI - 1

R1-1



STANDARD 30"X30"
EXPRESSWAY 36"X36"
SPECIAL 48"X48"

R1-2

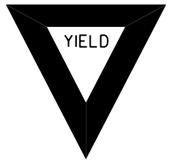

STD. 36"X36"X36"
EXPWY. 48"X48"X48"
FWY. 60"X60"X60"

R2-1



STD. 24"X30"
EXPWY. 36"X48"
FWY. 48"X60"

W3-5



STD. 36"X36"
EXPWY. 48"X48"
FWY. 48"X48"

W3-5a



STD. 36"X36"
EXPWY. 48"X48"
FWY. 48"X48"

R4-1



STD. 24"X30"
EXPWY. 36"X48"
FWY. 48"X60"

R4-2



STD. 24"X30"
EXPWY. 36"X48"
FWY. 48"X60"

R5-1



STD. 30"X30"
EXPWY. 36"X36"
SPECIAL 48"X48"

R11-2



48"X30"

R11-3A

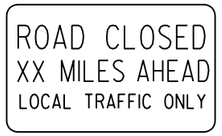

60"X30"

R11-4



60"X30"

W21-5a



STD. 36"X36"
FWY. 48"X48"

W1-1



STD. 36"X36"
FWY. 48"X48"

W1-2



STD. 36"X36"
FWY. 48"X48"

W1-3



STD. 48"X48"

W1-4



STD. 48"X48"

W1-6



STD. 48"X24"
SPECIAL 60"X30"

W1-8

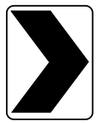

STD. 18"X24"
SPECIAL 24"X30"
EXPWY. 30"X36"
FWY. 36"X48"

W3-1



STD. 36"X36"
SPECIAL 48"X48"

W3-2



STD. 36"X36"
SPECIAL 48"X48"

W4-2

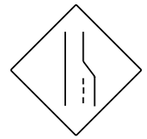

STD. 36"X36"
FWY. 48"X48"

W5-1



STD. 36"X36"
SPECIAL 48"X48"

W6-3



EXPWY. 36"X36"
SPECIAL 48"X48"

W8-7



EXPWY. 36"X36"
FWY. 48"X48"

W9-2



STD. 36"X36"
FWY. 48"X48"

W13-1



STD. 24"X24"

W20-1



STD. 48"X48"

W20-2



STD. 48"X48"

W20-3



STD. 48"X48"

W20-4



STD. 48"X48"

W20-5



STD. 48"X48"

W20-7a



STD. 36"X36"
FWY. 48"X48"

W21-2



STD. 30"X30"
SPECIAL 36"X36"

W21-5



STD. 30"X30"
SPECIAL 36"X36"

W24-1



STD. 36"X36"

W1-4b



STD. 48"X48"

R56-1



STD. 18"X18"

W8-11



STD. 36"X36"
FWY. 48"X48"

W8-9



STD. 36"X36"
FWY. 48"X48"

G20-1



60"X24"

G20-2

48"X24"

OM-3L OM-3R

12"X36"

M4-9

STD. 30"X24"
SPECIAL 48"X36"
SPECIAL 60"X48"

M4-10

48"X18"

R55-1

36"X60"

• USE 6" C LETTERS
•• USE 4" D LETTERS

ADVANCE DISTANCES
(XXXX)

500 FT	½ MILE
1000 FT	¾ MILE
1500 FT	1 MILE AHEAD

GENERAL NOTES:

1. ALL TRAFFIC CONTROL DEVICES USED ON ROAD CONSTRUCTION SHALL CONFORM TO THE MANUAL ON UNIFORM TRAFFIC CONTROL DEVICES, LATEST EDITION, AND TO THE STANDARD HIGHWAY SIGNS, LATEST EDITION, OR AS APPROVED BY THE FEDERAL HIGHWAY ADMINISTRATION.
2. TRAFFIC CONTROL DEVICES SHALL BE SET UP JUST BEFORE THE START OF CONSTRUCTION OPERATIONS AND SHALL BE PROPERLY MAINTAINED DURING THE TIME SUCH CONDITIONS EXIST. THEY SHALL REMAIN IN PLACE ONLY AS LONG AS NEEDED AND REMOVED THEREAFTER.
3. EXISTING SIGNS AND CONSTRUCTION SIGNS SHALL BE KEPT IN PROPER POSITION, AND BE CLEAN AND LEGIBLE AT ALL TIMES. SIGNS THAT DO NOT APPLY TO EXISTING CONDITIONS SHALL BE REMOVED. SIGNS THAT ARE DAMAGED, DEFACED, OR THAT ACCUMULATE DIRT DURING CONSTRUCTION SHALL BE CLEANED, REPAIRED, OR REPLACED.
- 4. SIGNS ARE USUALLY MOUNTED ON A SINGLE POST, ALTHOUGH THOSE WIDER THAN 36" OR LARGER THAN 10 SQ. FT. SHALL BE MOUNTED ON TWO POSTS OR ABOVE A TYPE III BARRICADE.
- 5. SIGN POSTS DIRECT BURIED IN SOIL SHALL BE 2 LB. MINIMUM CHANNEL POST OR 4"x4" WOOD POSTS. CHANNEL POSTS SHALL BE PAINTED GREEN. WOOD POSTS SHALL BE PAINTED WHITE. ALL POSTS SHALL BE NEATLY CONSTRUCTED, AND SHALL BE REPLUMBED, CLEANED, OR REPAIRED AS NEEDED FOR THE DURATION OF THE JOB. THERE SHALL NOT BE MORE THAN 2 POSTS IN A 7' PATH FOR WOOD OR CHANNEL POSTS. ANY CHANNEL POST SPLICE SHALL BE IN ACCORDANCE WITH STANDARD DRAWING TC-3.
6. POST MOUNTED SIGNS IN RURAL AREAS SHALL BE CONSTRUCTED WITH THE NEAR EDGE OF THE SIGN FROM 6 TO 12 FEET FROM THE PAVEMENT EDGE. SIGNS IN URBAN AREAS AND BARRICADE MOUNTED SIGNS SHALL BE MOUNTED A MINIMUM OF 2 FEET FROM THE PAVEMENT EDGE.
7. ALL POST AND BARRICADE MOUNTED SIGNS MOUNTED IN URBAN AREAS SHALL BE MOUNTED A MINIMUM DISTANCE OF 7' FROM THE BOTTOM OF THE SIGN TO THE ROADWAY SURFACE. ALL POST AND BARRICADE MOUNTED SIGNS MOUNTED IN RURAL AREAS SHALL BE MOUNTED A MINIMUM DISTANCE OF 7' FROM THE BOTTOM OF THE SIGN TO THE ROADWAY SURFACE, EXCEPT A MINIMUM OF 6' SHALL BE USED WHEN MOUNTING AN ADVISORY SIGN BELOW A WARNING SIGN. TEMPORARY SIGNS MAY BE MOUNTED ON PORTABLE SUPPORTS FOR INTERMEDIATE TERM STATIONARY WORK CONDITIONS. THE SIGNS MINIMUM MOUNTING HEIGHT SHALL BE 5'. RETROREFLECTIVE DEVICES SHALL BE USED. TEMPORARY SIGNS MAY BE MOUNTED ON PORTABLE SUPPORTS FOR SHORT-TERM, SHORT DURATION, AND MOBILE CONDITIONS. THEY SHALL BE NO LESS THAN ONE (1) FOOT ABOVE THE TRAVELED WAY. LONG-TERM STATIONARY SIGNS SHALL BE DIRECT BURIED IN SOIL, UNLESS CONDITIONS NECESSITATE THE USE OF PORTABLE SIGNS, OR AS APPROVED BY THE ENGINEER. CONCRETE PADS, CONCRETE OR ROCK BALLAST, OR OTHER SOLID MATERIALS SHALL NOT BE UTILIZED WITH PORTABLE SIGN SUPPORTS.
8. FLAGGERS SHALL USE REFLECTORIZED STOP-SLOW PADDLES. FLAGS MAY BE USED ONLY FOR EMERGENCY SITUATIONS.
9. MOST OF THE SIGNS SHOWN ARE ORIENTED TO THE RIGHT. HOWEVER, THIS DOES NOT PRECLUDE THE USE OF MIRROR IMAGES OF THESE SIGNS WHERE THE REVERSE ORIENTATION MIGHT BETTER CONVEY TO MOTORISTS THE PROPER DIRECTION OF MOVEMENT.
10. R55-1 SIGNS SHALL BE PLACED AT LEAST 1500' BUT NOT MORE THAN 1 MILE IN ADVANCE OF THE WORK ZONE. IF A SPEED LIMIT REDUCTION IS IN EFFECT, THE SIGN SHALL BE PLACED A MINIMUM OF 500' IN ADVANCE OF THE "REDUCED SPEED AHEAD" SIGN.

- NOTE: SUPPORTS FOR SIGNS, BARRICADES, AND VERTICAL PANELS THAT ARE DIFFERENT FROM THE REQUIREMENTS SHOWN IN NOTES 4 & 5, BUT MEET THE REQUIREMENTS OF MANUAL FOR ASSESSING SAFETY HARDWARE (MASH), WILL BE ACCEPTED. COMPLIANCE WITH THE REQUIREMENTS OF MANUAL FOR ASSESSING SAFETY HARDWARE (MASH) IS REQUIRED FOR ALL PROJECTS.

DATE	REVISION	FILMED
11-07-19	REVISED FOR MASH	
4-13-17	DELETED RSP-1 & ADDED W21-5a	
9-2-15	REVISED REDUCED SPEED LIMIT AHEAD SIGNS REVISED ROAD WORK NEXT XX MILES	
12-15-11	REVISED W24-1	
11-17-10	DELETED W8-9a & ADDED W8-9	
10-15-09	ADDED REFERENCE TO MASH & ADDED SIGN W24-1	
4-17-08	REVISED SIGN DESIGNATIONS	
11-18-04	REVISED NOTES	
10-9-03	REVISED NOTE 1	
11-16-01	REVISED NOTE 7	
9-28-00	REVISED NOTE	
11-18-98	ADDED NOTE	
6-26-97	REVISED NOTE 5	
4-03-97	REVISED NOTE 5	
10-18-96	ADDED CONTROLLED ACCESS HWY. SIGN & TO NOTE 7	
10-12-95	ADDED R55-1	
6-8-95	REVISED TO CORRECT SIGN ILLUSTRATIONS	6-8-95
2-2-95	REVISED PER PART VI, MUTCD SEPT. 3, 1993	
8-15-91	DRAWN AND PLACED IN USE	

ARKANSAS STATE HIGHWAY COMMISSION

STANDARD TRAFFIC CONTROLS FOR HIGHWAY CONSTRUCTION

STANDARD DRAWING TC-1

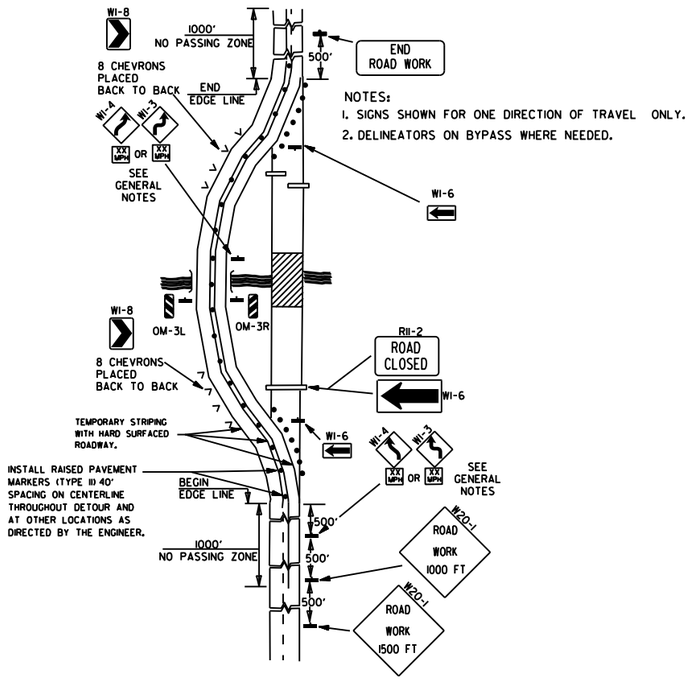

NOTES:
1. SIGNS SHOWN FOR ONE DIRECTION OF TRAVEL ONLY.
2. DELINEATORS ON BYPASS WHERE NEEDED.

(A) TYPICAL APPLICATION OF TRAFFIC CONTROL DEVICES ON A 2-LANE HIGHWAY WHERE THE ENTIRE ROADWAY IS CLOSED AND A BYPASS DETOUR IS PROVIDED.

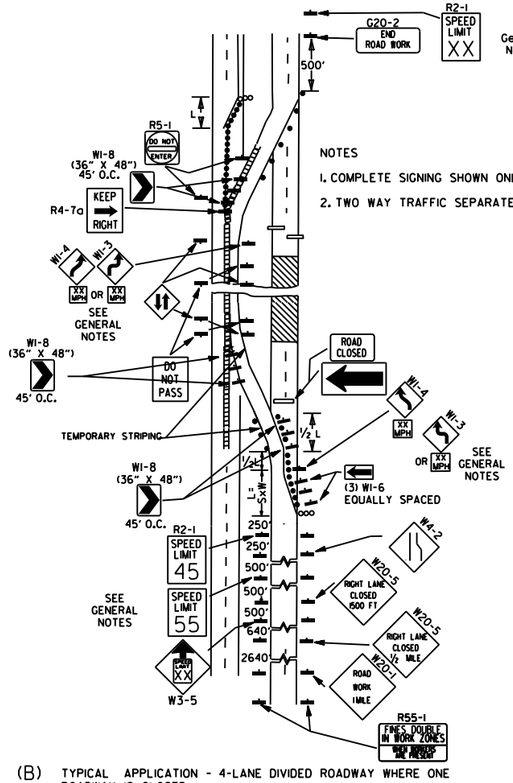

NOTES
1. COMPLETE SIGNING SHOWN ONLY IN CROSSOVER DIRECTION.
2. TWO WAY TRAFFIC SEPARATED WITH POSITIVE BARRIER.

(B) TYPICAL APPLICATION - 4-LANE DIVIDED ROADWAY WHERE ONE ROADWAY IS CLOSED.

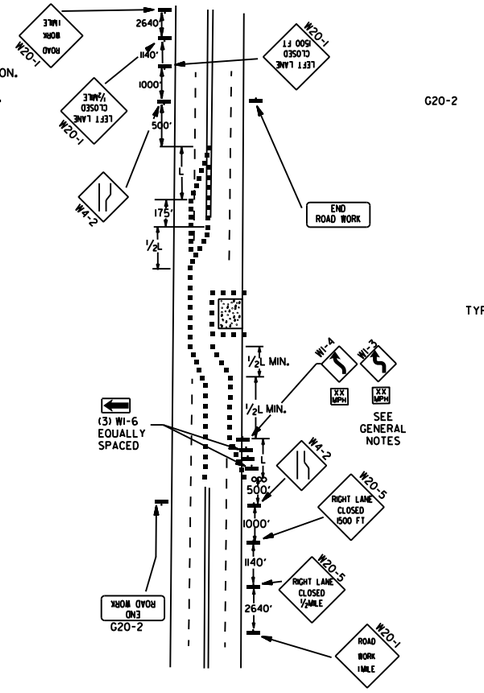

(C) TYPICAL APPLICATION - 4-LANE UNDIVIDED ROADWAY WHERE HALF OF THE ROADWAY IS CLOSED.

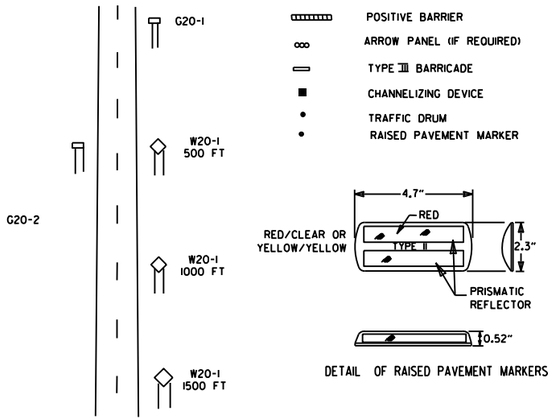

DETAIL OF RAISED PAVEMENT MARKERS

TYPICAL ADVANCE WARNING SIGN PLACEMENT

TAPER FORMULAE:

L=SXW FOR SPEEDS OF 45MPH OR MORE.

$L = \frac{WS^2}{60}$ FOR SPEEDS OF 40MPH OR LESS.

WHERE:

L= MINIMUM LENGTH OF TAPER.

S= NUMERICAL VALUE OF POSTED SPEED LIMIT PRIOR TO WORK OR 85TH PERCENTILE SPEED.

W= WIDTH OF OFFSET.

GENERAL NOTES:

1. THE MAINTENANCE DIVISION SHALL CONDUCT A BALL BANK STUDY TO DETERMINE THE ADVISORY SPEED LIMIT PRIOR TO OPENING TO TRAFFIC. THE ADVISORY SPEED WILL BE POSTED ON WI-3 OR WI-4 CURVE WARNING SIGNS. USE WI-4 WHEN SPEED IS GREATER THAN 30MPH AND WI-3 WHEN 30MPH OR LESS
2. WHEN THE EXISTING SPEED LIMIT IS 55MPH AND THE PLANS REQUIRE A SPEED LIMIT OF 45MPH, THE R2-1(55) SHALL BE OMITTED AND THE W3-5 SHALL BE INSTALLED AT THAT LOCATION. ADDITIONAL R2-145MPH SPEED LIMIT SIGNS SHALL BE INSTALLED AT A MAXIMUM OF 1MILE INTERVALS. AT THE END OF THE WORK AREA A R2-1(XX) SHALL BE INSTALLED TO MATCH ORIGINAL SPEED LIMIT.
3. WHEN THE EXISTING SPEED LIMIT IS 65MPH AND THE PLANS REQUIRE A SPEED LIMIT OF 55MPH, THE R2-1(45) SHALL BE OMITTED. ADDITIONAL R2-155MPH SPEED LIMIT SIGNS SHALL BE INSTALLED AT A MAXIMUM OF 1MILE INTERVALS. AT THE END OF THE WORK AREA A R2-1(XX) SHALL BE INSTALLED TO MATCH ORIGINAL SPEED LIMIT.
4. THE MAXIMUM SPACING BETWEEN CHANNELIZING DEVICES IN A TAPER SHOULD BE APPROXIMATELY EQUAL IN FEET TO THE SPEED LIMIT. BEYOND THE TAPER, MAXIMUM SPACING SHALL BE TWO TIMES THE SPEED LIMIT, OR AS DIRECTED BY THE ENGINEER.
5. WARNING LIGHTS AND/OR FLAGS MAY BE MOUNTED TO SIGNS OR CHANNELIZING DEVICES AT NIGHT AS NEEDED.
6. PAVEMENT MARKINGS NO LONGER APPLICABLE WHICH MIGHT CREATE CONFUSION IN THE MINDS OF VEHICLE OPERATORS SHALL BE REMOVED OR OBLITERATED AS SOON AS PRACTICABLE.
7. TRAILER MOUNTED DEVICES SUCH AS ARROW PANELS AND PORTABLE CHANGEABLE MESSAGE SIGNS SHALL BE DELINEATED BY AFFIXING CONSPICUITY MATERIAL IN A CONTINUOUS LINE ON THE FACE OF THE TRAILER. WHEN PLACED ON OR ADJACENT TO THE SHOULDER AND NOT BEHIND A POSITIVE BARRIER, THESE DEVICES SHALL BE DELINEATED BY PLACING FIVE (5) TRAFFIC DRUMS, EQUALLY SPACED ALONG THE TRAFFIC SIDE OF THE DEVICE. PAYMENT FOR TRAFFIC DRUMS SHALL BE CONSIDERED INCLUDED IN THE PRICE BID FOR VARIOUS TRAILER MOUNTED DEVICES.
8. DIMENSIONS SHOWN FOR RAISED PAVEMENT MARKERS ARE TYPICAL. THE CONTRACTOR MAY SUBSTITUTE SIMILAR MARKERS WITH THE APPROVAL OF THE ENGINEER. REQUESTING APPROVAL FOR SIMILAR MARKERS MAY BE MADE BY REFERRING TO THE ARDOT QUALIFIED PRODUCTS LIST.
9. ALL TRAILER MOUNTED DEVICES SUCH AS ARROW PANELS AND PORTABLE CHANGEABLE MESSAGE SIGNS SHALL MEET THE REQUIREMENTS OF THE MANUAL FOR ASSESSING SAFETY HARDWARE (MASH).

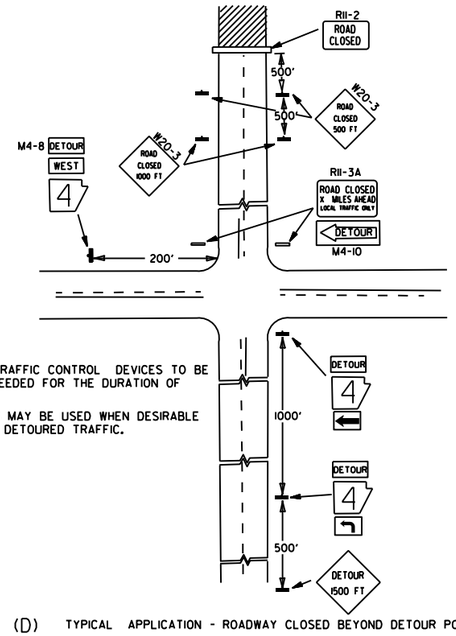

NOTES:
1. REGULATORY TRAFFIC CONTROL DEVICES TO BE MODIFIED AS NEEDED FOR THE DURATION OF THE DETOUR.
2. STREET NAMES MAY BE USED WHEN DESIRABLE FOR DIRECTING DETOURED TRAFFIC.

(D) TYPICAL APPLICATION - ROADWAY CLOSED BEYOND DETOUR POINT.

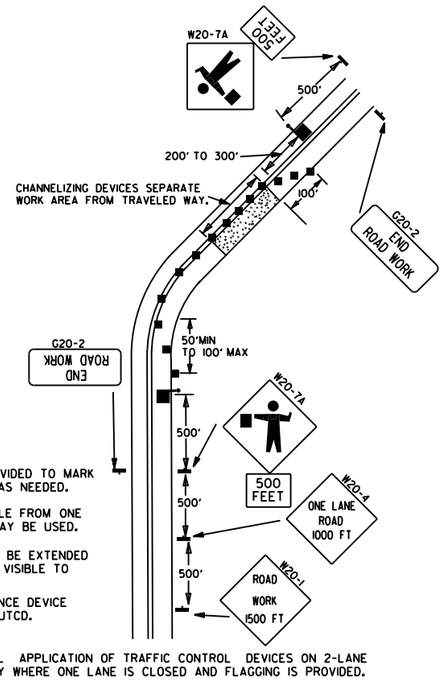

NOTES:
1. FLOOD LIGHTS SHOULD BE PROVIDED TO MARK FLAGGER STATIONS AT NIGHT AS NEEDED.
2. IF ENTIRE WORK AREA IS VISIBLE FROM ONE STATION, A SINGLE FLAGGER MAY BE USED.
3. CHANNELIZING DEVICES ARE TO BE EXTENDED TO A POINT WHERE THEY ARE VISIBLE TO APPROACHING TRAFFIC.
4. AUTOMATED FLAGGER ASSISTANCE DEVICE (AFAD) OPTIONAL. REFER TO MUTCD.

(E) TYPICAL APPLICATION OF TRAFFIC CONTROL DEVICES ON 2-LANE HIGHWAY WHERE ONE LANE IS CLOSED AND FLAGGING IS PROVIDED.

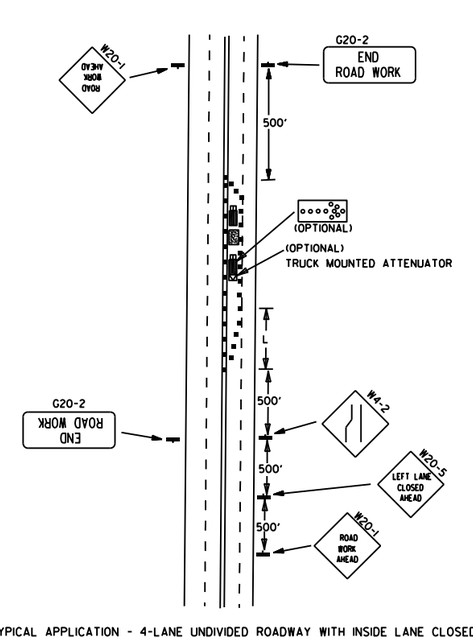

(F) TYPICAL APPLICATION - 4-LANE UNDIVIDED ROADWAY WITH INSIDE LANE CLOSED.

DATE	REVISION	FILMED
05-20-21	REVISED NOTE 7	
11-07-19	REVISED NOTE 1, ADDED NOTE 9	
9-2-15	REVISED NOTE 2, ADDED NOTE 8, REVISED DRAWING (A) & REPLACED R2-5A WITH W3-5	
9-12-13	REVISED DETAIL OF RAISED PAVEMENT MARKERS	
3-11-10	ADDED (AFAD)	
11-20-08	REVISED SIGN DESIGNATIONS	
11-18-04	ADDED GENERAL NOTE	
10-18-96	ADDED R55-1	
4-26-96	CORRECTED (a) BEHIND G20-2	
6-8-95	CORRECTED SIGN IDENT. ON W1-4A	6-8-95
2-2-95	REVISED PER PART VI, MUTCD, SEPT. 3, 1993	
8-15-91	DRAWN AND PLACED IN USE	

ARKANSAS STATE HIGHWAY COMMISSION

STANDARD TRAFFIC CONTROLS FOR HIGHWAY CONSTRUCTION

STANDARD DRAWING TC-2

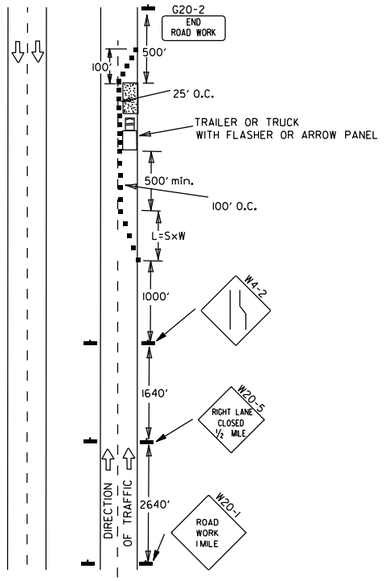

(A) TYPICAL APPLICATION - DAYTIME MAINTENANCE OPERATIONS OF SHORT DURATION ON A 4-LANE DIVIDED ROADWAY WHERE HALF OF THE ROADWAY IS CLOSED.

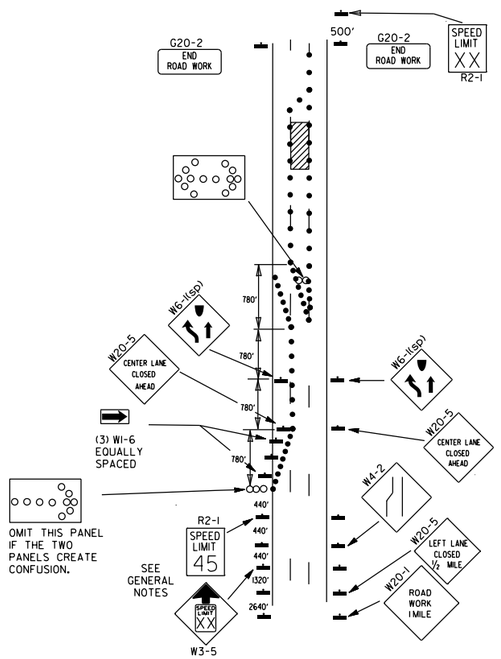

(B) TYPICAL APPLICATION - 3-LANE ONEWAY ROADWAY WHERE CENTER LANE IS CLOSED.

KEY:

ARROW PANEL (IF REQUIRED)

■ CHANNELIZING DEVICE

● TRAFFIC DRUM

GENERAL NOTES:

1. A SPEED LIMIT REDUCTION MAY BE IMPLEMENTED ONLY WHEN DESIGNATED IN THE PLAN OR WHEN RECOMMENDED BY THE ROADWAY DESIGN DIVISION.
2. WHEN THE EXISTING SPEED LIMIT IS 55MPH AND THE PLANS REQUIRE A SPEED LIMIT OF 45MPH, THE R2-1(55) SHALL BE OMITTED AND THE W3-5 SHALL BE INSTALLED AT THAT LOCATION. ADDITIONAL R2-1 45MPH SPEED LIMIT SIGNS SHALL BE INSTALLED AT A MAXIMUM OF 1MILE INTERVALS. AT THE END OF THE WORK AREA A R2-1(XX) SHALL BE INSTALLED TO MATCH ORIGINAL SPEED LIMIT.
3. WHEN THE EXISTING SPEED LIMIT IS 65MPH AND THE PLANS REQUIRE A SPEED LIMIT OF 55MPH, THE R2-1(45) SHALL BE OMITTED. ADDITIONAL R2-1 55MPH SPEED LIMIT SIGNS SHALL BE INSTALLED AT A MAXIMUM OF 1MILE INTERVALS, AT THE END OF THE WORK AREA A R2-1(XX) SHALL BE INSTALLED TO MATCH ORIGINAL SPEED LIMIT.
4. THE MAXIMUM SPACING BETWEEN CHANNELIZING DEVICES IN A TAPER SHOULD BE APPROXIMATELY EQUAL IN FEET TO THE SPEED LIMIT. BEYOND THE TAPER, MAXIMUM SPACING SHALL BE TWO TIMES THE SPEED LIMIT OR AS DIRECTED BY THE ENGINEER.
5. WARNING LIGHTS AND/OR FLAGS MAY BE MOUNTED TO SIGNS OR CHANNELIZING DEVICES AT NIGHT AS NEEDED.
6. PAVEMENT MARKINGS NO LONGER APPLICABLE WHICH MIGHT CREATE CONFUSION IN THE MINDS OF VEHICLE OPERATORS SHALL BE REMOVED OR OBLITERATED AS SOON AS PRACTICABLE.
7. THE G20-1 SIGN WILL BE REQUIRED ON JOBS OF OVER TWO MILES IN LENGTH. WHEN THE LANE CLOSURE IS NOT AT THE BEGINNING OF THE PROJECT, THE G20-1 SIGN SHALL BE ERECTED 125' IN ADVANCE OF THE JOB LIMIT. ADDITIONAL W20-1 (1 MILE) SIGNS ARE NOT REQUIRED IN ADVANCE OF LANE CLOSURES THAT BEGIN INSIDE THE PROJECT LIMITS.
8. FLAGGERS SHALL USE STOP/SLOW PADDLES FOR CONTROLLING TRAFFIC THROUGH WORK ZONES. FLAGS MAY BE USED ONLY FOR EMERGENCY SITUATIONS.
9. ALL PLASTIC DRUMS AND CONES SHALL MEET THE REQUIREMENTS OF MANUAL FOR ASSESSING SAFETY HARDWARE (MASH).
10. TRAILER MOUNTED DEVICES SUCH AS ARROW PANELS AND PORTABLE CHANGEABLE MESSAGE SIGNS SHALL BE DELINEATED BY AFFIXING CONSPICUITY MATERIAL IN A CONTINUOUS LINE ON THE FACE OF THE TRAILER. WHEN PLACED ON OR ADJACENT TO THE SHOULDER AND NOT BEHIND A POSITIVE BARRIER, THESE DEVICES SHALL BE DELINEATED BY PLACING FIVE (5) TRAFFIC DRUMS, EQUALLY SPACED ALONG THE TRAFFIC SIDE OF THE DEVICE. PAYMENT FOR TRAFFIC DRUMS SHALL BE CONSIDERED INCLUDED IN THE PRICE BID FOR VARIOUS TRAILER MOUNTED DEVICES.
11. ALL TRAILER MOUNTED DEVICES SUCH AS ARROW PANELS AND PORTABLE CHANGEABLE MESSAGE SIGNS SHALL MEET THE REQUIREMENTS OF THE MANUAL FOR ASSESSING SAFETY HARDWARE (MASH).

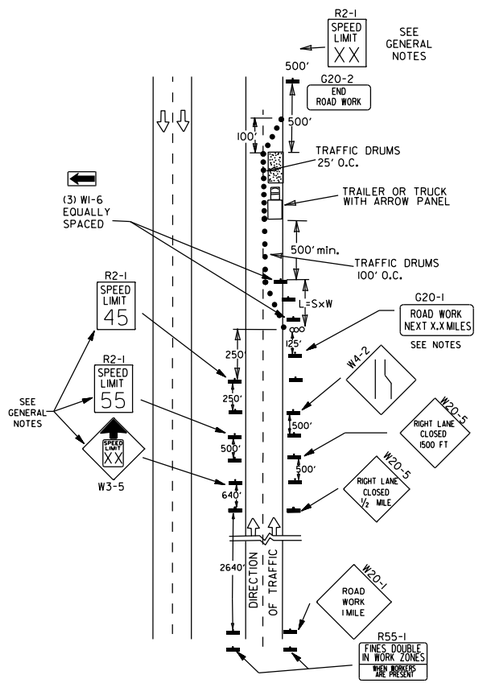

(C) TYPICAL APPLICATION - CONSTRUCTION OPERATIONS OF INTERMEDIATE TO LONG TERM DURATION ON A 4-LANE DIVIDED ROADWAY WHERE HALF OF THE ROADWAY IS CLOSED.

CHANNELIZING DEVICES

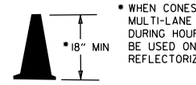

* WHEN CONES ARE USED ON FREEWAYS AND MULTI-LANE HIGHWAYS, THEY SHALL BE 28" MIN. DURING HOURS OF DARKNESS, 28" CONES SHALL BE USED ON ALL ROADWAYS, AND SHALL BE REFLECTORIZED IN ACCORDANCE WITH THE M.U.T.C.D.

CONES

PLASTIC DRUM

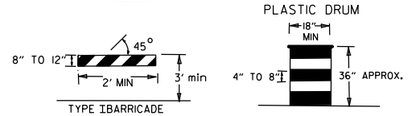

NOTE:
FOR ALL ROAD CLOSURES, THE TYPE III BARRICADES SHALL BE OF SUFFICIENT LENGTH TO EXTEND ACROSS ENTIRE ROADWAY.

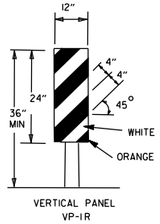

VERTICAL PANEL PLACEMENT

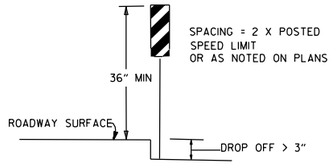

FLAG

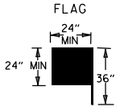

FLAG SHALL BE OF GOOD GRADE RED MATERIAL

TRAFFIC CONTROL DEVICES			
NON-INTERSTATE			
VERTICAL DIFFERENTIAL	LOCATION	TRAFFIC CONTROL	
		≤ 45 MPH	> 45 MPH
≤ 1"	CENTERLINE	W8-11	W8-11
> 1" ≤ 3"	CENTERLINE	W8-11 AND CENTERLINE LANE STRIPING	W8-11 AND CENTERLINE LANE STRIPING
> 3"	CENTERLINE	STANDARD LANE CLOSURE[6]	STANDARD LANE CLOSURE[6]
≤ 3"	EDGE OF TRAVELED LANE OR EDGE OF SHOULDER	W8-9 AND TRAFFIC DRUMS[1]	W8-9 AND TRAFFIC DRUMS[1]
> 3" ≤ 6"	EDGE OF TRAVELED LANE OR EDGE OF SHOULDER	W8-17, EDGE LINE STRIPING, AND TRAFFIC DRUMS[1]	W8-17, EDGE LINE STRIPING, AND TRAFFIC DRUMS[1]
> 6" ≤ 18"	EDGE OF TRAVELED LANE OR EDGE OF SHOULDER	W8-17, EDGE LINE STRIPING, AND TRAFFIC DRUMS[1]	W8-17, EDGE LINE STRIPING, AND TRAFFIC DRUMS[2]
> 18" ≤ 24"	EDGE OF TRAVELED LANE OR EDGE OF SHOULDER	W8-17, EDGE LINE STRIPING, AND TRAFFIC DRUMS[1]	A STABILIZED WEDGE, W8-17, EDGE LINE STRIPING AND TRAFFIC DRUMS[3]
> 24"	EDGE OF TRAVELED LANE OR EDGE OF SHOULDER	PRECAST CONCRETE BARRIER[4] & EDGE LINES	PRECAST CONCRETE BARRIER[4] & EDGE LINES

INTERSTATE		
VERTICAL DIFFERENTIAL	LOCATION	TRAFFIC CONTROL
≤ 3"	CENTERLINE	W8-11 AND LANE STRIPING
≤ 3"	EDGE OF TRAVELED LANE OR EDGE OF SHOULDER	W8-9, EDGE LINE STRIPING, AND TRAFFIC DRUMS[2]
> 3" ≤ 6"	EDGE OF TRAVELED LANE OR EDGE OF SHOULDER	W8-17, EDGE LINE STRIPING, AND TRAFFIC DRUMS[2]
> 6"	EDGE OF TRAVELED LANE OR EDGE OF SHOULDER	PRECAST CONCRETE BARRIER & EDGE LINES

INTERSTATE AND NON-INTERSTATE		
FORESLOPE	HEIGHT	TRAFFIC CONTROL
1:1	> 2 FT	PRECAST CONCRETE BARRIER
2:1	≤ 5 FT	TRAFFIC DRUMS
2:1	> 5 FT	PRECAST CONCRETE BARRIER
Flatter than 2:1	N/A	TRAFFIC DRUMS

GENERAL NOTES:

1. WHEN THE SHOULDER AREA IS USED AS PART OF THE TRAVELED LANE AND THERE IS INSUFFICIENT WIDTH TO PLACE TRAFFIC DRUMS ON THE REMAINING SHOULDER WIDTH, THEN VERTICAL PANELS SHALL BE USED.
2. WHEN THERE IS INSUFFICIENT WIDTH TO PLACE TRAFFIC DRUMS ON THE REMAINING SHOULDER WIDTH, A STABILIZED WEDGE SHALL BE USED.
3. PRECAST CONCRETE BARRIER WALL CAN BE USED IN LIEU OF A STABILIZED WEDGE, W8-17 SIGN, EDGE LINE STRIPING, AND TRAFFIC DRUMS, IF AND WHERE DIRECTED BY THE ENGINEER.
4. A STABILIZED WEDGE, W8-17 SIGN, EDGE LINE STRIPING, AND TRAFFIC DRUMS CAN BE USED IN LIEU OF PRECAST CONCRETE BARRIER WALL, IF AND WHERE DIRECTED BY THE ENGINEER.
5. W21-5, W21-5a, AND/OR W21-5b SIGNS SHALL BE USED WHERE THE ROADWAY IS UNOBSTRUCTED IF AND WHERE DIRECTED BY THE ENGINEER.
6. TIME LIMITATIONS MUST CONFORM TO SECTION 603 OF THE STANDARD SPECIFICATIONS FOR HIGHWAY CONSTRUCTION (CURRENT EDITION).

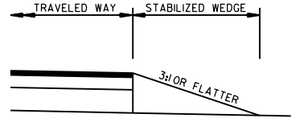

STABILIZED WEDGE

NOTE:
MATERIALS FOR THE STABILIZED WEDGE SHALL MEET THE REQUIREMENTS PROVIDED IN SECTION 603.02 OF THE STANDARD SPECIFICATIONS.

STOP SLOW PADDLE

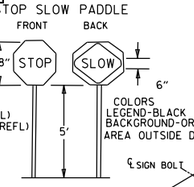

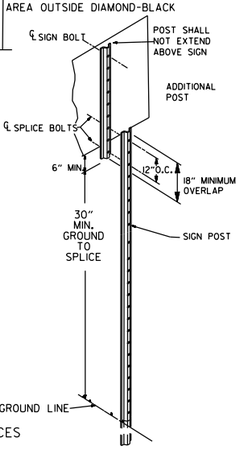

NOTES: USE SPLICES ONLY WHEN NECESSARY FOR INSTALLATION. TYPICAL INSTALLATION SHOULD HAVE NO SPLICES (SEE STD. DRAWING NO. SHS-21)

NORMAL INSTALLATIONS WILL REQUIRE 1/4" DIA. BOLTS TO MOUNT SIGNS TO POST AND 5/16" DIA. BOLTS TO ASSEMBLE THE VARIOUS POST SUPPORTS. EACH OF THESE BOLTS SHALL BE CARRIAGE BOLTS.

SIGN POSTS SHALL BE PAINTED GREEN; SIGNS SHALL NOT BE PAINTED, AND ALL SIGN POSTS SHALL BE PLUMB.

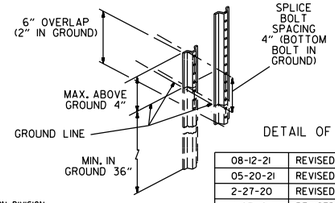

DETAIL OF SPLICES

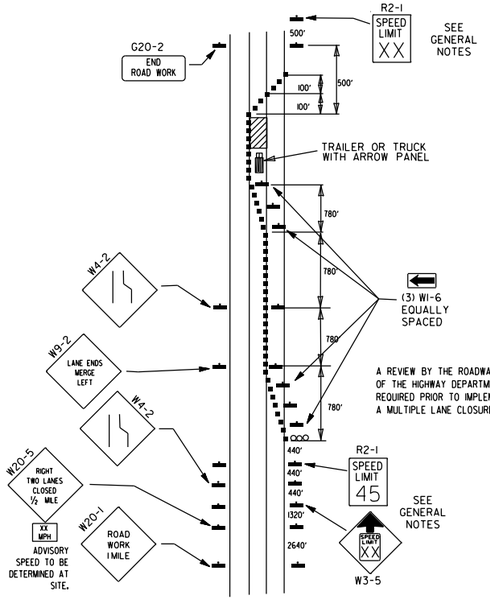

A REVIEW BY THE ROADWAY DESIGN DIVISION OF THE HIGHWAY DEPARTMENT WILL BE REQUIRED PRIOR TO IMPLEMENTING A MULTIPLE LANE CLOSURE.

(D) TYPICAL APPLICATION - CLOSING MULTIPLE LANES OF A MULTILANE HIGHWAY.

DATE	REVISION	FILMED
08-12-21	REVISED TRAFFIC CONTROL DEVICES AND NOTES	
05-20-21	REVISED NOTE 10	
2-27-20	REVISED TRAFFIC CONTROL DEVICES DETAILS	
11-07-19	REVISED NOTE 9, ADDED NOTE 11	
7-25-19	REVISED TRAFFIC CONTROL DEVICES DETAILS	
9-2-15	REVISED NOTE 2 & REPLACED R2-5A WITH W3-5	
10-15-09	ADDED REFERENCE TO MASH	
11-20-08	REVISED SIGN DESIGNATIONS	
11-18-04	ADDED NOTE	
10-1-98	ADDED NOTE	
4-03-97	ADDED (SP) TO W6-1& REVISED TRAFFIC CONTROL DEVICES NOTE	
10-18-96	ADDED R55-1	
10-12-95	MOVED UPPER SPLICE	
6-8-95	REVISED SPLICE DETAIL, TEXT	6-8-95
2-2-95	REVISED PER PART VI, MUTCD, SEPT. 3, 1993	
8-15-91	DRAWN AND PLACED IN USE	

ARKANSAS STATE HIGHWAY COMMISSION

STANDARD TRAFFIC CONTROLS FOR HIGHWAY CONSTRUCTION

STANDARD DRAWING TC-3

REINFORCING BAR TABLE PER BARRIER UNIT

MARK	LOCATION	BAR SIZE	(NO. BARS)	SKETCH
H-1	HORIZONTAL IN BARRIER TIED INSIDE V-1 BARS	#5	(6)	19'-3"
H-2	CENTERED ABOVE DRAIN SLOTS LONG. & TRANSVERSELY	#5	(6)	6'-6"
H-3	TIED ABOVE H-1 BARS TO SUPPORT H-2, TIED TO V-1	#4	(2)	1'-6"
S-1	OVER LIFT HOLES	#4	(2)	2'-5", LIFTING HOLE, 90°, 3 3/8" R
S-2	HORIZ. AROUND SLOTS BETWEEN V-1'S @ DRAIN SLOTS	#4	(2)	1 1/2" R, SLOTS, 7", 1'-6", 1" MIN. CLEAR TO BAR; 5'-1" BAR W/(4) 1 1/2" R BENDS & MIN. 1'-0" OVERLAP
V-1	VERTICAL IN BARRIER(3) EACH END & (2) AT EACH DRAIN SLOTS	#5	(16)	TOTAL LENGTH 4'-9"; 2 3/16" R; 12°; 1 1/2"; 9"; 2'-1 3/8"; 4 3/8"

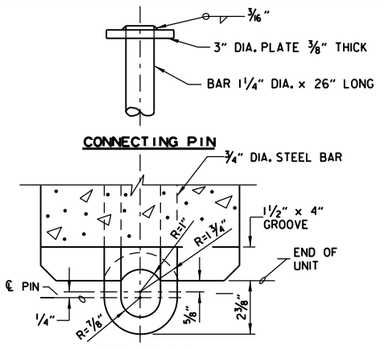

SECTION E-E

CONNECTION DETAILS

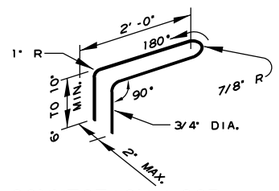

CONNECTION LOOP

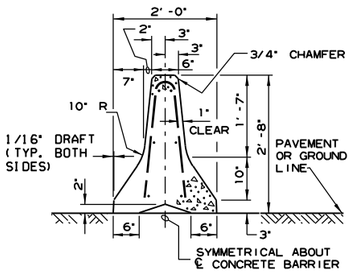

SECTION A-A

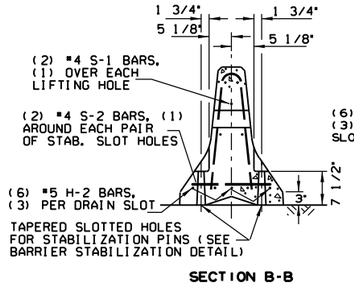

SECTION B-B

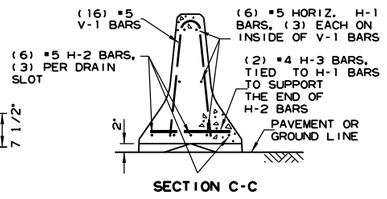

SECTION C-C

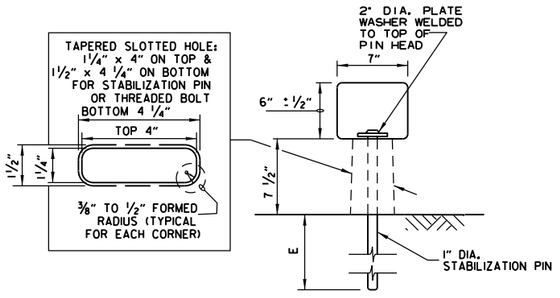

BARRIER STABILIZATION DETAIL

ROADWAY SECTION

(E) 4" - CONCRETE PAVEMENT
8" - ASPHALT PAVEMENT
12" - SHOULDER AREAS

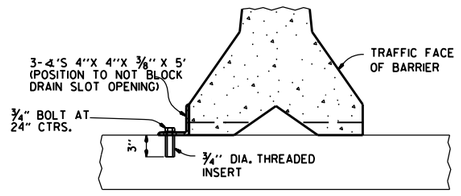

NOTE: " THREADED INSERTS SHALL BE CAST IN PLACE FOR ALL NEW BRIDGE DECKS AND DRILLED AND GROUTED FOR EXISTING BRIDGE DECKS. INSERTS SHALL HAVE A MINIMUM ULTIMATE LOAD CAPACITY OF 8000 LBS. IN TENSION. AFTER REMOVAL OF BARRIER, BOLTS, AND ANGLES, THE INSERTS SHALL BE FILLED WITH APPROVED NON-SHRINK EPOXY.

BARRIER STABILIZATION DETAIL

BRIDGE DECKS

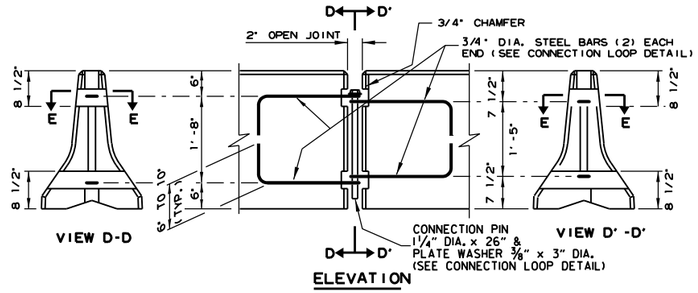

ELEVATION

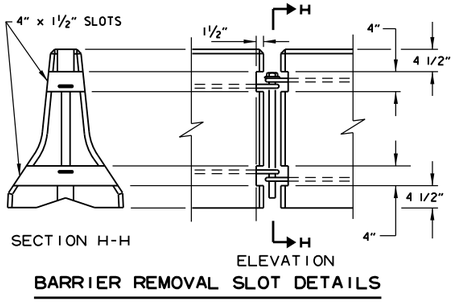

BARRIER REMOVAL SLOT DETAILS

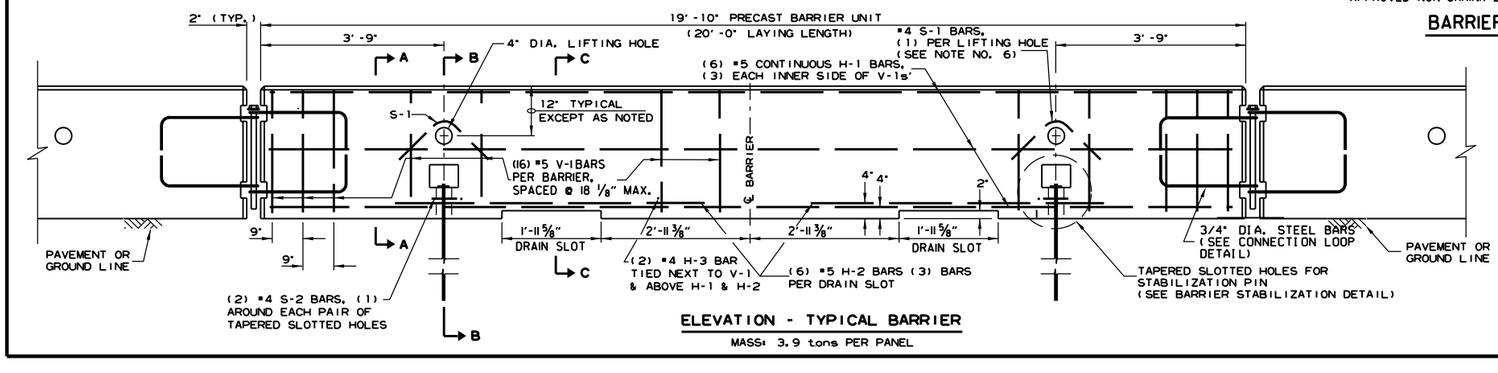

ELEVATION - TYPICAL BARRIER

MASS: 3.9 tons PER PANEL

GENERAL NOTES

(1) THE CONTRACTOR SHALL FURNISH THE PRECAST CONCRETE BARRIER UNITS AND SHALL BE RESPONSIBLE FOR THE MANUFACTURE, SHIPMENT, STORAGE, PLACEMENT AND REMOVAL. AT THE COMPLETION OF THE PROJECT, THE PRECAST UNITS WILL REMAIN THE PROPERTY OF THE CONTRACTOR.

(2) MATERIALS SHALL MEET THE FOLLOWING MINIMUM REQUIREMENTS:
CONCRETE: 2500 PSI COMPRESSIVE STRENGTH AT 28 DAYS.
REINFORCING STEEL: AASHTO M 31 OR M 53, GRADE 60
STRUCTURAL STEEL: AASHTO-M270 GRADE 36 SHALL BE USED FOR THE CONNECTION PIN, CONNECTION LOOPS, AND STABILIZATION PINS. A ONE PIECE PIN WITH A 3" ROUNDED TOP MAY BE USED IN PLACE OF THE DETAILED CONNECTION PIN.
DELINEATORS: DELINEATORS SHALL BE MOUNTED AT 10' SPACING ON TOP OF PRECAST BARRIER.

IN APPLICATIONS WHERE BARRIER WALL IS WITHIN 6 FEET OF A TRAFFIC LANE, ADDITIONAL DELINEATORS SHALL BE PLACED ON THE BARRIER AT 10' SPACING APPROXIMATELY ONE (1) FOOT FROM THE TOP OF THE BARRIER. DELINEATORS SHALL BE ON THE ARDOT QUALIFIED PRODUCTS LIST FOR CONSTRUCTION CONCRETE BARRIER MARKERS.
DELINEATOR COLOR SHALL BE IN ACCORDANCE WITH THE MANUAL ON UNIFORM TRAFFIC CONTROL DEVICES.
PAYMENT FOR DELINEATORS SHALL BE CONSIDERED INCLUDED IN THE PRICE BID PER LIN. FT. FOR "FURNISHING AND INSTALLING PRECAST CONCRETE BARRIER". THE CONTRACTOR SHALL CERTIFY TO THE ENGINEER THAT THE MATERIAL AND THE DESIGN USED IN THE PRECAST BARRIER UNITS MEETS THE REQUIREMENTS AS SHOWN ON THIS STANDARD DRAWING.

(3) OTHER PRECAST CONCRETE BARRIERS THAT HAVE BEEN CRASH TESTED AND APPROVED BY THE FEDERAL HIGHWAY ADMINISTRATION TO MEET THE REQUIREMENTS OF MANUAL FOR ASSESSING SAFETY HARDWARE (MASH) WILL BE ACCEPTED IN LIEU OF THE BARRIER SHOWN. DRAIN SLOTS SHALL BE PROVIDED AS NEEDED OR AS DIRECTED BY THE ENGINEER. THE CONTRACTOR SHALL FURNISH A CERTIFICATION OF MANUAL FOR ASSESSING SAFETY HARDWARE (MASH) COMPLIANCE FOR ANY OTHER TYPES OF PRECAST BARRIER TO BE USED. THE CERTIFICATION SHALL STATE THAT THE PRECAST CONCRETE BARRIER MEETS THE REQUIREMENTS OF MANUAL FOR ASSESSING SAFETY HARDWARE (MASH). MIXING OF SHAPES WILL NOT BE ALLOWED IN A CONTINUOUS LINE OF UNITS.

(4) DOWEL HOLES IN PAVEMENT OR BRIDGE SLABS THAT ARE TO REMAIN IN PLACE SHALL BE FILLED. HOLES IN CONCRETE PAVEMENT AND BRIDGE SLABS SHALL BE FILLED WITH AN APPROVED NON-SHRINK EPOXY GROUT. HOLES IN ASPHALT PAVEMENT SHALL BE FILLED WITH AN APPROVED ASPHALT JOINT FILLER. PAYMENT FOR DRILLING AND FILLING HOLES TO BE INCLUDED IN THE PRICE FOR VARIOUS BARRIER ITEMS.

(5) ATTACH UNITS TO ROADWAY SURFACE WITH STABILIZATION PINS AND TO DECK SLABS USING BOLTS WHEN REQUIRED.

(6) A 4" WHITE PVC SLEEVE MAY BE USED TO FORM THE LIFTING HOLE AND IF USED THE SLEEVE IS TO BE LEFT IN PLACE.

DATE	REVISION	FILMED
11-07-19	REVISED NOTE 3	
2-27-14	REVISED BARRIER STABILIZATION DETAIL	
10-15-09	ADDED REFERENCE TO WASH	
8-5-09	REV. NOTE 3 CONCERNING DRAIN SLOTS	
11-29-07	REVISED NOTE 3	
5-25-06	DELETED GENERAL NOTE 7	
11-18-04	REVISED BARRIER STABILIZATION DETAIL BRIDGE DECKS	
4-10-03	REVISED GENERAL NOTE 2	
8-22-02	ISSUED NEW DRAWING	

ARKANSAS STATE HIGHWAY COMMISSION

STANDARD TRAFFIC CONTROLS FOR HIGHWAY CONSTRUCTION - TEMPORARY PRECAST BARRIER

STANDARD DRAWING TC-4

Ⓐ 4 feet or greater preferred. If less than 4 feet, Precast Units shall be connected to slab (SEE BARRIER STABILIZATION DETAIL-BRIDGE DECKS STD. DRWG. TC-4)

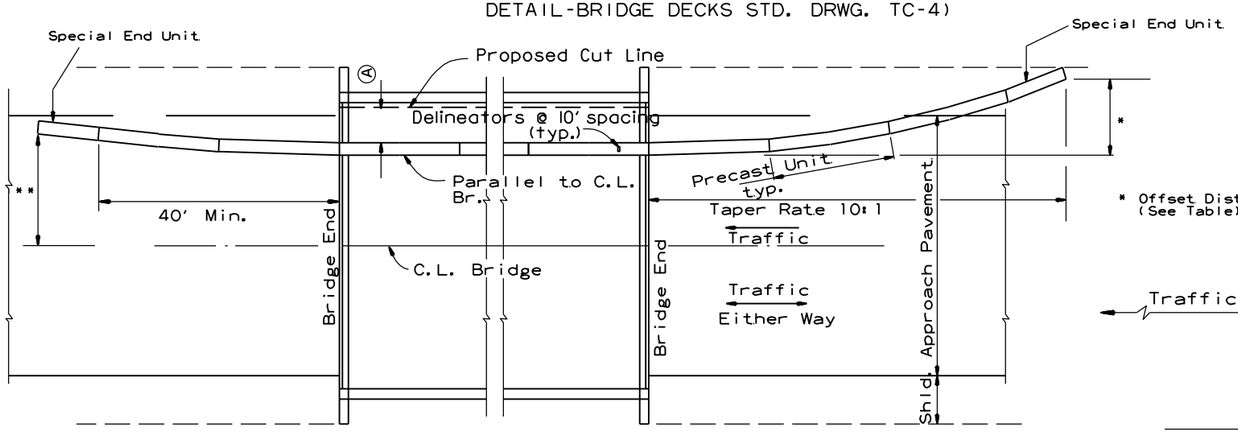

* Offset Distance (See Table)

BARRIER PLACEMENT ALONG BRIDGE WITH OFFSET

No Scale

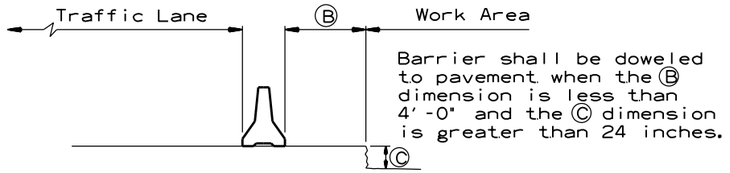

Barrier shall be doweled to pavement when the Ⓑ dimension is less than 4'-0" and the Ⓒ dimension is greater than 24 inches.

SECTION J-J

No Scale

** Offset Distance for Two Way Traffic Only

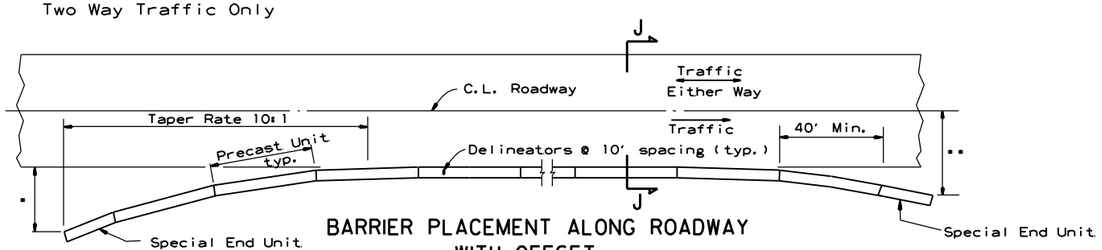

BARRIER PLACEMENT ALONG ROADWAY WITH OFFSET

No Scale

* Offset Distance (See Table)

** Offset Distance For Two Way Traffic Only

Offset Distance Table

Speed (MPH)	Offset Distance (FT.)
≤ 45	12
> 45	18

If offset distance is not attainable, then see "Barrier Placement With Attenuator" Detail shown below.

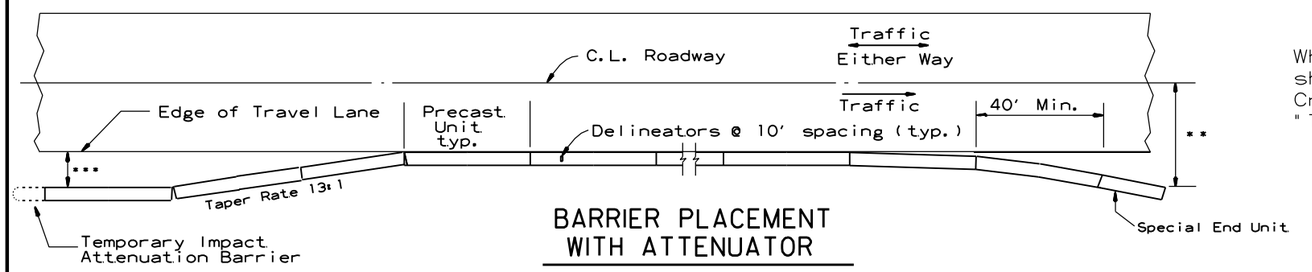

BARRIER PLACEMENT WITH ATTENUATOR

No Scale

** Offset Distance For Two Way Traffic Only

*** Min. 3'-0" From Edge of Travel Lane to Nearest Edge of Attenuator

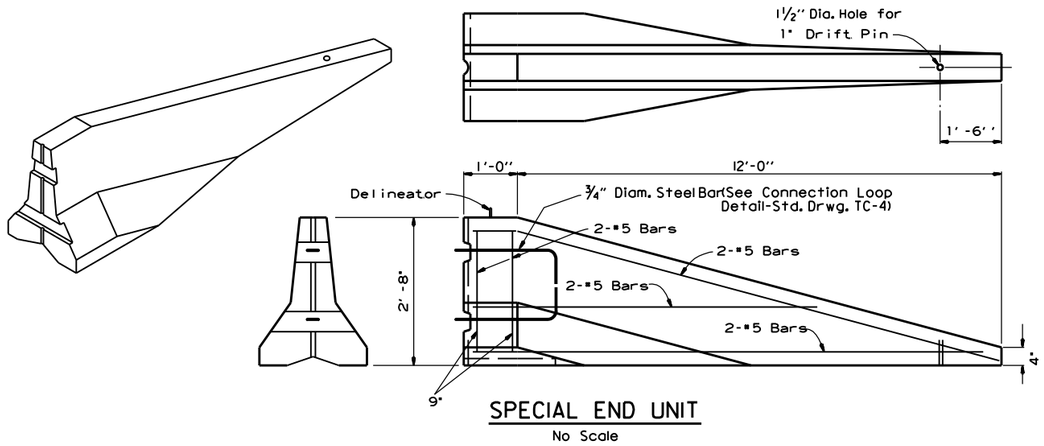

SPECIAL END UNIT

No Scale

General Notes

When shown on the Plans, the ends of the Temporary Precast Concrete Barrier shall be protected with a Manual For Assessing Safety Hardware (MASH) approved Crash Cushion. Payment for Crash Cushions shall be made under the item of "Temporary Impact Attenuation Barrier."

DATE	REVISION	FILMED
11-07-19	REVISED NOTE	
10-15-09	ADDED REFERENCE TO MASH	
5-25-06	REVISED BARRIER PLACEMENT	
8-22-02	ISSUED NEW DRAWING	

ARKANSAS STATE HIGHWAY COMMISSION

STANDARD TRAFFIC CONTROLS FOR HIGHWAY CONSTRUCTION - TEMPORARY PRECAST BARRIER

STANDARD DRAWING TC-5

GENERAL NOTES

INSTALL A MINIMUM OF 2 UPSLOPE STAKES AND 4 DOWNSLOPE STAKES AT AN ANGLE TO WEDGE WATTLE TO BOTTOM OF DITCH.

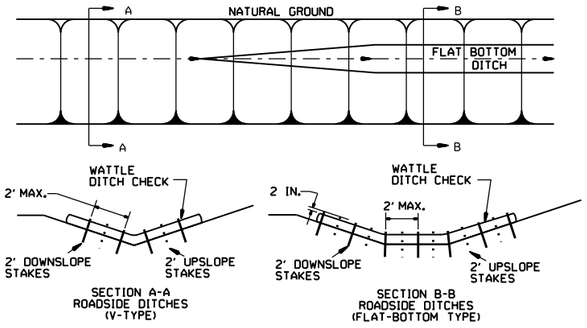

WATTLE DITCH CHECK (E-1)

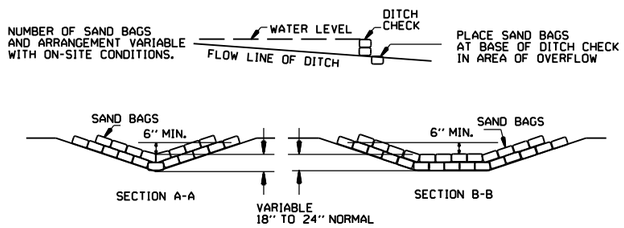

SAND BAG DITCH CHECK (E-5)

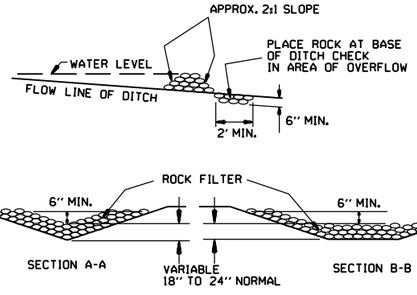

ROCK DITCH CHECK (E-6)

GENERAL NOTES

GEOTEXTILE FABRIC (TYPE 4) IN ACCORDANCE WITH SECTION 625

GEOTEXTILE FABRIC SHALL BE SPLICED TOGETHER WITH A SEWN SEAM ONLY AT A SUPPORT POST OR TWO SECTIONS OF FENCE MAY BE OVERLAPPED INSTEAD. PAYMENT OF ADDITIONAL MATERIAL FOR OVERLAP WILL NOT BE MADE.

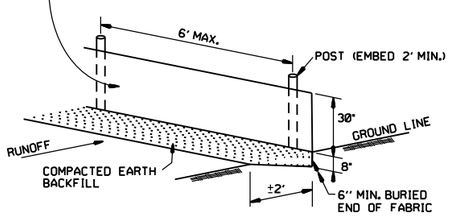

SILT FENCE (E-11)

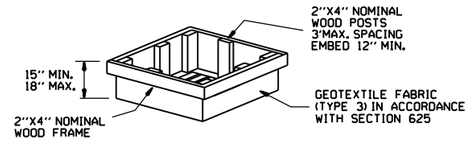

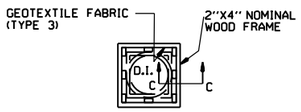

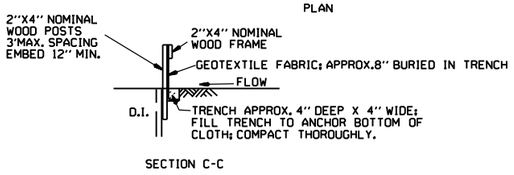

DROP INLET SILT FENCE (E-7)

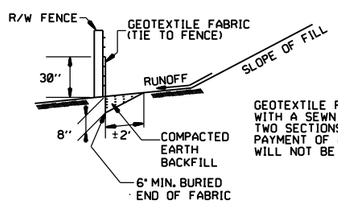

GENERAL NOTES

GEOTEXTILE FABRIC SHALL BE SPLICED TOGETHER WITH A SEWN SEAM ONLY AT A SUPPORT POST, OR TWO SECTIONS OF FENCE MAY BE OVERLAPPED INSTEAD. PAYMENT OF ADDITIONAL MATERIAL FOR OVERLAP WILL NOT BE MADE.

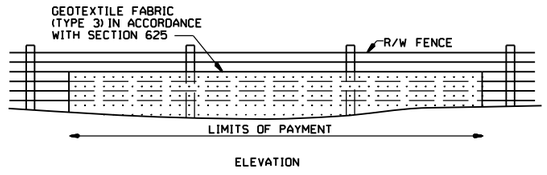

SILT FENCE ON R/W FENCE (E-4)

GENERAL NOTES

1. STRAW BALES SHALL BE INSTALLED SO THAT THE BINDINGS ARE ORIENTED AROUND THE SIDES RATHER THAN ALONG THE TOPS AND BOTTOMS OF THE BALES. THE BALES SHALL BE A MINIMUM OF 30 INCHES IN LENGTH.

2. NO GAPS SHALL BE LEFT BETWEEN BALES.

3. BALED STRAW FILTER BARRIERS COMPLETED AND ACCEPTED WILL BE MEASURED BY THE BALE IN PLACE AS AUTHORIZED BY THE ENGINEER AND WILL BE PAID FOR AT THE CONTRACT UNIT PRICE BID PER BALE FOR BALED STRAW DITCH CHECKS.

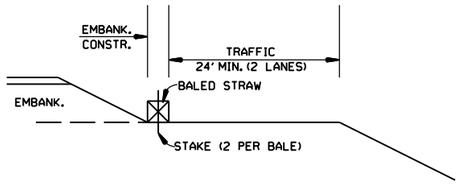

BALED STRAW FILTER BARRIER (E-2)

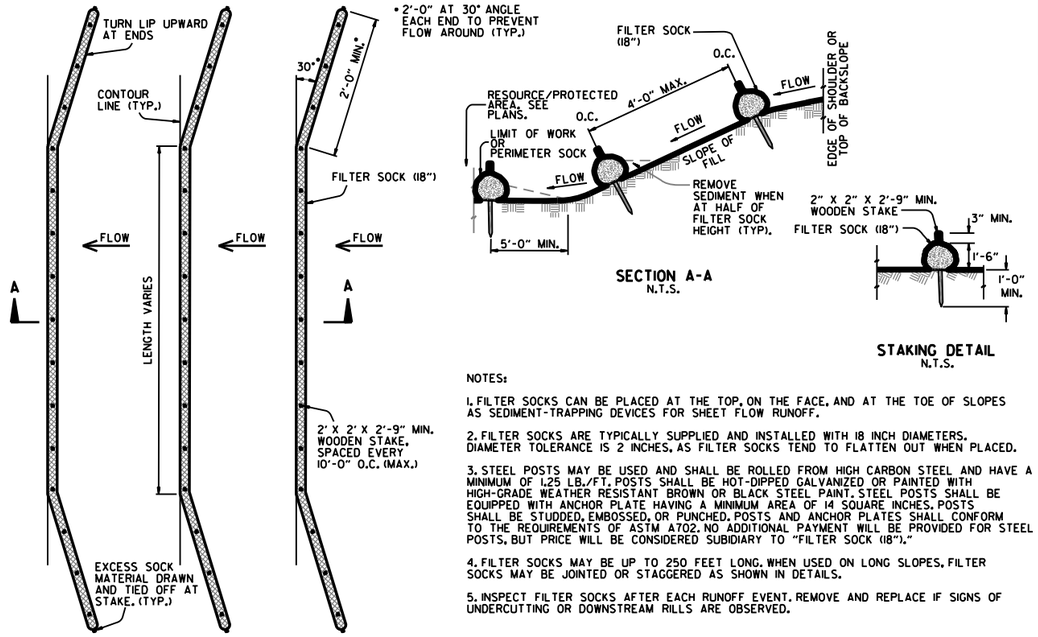

NOTES:

1. FILTER SOCKS CAN BE PLACED AT THE TOP, ON THE FACE, AND AT THE TOE OF SLOPES AS SEDIMENT-TRAPPING DEVICES FOR SHEET FLOW RUNOFF.

2. FILTER SOCKS ARE TYPICALLY SUPPLIED AND INSTALLED WITH 18 INCH DIAMETERS. DIAMETER TOLERANCE IS 2 INCHES, AS FILTER SOCKS TEND TO FLATTEN OUT WHEN PLACED.

3. STEEL POSTS MAY BE USED AND SHALL BE ROLLED FROM HIGH CARBON STEEL AND HAVE A MINIMUM OF 1.25 LB./FT. POSTS SHALL BE HOT-DIPPED GALVANIZED OR PAINTED WITH HIGH-GRADE WEATHER RESISTANT BROWN OR BLACK STEEL PAINT. STEEL POSTS SHALL BE EQUIPPED WITH ANCHOR PLATE HAVING A MINIMUM AREA OF 14 SQUARE INCHES. POSTS SHALL BE STUDDED, EMBOSSED, OR PUNCHED. POSTS AND ANCHOR PLATES SHALL CONFORM TO THE REQUIREMENTS OF ASTM A702. NO ADDITIONAL PAYMENT WILL BE PROVIDED FOR STEEL POSTS, BUT PRICE WILL BE CONSIDERED SUBIDIARY TO "FILTER SOCK (18")."

4. FILTER SOCKS MAY BE UP TO 250 FEET LONG. WHEN USED ON LONG SLOPES, FILTER SOCKS MAY BE JOINTED OR STAGGERED AS SHOWN IN DETAILS.

5. INSPECT FILTER SOCKS AFTER EACH RUNOFF EVENT. REMOVE AND REPLACE IF SIGNS OF UNDERCUTTING OR DOWNSTREAM RILLS ARE OBSERVED.

FILTER SOCK ALONG SLOPE (E-3)

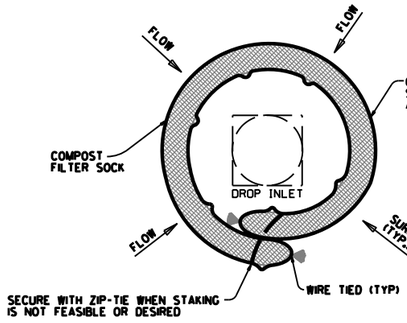

DROP INLET PLAN VIEW
N.T.S.

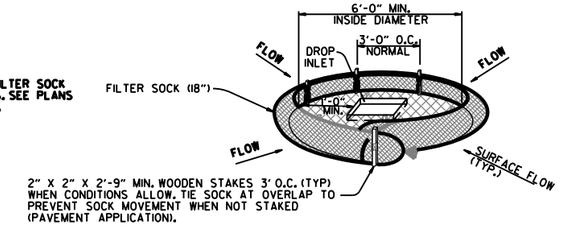

DROP INLET PERSPECTIVE VIEW
N.T.S.

NOTES:

1. OVERLAP ENDS OF SOCK (1' MIN. 3' MAX.).

2. USE 18" DIA. SOCK IN NON-TRAFFIC AREAS OR AREAS WHERE SAFETY IS NOT A CONCERN.

COMPOST FILTER SOCK DROP INLET PROTECTION (E-13)

DATE	REVISION	FILMED
11-16-17	ADDED FILTER SOCK E-3 AND E-13	
12-15-11	DELETED BALED STRAW DITCH CHECK & ADDED WATTLE DITCH CHECK	
11-18-98	ADDED NOTES	
07-02-98	ADDED BALED STRAW FILTER BARRIER (E-2)	
07-20-95	REVISED SILT FENCE E-4 AND E-11	7-20-95
07-15-94	REV. E-4 & E-11 MIN. 13" BURIED END OF FABRIC	
06-02-94	REVISED E-1,4,7 & 11; DELETED E-2 & 3	6-2-94
04-01-93	REDRAWN	
10-01-92	REDRAWN	
08-02-76	ISSUED R.D.M.	298-7-28-76

ARKANSAS STATE HIGHWAY COMMISSION

TEMPORARY EROSION CONTROL DEVICES

STANDARD DRAWING TEC-1

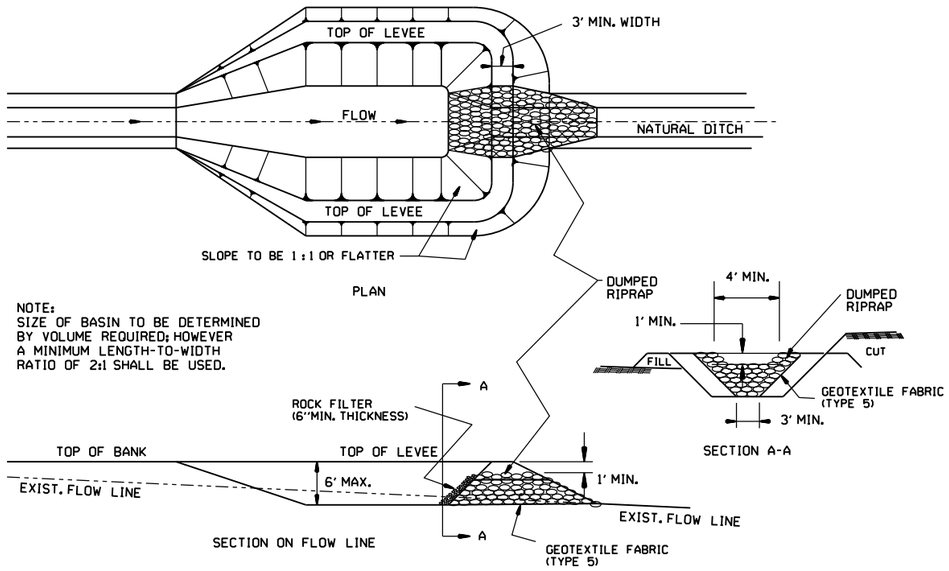

SEDIMENT BASIN WITH RIPRAP OUTLET (E-9)

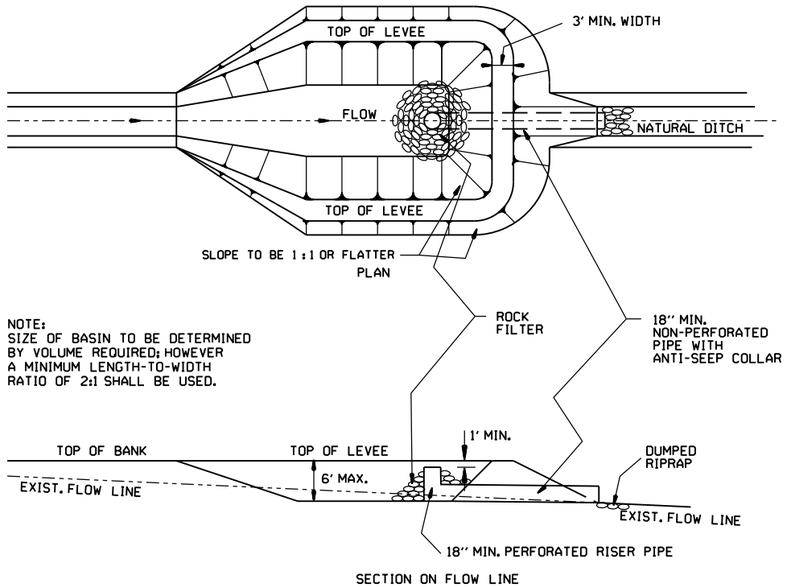

SEDIMENT BASIN WITH PIPE OUTLET (E-10)

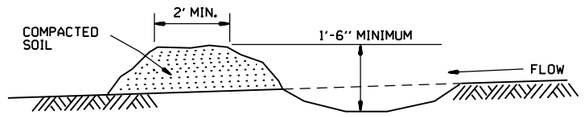

DIVERSION DITCH (E-8)

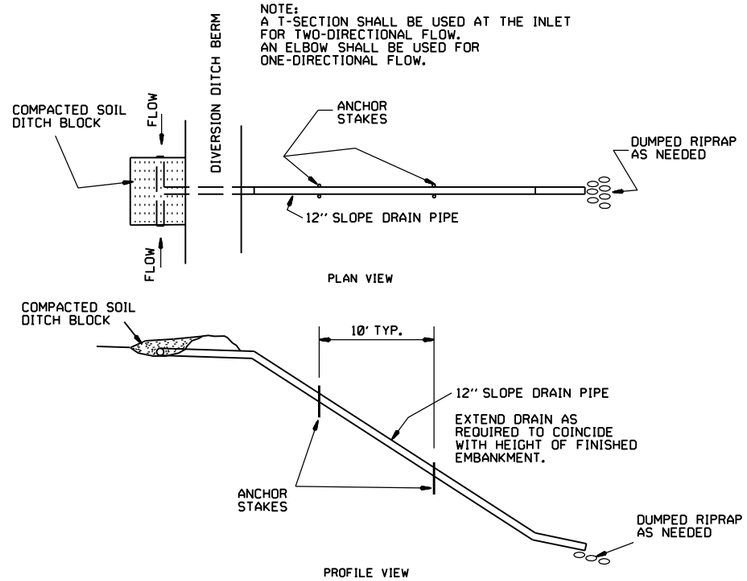

SLOPE DRAIN (E-12)

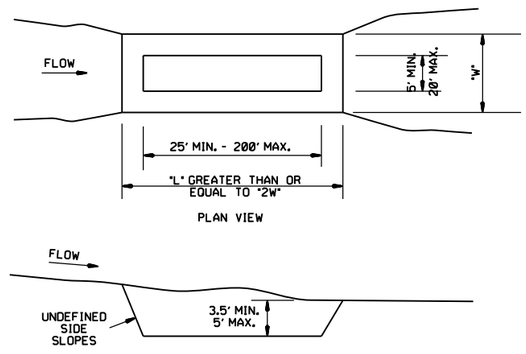

SEDIMENT BASIN (E-14)

DATE	REVISION	FILMED
6-2-94	Revised E-8 & E-12; Added E-14 & Deleted E-13	
4-1-93	ISSUED	

ARKANSAS STATE HIGHWAY COMMISSION

TEMPORARY EROSION CONTROL DEVICES

STANDARD DRAWING TEC-2

CLEARING AND GRUBBING

CONSTRUCTION SEQUENCE

1. PLACE PERIMETER CONTROLS (I.E. SILT FENCES , DIVERSION DITCHES, SEDIMENT BASINS, ETC.)
2. PERFORM CLEARING AND GRUBBING OPERATION.

EXCAVATION

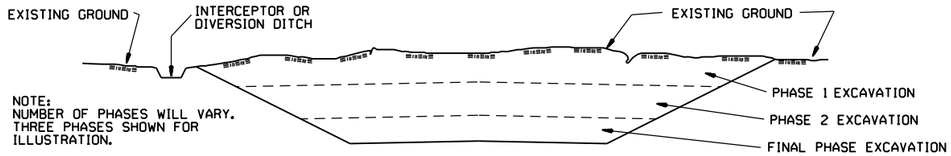

GENERAL NOTE

ALL CUT SLOPES SHALL BE DRESSED, PREPARED, SEEDED, AND MULCHED AS THE WORK PROGRESSES. SLOPES SHALL BE EXCAVATED AND STABILIZED IN EQUAL INCREMENTS NOT TO EXCEED 25 FEET, MEASURED VERTICALLY.

CONSTRUCTION SEQUENCE

1. EXCAVATE AND STABILIZE INTERCEPTOR AND/OR DIVERSION DITCHES.
2. PERFORM PHASE 1 EXCAVATION. PLACE PERMANENT OR TEMPORARY SEEDING.
3. PERFORM PHASE 2 EXCAVATION. PLACE PERMANENT OR TEMPORARY SEEDING.
4. PERFORM FINAL PHASE OF EXCAVATION. PLACE PERMANENT OR TEMPORARY SEEDING. STABILIZE DITCHES. CONSTRUCT DITCH CHECKS, DIVERSION DITCHES, SEDIMENT BASINS, OR OTHER EROSION CONTROL DEVICES AS REQUIRED.

EMBANKMENT

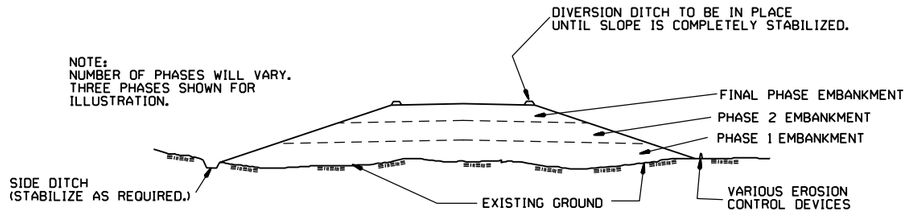

GENERAL NOTE

ALL EMBANKMENT SLOPES SHALL BE DRESSED, PREPARED, SEEDED, AND MULCHED AS THE WORK PROGRESSES. SLOPES SHALL BE CONSTRUCTED AND STABILIZED IN EQUAL INCREMENTS NOT TO EXCEED 25 FEET, MEASURED VERTICALLY.

CONSTRUCTION SEQUENCE

1. CONSTRUCT DIVERSION DITCHES, DITCH CHECKS, SEDIMENT BASINS, SILT FENCES, OR OTHER EROSION CONTROL DEVICES AS SPECIFIED.
2. PLACE PHASE 1 EMBANKMENT WITH PERMANENT OR TEMPORARY SEEDING. PROVIDE DIVERSION DITCHES AND SLOPE DRAINS IF EMBANKMENT CONSTRUCTION IS TO BE TEMPORARILY ABANDONED FOR A PERIOD OF GREATER THAN 21 DAYS.
3. PLACE PHASE 2 EMBANKMENT WITH PERMANENT OR TEMPORARY SEEDING. PROVIDE DIVERSION DITCHES AND SLOPE DRAINS IF EMBANKMENT CONSTRUCTION IS TO BE TEMPORARILY ABANDONED FOR A PERIOD OF GREATER THAN 21 DAYS.
4. PLACE FINAL PHASE OF EMBANKMENT WITH PERMANENT OR TEMPORARY SEEDING. PLACE DIVERSION DITCHES AND SLOPE DRAINS AND MAINTAIN UNTIL ENTIRE SLOPE IS STABILIZED.

11-03-94	CORRECTED SPELLING	
6-2-94	Drawn & Issued	6-2-94
DATE	REVISION	FILMED

ARKANSAS STATE HIGHWAY COMMISSION

TEMPORARY EROSION CONTROL DEVICES

STANDARD DRAWING TEC-3

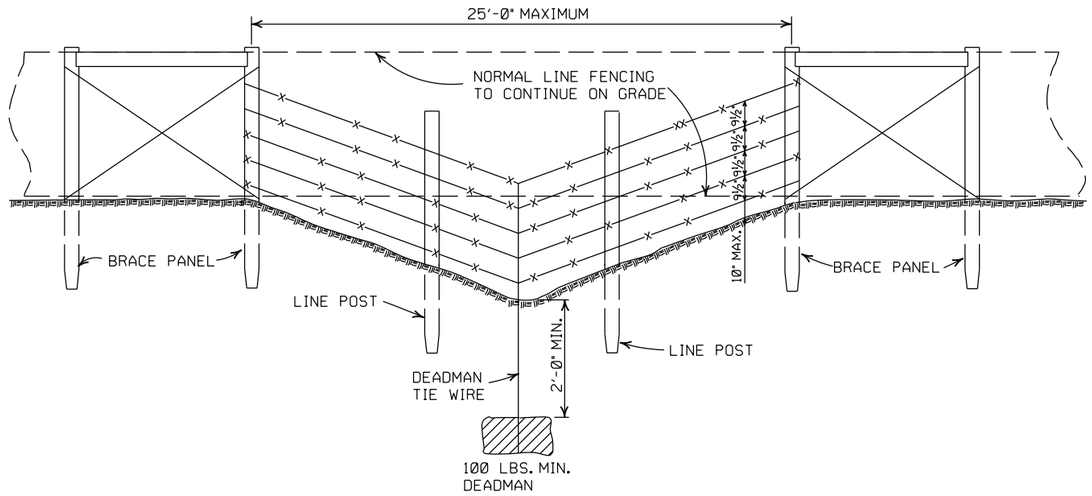

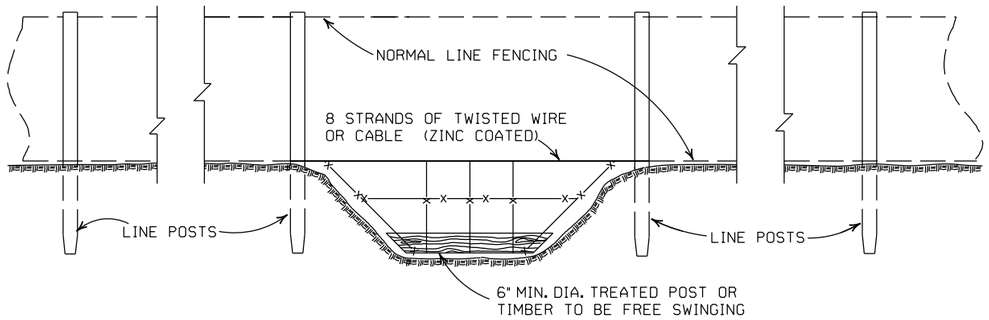

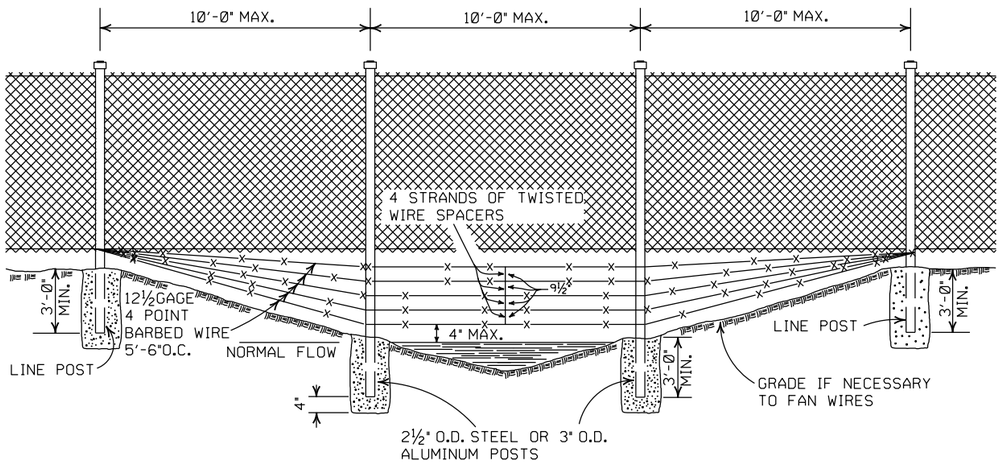

GENERAL NOTES:

THESE INSTALLATIONS TO BE USED WHERE NORMAL FENCING INSTALLATION WOULD CAUSE THE COLLECTING OF DRIFT IN THE CHANNEL OR THE DEPRESSION WILL NOT PERMIT NORMAL INSTALLATION. INSTALLATIONS WILL BE MADE ONLY WHERE DIRECTED BY THE ENGINEER.

WHEN A FENCE LINE APPROACHES A DITCH, GULLY OR DEPRESSION, THE LAST POST ON LEVEL GROUND SHALL BE PLACED CLOSE ENOUGH TO THE EDGE OF THE DROP OFF THAT THE FENCE MAY BE STRUNG TO THE POST IN THE DEPRESSION WITHOUT TOUCHING THE GROUND.

IN TERRAIN OF SUCH EXTREME IRREGULARITY THAT MINOR GRADING WILL NOT BE FEASIBLE, THE NORMAL FENCE SHALL CONTINUE ON GRADE AND THE GULLIES OR DEPRESSIONS TREATED BY AUXILIARY FENCES AS SHOWN.

PAYMENT FOR THE TYPE INSTALLATION USED WILL NOT BE MADE DIRECTLY BUT WILL BE INCLUDED IN THE CONTRACT UNIT PRICE BID FOR WIRE FENCE OR CHAIN LINK FENCE.

DATE	REVISION	FILMED
4-20-79	REVISED TOP RAIL & TENSION WIRE	696-4-20-79
10-2-72	REVISED AND REDRAWN	529-10-2-72

ARKANSAS STATE HIGHWAY COMMISSION

WIRE FENCE WATER GAPS

STANDARD DRAWING WF-2

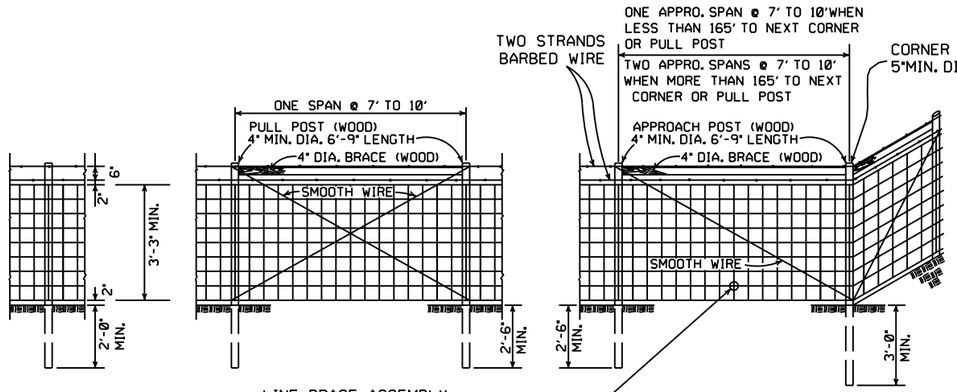

TYPE C FENCE (WOOD POSTS)

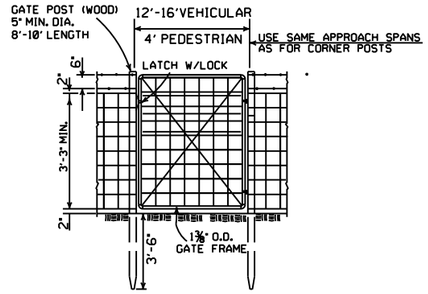

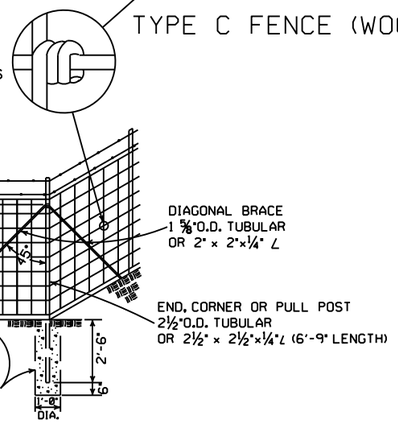

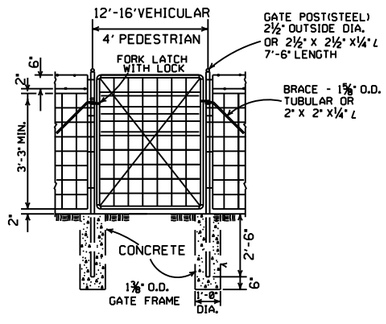

NOTE: STEEL LINE POSTS SHALL BE 6'-6" MINIMUM LENGTH.

TYPE C FENCE (STEEL POSTS)

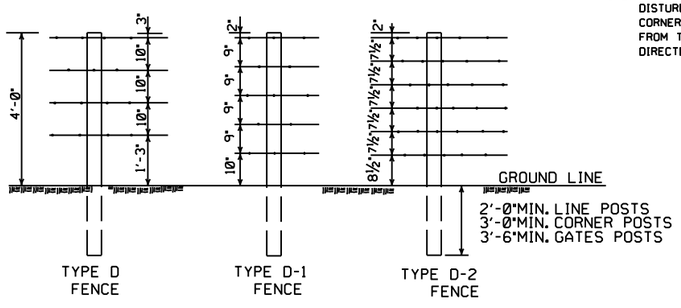

NOTE: SPACING AND SIZE (EXCEPT LENGTH) OF POSTS, APPROACH SPANS, PULL POST ASSEMBLIES, AND CORNER BRACING FOR TYPE D FENCE SHALL CONFORM TO TYPE C FENCE. USE GALVANIZED STAPLES ON WOOD POSTS AND APPROVED FASTENERS ON STEEL POSTS.

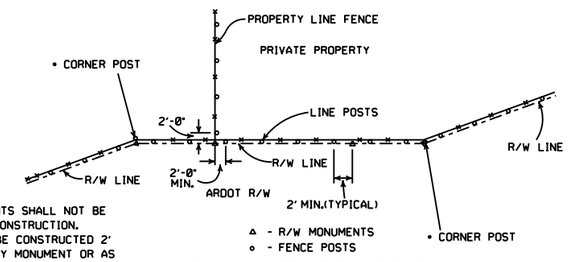

• NOTE: RIGHT-OF-WAY MONUMENTS SHALL NOT BE DISTURBED BY FENCE CONSTRUCTION. CORNER POSTS SHALL BE CONSTRUCTED 2' FROM THE RIGHT-OF-WAY MONUMENT OR AS DIRECTED BY THE ENGINEER.

RIGHT-OF-WAY FENCE LOCATION

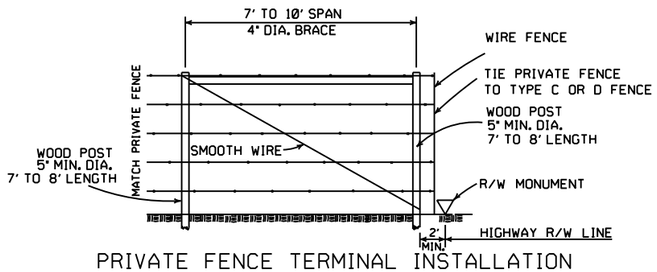

PRIVATE FENCE TERMINAL INSTALLATION

WHERE EXISTING FENCE CONSISTS OF STEEL POSTS, USE END POST ASSEMBLY AS SHOWN IN TYPE C FENCE OR OTHER END POST ASSEMBLY AS APPROVED BY THE ENGINEER.

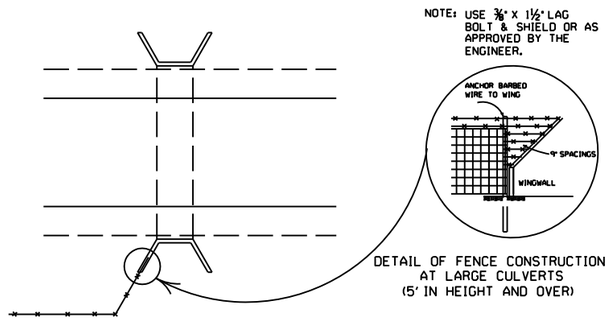

DETAIL OF FENCE CONSTRUCTION AT LARGE CULVERTS (5' IN HEIGHT AND OVER)

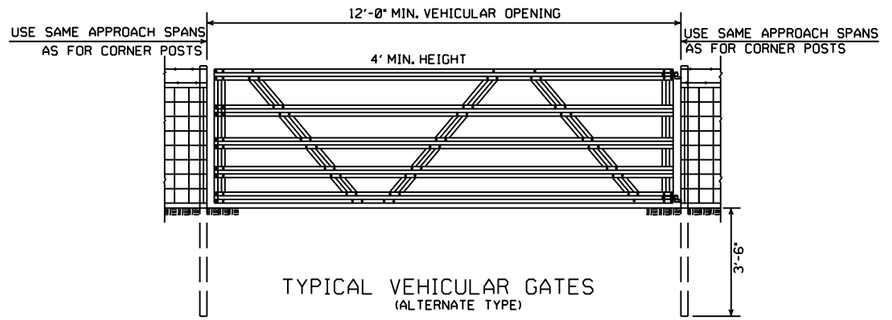

TYPICAL VEHICULAR GATES

(ALTERNATE TYPE)

OTHER STYLE VEHICULAR GATES MAY BE USED WITH THE APPROVAL OF THE ENGINEER. THE METHOD OF SECURING GATE (LATCH AND/OR LOCK)SHALL MEET THE APPROVAL OF THE ENGINEER.

GENERAL NOTES:

STEEL LINE POSTS SHALL BE PAINTED OR GALVANIZED. TUBULAR END, CORNER, PULL, OR DIAGONAL BRACES MUST CONFORM TO THE DIMENSIONS AND WEIGHTS SPECIFIED ON STANDARD DRAWING WF-3 (CHAIN LINK). APPROVED ALTERNATES ARE ACCEPTABLE.
AN ACCEPTABLE TOLERANCE IN LENGTH OF TUBULAR OR WOODEN POSTS SHALL BE - 1" TO +2".
TUBULAR POSTS MUST BE PAINTED OR GALVANIZED.

THE CONTRACTOR SHALL FURNISH AT LEAST 25% OF TIMBER LINE POSTS OF 7 FOOT LENGTHS IN ORDER TO PROVIDE SUFFICIENT SET IN SOFT GROUND OR SMALL DEPRESSIONS.

DRIVEWAY GATES, EITHER SINGLE 12' TO 16' OR DOUBLE 6' TO 8' OPENING OF THE SAME TYPE AS THE PEDESTRIAN GATE, SHALL BE INSTALLED ON THE RIGHT SIDE OF EACH THROUGH LANE ROAD AT LARGE CULVERTS OR BRIDGE CROSS FENCE, FOR USE OF MAINTENANCE EQUIPMENT. LOCATION OF GATES TO BE SHOWN ON PLANS OR AS DESIGNATED BY THE ENGINEER.

AT STREAM CROSSINGS, THE FENCE SHALL NOT BE CONSTRUCTED ACROSS LARGE STREAMS. WHERE CLEARANCE IS SUFFICIENT FROM THE TOP OF THE BANK TO THE BRIDGE STRUCTURE A CROSS CONNECTION SHALL BE CONSTRUCTED BETWEEN THE FENCE ON EACH SIDE OF THE ROAD. WHERE THE CLEARANCE IS NOT SUFFICIENT, THE FENCE SHALL BE TERMINATED WITH CROSS CONNECTIONS AND END POSTS ADJACENT TO BRIDGE ABUTMENTS OR CULVERT WINGWALLS.

SPLICE FOR BARBED WIRE BETWEEN PULL POST ASSEMBLY SHALL BE BY THE "EYE METHOD" AS DESCRIBED AS FOLLOWS: THE ENDS OF THE BARBED WIRE SHALL BE BENT TO FORM A LOOP. THE LOOPS SHALL BE CONNECTED. AFTER THE LOOPS ARE CONNECTED THE ENDS OF THE WIRE SHALL BE WRAPPED AROUND THE PROJECTING WIRES A MINIMUM OF 4 TIMES FOR EACH WIRE LOOP.

SPLICE FOR WOVEN WIRE BETWEEN PULL POST SHALL BE BY THE "WESTERN UNION METHOD" AS DESCRIBED AS FOLLOWS: THE VERTICAL WIRES FOR EACH END OF THE FENCE FABRIC SHALL BE PLACED SIDE BY SIDE AND THE PROJECTING HORIZONTAL WIRES SHALL BE WRAPPED A MINIMUM OF 4 TIMES AROUND THE HORIZONTAL WIRES OF THE FIRST WEB.

STAPLE AT LEAST TOP, BOTTOM AND ALTERNATE WIRES OF WOVEN FABRIC FOR WOOD LINE POSTS.

DATE	REVISION	FILMED
8-22-02	REVISED GENERAL NOTES	
10-18-96	REVISED AASHTO	
11-22-95	REVISED R-O-W LOCATION DETAIL	
6-2-94	REVISED BARB WIRE AND ADDED CORNER POST NOTES	6-2-94
8-5-93	REVISED R/W INSTALLATION FENCE	8-5-93
10-1-92	ADDED STAPLE NOTE	10-1-92
8-15-91	ADDED TYPE D-2 FENCE	8-15-91
11-30-89	DELETED CLASS CONCRETE	11-30-89
7-15-88	ADDED SPLICE NOTE	700-7-15-88
10-30-87	GENERAL REVISIONS	549-10-30-87
11-1-84	MAX. POST SPACING MIN. WIRE GAUGE	507-11-1-84
1-4-83	MIN. DIA. LINE POST	648-1-4-83
3-2-81	TOLERANCE FOR POST LENGTH	722-3-2-81
12-1-72	ADDED D-1 & FENCE INSTALLATION	564-12-1-72
10-2-72	REVISED AND REDRAWN	540-10-2-72

ARKANSAS STATE HIGHWAY COMMISSION

WIRE FENCE TYPE C AND D

STANDARD DRAWING WF-4