DATE REVISED	DATE REVISED	FED.RD. DIST.NO.	STATE	JOB NO.	SHEET NO.	TOTAL SHEETS
01/03/24		6	ARK.	090523	1	103
		WAR EAGLE CREEK STR. & APPRS. (S)				

ARKANSAS DEPARTMENT OF TRANSPORTATION
CONSTRUCTION PLANS FOR STATE HIGHWAY

WAR EAGLE CREEK STR.

& APPRS. (S)

MADISON COUNTY

ROUTE 23 SECTION 9

FED. AID PROJ. BFP-0044(35)

JOB 090523

NOT TO SCALE

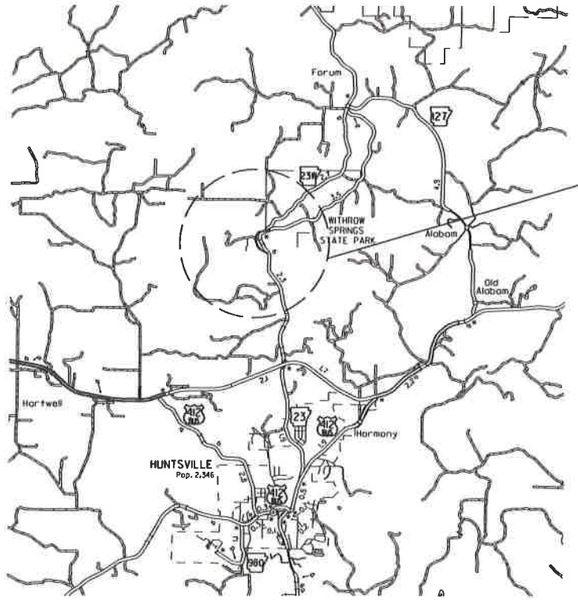

VICINITY MAP



ARK. HWY. DIST. NO. 9

BRIDGE DATA

① STA. 107+63.90 BR. END
BRIDGE NO. 07566
420'-0" CONTINOUS W-BEAM UNIT
40'-0" CLEAR RDWY.
422'-2½" TOTAL BRIDGE LENGTH
STA. 111+86.10 BR. END

DESIGN TRAFFIC DATA

DESIGN YEAR	2044
2024 ADT	2000
2044 ADT	2400
2044 DHV	264
DIRECTIONAL DISTRIBUTION	0.60
TRUCKS	5%
DESIGN SPEED	45 MPH

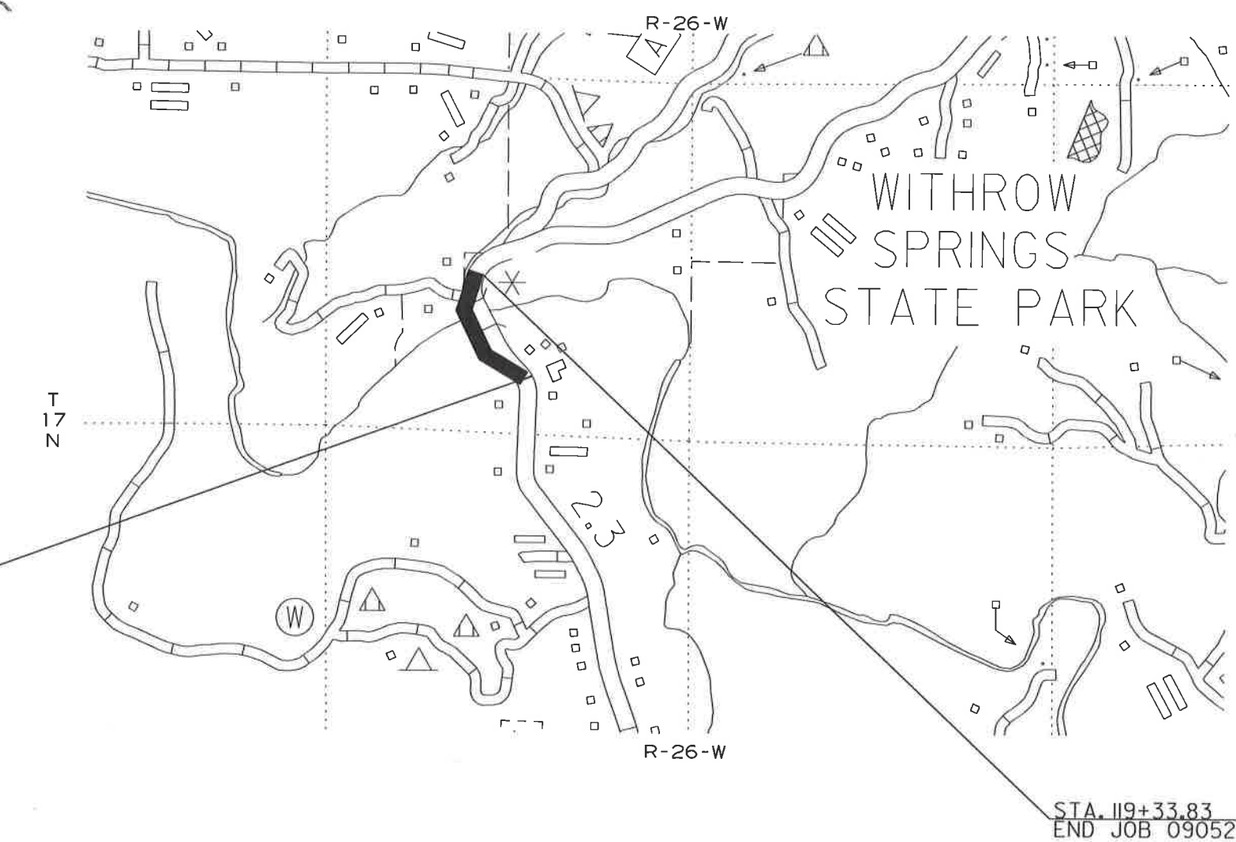



APPROVED

STATE OF ARKANSAS
LICENSED PROFESSIONAL ENGINEER
No. 14276
JARED D. WILEY

CHIEF ENGINEER - PRECONSTRUCTION

JAN 04 2024

	BEGIN PROJECT	MID-POINT OF PROJECT	END PROJECT
LATITUDE	N 36°08'52"	N 36°09'01"	N 36°09'10"
LONGITUDE	W 93°44'16"	W 93°44'26"	W 93°44'17"

LENGTH OF PROJECT CALCULATED ALONG C.L.

GROSS LENGTH OF PROJECT	1733.83	FEET	OR	0.328	MILES
NET " " ROADWAY	1311.62	"		0.248	MILES
NET " " BRIDGES	422.21	"		0.080	MILES
NET " " PROJECT	1733.83	"		0.328	MILES

mh39735 8/7/2023
R090523.DGN 8/7/2023

DATE REVISED	DATE REVISED	FED.RD. DIST.NO.	STATE	JOB NO.	SHEET NO.	TOTAL SHEETS
		6	ARK.	090523	2	103
		INDEX OF SHEETS				

STATE OF ARKANSAS
LICENSED PROFESSIONAL ENGINEER
No. 11425
TRINITY D. SMITH

Digitally signed by Trinity Smith
Date: 2023.11.21 12:34:40-06'00'

INDEX OF SHEETS

SHEET NO.	TITLE	BRIDGE NO.	DRWG.NO.
1	TITLE SHEET		
2	INDEX OF SHEETS		
3	STANDARD DRAWINGS AND GENERAL NOTES		
4	GOVERNING SPECIFICATIONS		
5 - 8	TYPICAL SECTIONS OF IMPROVEMENT		
9 - 12	SPECIAL DETAILS		
13 - 17	TEMPORARY EROSION CONTROL DETAILS		
18 - 21	MAINTENANCE OF TRAFFIC DETAILS		
22 - 23	PERMANENT PAVEMENT MARKING DETAILS		
24 - 28	QUANTITIES		
29	SCHEDULE OF BRIDGE QUANTITIES	07566	64451
30	SUMMARY OF QUANTITIES AND REVISIONS		
31 - 35	SURVEY CONTROL DETAILS		
36 - 40	PLAN AND PROFILE SHEETS		
41	LAYOUT OF BRIDGE HIGHWAY 23 OVER WAR WAGLE CREEK (SHEET 1 OF 3)	07566	64452
42	LAYOUT OF BRIDGE HIGHWAY 23 OVER WAR WAGLE CREEK (SHEET 2 OF 3)	07566	64453
43	LAYOUT OF BRIDGE HIGHWAY 23 OVER WAR WAGLE CREEK (SHEET 3 OF 3)	07566	64454
44	DETAILS OF BENT 1 (SHEET 1 OF 4)	07566	64455
45	DETAILS OF BENT 1 (SHEET 2 OF 4)	07566	64456
46	DETAILS OF BENT 1 (SHEET 3 OF 4)	07566	64457
47	DETAILS OF BENT 1 (SHEET 4 OF 4)	07566	64458
48	DETAILS OF BENTS 2, 3, 4, & 5 (SHEET 1 OF 3)	07566	64459
49	DETAILS OF BENTS 2, 3, 4, & 5 (SHEET 2 OF 3)	07566	64460
50	DETAILS OF BENTS 2, 3, 4, & 5 (SHEET 3 OF 3)	07566	64461
51	DETAILS OF BENT 6 (SHEET 1 OF 4)	07566	64462
52	DETAILS OF BENT 6 (SHEET 2 OF 4)	07566	64463
53	DETAILS OF BENT 6 (SHEET 3 OF 4)	07566	64464
54	DETAILS OF BENT 6 (SHEET 4 OF 4)	07566	64465
55	DETAILS OF ELASTOMERIC BEARINGS	07566	64466
56	DETAILS OF 420'-0" CONTINUOUS W-BEAM UNIT (SHEET 1 OF 4)	07566	64467
57	DETAILS OF 420'-0" CONTINUOUS W-BEAM UNIT (SHEET 2 OF 4)	07566	64468
58	DETAILS OF 420'-0" CONTINUOUS W-BEAM UNIT (SHEET 3 OF 4)	07566	64469
59	DETAILS OF 420'-0" CONTINUOUS W-BEAM UNIT (SHEET 4 OF 4)	07566	64470
60	DETAILS OF DECORATIVE CONCRETE BRIDGE RAILING (SHEET 1 OF 4)	07566	64471
61	DETAILS OF DECORATIVE CONCRETE BRIDGE RAILING (SHEET 2 OF 4)	07566	64472
62	DETAILS OF DECORATIVE CONCRETE BRIDGE RAILING (SHEET 3 OF 4)	07566	64473
63	DETAILS OF DECORATIVE CONCRETE BRIDGE RAILING (SHEET 4 OF 4)	07566	64474
64	DETAILS OF TYPE 1 SPECIAL APPROACH GUTTERS	07566	64475
65 - 103	CROSS SECTIONS		

NOTE: CROSS SECTIONS NOT NORMALLY INCLUDED IN PLANS SOLD TO PROSPECTIVE BIDDERS, BUT MAY BE HAD UPON REQUEST.

mh39735 6/18/2021
R090523.DGN

DATE REVISED	DATE REVISED	FED.RD. DIST.NO.	STATE	JOB NO.	SHEET NO.	TOTAL SHEETS
		6	ARK.	090523	3	103
		STANDARD DRAWINGS & GENERAL NOTES				

STATE OF ARKANSAS
LICENSED PROFESSIONAL ENGINEER
No. 11425
TRINITY D. SMITH

11-21-2023

BRIDGE STANDARD DRAWINGS

DRWG.NO.	TITLE	DATE
55000____	STANDARD DETAILS FOR EMBANKMENT CONSTRUCTION AND BACKFILL AT BRIDGE ENDS	02-27-14
55001____	STANDARD DETAILS FOR DUMPED RIPRAP AND FILTER BLANKET AND COMPUTING EXCAVATION FOR STRUCTURES	02-27-14
55005____	STANDARD DETAILS FOR PERMANENT STEEL BRIDGE DECK FORMS FOR STEEL & CONCRETE GIRDER SPANS	03-24-16
55006____	STANDARD GENERAL NOTES FOR STEEL BRIDGE STRUCTURES	09-02-15
55007____	STANDARD DETAILS FOR STEEL BRIDGE STRUCTURES	02-11-16
55008____	STANDARD DETAILS FOR POURED SILICONE JOINTS	02-11-16
55010____	STANDARD DETAILS FOR TYPE D BRIDGE NAME PLATE	05-11-21
55020____	STANDARD DETAILS FOR STEEL H-PILES AND PILE ENCASEMENTS	03-24-16
55040C1__	STANDARD DETAILS FOR TYPE C1 APPROACH SLAB	02-27-14

ROADWAY STANDARD DRAWINGS

DRWG.NO.	TITLE	DATE
CDP-1____	CONCRETE DITCH PAVING	12-08-16
DR-2_____	DETAILS OF DRIVEWAYS & STREET TURNOUTS	05-19-22
FES-1____	FLARED END SECTION	10-18-96
FES-2____	FLARED END SECTION	10-18-96
FPC-9____	DETAILS OF DROP INLETS & JUNCTION BOXES	11-16-01
GR-6_____	GUARD RAIL DETAILS	05-19-22
GR-7_____	GUARD RAIL DETAILS	11-07-19
GR-8_____	GUARD RAIL DETAILS	11-07-19
GR-9_____	GUARD RAIL DETAILS	11-07-19
GR-10____	GUARD RAIL DETAILS	11-07-19
GR-11____	GUARD RAIL DETAILS	11-07-19
GR-12____	GUARD RAIL DETAILS	05-14-20
MB-1_____	MAILBOX DETAILS	11-18-04
PCC-1____	CONCRETE PIPE CULVERT FILL HEIGHTS & BEDDING	02-27-14
PCM-1____	METAL PIPE CULVERT FILL HEIGHTS & BEDDING	02-27-14
PM-1_____	PAVEMENT MARKING DETAILS	02-27-20
SE-2_____	TABLES AND METHOD OF SUPERELEVATION FOR TWO-WAY TRAFFIC	11-07-19
TC-1_____	STANDARD TRAFFIC CONTROLS FOR HIGHWAY CONSTRUCTION	11-07-19
TC-2_____	STANDARD TRAFFIC CONTROLS FOR HIGHWAY CONSTRUCTION	05-20-21
TC-3_____	STANDARD TRAFFIC CONTROLS FOR HIGHWAY CONSTRUCTION	08-12-21
TEC-1____	TEMPORARY EROSION CONTROL DEVICES	11-16-17
TEC-2____	TEMPORARY EROSION CONTROL DEVICES	06-02-94
TEC-3____	TEMPORARY EROSION CONTROL DEVICES	11-03-94
WF-2_____	WIRE FENCE WATER GAPS	04-20-79
WF-4_____	WIRE FENCE TYPE C AND D	08-22-02

GENERAL NOTES

1. GRADE LINE DENOTES FINISHED GRADE WHERE SHOWN ON PLANS.
2. ALL PIPE LINES, POWER, TELEPHONE, AND TELEGRAPH LINES TO BE MOVED OR LOWERED BY THE RESPECTIVE OWNERS AS PER AGREEMENT WITH SUCH OWNERS.
3. ANY EQUIPMENT OR APPURTENANCE THAT INTERFERES WITH THE PROPOSED CONSTRUCTION AND WHICH MAY BE THE PROPERTY OF UTILITY SERVICE ORGANIZATIONS SHALL BE MOVED BY THE OWNERS UNLESS OTHERWISE PROVIDED.
4. THE CONTRACTOR SHALL BE RESPONSIBLE FOR MAINTAINING U. S. MAILBOXES WITHIN THE PROJECT LIMITS IN SUCH A MANNER THAT THE PUBLIC MAY RECEIVE CONTINUED MAIL SERVICE. PAYMENT WILL BE CONSIDERED INCLUDED IN THE PRICE BID FOR THE VARIOUS BID ITEMS.
5. ALL LAND MONUMENTS LOCATED WITHIN THE CONSTRUCTION AREA SHALL BE PROTECTED IN ACCORDANCE WITH SECTION 107.12 OF THE STANDARD SPECIFICATIONS.
6. ALL TREES THAT DO NOT DIRECTLY INTERFERE WITH THE PROPOSED CONSTRUCTION SHALL BE SPARED AS DIRECTED BY THE ENGINEER. CARE AND DISCRETION SHALL BE USED TO ENSURE THAT ALL TREES NOT TO BE REMOVED SHALL BE HARMED AS LITTLE AS POSSIBLE DURING THE CONSTRUCTION OPERATIONS.
7. THE CONTRACTOR SHALL BE RESPONSIBLE FOR PROVIDING A FENCE TO CONTROL LIVESTOCK IN AREAS WHERE PASTURES ARE SEVERED. WIRE FENCE MAY BE CONSTRUCTED INITIALLY, OR IN LIEU THEREOF, THE CONTRACTOR AT HIS OWN EXPENSE, MAY ELECT TO PROVIDE TEMPORARY FENCING SUITABLE TO CONTAIN LIVESTOCK.
8. THE SEQUENCE AS SHOWN ON THE MAINTENANCE OF TRAFFIC PLANS IS A GENERAL OUTLINE FOR THE CONSTRUCTION OF THIS PROJECT, AND IN NO WAY IS IT INTENDED TO COVER EVERY ITEM IN THE PROJECT. ITEMS NOT CRITICAL TO THE CONSTRUCTION SEQUENCE MAY BE CONSTRUCTED IN ANY STAGE AS APPROVED BY THE RESIDENT ENGINEER.
9. ALL FLEXIBLE BASE AND ASPHALTIC PAVEMENTS REMOVED SHALL BE PAID FOR UNDER THE ITEM NO. 210 - UNCLASSIFIED EXCAVATION.
10. THE EXISTING ASPHALT PAVEMENT TO BE REMOVED FROM THE REMAINING PAVEMENT SHALL BE SEPARATED BY SAWING ALONG A NEAT LINE. AFTER SAWING, THE PAVEMENT TO BE REMOVED SHALL BE CAREFULLY REMOVED IN A MANNER THAT WILL NOT DAMAGE THE PAVEMENT THAT IS TO REMAIN. ANY DAMAGE OF THE ASPHALT PAVEMENT THAT IS TO REMAIN IN PLACE SHALL BE REPAIRED AT THE CONTRACTOR'S EXPENSE.

mh39735 6/18/2021
R090523.DGN

DATE REVISED	DATE REVISED	FED.RD. DIST.NO.	STATE	JOB NO.	SHEET NO.	TOTAL SHEETS
		6	ARK.	090523	4	103
		GOVERNING SPECIFICATIONS				

STATE OF ARKANSAS
LICENSED PROFESSIONAL ENGINEER
No. 11425
TRINITY D. SMITH

11-21-2023

GOVERNING SPECIFICATIONS

ARKANSAS STATE HIGHWAY COMMISSION STANDARD SPECIFICATIONS FOR HIGHWAY CONSTRUCTION, EDITION OF 2014, AND THE FOLLOWING SUPPLEMENTAL SPECIFICATIONS:

NUMBER	TITLE
ERRATA____	ERRATA FOR THE BOOK OF STANDARD SPECIFICATIONS
FHWA-1273__	REQUIRED CONTRACT PROVISIONS FEDERAL-AID CONSTRUCTION CONTRACTS
FHWA-1273__	SUPPLEMENT - EQUAL EMPLOYMENT OPPORTUNITY - NOTICE TO CONTRACTORS
FHWA-1273__	SUPPLEMENT - SPECIFIC EQUAL EMPLOYMENT OPPORTUNITY RESPONSIBILITIES (23 U.S.C. 140)
FHWA-1273__	SUPPLEMENT - EQUAL EMPLOYMENT OPPORTUNITY - GOALS AND TIMETABLES
FHWA-1273__	SUPPLEMENT - EQUAL EMPLOYMENT OPPORTUNITY - FEDERAL STANDARDS
FHWA-1273__	SUPPLEMENT - TRAINING PROGRAM - JOB 090523
FHWA-1273__	SUPPLEMENT - POSTERS AND NOTICES REQUIRED FOR FEDERAL-AID PROJECTS
FHWA-1273__	SUPPLEMENT - WAGE RATE DETERMINATION
100-3_____	CONTRACTOR'S LICENSE
100-4_____	DEPARTMENT NAME CHANGE
102-2_____	ISSUANCE OF PROPOSALS
103-2_____	CONTACT INFORMATION FOR MOTORIST DAMAGE CLAIMS
105-4_____	MAINTENANCE DURING CONSTRUCTION
107-2_____	RESTRAINING CONDITIONS
108-1_____	LIQUIDATED DAMAGES
108-2_____	WORK ALLOWED PRIOR TO ISSUANCE OF WORK ORDER
110-1_____	PROTECTION OF WATER QUALITY AND WETLANDS
210-1_____	UNCLASSIFIED EXCAVATION
303-1_____	AGGREGATE BASE COURSE
306-1_____	QUALITY CONTROL AND ACCEPTANCE
307-1_____	CEMENT
308-1_____	CEMENT
400-1_____	TACK COATS
400-4_____	DESIGN AND QUALITY CONTROL OF ASPHALT MIXTURES
400-5_____	PERCENT AIR VOIDS FOR ACHM MIX DESIGNS
400-6_____	LIQUID ANTI-STRIP ADDITIVE
400-7_____	TRACKLESS TACK
404-3_____	DESIGN OF ASPHALT MIXTURES
409-2_____	ASPHALT LABORATORY FACILITY
410-1_____	CONSTRUCTION REQUIREMENTS AND ACCEPTANCE OF ASPHALT CONCRETE PLANT MIX COURSES
410-2_____	DEVICES FOR MEASURING DENSITY FOR ROLLING PATTERNS
410-4_____	EVALUATION OF ACHM SUBLOT REPLACEMENT MATERIAL
416-1_____	RECYCLED ASPHALT PAVEMENT
501-2_____	CEMENT
505-1_____	PORTLAND CEMENT CONCRETE DRIVEWAY
600-2_____	INCIDENTAL CONSTRUCTION
603-1_____	LANE CLOSURE NOTIFICATION
604-1_____	RETROREFLECTIVE SHEETING FOR TRAFFIC CONTROL DEVICES IN CONSTRUCTION ZONES
604-3_____	TRAFFIC CONTROL DEVICES IN CONSTRUCTION ZONES (MASH)
605-1_____	CONCRETE DITCH PAVING
606-1_____	PIPE CULVERTS FOR SIDE DRAINS
617-1_____	GUARDRAIL TERMINAL (TYPE 2)
617-2_____	GUARDRAIL DELINEATORS
620-1_____	MULCH COVER
621-1_____	FILTER SOCKS
800-1_____	STRUCTURES
802-3_____	CONCRETE FOR STRUCTURES
802-4_____	CEMENT
804-2_____	REINFORCING STEEL FOR STRUCTURES
807-2_____	STEEL STRUCTURES
808-1_____	INSTALLATION OF ELASTOMERIC BEARINGS
808-2_____	ELASTOMERIC BEARINGS

GOVERNING SPECIFICATIONS (CONT.)

ARKANSAS STATE HIGHWAY COMMISSION STANDARD SPECIFICATIONS FOR HIGHWAY CONSTRUCTION, EDITION OF 2014, AND THE FOLLOWING SPECIAL PROVISIONS:

NUMBER	TITLE
JOB 090523__	ARCHITECTURAL FINISH
JOB 090523__	BIDDING REQUIREMENTS AND CONDITIONS
JOB 090523__	BROADBAND INTERNET SERVICE FOR ASPHALT CONCRETE PLANT
JOB 090523__	BROADBAND INTERNET SERVICE FOR FIELD OFFICE
JOB 090523__	BUY AMERICA - CONSTRUCTION MATERIALS
JOB 090523__	CARGO PREFERENCE ACT REQUIREMENTS
JOB 090523__	CAVE DISCOVERY
JOB 090523__	CLASS C FLY ASH IN PORTLAND CEMENT CONCRETE PAVEMENT AND CLASS S(AE) CONCRETE
JOB 090523__	COLD MILLING - COUNTY PROPERTY
JOB 090523__	CONCRETE BRIDGE DECK CURING AND SURFACE TREATMENT RESTRICTIONS
JOB 090523__	CONSTRUCTION IN SPECIAL FLOOD HAZARD AREAS
JOB 090523__	DESIGN AND QUALITY CONTROL OF ASPHALT MIXTURES
JOB 090523__	DESIGN OF ASPHALT MIXTURES - AGGREGATES
JOB 090523__	DETAILS FOR SAFETY OF STREAM TRAFFIC
JOB 090523__	DIRECT TENSION INDICATORS FOR HIGH STRENGTH BOLT ASSEMBLIES
JOB 090523__	DISADVANTAGED BUSINESS ENTERPRISE BIDDER'S RESPONSIBILITIES
JOB 090523__	DRILLED SHAFT FOUNDATIONS
JOB 090523__	ESTABLISHING CONTRACT TIME – WORKING DAY CONTRACT
JOB 090523__	EXTENSION FOR PIPE CULVERTS
JOB 090523__	FLEXIBLE BEGINNING OF WORK
JOB 090523__	GOALS FOR DISADVANTAGED BUSINESS ENTERPRISE PARTICIPATION
JOB 090523__	LIQUIDATED DAMAGES PROCEDURE FOR BID LETTINGS
JOB 090523__	LONGITUDINAL JOINT DENSITIES FOR ACHM SURFACE COURSES
JOB 090523__	MANDATORY ELECTRONIC CONTRACT
JOB 090523__	MANDATORY ELECTRONIC DOCUMENT SUBMITTAL
JOB 090523__	NESTING SITES OF MIGRATORY BIRDS
JOB 090523__	NONDESTRUCTIVE TESTING OF DRILLED SHAFTS
JOB 090523__	OFF-SITE RESTRAINING CONDITIONS FOR INDIANA AND NORTHERN LONG-EARED BATS
JOB 090523__	PARTNERING REQUIREMENTS
JOB 090523__	PLASTIC PIPE
JOB 090523__	PRICE ADJUSTMENT FOR ASPHALT BINDER
JOB 090523__	PRICE ADJUSTMENT FOR FUEL
JOB 090523__	PROHIBITION OF CERTAIN TELECOMMUNICATIONS AND VIDEO SURVEILLANCE SERVICES OR EQUIPMENT
JOB 090523__	REMOVING AND REPLACING TOPSOIL
JOB 090523__	RUMBLE STRIPS
JOB 090523__	SECTION 404 NATIONWIDE 23 PERMIT REQUIREMENTS
JOB 090523__	SHORING FOR CULVERTS
JOB 090523__	SOIL STABILIZATION
JOB 090523__	STAINING CONCRETE SURFACES
JOB 090523__	STORM WATER POLLUTION PREVENTION PLAN
JOB 090523__	SUBMISSION OF ASPHALT CONCRETE HOT MIX ACCEPTANCE TEST RESULTS
JOB 090523__	TOTAL SOLAR ECLIPSE
JOB 090523__	UTILITY ADJUSTMENTS
JOB 090523__	VALUE ENGINEERING
JOB 090523__	WARM MIX ASPHALT
JOB 090523__	WATER POLLUTION CONTROL

mh39735 6/18/2021
R090523.DGN

DATE REVISED	DATE REVISED	FED.RD. DIST.NO.	STATE	JOB NO.	SHEET NO.	TOTAL SHEETS
		6	ARK.	090523	5	103
		TYPICAL SECTIONS OF IMPROVEMENT				

STATE OF ARKANSAS
LICENSED PROFESSIONAL ENGINEER
No. 11425
TRINITY D. SMITH

11-21-2023

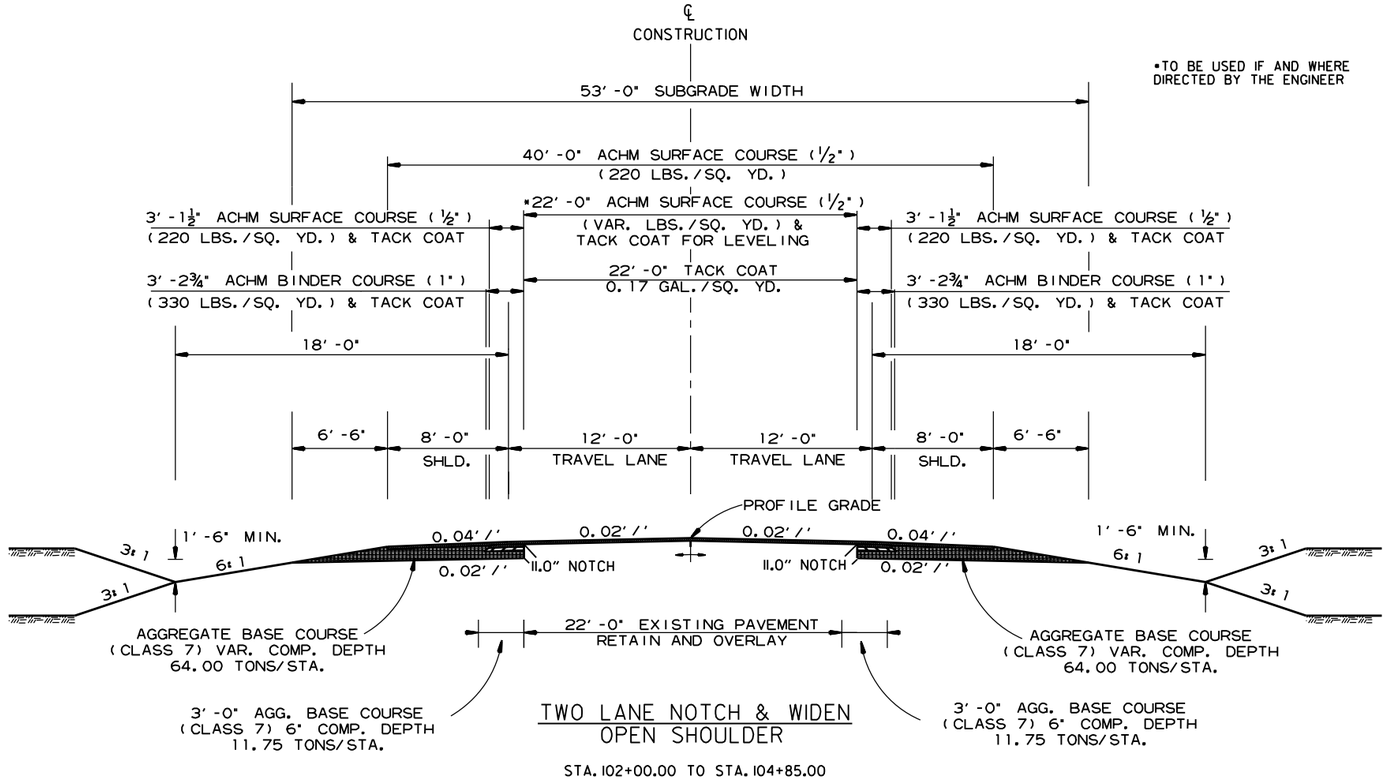

TWO LANE NOTCH & WIDEN OPEN SHOULDER

STA. 102+00.00 TO STA. 104+85.00

NOTES:

1. REFER TO CROSS SECTIONS FOR DEVIATION FROM THE NORMAL SLOPES. NO CHANGES SHALL BE MADE FROM THE PLANNED SLOPES WITHOUT THE APPROVAL OF THE ENGINEER.
2. THE THICKNESS OF AGGREGATE BASE COURSE SHALL BE WITHIN PLUS OR MINUS ONE INCH OF THE PLAN THICKNESS SHOWN. THE CONTRACTOR WILL CORRECT ANY DEFICIENT THICKNESS THAT DOES NOT MEET TOLERANCE INDICATED. PAYMENT WILL NOT BE MADE FOR MATERIAL PLACED IN EXCESS OF THE TOLERANCE INDICATED.
3. ASPHALT FOR LEVELING OF EXISTING PAVEMENT SHALL BE PLACED ONLY IF AND WHERE DIRECTED BY THE ENGINEER. CALCULATIONS FOR THE AMOUNT OF LEVELING AND/OR LEVELING OPERATIONS SHALL BE PERFORMED BEFORE CONSTRUCTING NOTCH AND WIDENING. CALCULATIONS WILL NOT BE PAID FOR DIRECTLY, BUT PAYMENT WILL BE CONSIDERED INCLUDED IN THE VARIOUS PAY ITEMS.
4. WITH THE APPROVAL OF THE ENGINEER, THE CONTRACTOR WILL BE ALLOWED TO SUBSTITUTE, AT NO ADDITIONAL COST TO THE DEPARTMENT, THE FIRST LIFT OF ACHM SURFACE COURSE (1/2") IN LIEU OF AGGREGATE BASE COURSE ON THE SHOULDERS.
5. THE FINAL 2" OF SURFACE COURSE IS TO BE PLACED AFTER ALL OTHER COURSES HAVE BEEN LAID. LONGITUDINAL JOINTS SHALL BE AT LANE LINES.

mh39735 6/18/2021
R090523.DGN

TYPICAL SECTIONS OF IMPROVEMENT

DATE REVISED	DATE REVISED	FED.RD. DIST.NO.	STATE	JOB NO.	SHEET NO.	TOTAL SHEETS
		6	ARK.	090523	6	103
		TYPICAL SECTIONS OF IMPROVEMENT				

STATE OF ARKANSAS
LICENSED PROFESSIONAL ENGINEER
No. 11425
TRINITY D. SMITH

11-21-2023

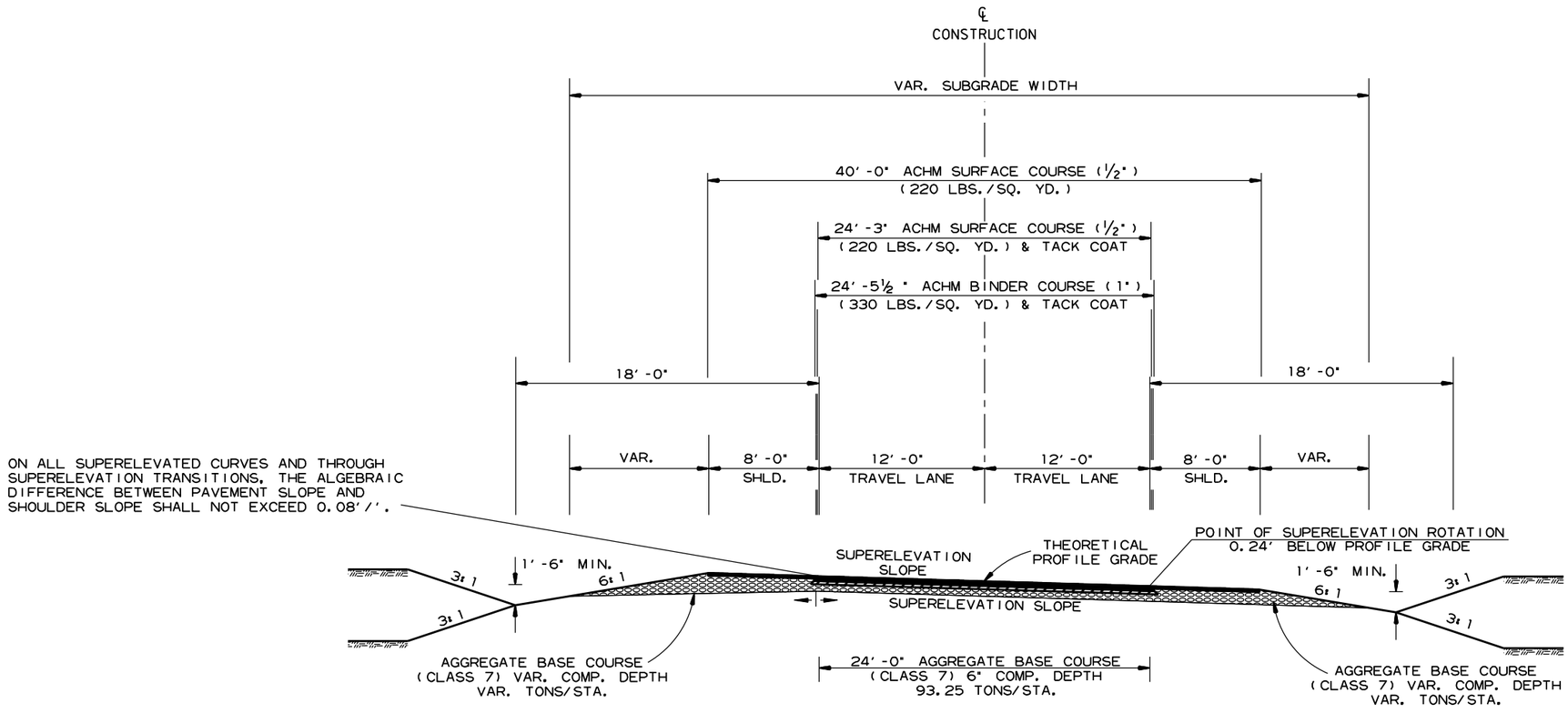

TWO LANE FULL DEPTH OPEN SHOULDER

STA. 104+85.00 TO 107+27.40
STA. 112+22.60 TO STA. 115+76.10

NOTES:

1. REFER TO CROSS SECTIONS FOR DEVIATION FROM THE NORMAL SLOPES. NO CHANGES SHALL BE MADE FROM THE PLANNED SLOPES WITHOUT THE APPROVAL OF THE ENGINEER.
2. THE THICKNESS OF AGGREGATE BASE COURSE SHALL BE WITHIN PLUS OR MINUS ONE INCH OF THE PLAN THICKNESS SHOWN. THE CONTRACTOR WILL CORRECT ANY DEFICIENT THICKNESS THAT DOES NOT MEET TOLERANCE INDICATED. PAYMENT WILL NOT BE MADE FOR MATERIAL PLACED IN EXCESS OF THE TOLERANCE INDICATED.
3. WITH THE APPROVAL OF THE ENGINEER, THE CONTRACTOR WILL BE ALLOWED TO SUBSTITUTE, AT NO ADDITIONAL COST TO THE DEPARTMENT, THE FIRST LIFT OF ACHM SURFACE COURSE (1/2") IN LIEU OF AGGREGATE BASE COURSE ON THE SHOULDERS.
4. THE FINAL 2" OF SURFACE COURSE IS TO BE PLACED AFTER ALL OTHER COURSES HAVE BEEN LAID. LONGITUDINAL JOINTS SHALL BE AT LANE LINES.

mh39735 6/18/2021
R090523.DGN

TYPICAL SECTIONS OF IMPROVEMENT

DATE REVISED	DATE REVISED	FED.RD. DIST.NO.	STATE	JOB NO.	SHEET NO.	TOTAL SHEETS
		6	ARK.	090523	7	103
		TYPICAL SECTIONS OF IMPROVEMENT				

STATE OF ARKANSAS
LICENSED PROFESSIONAL ENGINEER
No. 11425
TRINITY D. SMITH

11-21-2023

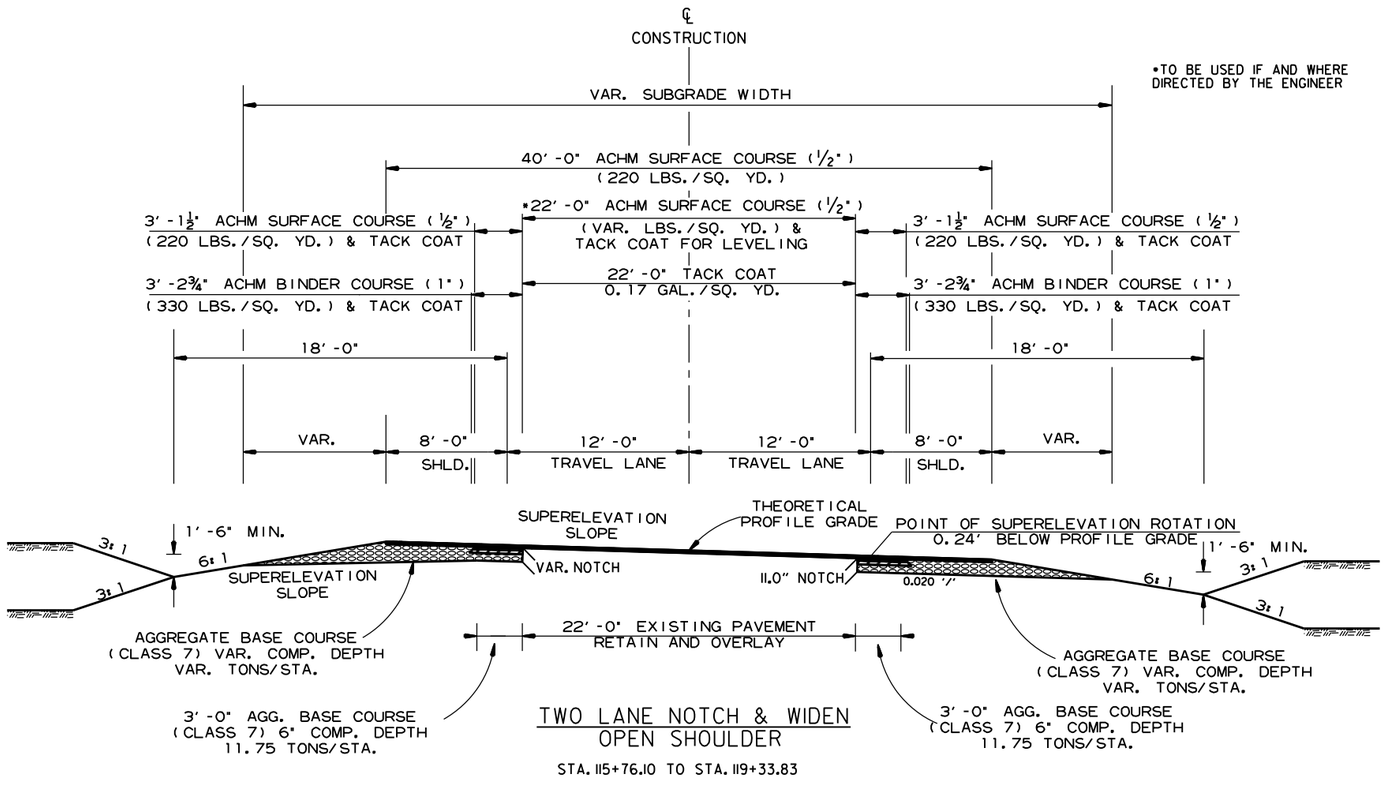

TWO LANE NOTCH & WIDEN
OPEN SHOULDER

STA. 115+76.10 TO STA. 119+33.83

*TO BE USED IF AND WHERE DIRECTED BY THE ENGINEER

NOTES:

1. REFER TO CROSS SECTIONS FOR DEVIATION FROM THE NORMAL SLOPES. NO CHANGES SHALL BE MADE FROM THE PLANNED SLOPES WITHOUT THE APPROVAL OF THE ENGINEER.
2. THE THICKNESS OF AGGREGATE BASE COURSE SHALL BE WITHIN PLUS OR MINUS ONE INCH OF THE PLAN THICKNESS SHOWN. THE CONTRACTOR WILL CORRECT ANY DEFICIENT THICKNESS THAT DOES NOT MEET TOLERANCE INDICATED. PAYMENT WILL NOT BE MADE FOR MATERIAL PLACED IN EXCESS OF THE TOLERANCE INDICATED.
3. ASPHALT FOR LEVELING OF EXISTING PAVEMENT SHALL BE PLACED ONLY IF AND WHERE DIRECTED BY THE ENGINEER. CALCULATIONS FOR THE AMOUNT OF LEVELING AND/OR LEVELING OPERATIONS SHALL BE PERFORMED BEFORE CONSTRUCTING NOTCH AND WIDENING. CALCULATIONS WILL NOT BE PAID FOR DIRECTLY, BUT PAYMENT WILL BE CONSIDERED INCLUDED IN THE VARIOUS PAY ITEMS.
4. WITH THE APPROVAL OF THE ENGINEER, THE CONTRACTOR WILL BE ALLOWED TO SUBSTITUTE, AT NO ADDITIONAL COST TO THE DEPARTMENT, THE FIRST LIFT OF ACHM SURFACE COURSE (1/2") IN LIEU OF AGGREGATE BASE COURSE ON THE SHOULDERS.
5. THE FINAL 2" OF SURFACE COURSE IS TO BE PLACED AFTER ALL OTHER COURSES HAVE BEEN LAID. LONGITUDINAL JOINTS SHALL BE AT LANE LINES.

mh39735 6/18/2021
R090523.DGN

TYPICAL SECTIONS OF IMPROVEMENT

DATE REVISED	DATE REVISED	FED.RD. DIST.NO.	STATE	JOB NO.	SHEET NO.	TOTAL SHEETS
		6	ARK.	090523	8	103
		TYPICAL SECTIONS OF IMPROVEMENT				

STATE OF ARKANSAS
LICENSED PROFESSIONAL ENGINEER
No. 11425
TRINITY D. SMITH

11-21-2023

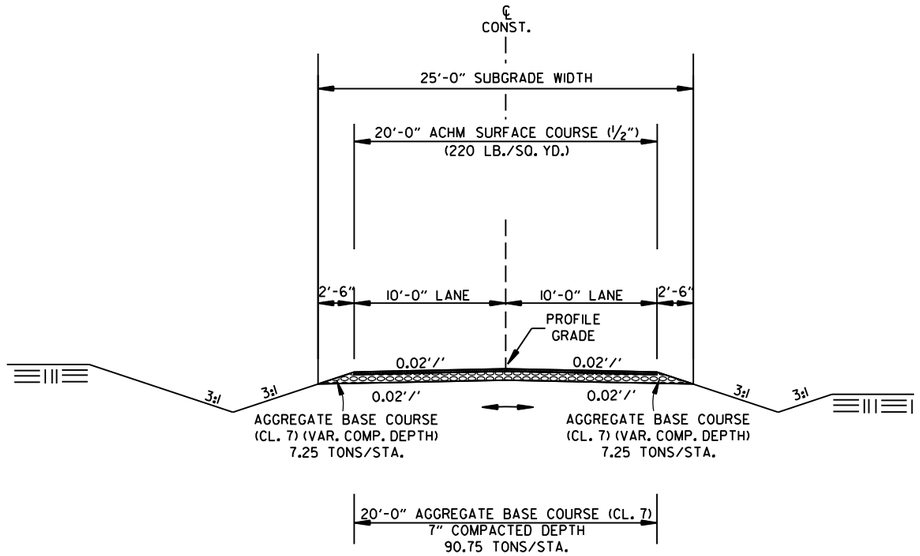

COUNTY ROAD AND PARKING DRIVE

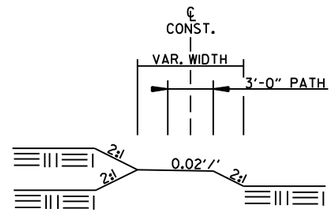

TRAIL CONNECTOR

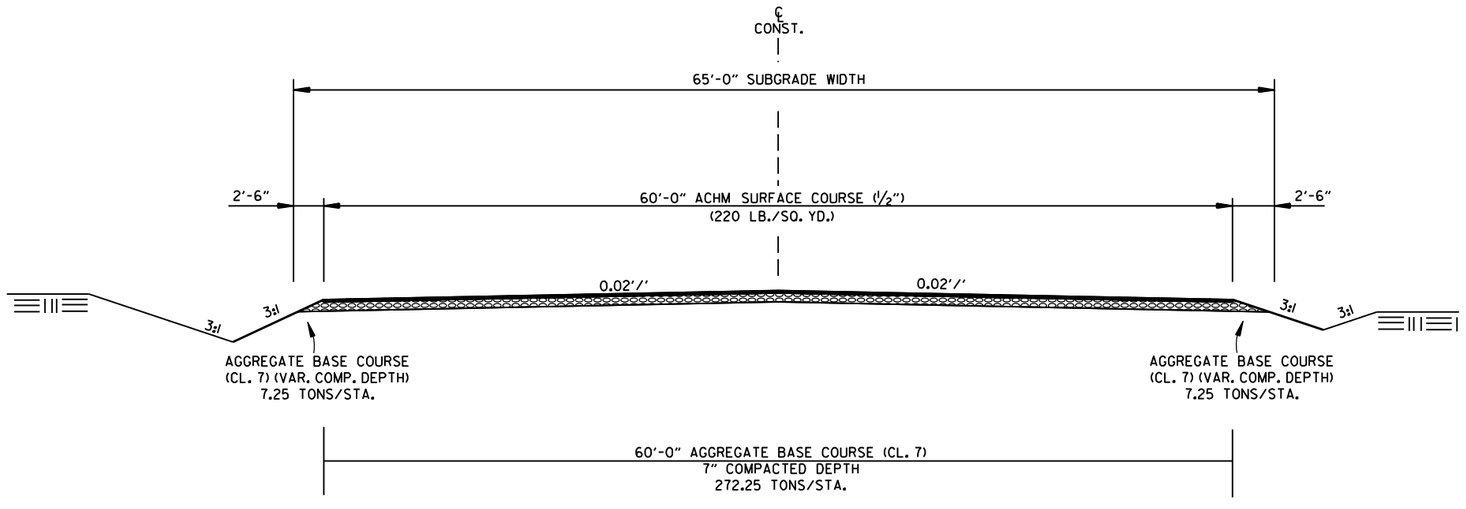

PARKING LOT

mh39735 6/18/2021
R090523.DGN

TYPICAL SECTIONS OF IMPROVEMENT

DATE REVISED	DATE REVISED	FED.RD. DIST.NO.	STATE	JOB NO.	SHEET NO.	TOTAL SHEETS
		6	ARK.	090523	9	103
		SPECIAL DETAILS				

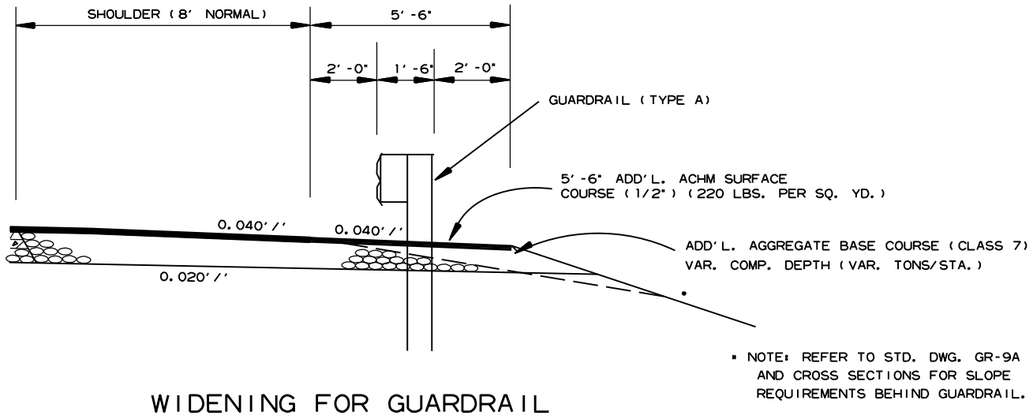

WIDENING FOR GUARDRAIL

▪ NOTE: REFER TO STD. DWG. GR-9A AND CROSS SECTIONS FOR SLOPE REQUIREMENTS BEHIND GUARDRAIL.

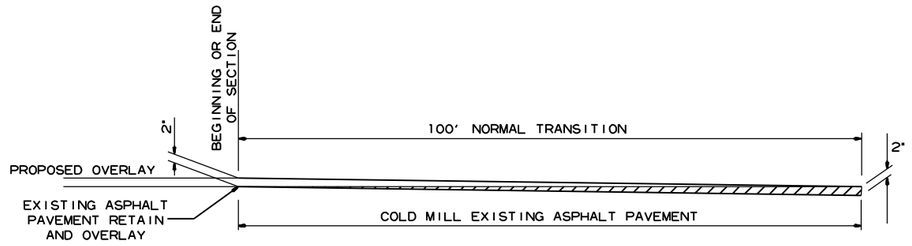

DETAIL FOR TRANSITIONS

STATE OF ARKANSAS
LICENSED PROFESSIONAL ENGINEER
No. 11425
TRINITY D. SMITH

11-21-2023

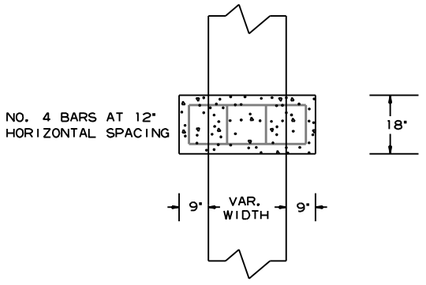

TOP VIEW

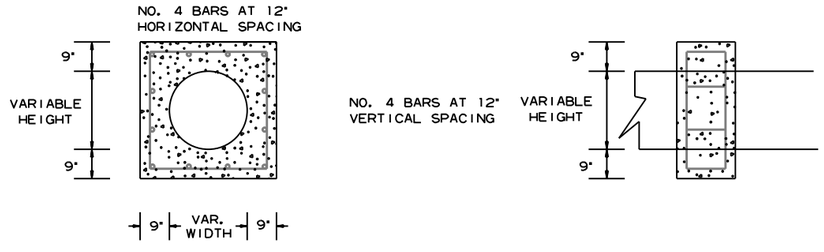

FRONT VIEW

SIDE VIEW

PIPE EXTENSION
REINFORCED CONCRETE COLLAR DETAIL

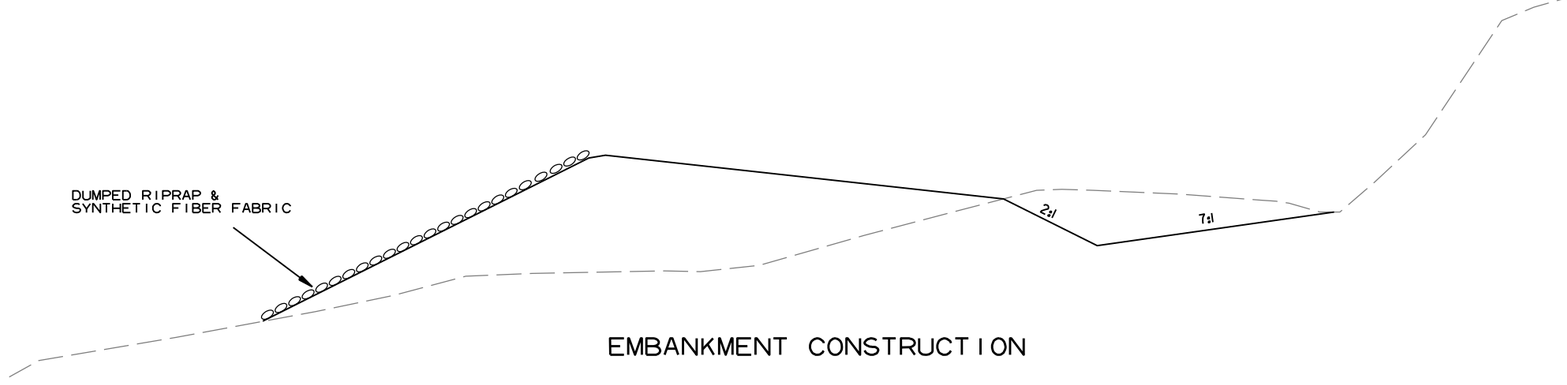

EMBANKMENT CONSTRUCTION

mh39735 8/18/2021
R090523.DGN

DATE REVISED	DATE REVISED	FED.RD. DIST.NO.	STATE	JOB NO.	SHEET NO.	TOTAL SHEETS
		6	ARK.	090523	10	103
		SPECIAL DETAILS				

STATE OF ARKANSAS
LICENSED PROFESSIONAL ENGINEER
No. 11425
TRINITY D. SMITH

11-21-2023

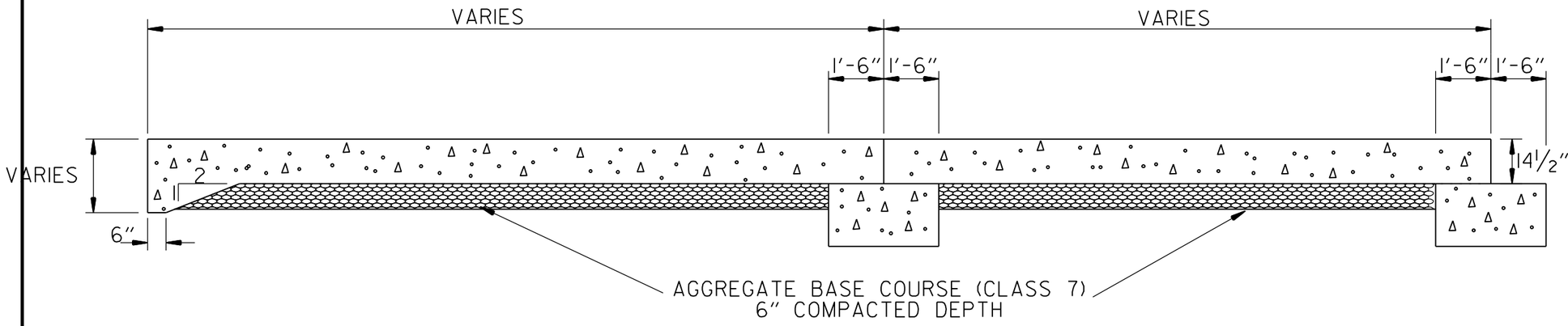

SPECIAL DETAIL OF APPROACH SLAB

NOTES:

(1) THIS DETAIL TO BE USED ONLY WHERE DIRECTED BY THE ENGINEER.

(2) QUANTITIES FOR METHOD OF GRADE RAISE USING ASPHALT WERE CALCULATED ON THIS PROJECT AT LOCATIONS WHERE THE DISTANCE BETWEEN THE EXISTING ASPHALT ROADWAY AND THE PROPOSED SUBGRADE WAS ONE FOOT OR LESS.

(3) IN LOCATIONS WHERE THE DISTANCE BETWEEN THE PROPOSED SUBGRADE AND THE EXISTING ASPHALT ROADWAY IS MORE THAN ONE FOOT, SCARIFICATION OF THE EXISTING ASPHALT ROADWAY WILL BE REQUIRED AS STATED IN SECTION 210, SUBSECTION 210.09, OF THE STANDARD SPECIFICATIONS.

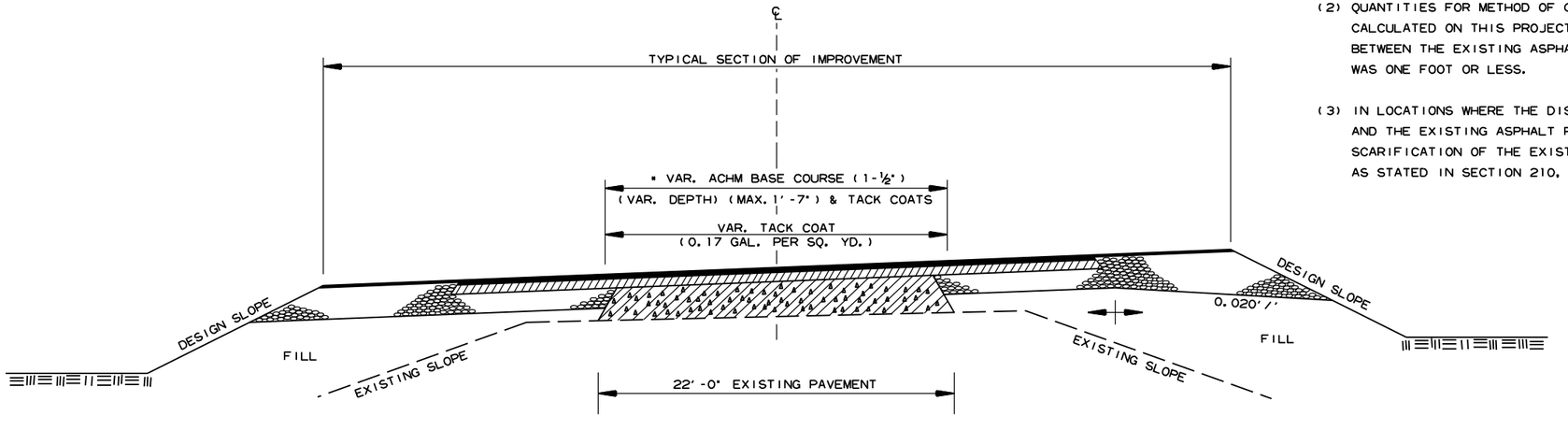

* 6" AGGREGATE BASE COURSE (CLASS 7)
TO BE REPLACED WITH ACHM BASE COURSE (1-½")

METHOD OF RAISING GRADE

mh39735 8/18/2021
R090523.DGN

SPECIAL DETAILS

DATE REVISED	DATE REVISED	FED.RD. DIST.NO.	STATE	JOB NO.	SHEET NO.	TOTAL SHEETS
		6	ARK.	090523	11	103
		SPECIAL DETAILS				

STATE OF ARKANSAS
LICENSED PROFESSIONAL ENGINEER
No. 11425
TRINITY D. SMITH

11-21-2023

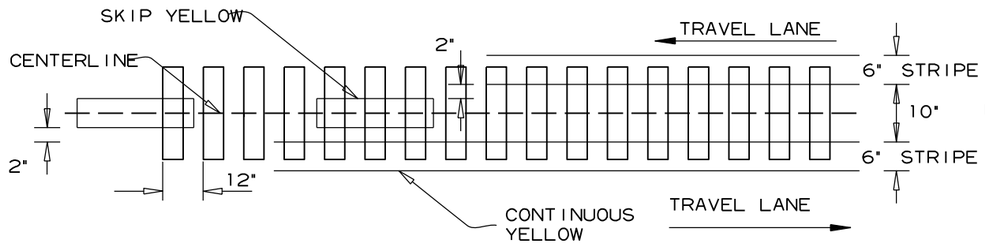

ASPHALT PAVEMENT

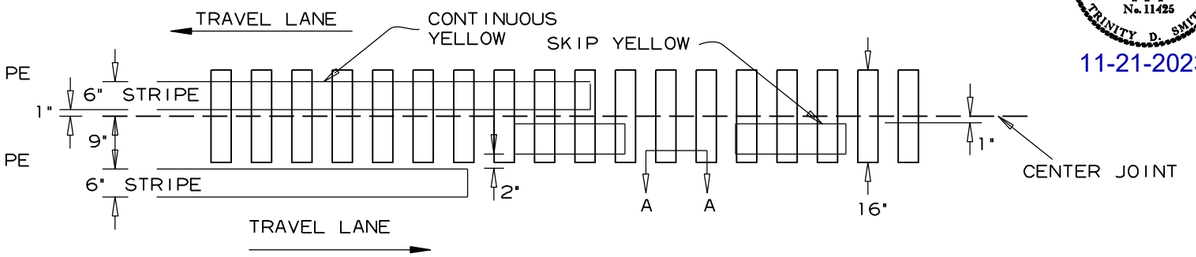

CONCRETE PAVEMENT

LOCATION PLAN OF CENTERLINE RUMBLE STRIPES

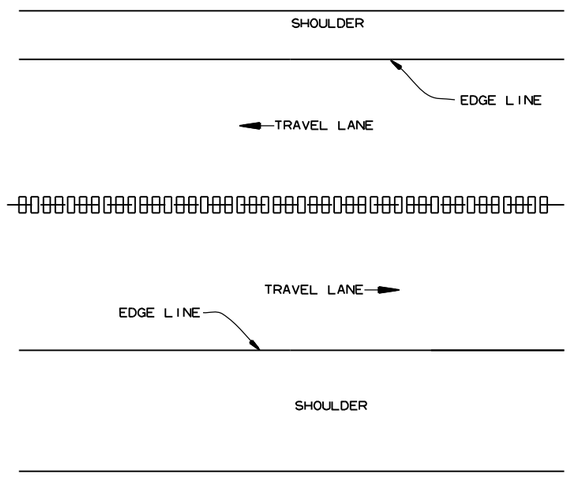

PLAN VIEW

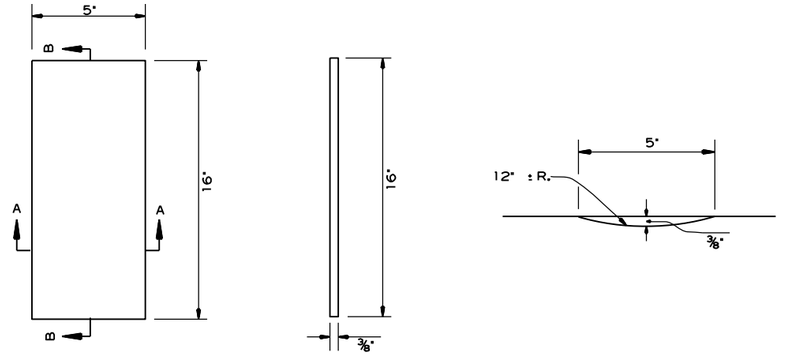

PLAN SECTION B-B SECTION A-A

DETAILS OF CENTERLINE RUMBLE STRIPES

GENERAL NOTES

1. RUMBLE STRIPES SHALL NOT BE INSTALLED ON BRIDGE DECKS, APPROACH SLABS, INTERSECTING STREETS OR ROADWAYS, OR ACROSS TRANSVERSE JOINTS OF CONCRETE SHOULDERS.
2. RUMBLE STRIPES SHALL BE MEASURED BY THE LINEAR FOOT LONGITUDINALLY ALONG THE CENTERLINE.
3. THE 3/8" DEPTH SHALL GENERALLY APPLY FOR THE ENTIRE 16" LENGTH. SOME VARIATION TO SUIT SLOPE BREAKS MAY BE NECESSARY.

mh39735 8/18/2021
R090523.DGN

DATE REVISED	DATE REVISED	FED.RD. DIST.NO.	STATE	JOB NO.	SHEET NO.	TOTAL SHEETS
		6	ARK.	090523	12	103
		SPECIAL DETAILS				

STATE OF ARKANSAS
LICENSED PROFESSIONAL ENGINEER
No. 11425
TRINITY D. SMITH

11-21-2023

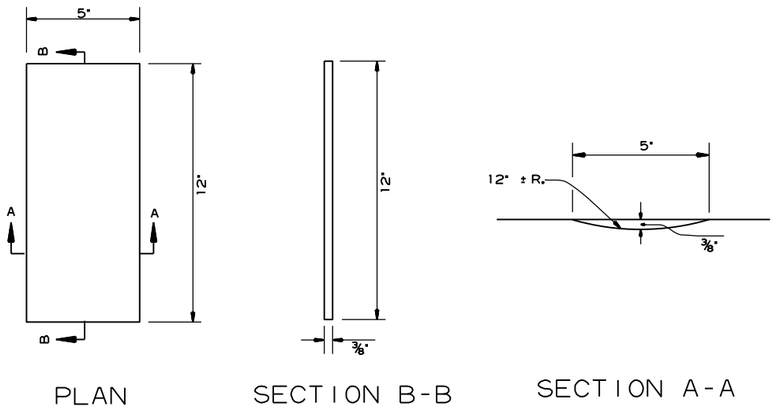

DETAILS OF RUMBLE STRIPS

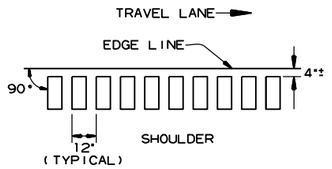

LOCATION PLAN OF RUMBLE STRIPS
LEFT OR RIGHT SHOULDER

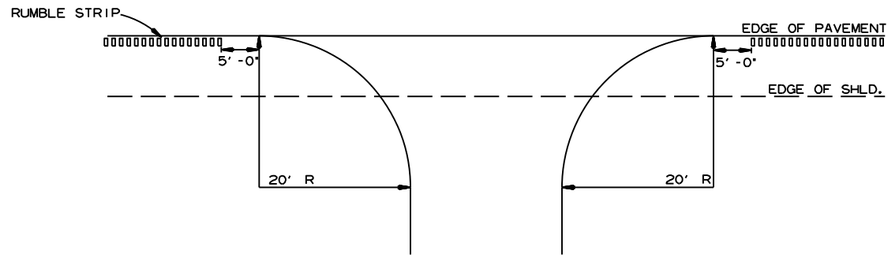

DETAIL FOR RUMBLE STRIP GAP
AT DRIVEWAY TURNOUTS

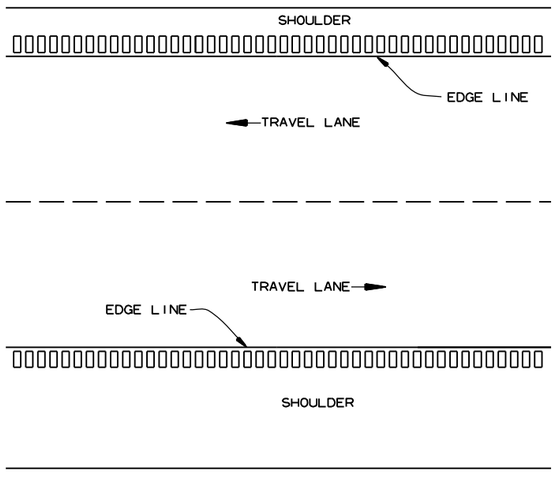

PLAN VIEW

GENERAL NOTES

1. RUMBLE STRIPS SHALL NOT BE INSTALLED ON CURB SECTIONS, BRIDGE DECKS, APPROACH SLABS, INTERSECTING STREETS OR ROADWAYS, RESIDENTIAL OR COMMERCIAL DRIVEWAYS OR ACROSS TRANSVERSE JOINTS OF CONCRETE SHOULDERS.
2. RUMBLE STRIPS SHALL NOT BE INSTALLED ON A PAVED SHOULDER THAT IS USED AS A DECELERATION LANE FOR THE LENGTH DEEMED APPROPRIATE BY THE ENGINEER.
3. THE 4" OFFSET FROM THE EDGE LINE MAY BE INCREASED TO AVOID LONGITUDINAL JOINTS. IN ALL CASES, THE LATERAL DEVIATION FROM THE PLANNED OFFSET SHOULD BE KEPT TO A MINIMUM.
4. RUMBLE STRIPS SHALL BE MEASURED BY THE LINEAR FOOT LONGITUDINALLY ALONG THE SHOULDER. PAYMENT SHALL ONLY INCLUDE THAT PORTION OF THE SHOULDER ON WHICH RUMBLE STRIPS HAVE BEEN CONSTRUCTED. NO MEASUREMENT OR PAYMENT WILL BE MADE FOR GAPS, DRIVEWAYS, TURNOUTS, OR OTHER PUBLIC ROAD INTERSECTIONS WHERE RUMBLE STRIPS HAVE NOT BEEN CONSTRUCTED.
5. THE 3/8" DEPTH SHALL GENERALLY APPLY FOR THE ENTIRE 12" LENGTH. SOME VARIATION TO SUIT SHOULDER SLOPE BREAKS MAY BE NECESSARY.

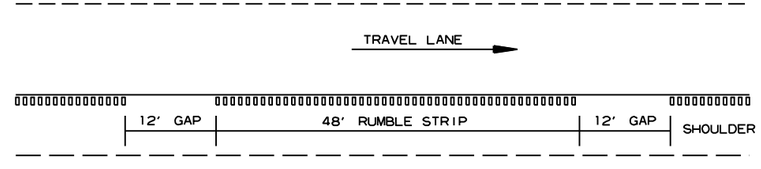

NOTE: GAP PATTERN SHALL BE ADJUSTED BY THE ENGINEER IN THE FIELD ALLOWING FOR DRIVEWAYS TO SERVE AS THE GAP.

DETAIL FOR GAP PATTERN RUMBLE STRIP

mh39735 8/18/2021
R090523.DGN

SPECIAL DETAILS

DATE REVISED	DATE REVISED	FED.RD. DIST.NO.	STATE	JOB NO.	SHEET NO.	TOTAL SHEETS
01/03/24		6	ARK.	090523	13	103

TEMPORARY EROSION CONTROL DETAILS

STATE OF ARKANSAS
LICENSED PROFESSIONAL ENGINEER
No. 11425
TRINITY D. SMITH

STA. 102+00.00
BEGIN JOB 090523
LOG MILE 3.91

STA. 119+33.83
END JOB 090523

LEGEND

- E-5 SAND BAG DITCH CHECKS
- E-6 ROCK DITCH CHECKS
- E-11 SILT FENCE

NOTE: PERIMETER CONTROLS SHALL BE PLACED AS CLEARING AND GRUBBING OPERATIONS ARE STARTED. MAINTAIN ALL EROSION CONTROL DEVICES UNTIL THE END OF THE JOB, UNLESS OTHERWISE SPECIFIED.

REVISIONS

DATE OF REVISION	REVISION

CLEARING AND GRUBBING
TEMPORARY EROSION CONTROL DETAILS

mh39735 4/10/2023
R090523.DGN

DATE REVISED	DATE REVISED	FED.RD. DIST.NO.	STATE	JOB NO.	SHEET NO.	TOTAL SHEETS
		6	ARK.	090523	14	103

TEMPORARY EROSION CONTROL DETAILS

LEGEND

- E-5 SAND BAG DITCH CHECKS
- E-6 ROCK DITCH CHECKS
- E-11 SILT FENCE

NOTE: PERIMETER CONTROLS SHALL BE PLACED AS CLEARING AND GRUBBING OPERATIONS ARE STARTED. MAINTAIN ALL EROSION CONTROL DEVICES UNTIL THE END OF THE JOB, UNLESS OTHERWISE SPECIFIED.

STATE OF ARKANSAS
LICENSED PROFESSIONAL ENGINEER
No. 11425
TRINITY D. SMITH

11-21-2023

REVISIONS

DATE OF REVISION	REVISION

CLEARING AND GRUBBING
TEMPORARY EROSION CONTROL DETAILS

mh39735 4/10/2023
R090523.DGN

DATE REVISED	DATE REVISED	FED.RD. DIST.NO.	STATE	JOB NO.	SHEET NO.	TOTAL SHEETS
01/03/24		6	ARK.	090523	[redacted]	103

TEMPORARY EROSION CONTROL DETAILS

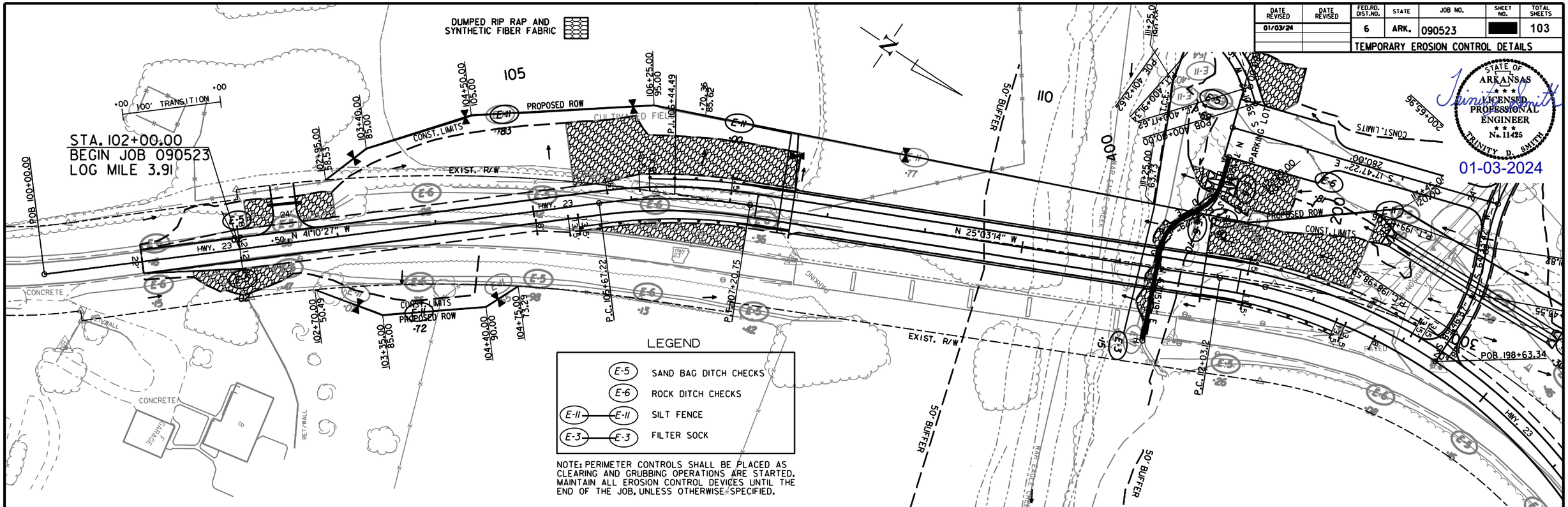

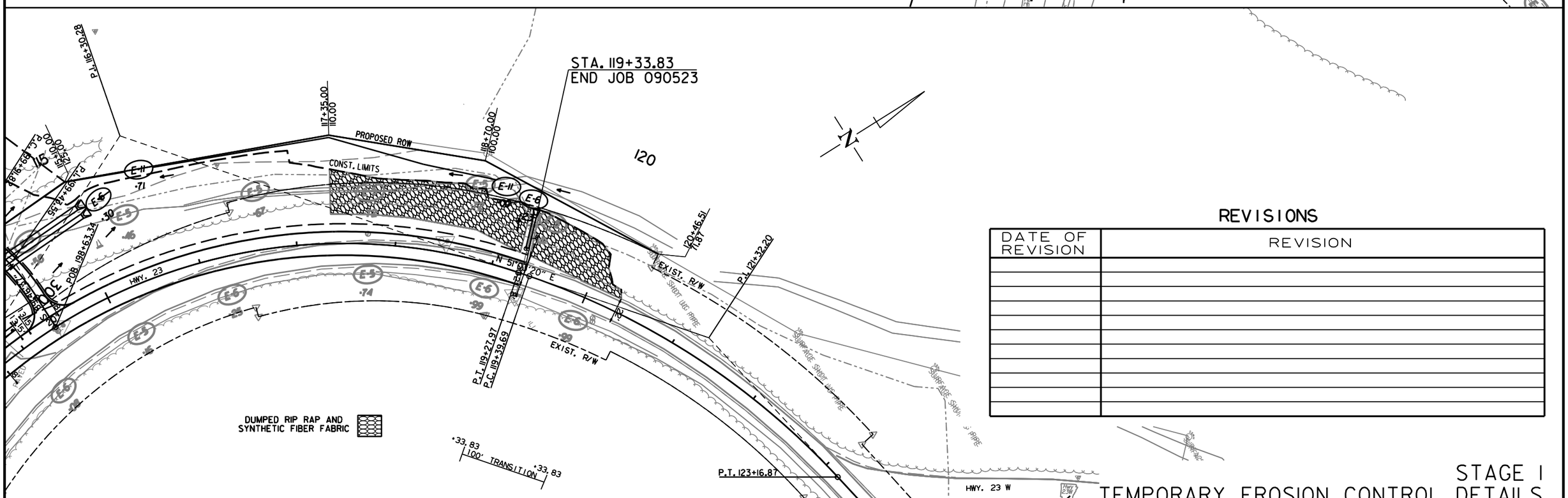

REVISIONS

DATE OF REVISION	REVISION

STAGE I
TEMPORARY EROSION CONTROL DETAILS

mh39735 4/10/2023
R090523.DGN

DATE REVISED	DATE REVISED	FED.RD. DIST.NO.	STATE	JOB NO.	SHEET NO.	TOTAL SHEETS
		6	ARK.	090523	16	103

TEMPORARY EROSION CONTROL DETAILS

LEGEND

E-5	SAND BAG DITCH CHECKS
E-6	ROCK DITCH CHECKS
E-11 — E-11	SILT FENCE
E-3 — E-3	FILTER SOCK

NOTE: PERIMETER CONTROLS SHALL BE PLACED AS CLEARING AND GRUBBING OPERATIONS ARE STARTED. MAINTAIN ALL EROSION CONTROL DEVICES UNTIL THE END OF THE JOB, UNLESS OTHERWISE SPECIFIED.

STATE OF ARKANSAS
LICENSED PROFESSIONAL ENGINEER
No. 11425
TRINITY D. SMITH

11-21-2023

DUMPED RIP RAP AND SYNTHETIC FIBER FABRIC

REVISIONS

DATE OF REVISION	REVISION

mh39735 4/10/2023
R090523.DGN

STAGE I
TEMPORARY EROSION CONTROL DETAILS

DATE REVISED	DATE REVISED	FED.RD. DIST.NO.	STATE	JOB NO.	SHEET NO.	TOTAL SHEETS
01/03/24		6	ARK.	090523	17	103
		TEMPORARY EROSION CONTROL DETAILS				

STATE OF ARKANSAS
LICENSED PROFESSIONAL ENGINEER
No. 11425
TRINITY D. SMITH
01-03-2024

DUMPED RIP RAP AND SYNTHETIC FIBER FABRIC

STA. 102+00.00
BEGIN JOB 090523
LOG MILE 3.91

LEGEND

E-5	SAND BAG DITCH CHECKS
E-6	ROCK DITCH CHECKS
E-11 — E-11	SILT FENCE
E-3 — E-3	FILTER SOCK

NOTE: PERIMETER CONTROLS SHALL BE PLACED AS CLEARING AND GRUBBING OPERATIONS ARE STARTED. MAINTAIN ALL EROSION CONTROL DEVICES UNTIL THE END OF THE JOB, UNLESS OTHERWISE SPECIFIED.

STA. 119+33.83
END JOB 090523

DUMPED RIP RAP AND SYNTHETIC FIBER FABRIC

REVISIONS

DATE OF REVISION	REVISION

STAGE 2
TEMPORARY EROSION CONTROL DETAILS

mh39735 4/10/2023
R090523.DGN

DATE REVISED	DATE REVISED	FED.RD. DIST.NO.	STATE	JOB NO.	SHEET NO.	TOTAL SHEETS
		6	ARK.	090523	18	103
		MAINTENANCE OF TRAFFIC DETAILS				

STATE OF ARKANSAS
LICENSED PROFESSIONAL ENGINEER
No. 11425
TRINITY D. SMITH

11-21-2023

ADVANCE WARNING (ALL STAGES)

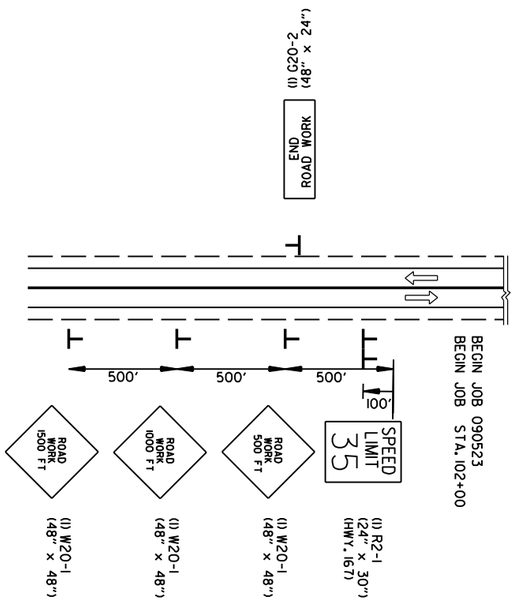

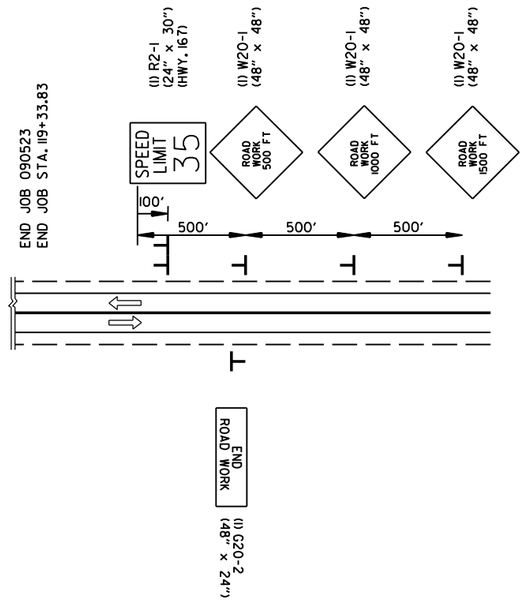

SHOULDER CLOSED — (2) W21-5a (36" X 36") — ALL STAGES TO BE USED IF AND WHERE DIRECTED BY THE ENGINEER

DO NOT PASS — (2) R4-1 (24" X 30") — ALL STAGES TO BE USED IF AND WHERE DIRECTED BY THE ENGINEER

BUMP — (2) W8-1 (30" X 30") — ALL STAGES TO BE USED IF AND WHERE DIRECTED BY THE ENGINEER

STAGE I QUANTITIES

SIGNS = 246.5 SQ. FT.
TRAFFIC DRUMS = 15 EACH
VERTICAL PANELS = 20 EACH
TYPE III BARRICADE-RT. = 32 LIN. FT.
TYPE III BARRICADE-LT. = 32 LIN. FT.

STAGE 2 QUANTITIES

SIGNS = 246.5 SQ. FT.
TRAFFIC DRUMS = 15 EACH
VERTICAL PANELS = 20 EACH
TYPE III BARRICADE-RT. = 32 LIN. FT.
TYPE III BARRICADE-LT. = 32 LIN. FT.

STAGE I SEQUENCE OF CONSTRUCTION

INSTALL ADVANCE WARNING SIGNS AND DEVICES AS SHOWN IN THE MAINTENANCE OF TRAFFIC DETAILS IN ALL LOCATIONS THROUGHTOUT THE PROJECT AREA.

USE VERTICAL PANELS SPACED 45' ON CENTER TO DELINEATE THE WORK ZONE.

CONSTRUCT STRUCTURES AND EMBANKMENT LT. FROM STA. 101+00 TO STA. 120+33.83 AS SHOWN IN STAGE I OF THE MAINTENANCE OF TRAFFIC DETAILS.

STAGE 2 SEQUENCE OF CONSTRUCTION

MAINTAIN ADVANCE WARNING SIGNS AND DEVICES AS SHOWN ON THE MAINTENANCE OF TRAFFIC DETAILS.

USE VERTICAL PANELS SPACED 45' ON CENTER TO DELINEATE THE WORK ZONE.

SHIFT TRAFFIC ONTO THE NEW ROADWAY AS SHOWN IN THE STAGE 2 MAINTENANCE OF TRAFFIC DETAILS.

CONSTRUCT STRUCTURES AND EMBANKMENT RT. FROM STA. 101+00 TO STA. 120+33.83 AS SHOWN IN STAGE 2 OF THE MAINTENANCE OF TRAFFIC DETAILS.

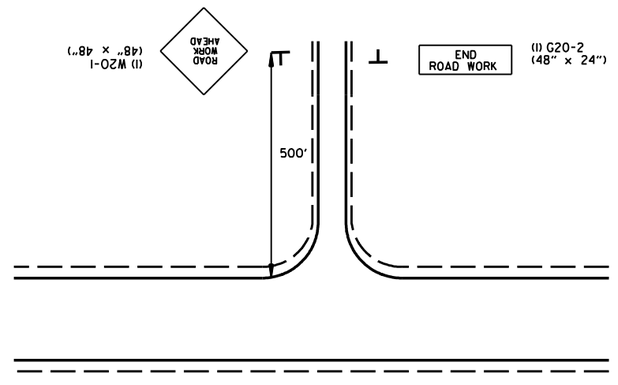

ADVANCE WARNING SIGNS

CO. RD. 8530

mh39735 6/18/2021
R090523.DGN

ADVANCE WARNING SIGNS
MAINTENANCE OF TRAFFIC DETAILS

DATE REVISED	DATE REVISED	FED.RD. DIST.NO.	STATE	JOB NO.	SHEET NO.	TOTAL SHEETS
01/03/24		6	ARK.	090523	19	103

MAINTENANCE OF TRAFFIC DETAILS

STATE OF ARKANSAS LICENSED PROFESSIONAL ENGINEER No. 11425 TRINITY D. SMITH

01-03-2024

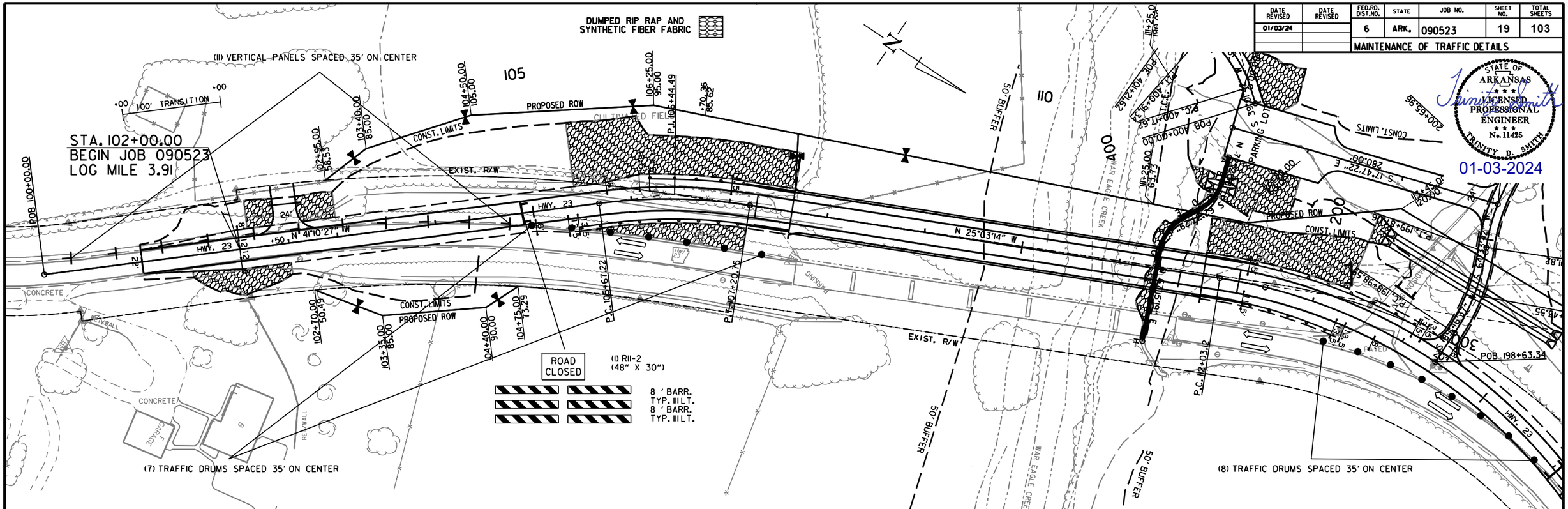

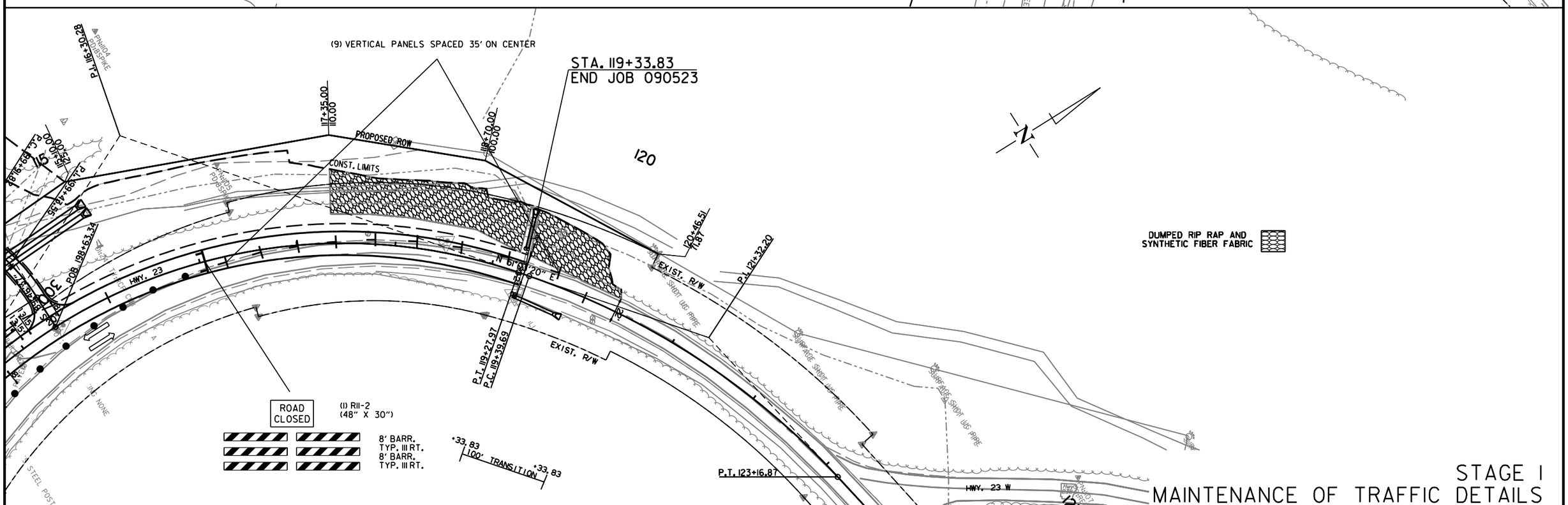

STAGE I
MAINTENANCE OF TRAFFIC DETAILS

mh39735 6/18/2021
R090523.DGN

DATE REVISED	DATE REVISED	FED.RD. DIST.NO.	STATE	JOB NO.	SHEET NO.	TOTAL SHEETS
		6	ARK.	090523	20	103

MAINTENANCE OF TRAFFIC DETAILS

STATE OF ARKANSAS
LICENSED PROFESSIONAL ENGINEER
No. 11425
TRINITY D. SMITH

11-21-2023

ROAD CLOSED

(2) RII-2 (48" X 30")

8' BARR. TYP. III RT.
8' BARR. TYP. III LT.

DUMPED RIP RAP AND SYNTHETIC FIBER FABRIC

STAGE I
MAINTENANCE OF TRAFFIC DETAILS

mh39735 6/18/2021
R090523.DGN

DATE REVISED	DATE REVISED	FED.RD. DIST.NO.	STATE	JOB NO.	SHEET NO.	TOTAL SHEETS
01/03/24		6	ARK.	090523	21	103
		MAINTENANCE OF TRAFFIC DETAILS				

STATE OF ARKANSAS
LICENSED PROFESSIONAL ENGINEER
No. 11425
TRINITY D. SMITH
01-03-2024

STA. 102+00.00
BEGIN JOB 090523
LOG MILE 3.91

(11) VERTICAL PANELS SPACED 35' ON CENTER

100' TRANSITION

(7) TRAFFIC DRUMS SPACED 35' ON CENTER

DUMPED RIP RAP AND SYNTHETIC FIBER FABRIC

(1) R11-2 (48" X 30")
(1) W1-6 (48" X 24")
16' BARR. TYP. III LT.
ROAD CLOSED

(9) VERTICAL PANELS SPACED 35' ON CENTER

STA. 119+33.83
END JOB 090523

100' TRANSITION

(1) R11-2 (48" X 30")
(1) W1-6 (48" X 24")
16' BARR. TYP. III RT.
ROAD CLOSED

DUMPED RIP RAP AND SYNTHETIC FIBER FABRIC

STAGE 2
MAINTENANCE OF TRAFFIC DETAILS

mh39735 6/18/2021
R090523.DGN

DATE REVISED	DATE REVISED	FED.RD. DIST.NO.	STATE	JOB NO.	SHEET NO.	TOTAL SHEETS
		6	ARK.	090523	22	103

PERMANENT PAVEMENT MARKING DETAILS

PERMANENT PAVEMENT MARKINGS

RAISED PAVEMENT MARKERS TYPE II (YEL/YEL) (80' O.C.) = 24 EACH
THERMOPLASTIC PAVEMENT MARKING WHITE (6") = 3813 LIN. FT.
THERMOPLASTIC PAVEMENT MARKING YELLOW (6") = 3869 LIN. FT.
REFLECTORIZED PAINT PAVEMENT MARKING WHITE (6") = 550 LIN FT.
REFLECTORIZED PAINT PAVEMENT MARKING YELLOW (6") = 604 LIN FT.

STATE OF ARKANSAS
LICENSED PROFESSIONAL ENGINEER
No. 11425
TRINITY D. SMITH

Trinity D Smith
11-21-2023

6" DBL. YELLOW THERMOPLASTIC PAVEMENT MARKING & RAISED PAVEMENT MARKERS (TYPE II)(YELLOW/YELLOW) SPACED 80' O.C.

6" WHITE THERMOPLASTIC PAVEMENT MARKING

6" DBL. YELLOW REFLECTORIZED PAVEMENT MARKING

6" WHITE REFLECTORIZED PAINT PAVEMENT MARKING

PERMANENT PAVEMENT MARKING DETAILS

mh39735 6/18/2021
R090523.DGN

DATE REVISED	DATE REVISED	FED.RD. DIST.NO.	STATE	JOB NO.	SHEET NO.	TOTAL SHEETS
		6	ARK.	090523	23	103

PERMANENT PAVEMENT MARKING DETAILS

STATE OF ARKANSAS
LICENSED PROFESSIONAL ENGINEER
No. 11425
TRINITY D. SMITH

11-21-2023

PERMANENT PAVEMENT MARKINGS

RAISED PAVEMENT MARKERS TYPE II (YEL/YEL) (80' O.C.) = 24 EACH
THERMOPLASTIC PAVEMENT MARKING WHITE (6") = 3813 LIN. FT.
THERMOPLASTIC PAVEMENT MARKING YELLOW (6") = 3869 LIN. FT.
REFLECTORIZED PAINT PAVEMENT MARKING WHITE (6") = 550 LIN FT.
REFLECTORIZED PAINT PAVEMENT MARKING YELLOW (6") = 604 LIN FT.

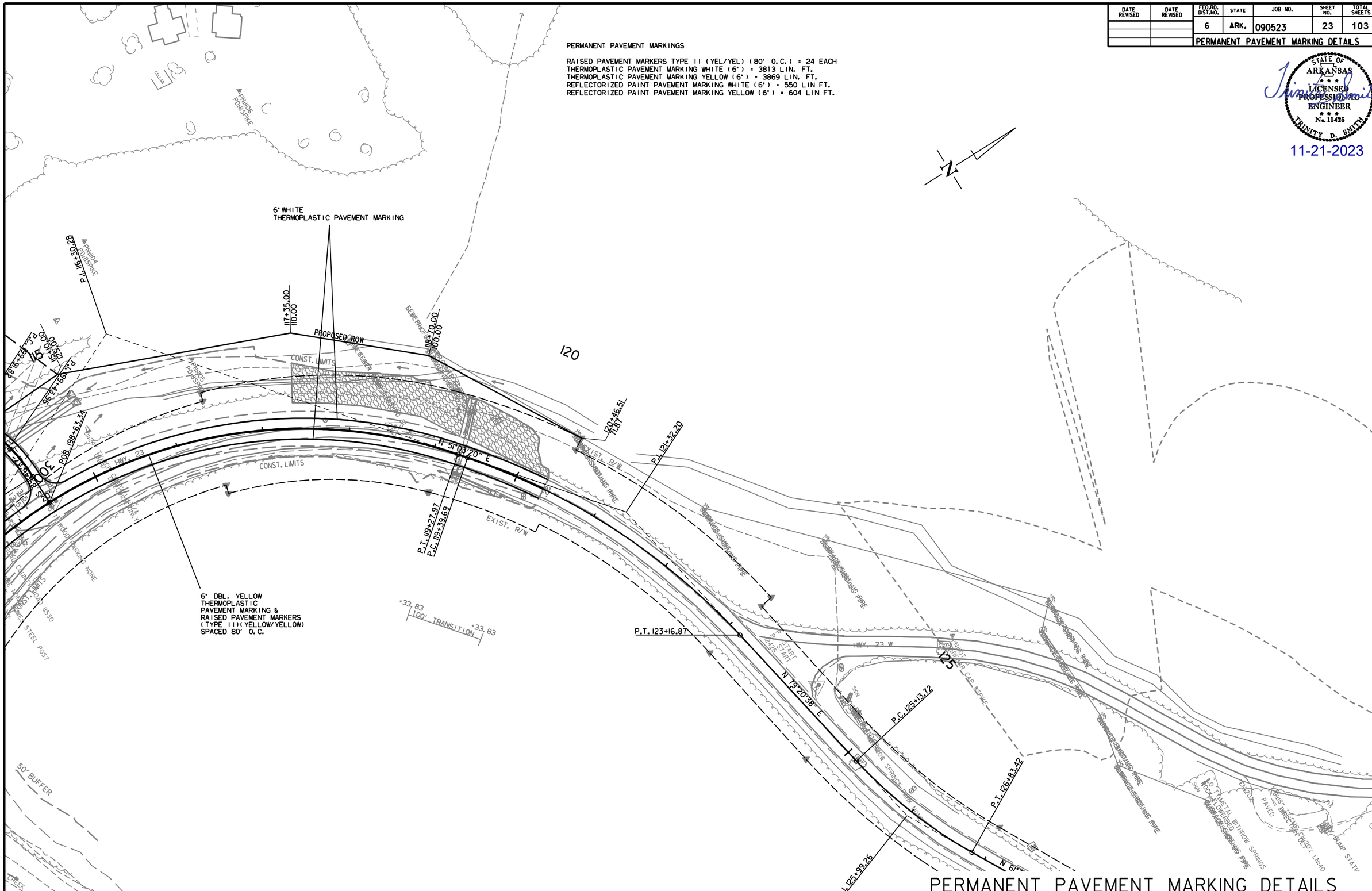

PERMANENT PAVEMENT MARKING DETAILS

mh39735 6/18/2021
R090523.DGN

DATE REVISED	DATE REVISED	FED.RD. DIST.NO.	STATE	JOB NO.	SHEET NO.	TOTAL SHEETS
		6	ARK.	090523	24	103
		QUANTITIES				

STATE OF ARKANSAS
LICENSED PROFESSIONAL ENGINEER
No. 11425
TRINITY D. SMITH

11-21-2023

ADVANCE WARNING SIGNS AND DEVICES

SIGN NUMBER	DESCRIPTION	SIGN SIZE	STAGE 1	STAGE 2	MAXIMUM NUMBER REQUIRED	TOTAL SIGNS REQUIRED		VERTICAL PANELS	TRAFFIC DRUMS	BARRICADES (TYPE III)	
										RIGHT	LEFT
			LIN. FT. - EACH			NO.	SQ. FT.	EACH		LIN. FT.	
W20-1	ROAD WORK 1500 FT.	48"x48"	2	2	2	2	32.0				
W20-1	ROAD WORK 1000 FT.	48"x48"	2	2	2	2	32.0				
W20-1	ROAD WORK 500 FT.	48"x48"	2	2	2	2	32.0				
W20-1	ROAD WORK AHEAD	48"x48"	3	3	3	3	48.0				
G20-2	END ROAD WORK	48"x24"	3	3	3	3	24.0				
R2-1	SPEED LIMIT 35	24"x24"	2	2	2	2	8.0				
R11-2	ROAD CLOSED	48"x30"	3	3	3	3	30.0				
R4-1	DO NOT PASS	24"x30"	2	2	2	2	10.0				
W21-5a	RIGHT SHOULDER CLOSED	36"x36"	2	2	2	2	18.0				
W8-1	BUMP	30"x30"	2	2	2	2	12.5				
	VERTICAL PANELS		20	20	20			20			
	TRAFFIC DRUMS		15	15	15				15		
	TYPE III BARRICADE-RT. (8')		4	4	4					32	
	TYPE III BARRICADE-LT. (8')		4	4	4						32
TOTALS:							246.5	20	15	32	32

NOTE: THIS IS A HIGH TRAFFIC VOLUME ROAD AS DEFINED IN SECTION 604.03, STANDARD SPECIFICATIONS FOR HIGHWAY CONSTRUCTION.

CONSTRUCTION PAVEMENT MARKINGS AND PERMANENT PAVEMENT MARKINGS

DESCRIPTION	STAGE 1	END OF JOB	CONSTRUCTION PAVEMENT MARKINGS	RAISED PAVEMENT MARKERS	THERMOPLASTIC PAVEMENT MARKING		REFLECTORIZED PAINT PAVEMENT MARKING	
				TYPE II	6"		6"	
				(YELLOW/YELLOW)	WHITE	YELLOW	WHITE	YELLOW
	LIN. FT. - EACH		LIN. FT.	EACH	LIN. FT.		LIN. FT.	
CONSTRUCTION PAVEMENT MARKINGS	15470		15470					
RAISED PAVEMENT MARKERS TYPE II (YELLOW/YELLOW)		24		24				
THERMOPLASTIC PAVEMENT MARKING WHITE (6")		3813			3813			
THERMOPLASTIC PAVEMENT MARKING YELLOW (6")		3869				3869		
REFLECTORIZED PAINT PAVEMENT MARKING WHITE (6")		550					550	
REFLECTORIZED PAINT PAVEMENT MARKING YELLOW (6")		604						604
TOTALS:			15470	24	3813	3869	550	604

NOTE: THIS IS A HIGH TRAFFIC VOLUME ROAD AS DEFINED IN SECTION 604.03, STANDARD SPECIFICATIONS FOR HIGHWAY CONSTRUCTION.

NOTE: THE 6" YELLOW STRIPING QUANTITY HAS BEEN ESTIMATED BASED ON A DOUBLE YELLOW CENTERLINE STRIPE FOR THE ENTIRE PROJECT.
THE PROJECT MUST BE MARKED FOR PASSING/NO PASSING ZONES PRIOR TO THE PLACEMENT OF ANY FINAL STRIPING.
CONTACT THE MAINTENANCE DIVISION AFTER THE FINAL LIFT OF SURFACE COURSE HAS BEEN PLACED TO SCHEDULE THE ZONING OF THE PROJECT.

mh39735 6/18/2021
R090523.DGN

DATE REVISED	DATE REVISED	FED.RD. DIST.NO.	STATE	JOB NO.	SHEET NO.	TOTAL SHEETS
		6	ARK.	090523	25	103
		QUANTITIES				

STATE OF ARKANSAS
LICENSED PROFESSIONAL ENGINEER
No. 11425
TRINITY D. SMITH

11-21-2023

CLEARING AND GRUBBING

STATION	STATION	LOCATION	CLEARING	GRUBBING
			STATION	
102+85.00	107+50.00	HWY. 23	6	6
111+90.00	120+33.00	HWY. 23	9	9
TOTALS:			15	15

SOIL LOG

STATION	LATITUDE			LONGITUDE			LOCATION	DEPTH	LIQUID LIMIT	PLASTICITY INDEX	AASHTO CLASSIFICATION	COLOR
	DEG	MIN	SEC	DEG	MIN	SEC		FEET				
109+00.00	36	8	52.90	93	44	17.40	06' RT.	0-3Z	55	36	A-7-6(23	BR
109+00.00	36	8	53.00	93	44	17.40	15' RT.	0.2.5Z	35	16	A-6(6)	BR
122+00.00	36	9	3.20	93	44	26.70	CL.	0-5	26	5	A-4(0)	RD/BR
122+00.00	36	9	3.20	93	44	26.70	CL.	0-5	30	8	A-4(1)	BR
134+70.00	36	9	11.60	93	44	17.10	CL.	0-5	26	9	A-4(2)	RD/BR
143+00.00	36	9	12.10	93	44	5.60	06' LT.	0-5	37	23	A-6(9)	RD/BR
143+00.00	36	9	12.20	93	44	5.60	15' LT	0-5	32	15	A-6(6)	RD/BR

SOIL CHARACTERISTICS TABULATED ABOVE ARE REPRESENTATIVE AT THE LOCATION OF THE SAMPLE, AND FROM SURFACE INDICATIONS ARE TYPICAL FOR THE LIMITS SHOWN. THESE DATA ARE SHOWN FOR INFORMATION ONLY. THE STATE WILL NOT BE RESPONSIBLE FOR VARIATIONS IN THE SOIL CHARACTERISTICS AND/OR EXTENT OF SAME DIFFERING FROM THE ABOVE TABULATIONS.
Z- AUGER REFUSAL
NP - NON-PLASTIC
ND - NOT DETERMINABLE

REMOVAL AND DISPOSAL OF FENCE

STATION	STATION	LOCATION	FENCE
			LIN. FT.
102+70.00	104+75.00	HWY. 23 RT.	205
102+95.00	109+65.00	HWY. 23 LT.	800
TOTAL:			1005

REMOVAL AND DISPOSAL OF CULVERTS

STATION	DESCRIPTION	PIPE CULVERTS
		EACH
114+40.00	HWY. 23 - DBL. 60" X 22' C.M. PIPE CULVERT	2
TOTAL:		2

NOTE: QUANTITIES SHOWN ABOVE SHALL INCLUDE REMOVAL & DISPOSAL OF ALL HEADWALLS AND FLARED END SECTIONS IF APPLICAB_E.

DRIVEWAYS & TURNOUTS

STATION	SIDE	LOCATION	WIDTH	LENGTH	PORTLAND CEMENT CONCRETE DRIVEWAY	ACHM SURFACE COURSE (1/2") 220 LBS. PER SQ. YD. (PG 64-22)		AGGREGATE BASE COURSE (CLASS 7)	SIDE DRAINS 18"	STANDARD DRAWINGS
			FEET		SQ. YD.	SQ. YD.	TON	TON	LIN. FT.	
102+50.00	LT	HWY. 23	24	60.00		110.07	12.11	44.95	34	PCC-1, PCM-1, PCP-1, PCP-2
400+00.00	RT	CANOE ACCESS	16	108.00	194.19					
* ENTIRE PROJECT TEMPORARY DRIVES					100.00			10.00		
TOTAL:					294.19	110.07	12.11	54.95	34	

* QUANTITY ESTIMATED
SEE SECTION 104.03 OF THE STD. SPECS.
TO BE USED IF AND WHERE DIRECTED BY THE ENGINEER.

'* FOR INFORMATION ONLY

NOTE: FOR R.C. PIPE CULVERT INSTALLATIONS USE TYPE 3 BEDDING UNLESS OTHERWISE SPECIFIED.
NOTE: FOR C.M. PIPE CULVERT INSTALLATIONS USE TYPE 2 BEDDING UNLESS OTHERWISE SPECIFIED.

EROSION CONTROL MATTING

STATION	STATION	LOCATION	LENGTH	CLASS 3
			LIN. FT.	SQ. YD.
104+35.00	106+25.00	HWY. 23 RT.	190.00	168.89
111+90.00	119+25.00	HWY. 23 RT.	735.00	653.33
114+40.00	119+00.00	HWY. 23 LT.	460.00	408.89
TOTAL:				1231.11

NOTE: AVERAGE WIDTH = 8'-0"

BENCH MARKS

STATION	LOCATION	BENCH MARKS
		EACH
107+64.00	BRIDGE END	1
TOTAL:		1

NOTE: SHOWN FOR INFORMATION ONLY. BENCH MARKS SHALL BE FURNISHED AND PLACED BY STATE FORCES.

REMOVAL AND DISPOSAL OF ITEMS

STATION	STATION	LOCATION	RETAINING WALLS	SIGN FOUNDATIONS	GUARDRAIL	SIGNS
			LIN. FT.	EACH	LIN. FT.	EACH
107+46.00	107+75.00	HWY. 23 RT.			29	
111+68.00	111+91.00	HWY. 23 LT.	64			
113+55.00	113+55.00	HWY. 23 LT.		2		1
114+38.00	114+38.00	HWY. 23 LT.		2		1
TOTALS:			64	4	29	2

NOTE: THE QUANTITY SHOWN ABOVE FOR THE REMOVAL AND DISPOSAL OF GUARDRAIL SHALL INCLUDE THE REMOVAL AND DISPOSAL OF ALL GUARDRAIL TERMINALS AND TERMINAL ANCHOR POSTS.

REMOVING AND REPLACING TOPSOIL

STATION	STATION	LOCATION / DESCRIPTION	*REMOVING AND REPLACING TOPSOIL
			CU. YD.
101+00.00	107+64.00	HWY. 23	680
111+86.00	119+34.00	HWY. 23	900
TOTALS:			1580

* QUANTITY ESTIMATED.
SEE SECTION 104.03 OF THE STD. SPECS.

mh39735 6/18/2021
R090523.DGN

DATE REVISED	DATE REVISED	FED.RD. DIST.NO.	STATE	JOB NO.	SHEET NO.	TOTAL SHEETS
		6	ARK.	090523	26	103
		QUANTITIES				

STATE OF ARKANSAS
LICENSED PROFESSIONAL ENGINEER
No. 11425
TRINITY D. SMITH

11-21-2023

EARTHWORK

STATION	STATION	LOCATION / DESCRIPTION	UNCLASSIFIED EXCAVATION	COMPACTED EMBANKMENT
			CU. YD.	
102+00.00	119+34.00	STAGE 1 - MAIN LANES	778	40292
102+00.00	119+34.00	STAGE 2 - MAIN LANES	3238	63
198+63.00	202+00.00	STAGE 1 - COUNTY ROAD		12449
200+38.00	302+80.00	STAGE 1 - PARKING DRIVE	406	9365
ENTIRE	PROJECT	APPROACHES	15	35
400+00.00	401+04.00	STAGE 1 - CANOE ACCESS	486	579
500+00.00	502+14.58	STAGE 1 - TRAIL CONNECTOR	392	100
		BRIDGE EXCAVATION	710	
TOTALS:			**6025**	**62883**

SOIL STABILIZATION

STATION	STATION	LOCATION / DESCRIPTION	SOIL STABILIZATION
			TON
ENTIRE	PROJECT	TO BE USED IF AND WHERE	500
		DIRECTED BY THE ENGINEER	
TOTAL:			**500**

QUANTITY ESTIMATED.
SEE SECTION 104.03 OF THE STD. SPECS.

CONCRETE DITCH PAVING

STATION	STATION	LOCATION	LENGTH	"W"	CONC. DITCH PAVING (TYPE B)	SOLID SODDING	WATER
			LIN. FT.	FEET	SQ. YD.	SQ. YD.	M. GAL.
302+25.00	302+80.00	PARKING LOT ROAD	55.00	6.33	38.68	24.44	0.31
400+45.76	401+03.98	CANOE ACCESS	58.22	6.33	40.95	25.88	0.33
TOTALS:					**79.63**	**50.32**	**0.64**

BASIS OF ESTIMATE:
WATER.....12.6 GAL. / SQ. YD. OF SOLID SODDING.

COLD MILLING ASPHALT PAVEMENT

STATION	STATION	LOCATION	AVG. WIDTH	COLD MILLING ASPHALT PAVEMENT
			FEET	SQ. YD.
101+00.00	102+00.00	HWY 23.	22.00	244.44
119+33.83	120+33.83	HWY 23.	22.00	244.44
TOTAL:				**488.88**

NOTE: COORDINATE COLD MILLING STOCKPILE LOCATIONS WITH DISTRICT ENGINEER.
STOCKPILE LOCATIONS SHALL BE NO FURTHER THAN FIVE MILES FROM EACH SITE.

SELECTED PIPE BEDDING

LOCATION	SELECTED PIPE BEDDING
	CU.YD.
ENTIRE PROJECT TO BE USED IF	
AND WHERE DIRECTED BY THE	25
ENGINEER	
TOTAL:	**25**

NOTE: QUANTITY ESTIMATED.
SEE SECTION 104.03 OF THE STD. SPECS.

EROSION CONTROL

STATION	STATION	LOCATION	PERMANENT EROSION CONTROL					TEMPORARY EROSION CONTROL									
			SEEDING	LIME	MULCH COVER	WATER	SECOND SEEDING APPLICATION	TEMPORARY SEEDING	MULCH COVER	WATER	SAND BAG DITCH CHECKS (E-5)	ROCK DITCH CHECKS (E-6)	FILTER SOCK (E-3)	SILT FENCE (E-11)	SEDIMENT BASIN (E-14)	OBLITERATION OF SEDIMENT BASIN	*SEDIMENT REMOVAL & DISPOSAL
			ACRE	TON	ACRE	M.GAL.	ACRE	ACRE	ACRE	M.GAL.	BAG	CU.YD.	LIN. FT.	LIN. FT.	CU.YD.	CU.YD.	CU. YD.
101+00.00	120+34.00	CLEARING AND GRUBBING						6.63	6.63	135.3	264	42		1539			83
101+00.00	120+34.00	STAGE 1						4.64	4.64	94.7	66	15	445	1870			77
101+00.00	120+34.00	STAGE 2	4.48	8.96	4.48	457.0	4.48	1.99	1.99	40.6	132	12					10
*ENTIRE PROJECT TO BE USED IF AND WHERE DIRECTED BY THE ENGINEER.			1.98	3.96	1.98	202.0	1.98	11.95	11.95	243.8			111	750	300	300	328
TOTALS:			**6.46**	**12.92**	**6.46**	**659.0**	**6.46**	**25.21**	**25.21**	**514.4**	**462**	**69**	**556**	**4159**	**300**	**300**	**498**

BASIS OF ESTIMATE:
LIME .....2 TONS / ACRE OF SEEDING
WATER.....102.0 M.G. / ACRE OF SEEDING
WATER.....20.4 M.G. / ACRE OF TEMPORARY SEEDING
WATER.....12.6 GAL. / SQ. YD. OF SOLID SODDING
SAND BAG DITCH CHECKS.....22 BAGS / LOCATION
ROCK DITCH CHECKS.....3 CU.YD./LOCATION

NOTE: THE TEMPORARY EROSION CONTROL DEVICES SHOWN ABOVE AND ON THE PLANS SHALL BE INSTALLED IN SUCH A SEQUENCE AS TO DETER EROSION AND SEDIMENTATION ON U.S. WATERWAYS AS EXPLAINED BY THE NATIONAL POLLUTANT DISCHARGE ELIMINATION SYSTEM PERMIT.

*QUANTITIES ESTIMATED.
SEE SECTION 104.03 OF THE STD. SPECS.

mh39735 6/18/2021
R090523.DGN

DATE REVISED	DATE REVISED	FED.RD. DIST.NO.	STATE	JOB NO.	SHEET NO.	TOTAL SHEETS
		6	ARK.	090523	27	103
		QUANTITIES				

STATE OF ARKANSAS
LICENSED PROFESSIONAL ENGINEER
No. 11425
TRINITY D. SMITH

11-21-2023

STRUCTURES

STATION	DESCRIPTION	REINFORCED CONCRETE PIPE CULVERT (CLASS III) 36" LIN. FT.	SIDE DRAIN 60" EACH	FLARED END SECTIONS FOR R.C. PIPE CULVERTS 36" EACH	FLARED END SECTION ALTERNATES FOR PIPE CULVERT ALTERNATES 60" EACH	JUNCT. BOXES (TYPE E) EACH	SOLID SODDING SQ.YD.	WATER M.GAL.	STD. DWG. NOS.
114+40.00	CONST. DBL. 60" X 144' SIDE DRAIN ON LT. W/FES		288		4		48	0.60	FES-1, FES-2, PCC-1, PCM-1
119+34.00	CONST. JUNCTION BOX (TYPE E) ON RT. AND 36" X 42' PIPE OUTLET W/FES	42		1		1	17	0.21	FES-1, FES-2, FPC-9, PCC-1
119+34.00	EXTEND 36" R.C. PIPE CULVERT	34		1			17	0.21	PCC-1
500+28	CONST. DBL. 60" X 14' SIDE DRAIN ON LT. W/FES		28		2		48	0.60	FES-1, FES-23, PCC-1, PCM-1
TOTALS:		76	316	2	6	1	130	1.62	

BASIS OF ESTIMATE:
WATER.....12.6 GAL. / SQ. YD. OF SOLID SODDING

NOTE: FOR R.C. PIPE CULVERT INSTALLATIONS USE TYPE 3 BEDDING UNLESS OTHERWISE SPECIFIED.

GUARDRAIL

STATION	STATION	LOCATION	GUARDRAIL (TYPE A) LIN. FT.	THRIE BEAM GUARDRAIL TERMINAL EACH	GUARDRAIL TERMINAL (TYPE 2) EACH
105+45.15	107+63.90	RT. SIDE	150	1	1
107+70.15	107+63.90	LT. SIDE	75	1	1
111+86.10	112+79.85	RT. SIDE	75	1	1
111+86.10	114+04.85	LT. SIDE	150	1	1
TOTALS:			450	4	4

MAILBOXES

LOCATION	MAILBOXES EACH	MAILBOX SUPPORTS (SINGLE) EACH
ENTIRE PROJECT	6	6
TOTALS:	6	6

CENTERLINE RUMBLE STRIPES IN ASPHALT ROADWAYS

STATION	STATION	LOCATION	*CENTERLINE RUMBLE STRIPES IN ASPHALT ROADWAYS LIN.FT.
101+00.00	107+27.00	HWY. 23	627
112+22.00	120+34.00	HWY. 23	812
TOTAL:			1439

* QUANTITY ESTIMATED.
SEE SECTION 104.03 OF THE STD. SPECS.
TO BE USED IF AND WHERE DIRECTED BY THE ENGINEER.

ASPHALT CONCRETE PATCHING FOR MAINTENANCE OF TRAFFIC

LOCATION	TON	TACK COAT GALLON
ENTIRE PROJECT - TO BE USED IF AND WHERE	10	20
DIRECTED BY THE ENGINEER		
TOTALS:	10	20

BASIS OF ESTIMATE:
ASPHALT CONCRETE PATCHING FOR MAINTENANCE OF TRAFFIC...25 TON/MILE
TACK COAT FOR MAINTENANCE OF TRAFFIC.....50 GAL./MILE

FENCING

STATION	STATION	LOCATION	WIRE FENCE (TYPE D) LIN. FT.	* 16'-0" GATES EACH
102+95.00	107+58.00	HWY. 23 LT.	463	1
107+58.00	109+53.00	HWY. 23 LT.	195	
TOTALS:			658	1

* DENOTES ALTERNATE BID ITEM.

RUMBLE STRIPS IN ASPHALT SHOULDERS

STATION	STATION	LOCATION	* RUMBLE STRIPS IN ASPHALT SHOULDERS LIN.FT.
102+00.00	107+27.00	HWY. 23 LT & RT	1054
112+22.00	119+34.00	HWY. 23 LT & RT	1424
TOTAL:			2478

* QUANTITY ESTIMATED.
SEE SECTION 104.03 OF THE STD. SPECS.
TO BE USED IF AND WHERE DIRECTED BY THE ENGINEER.

DUMPED RIPRAP AND FILTER BLANKET

STATION	STATION	LOCATION	DUMPED RIPRAP CU. YD.	FILTER BLANKET SQ. YD.
	113+40.00	OUTLET OF PIPE CULVERT	10	22
101+00.00	103+00.00	HWY. 23 LT EMBANKMENT	111	222
101+50.00	102+50.00	HWY. 23 RT EMBANKMENT	56	111
105+44.00	107+64.00	HWY. 23 LT EMBANKMENT	269	537
105+30.00	107+64.00	HWY. 23 RT EMBANKMENT	115	230
111+86.00	113+30.00	HWY. 23 LT EMBANKMENT	407	813
111+86.00	114+05.00	HWY. 23 RT EMBANKMENT	147	293
117+35.00	119+34.00	HWY. 23 LT EMBANKMENT	451	901
302+00.00	302+40.00	PARKING LOT DRIVE LT EMBANKMENT	80	160
400+00.00	401+00.00	CANOE ACCESS RT EMBANKMENT	195	390
500+00.00	502+14.58	TRAIL CONNECTOR	62	124
		*TO BE USED IF AND WHERE DIRECTED BY THE ENGINEER	210	420
TOTALS:			2113	4223

*NOTE: QUANTITY ESTIMATED.
SEE SECTION 104.03 OF THE STANDARD SPECIFICATIONS

NOTE: FILTER BLANKET SHALL BE GEOTEXTILE FABRIC (TYPE 5).

ACHM PATCHING OF EXISTING ROADWAY

DESCRIPTION	TON
ENTIRE PROJECT - TO BE USED IF AND WHERE	50
DIRECTED BY THE ENGINEER	
TOTAL:	50

NOTE: QUANTITY ESTIMATED.
SEE SECTION 104.03 OF THE STD. SPECS.

APPROACH GUTTERS & SLABS

STATION	STATION	LOCATION	APPROACH GUTTER (TYPE 1 SPECIAL) CU.YD.	APPROACH SLABS (TYPE C1) CU.YD.	REINFORCING STEEL-RDWY. (GR. 60) POUND	AGGREGATE BASE CRS. (CLASS 7) TON
107+27.40	107+63.90	HWY. 23		49.15	5775	19.60
107+51.90	107+63.90	HWY. 23 LT. SIDE	14.00		770	
107+51.90	107+63.90	HWY. 23 RT. SIDE	14.00		770	
111+86.10	111+98.10	HWY. 23 LT. SIDE	14.00		770	
111+86.10	111+98.10	HWY. 23 RT. SIDE	14.00		770	
111+86.10	112+22.60	HWY. 23		49.15	5775	19.60
TOTALS:			56.00	98.30	14630	39.20

NOTE: USE T =" FOR 8' SHOULDER.

mh39735 6/18/2021
R090523.DGN

DATE REVISED	DATE REVISED	FED.RD. DIST.NO.	STATE	JOB NO.	SHEET NO.	TOTAL SHEETS
		6	ARK.	090523	28	103
		QUANTITIES				

STATE OF ARKANSAS
LICENSED PROFESSIONAL ENGINEER
No. 11425
TRINITY D. SMITH

11-21-2023

BASE AND SURFACING

STATION	STATION	LOCATION	LENGTH	AGGREGATE BASE COURSE (CLASS 7)		TACK COAT							ACHM BINDER COURSE (1")				ACHM SURFACE COURSE (1/2")								
						(0.05 GAL. PER SQ. YD.)			(0.17 GAL. PER SQ. YD.)																
				TON / STATION	TON	TOTAL WID.	SQ.YD.	GALLON	TOTAL WID.	SQ.YD.	GALLON	TOTAL GALLONS	AVG. WID.	SQ.YD.	POUND / SQ.YD.	PG 64-22	AVG. WID.	SQ.YD.	POUND / SQ.YD.	PG 64-22	AVG. WID.	SQ.YD.	POUND / SQ.YD.	PG 64-22	TOTAL PG 64-22
			FEET			FEET			FEET				FEET			TON	FEET			TON	FEET			TON	TON
MAIN LANES																									
101+00.00	102+00.00	HWY. 23 - TRANSITION	100.00	75.75	75.75				23.00	255.56	43.45	43.45									23.00	255.56	220.00	28.11	28.11
102+00.00	104+85.00	HWY. 23 - NOTCH & WIDEN	285.00	151.50	431.78	12.71	402.48	20.12				20.12	6.46	204.57	330.00	33.75	6.25	197.92	220.00	21.77	40.00	1266.67	220.00	139.33	161.10
104+85.00	107+27.40	HWY. 23 - FULL DEPTH	242.40	221.25	536.31	48.71	1311.92	65.60				65.60	24.46	658.79	330.00	108.70	24.25	653.13	220.00	71.84	40.00	1077.33	220.00	118.51	190.35
112+22.60	115+76.10	HWY. 23 - FULL DEPTH	353.50	221.25	782.12	48.71	1913.22	95.66				95.66	24.46	960.73	330.00	158.52	24.25	952.49	220.00	104.77	40.00	1571.11	220.00	172.82	277.59
115+76.10	119+33.83	HWY. 23 - NOTCH & WIDEN	357.73	151.50	541.96	12.71	505.19	25.26				25.26	6.46	256.77	330.00	42.37	6.25	248.42	220.00	27.33	40.00	1589.91	220.00	174.89	202.22
119+33.83	120+33.83	HWY. 23 - TRANSITION	100.00	75.75	75.75				23.00	255.56	43.45	43.45									23.00	255.56	220.00	28.11	28.11
COUNTY ROAD 8530																									
198+75.34	198+98.61	CO. RD. - TURNOUT	23.27	VAR.	30.22												VAR.	28.20	220.00	3.10					3.10
198+98.61	202+00.00	CO. RD. - FULL DEPTH	301.39	105.25	317.21												20.00	669.76	220.00	73.67					73.67
PARKING LOT DRIVE																									
300+10.00	300+22.84	PARKING DRIVE - TURNOUT	12.84	VAR.	45.22												VAR.	62.85	220.00	6.91					6.91
300+22.84	301+60.74	PARKING DRIVE - FULL DEPTH	137.90	105.25	145.14												20.00	306.44	220.00	33.71					33.71
301+60.74	301+80.00	PARKING DRIVE - PARKING LOT TURNOUT	19.26	VAR.	63.01												VAR.	75.11	220.00	8.26					8.26
301+80.00	302+80.00	PARKING LOT	100.00	286.75	286.75												60.00	666.67	220.00	73.33					73.33
ADDITIONAL FOR LEVELING AND GRADE RAISE																									
102+00.00	103+60.00	HWY. 23 - LEVELING	160.00						22.00	391.11	66.49	66.49									22.00	391.11	VAR.	38.24	38.24
103+60.00	104+85.00	HWY. 23 - GRADE RAISE	125.00						22.00	305.56	51.95	51.95	22.00	305.56	VAR.	50.70									
115+76.10	119+90.00	HWY. 23 - GRADE RAISE	413.90						22.00	1011.76	172.00	172.00	22.00	1011.76	VAR.	167.67									
119+90.00	120+33.83	HWY. 23 - LEVELING	43.83						22.00	107.14	18.21	18.21									22.00	107.14	VAR.	14.47	14.47
ADDITIONAL FOR GUARDRAIL WIDENING																									
105+01.15	105+34.15	GUARDRAIL TAPER RT.	33.00	12.38	4.09																2.75	10.08	220.00	1.11	1.11
105+34.15	105+44.15	GUARDRAIL WIDENING RT.	10.00	24.75	2.40																5.50	6.11	220.00	0.67	0.67
105+44.15	107+19.15	GUARDRAIL TAPER RT.	175.00	20.50	35.88																4.50	87.50	220.00	9.63	9.63
107+19.15	107+63.90	GUARDRAIL WIDENING RT.	44.75	16.25	7.27																3.50	17.40	220.00	1.91	1.91
105+76.15	106+09.15	GUARDRAIL TAPER LT.	33.00	12.38	4.09																2.75	10.08	220.00	1.11	1.11
106+09.15	106+19.15	GUARDRAIL WIDENING LT.	10.00	24.75	2.48																5.50	6.11	220.00	0.67	0.67
106+19.15	107+19.15	GUARDRAIL TAPER LT.	100.00	20.50	20.50																4.50	50.00	220.00	5.50	5.50
107+19.15	107+63.90	GUARDRAIL WIDENING LT.	44.75	16.25	7.27																3.50	17.40	220.00	1.91	1.91
111+86.10	112+29.85	GUARDRAIL WIDENING RT.	43.75	16.25	7.11																3.50	17.01	220.00	1.87	1.87
112+29.85	113+29.85	GUARDRAIL TAPER RT.	100.00	20.50	20.50																4.50	50.00	220.00	5.50	5.50
113+29.85	113+39.85	GUARDRAIL WIDENING RT.	10.00	24.75	2.48																5.50	6.11	220.00	0.67	0.67
113+39.85	113+72.85	GUARDRAIL TAPER RT.	33.00	12.38	4.09																2.75	10.08	220.00	1.11	1.11
111+86.10	112+29.85	GUARDRAIL WIDENING LT.	43.75	16.25	7.11																3.50	17.01	220.00	1.87	1.87
112+29.85	114+04.85	GUARDRAIL TAPER LT.	175.00	20.50	35.88																4.50	87.50	220.00	9.63	9.63
114+04.85	114+14.85	GUARDRAIL WIDENING LT.	10.00	24.75	2.48																5.50	6.11	220.00	0.67	0.67
114+14.85	114+47.85	GUARDRAIL TAPER LT.	33.00	12.38	4.09																2.75	10.08	220.00	1.11	1.11
ADDITIONAL FOR SUPERELEVATION																									
103+42.22	106+42.22	HWY. 23 - SUPER TRANSITION	300.00	87.25	261.75																				
106+42.22	106+45.75	HWY. 23 - MAX SUPER	3.53	174.50	6.16																				
106+45.75	106+63.90	HWY. 23 - SUPER TRANSITION	18.15	141.00	25.59																				
111+86.10	112+78.12	HWY. 23 - SUPER TRANSITION	92.02	146.63	134.93																				
112+78.12	118+52.97	HWY. 23 - MAX SUPER	574.85	174.50	1003.11																				
118+52.97	120+33.83	HWY. 23 - SUPER TRANSITION	180.86	155.31	280.89																				
TOTALS:					**5211.45**		**4132.81**	**206.64**		**2326.69**	**395.55**	**602.19**		**3398.18**		**561.71**		**3860.99**		**424.69**		**6922.97**		**759.42**	**1184.11**

BASIS OF ESTIMATE:
ACHM SURFACE COURSE (1/2").....94.5% MIN. AGGR.....5.5% ASPHALT BINDER
ACHM BINDER COURSE (1").....95.5% MIN. AGGR.....4.5% ASPHALT BINDER
MAXIMUM NUMBER OF GYRATIONS = 115 FOR PG 64-22
TACK COAT QUANTITIES WERE CALCULATED USING THE EMULSIFIED ASPHALT RATES. REFER TO SS-400-1 FOR THE RESIDUAL ASPHALT APPLICATION RATES.

mh39735 6/18/2021
R090523.DGN

DATE REVISED	DATE REVISED	FED. RD. DIST. NO.	STATE	JOB NO.	SHEET NO.	TOTAL SHEETS
		6	ARK.	090523	29	103
		07566 - QUANTITIES - 64451				

SCHEDULE OF BRIDGE QUANTITIES - JOB NO. 090523

BRIDGE NO.	NAME PLATE TITLE	UNIT OF STRUCTURE	ITEM NO.	205	SP, SS & 802	SP, SS, & 802	SP & 803	SS & 804	SS & 804	SS & 805	SP, SS & 807	SS & 807	SS & 808	SS & 809	812	SS & 816	SS & 816
			ITEM	REMOVAL OF EXISTING BRIDGE STRUCTURE (SITE NO.)	CLASS S CONCRETE-BRIDGE	CLASS S(AE) CONCRETE-BRIDGE	CLASS 2 PROTECTIVE SURFACE TREATMENT	REINFORCING STEEL-BRIDGE (GRADE 60)	EPOXY COATED REINFORCING STEEL (GRADE 60)	(1) STEEL PILING (HP14x73)	STRUCTURAL STEEL IN BEAM SPANS (A709, GR. 50W)	(2) PAINTING STRUCTURAL STEEL	ELASTOMERIC BEARINGS	SILICONE JOINT SEALANT	BRIDGE NAME PLATE (TYPE D)	FILTER BLANKET	FOUNDATION PROTECTION RIPRAP
			UNIT	LUMP SUM	CU. YD.	CU. YD.	SQ. YD.	POUND	POUND	LIN. FT.	POUND	TON	CU. IN.	LIN. FT.	EACH	SQ. YD.	TON
07566	HIGHWAY 23 OVER WAR EAGLE CREEK	BENT 1			52.05			4,723	1,690	175	3,185		3,400.0	42		414	416
		BENT 2			52.00			11,428					3,120.0				
		BENT 3			56.40			11,639					3,120.0				
		BENT 4			57.30			12,326					3,120.0				
		BENT 5			57.40			12,351			3,185		3,120.0				
		BENT 6			53.45			4,723	1,690	150			3,400.0			512	868
		420'-0" CONTINUOUS W-BEAM UNIT				582.00	1,867.0		214,400		516,930	52.0		42	1		
		SITE NO. 1 (EXISTING BR. NO. 03583)		1													
TOTALS FOR JOB NO. 090523				—	328.60	582.00	1,867.0	57,190	217,780	325	523,300	52.0	19,280.0	84	1	926	1,284

BRIDGE NO.	NAME PLATE TITLE	UNIT OF STRUCTURE	ITEM NO.	SP JOB 090523	SP JOB 090523	SP JOB 090523	SP JOB 090523	SP JOB 090523	SP JOB 090523
			ITEM	ARCHITECTURAL FINISH	STAINING CONCRETE SURFACES	DRILLED SHAFT (66" DIA.)	PERMANENT STEEL CASING (72" DIA.)	CROSSHOLE SONIC LOGGING (66" DIA.)	(3) CORING DRILLED SHAFT
			UNIT	SQ. FT.	SQ. FT.	LIN. FT.	LIN. FT.	EACH	LIN. FT.
07566	HIGHWAY 23 OVER WAR EAGLE CREEK	BENT 1		150	355				
		BENT 2				57	35	2	28.5
		BENT 3				64	42	2	32.0
		BENT 4				76	54	2	38.0
		BENT 5				77	55	2	38.5
		BENT 6		150	355				
		420'-0" CONTINUOUS W-BEAM UNIT		6,985	9,850				
		SITE NO. 1 (EXISTING BR. NO. 03583)							
TOTALS FOR JOB NO. 090523				7,285	10,560	274	186	8	137

(1) All steel piling shall be Grade 50 and are required to have approved driving points which will not be paid for directly, but will be considered subsidiary to the items "Steel Piling (HP14x73)."

(2) The color of paint shall be Brown equal to or close to Federal Std. 595B Color Chip No. 30070 and as approved by the Engineer.

(3) The quantities shown for Coring Drilled Shaft are for estimating and bidding purposes only. Actual quantities will be determined in the field.

CHRIS WILLIAMS
DESIGN SECTION SUPERVISOR

STATE OF ARKANSAS
LICENSED PROFESSIONAL ENGINEER
No. 9235
11/6/23
CHARLES R. ELLIS

BRIDGE ENGINEER

SCHEDULE OF BRIDGE QUANTITIES
WAR EAGLE CREEK STR. & APPRS. (S)
MADISON COUNTY

ROUTE 23 SEC. 9

ARKANSAS STATE HIGHWAY COMMISSION
LITTLE ROCK, ARK.

DRAWN BY: DBS DATE: 8/18/2021 FILENAME: b090523_q1.dgn
CHECKED BY: CMW DATE: 8/22/2023 SCALE: NO SCALE
DESIGNED BY: - DATE: -

BRIDGE NO. 07566 DRAWING NO. 64451

PRINT DATE: 10/24/2023

DATE REVISED	DATE REVISED	FED.RD. DIST.NO.	STATE	JOB NO.	SHEET NO.	TOTAL SHEETS
01/03/24		6	ARK.	090523	30	103
		SUMMARY OF QUANTITIES & REVISIONS				

STATE OF ARKANSAS
LICENSED PROFESSIONAL ENGINEER
No. 11425
TRINITY D. SMITH

01-03-2024

SUMMARY OF QUANTITIES (BOX 1 OF 2)

	ITEM NUMBER	ITEM		QUANTITY	UNIT
	201	CLEARING		15	STATION
	201	GRUBBING		15	STATION
	202	REMOVAL AND DISPOSAL OF FENCE		1005	LIN. FT.
	202	REMOVAL AND DISPOSAL OF RETAINING WALLS		64	LIN. FT.
	202	REMOVAL AND DISPOSAL OF SIGN FOUNDATIONS		4	EACH
	202	REMOVAL AND DISPOSAL OF PIPE CULVERTS		2	EACH
	202	REMOVAL AND DISPOSAL OF GUARDRAIL		29	LIN. FT.
	202	REMOVAL AND DISPOSAL OF SIGNS		2	EACH
	SP, SS, & 210	UNCLASSIFIED EXCAVATION		6025	CU. YD.
	SP & 210	COMPACTED EMBANKMENT		62883	CU. YD.
	SP	REMOVING AND REPLACING TOPSOIL		1580	CU. YD.
	SP & 210	SOIL STABILIZATION		500	TON
	SP, SS, & 303	AGGREGATE BASE COURSE (CLASS 7)		5306	TON
	SS & 401	TACK COAT		622	GAL.
	SP, SS, & 406	MINERAL AGGREGATE IN ACHM BINDER COURSE (1")		537	TON
	SP, SS, & 406	ASPHALT BINDER (PG 64-22) IN ACHM BINDER COURSE (1")		25	TON
	SP, SS, & 407	MINERAL AGGREGATE IN ACHM SURFACE COURSE (1/2")		1130	TON
	SP, SS, & 407	ASPHALT BINDER (PG 64-22) IN ACHM SURFACE COURSE (1/2")		66	TON
	SP & 412	COLD MILLING ASPHALT PAVEMENT		489	SQ. YD.
	SP, SS, & 414	ASPHALT CONCRETE PATCHING FOR MAINTENANCE OF TRAFFIC		10	TON
	SP, SS, & 415	ACHM PATCHING OF EXISTING ROADWAY		50	TON
	SP, SS, & 504	APPROACH SLABS		98.30	CU. YD.
	SP, SS, & 504	APPROACH GUTTERS		56.00	CU. YD.
	SP, SS, & 505	PORTLAND CEMENT CONCRETE DRIVEWAY		294.19	SQ. YD.
	601	MOBILIZATION		1.00	LUMP SUM
	SP & 602	FURNISHING FIELD OFFICE		1	EACH
	SS & 603	MAINTENANCE OF TRAFFIC		1.00	LUMP SUM
	SS & 604	SIGNS		247	SQ. FT.
	SS & 604	BARRICADES		64	LIN. FT.
	SS & 604	TRAFFIC DRUMS		15	EACH
	604	CONSTRUCTION PAVEMENT MARKINGS		15470	LIN. FT.
	SS & 604	VERTICAL PANELS		20	EACH
	SP, SS, & 605	CONCRETE DITCH PAVING (TYPE B)		80	SQ. YD.
	SS & 606	36" REINFORCED CONCRETE PIPE CULVERTS (CLASS III)		76	LIN. FT.
	SP, SS, & 606	18" SIDE DRAIN		34	LIN. FT.
	SS & 606	60" SIDE DRAIN		316	LIN. FT.
	SS & 606	36" FLARED END SECTIONS FOR REINFORCED CONCRETE PIPE CULVERTS		2	EACH
*	SS & 606	60" FLARED END SECTIONS FOR REINFORCED CONCRETE PIPE CULVERTS	(ALTERNATE NO. 1)	6	EACH
*	SS & 606	60" FLARED END SECTIONS FOR CORRUGATED STEEL PIPE CULVERTS	(ALTERNATE NO. 2)	6	EACH
	SS & 606	SELECTED PIPE BEDDING		25	CU. YD.
	SS & 609	JUNCTION BOXES (TYPE E)		1	EACH
	SS & 617	GUARDRAIL (TYPE A)		450	LIN. FT.
	SS & 617	GUARDRAIL TERMINAL (TYPE 2)		4	EACH
	SS & 617	THRIE BEAM GUARDRAIL TERMINAL		4	EACH
	SS & 619	WIRE FENCE (TYPE D)		658	LIN. FT.
*	SS & 619	16' STEEL GATES	(ALTERNATE NO. 1)	1	EACH
*	SS & 619	16' ALUMINUM GATES	(ALTERNATE NO. 2)	1	EACH
	620	LIME		13	TON
	620	SEEDING		6.46	ACRE
	SS & 620	MULCH COVER		31.67	ACRE
	620	WATER		1175.7	M. GAL.
	621	TEMPORARY SEEDING		25.21	ACRE
	621	SILT FENCE		4159	LIN. FT.
	621	SAND BAG DITCH CHECKS		462	BAG
	621	SEDIMENT BASIN		300	CU. YD.
	621	OBLITERATION OF SEDIMENT BASIN		300	CU. YD.
	621	SEDIMENT REMOVAL AND DISPOSAL		498	CU. YD.
	621	ROCK DITCH CHECKS		69	CU. YD.
	SS & 621	FILTER SOCK (18")		556	LIN. FT.
	623	SECOND SEEDING APPLICATION		6.46	ACRE
	624	SOLID SODDING		180	SQ. YD.
	626	EROSION CONTROL MATTING (CLASS 3)		1231	SQ. YD.
	635	ROADWAY CONSTRUCTION CONTROL		1.00	LUMP SUM
	637	MAILBOXES		6	EACH
	637	MAILBOX SUPPORTS (SINGLE)		6	EACH
	642	RUMBLE STRIPS IN ASPHALT SHOULDERS		2478	LIN. FT.
	SP & 642	CENTERLINE RUMBLE STRIPES IN ASPHALT ROADWAYS		1439	LIN. FT.
	718	REFLECTORIZED PAINT PAVEMENT MARKING WHITE (6")		550	LIN. FT.
	718	REFLECTORIZED PAINT PAVEMENT MARKING YELLOW (6")		604	LIN. FT.
	719	THERMOPLASTIC PAVEMENT MARKING WHITE (6")		3813	LIN. FT.
	719	THERMOPLASTIC PAVEMENT MARKING YELLOW (6")		3869	LIN. FT.
	721	RAISED PAVEMENT MARKERS (TYPE II)		24	EACH
	SS & 804	REINFORCING STEEL-ROADWAY (GRADE 60)		14630	POUND
	SS & 816	FILTER BLANKET		4223	SQ. YD.
	SS & 816	DUMPED RIPRAP		2113	CU. YD.

* DENOTES ALTERNATE BID ITEMS.

SUMMARY OF QUANTITIES (BOX 2 OF 2)

ITEM NUMBER	ITEM	QUANTITY	UNIT
205	REMOVAL OF EXISTING BRIDGE STRUCTURE (SITE NO. 1)	1.00	LUMP SUM
636	BRIDGE CONSTRUCTION CONTROL	1.00	LUMP SUM
SP, SS & 802	CLASS S CONCRETE-BRIDGE	328.60	CU. YD.
SP, SS & 802	CLASS S(AE) CONCRETE-BRIDGE	582.00	CU. YD.
SP & 803	CLASS 2 PROTECTIVE SURFACE TREATMENT	1867.0	SQ. YD.
SS & 804	REINFORCING STEEL-BRIDGE (GRADE 60)	57190	POUND
SS & 804	EPOXY COATED REINFORCING STEEL (GRADE 60)	217780	POUND
SS & 805	STEEL PILING (HP 14X73)	325	LIN. FT.
SP, SS, & 807	STRUCTURAL STEEL IN BEAM SPANS (A709, GR. 50W)	523300	POUND
SS & 807	PAINTING STRUCTURAL STEEL	52.0	TON
SS & 808	ELASTOMERIC BEARINGS	19280.0	CU. IN.
SS & 809	SILICONE JOINT SEALANT	84	LIN. FT.
812	BRIDGE NAME PLATE (TYPE D)	1	EACH
SS & 816	FILTER BLANKET	926	SQ. YD.
SS & 816	FOUNDATION PROTECTION RIPRAP	1284	TON
SP	ARCHITECTURAL FINISH	7285	SQ. FT.
SP	STAINING CONCRETE SURFACES	10560	SQ. FT.
SP	CORING DRILLED SHAFT	137	LIN. FT.
SP	DRILLED SHAFT (66" DIAMETER)	274	LIN. FT.
SP	PERMANENT STEEL CASING (72" DIAMETER)	186	LIN. FT.
SP	CROSSHOLE SONIC LOGGING (66" DIAMETER)	8	EACH

REVISIONS

DATE	REVISION	SHEET NUMBER
1/3/2024	REVISED BEGIN JOB LOG MILE	1,13,15,17,19,21, 30, 32, & 36

mh39735 6/18/2021
R090523.DGN

DATE REVISED	DATE REVISED	FED.RD. DIST.NO.	STATE	JOB NO.	SHEET NO.	TOTAL SHEETS
		6	ARK.	090523	31	103
		SURVEY CONTROL DETAILS				

STATE OF ARKANSAS
LICENSED PROFESSIONAL ENGINEER
No. 11425
TRINITY D. SMITH

11-21-2023

SURVEY CONTROL COORDINATES

Project Name: s090423
Date: 3/17/2016
Coordinate System: ARKANSAS STATE PLANE - NORTH ZONE BASED ON GPS CONTROL, PROJECTED TO GROUND.
Units: U.S. SURVEY FOOT

Point Name	Northing	Easting	Elev	Feature	Description
1	663434.9725	799316.3538	1321.61	CTL	AHTD STD. MON. STAMPED PN: 1
2	664141.2260	799371.1258	1294.08	CTL	AHTD STD. MON. STAMPED PN: 2
3	664938.4478	799352.7519	1289.66	CTL	AHTD STD. MON. STAMPED PN: 3
4	665521.1025	798899.7100	1252.79	CTL	AHTD STD. MON. STAMPED PN: 4
5	666214.2097	798587.4301	1252.66	CTL	AHTD STD. MON. STAMPED PN: 5
6	666589.5315	798722.1513	1255.75	CTL	AHTD STD. MON. STAMPED PN: 6
7	666843.5978	799232.0071	1289.55	CTL	AHTD STD. MON. STAMPED PN: 7
8	667045.1477	799863.2782	1353.40	CTL	AHTD STD. MON. STAMPED PN: 8
9	666998.1031	800718.0645	1404.73	CTL	AHTD STD. MON. STAMPED PN: 9
10	667277.1871	801330.1194	1427.61	CTL	AHTD STD. MON. STAMPED PN: 10
100	662830.6694	799778.9750	1320.09	GPS	AHTD GPS *440204
101	664617.7843	799359.7383	1297.67	GPS	AHTD GPS *440204
900	662588.4266	799890.6951	1311.11	TBM	CHISLED SQR IN CONC HW
901	665610.6558	798860.8856	1253.52	TBM	CHISLED SQR IN CONC
902	665974.8407	798715.3920	1253.51	TBM	CHISLED SQR IN CONC
903	666619.8241	798804.8773	1257.83	TBM	CHISLED SQR IN CONC HW
904	667278.0315	801084.0418	1434.14	TBM	CHISLED SQR IN CONC
999	665045.5734	799347.1987	1288.90	BM	NGS 2ND ORDER BM R 51 PID GF0482

*Note - Rebar and Cap - Standard - 5/8" Rebar with 2" Aluminum Cap stamped *(standard markings common to all caps), or as indicated (other markings indicated in the point description of the individual point).
ALL DISTANCES ARE GROUND.
USE CAF = 1.0 FOR STAKEOUT FOR THIS PROJECT.
A PROJECT CAF OF XXXXX HAS BEEN USED TO COMPUTE THE ABOVE GROUND COORDINATES.
THIS CAF IS INTENDED FOR USE WITHIN THE PROJECT LIMITS.
GRID DISTANCE = GROUND DISTANCE X CAF.
GRID COORDINATES ARE STORED UNDER FILE NAME. s090423GI.CTL
HORIZONTAL DATUM: NAD 83 (1997)
VERTICAL DATUM: NAVD 88 POSITIONAL ACCURACY THIRD ORDER, UNLESS SPECIFIED OTHERWISE AT A SPECIFIC POINT.

REFERENCE POINTS (1500 SERIES) ARE TO BE USED TO ESTABLISH CONTROL IF THE PRIMARY CONTROL POINTS LISTED ABOVE HAVE BEEN DESTROYED.
REFERENCE POINTS ARE NOT TO BE USED FOR VERTICAL CONTROL

BASIS OF BEARING:
ARKANSAS STATE PLANE GRID BEARINGS - 0301-NORTH ZONE
DETERMINED FROM GPS CONTROL POINTS: 440204 - 440204A
CONVERGENCE ANGLE: 0-99-99.9 LEFT/RIGHT AT LAT N 36-09-03.80 LON W093-44-25.21
GRID AZIMUTH = ASTRONOMICAL AZIMUTH - CONVERGENCE ANGLE.

CO RD 8530

POINT NO.	STATION	NORTHING	EASTING
8017	198+63.34	666206.5330	798584.7378
8018	198+98.59	666206.3959	798549.4933
8020	199+87.06	666186.9063	798463.9215
8021	199+91.82	666184.8623	798459.6245
8023	201+33.87	666172.2631	798321.0828
8024	202+00.00	666189.4303	798257.2184
8025	202+50.00	666205.5782	798209.8978

HWY. 23

POINT NO.	STATION	NORTHING	EASTING
8000	100+00.00	664985.8023	799297.3688
8001	105+67.22	665412.7552	798923.9398
8003	107+20.75	665540.9236	798840.3432
8004	112+03.12	665977.9073	798636.0745
8006	119+27.97	666633.3853	798787.4146
8007	119+39.69	666640.7524	798796.5303
8009	123+16.87	666797.3594	799135.4557
8010	125+13.72	666833.7596	799328.9115
8012	126+83.42	666890.3631	799488.1750
8013	128+10.85	666951.1180	799600.1871
8015	131+80.78	667031.7597	799956.4795
8016	135+30.05	667013.6704	800305.2782

PARKING ROAD

POINT NO.	STATION	NORTHING	EASTING
8026	300+00.00	666170.1172	798416.6956
8027	302+80.00	665903.5054	7498502.2417

TRAIL CONNECTOR

POINT NO.	STATION	NORTHING	EASTING
8035	500+00.00	665917.4320	798529.2797
8037	500+25.67	665925.2745	798553.7215
8039	500+61.14	665922.3868	798588.1618
8041	500+82.15	665912.7282	798606.8148
8043	501+21.51	665911.1881	798644.9048
8045	502+16.78	665948.0199	798732.7614

CANOE ACCESS

POINT NO.	STATION	NORTHING	EASTING
8028	400+00.00	665909.0986	798468.9405
8029	400+17.62	665898.4118	798457.8460
8031	400+91.34	665827.5869	798432.3552
8033	401+21.62	665797.3273	798431.2100

6/18/2021
6/18/2021
mh39735 R090523SURVCTRL

HWY. 23
SURVEY CONTROL DETAILS

DATE REVISED	DATE REVISED	FED.RD. DIST.NO.	STATE	JOB NO.	SHEET NO.	TOTAL SHEETS
01/03/24		6	ARK.	090523	32	103
		SURVEY CONTROL DETAILS				

STATE OF ARKANSAS
LICENSED PROFESSIONAL ENGINEER
No. 11425
TRINITY D. SMITH

01-03-2024

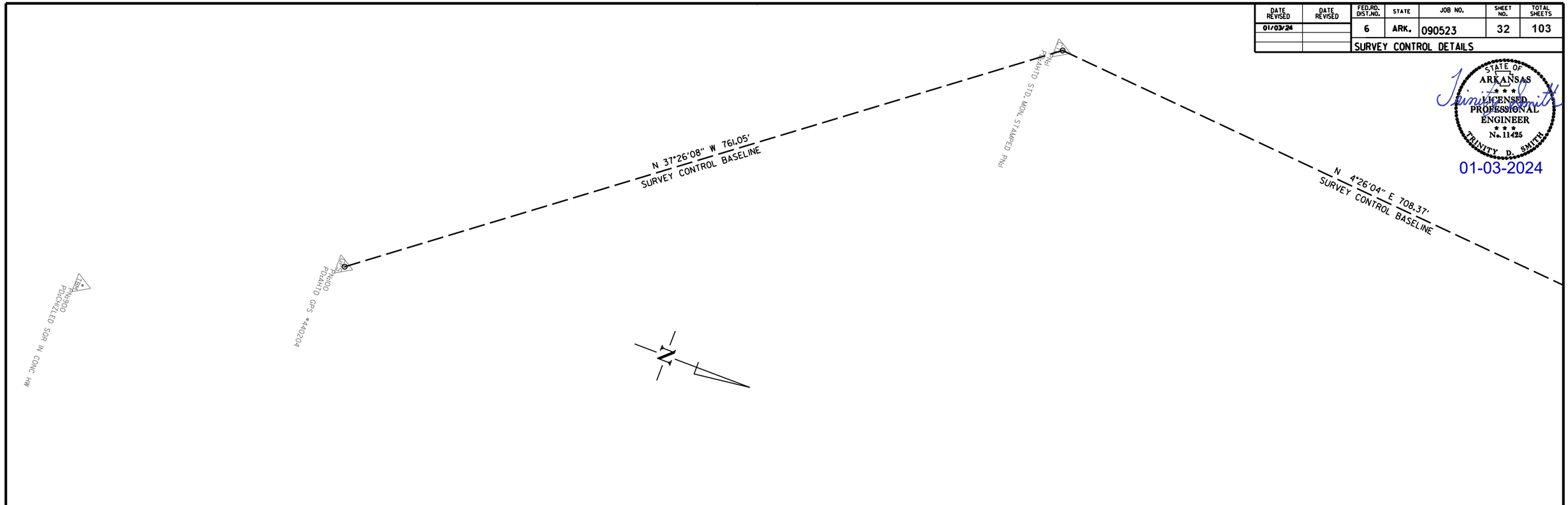

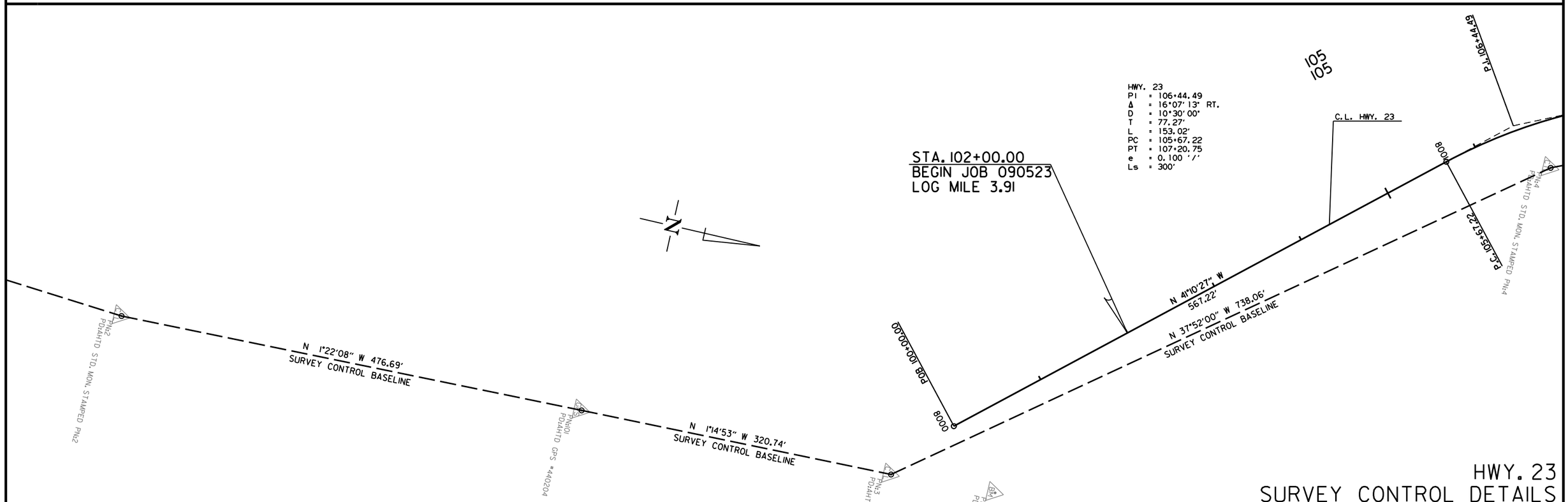

HWY. 23
SURVEY CONTROL DETAILS

mh39735 6/18/2021
R090523.DGN

DATE REVISED	DATE REVISED	FED.RD. DIST.NO.	STATE	JOB NO.	SHEET NO.	TOTAL SHEETS
		6	ARK.	090523	33	103
		SURVEY CONTROL DETAILS				

STATE OF ARKANSAS
LICENSED PROFESSIONAL ENGINEER
No. 11425
TRINITY D. SMITH

11-21-2023

C.L. CANOE ACCESS
P.I. 400+55.81
C.L. PARKING ROAD
C.L. CO. RD. 8530
P.I. 200+65.96
P.I. 199+91.82
P.I. 199+47.55
C.L. HWY. 23
S 64°42' W
280.00'
S 17°47'22" E
POB 500+00.00
P.C. 500+25.67
P.I. 500+44.38
P.I. 500+61.14
POB 198+87.06
POB 198+63.34
P.C. 199+98.59
S 89°46'37" W 35.24'
N 19°44'44" E 398.77'
SURVEY CONTROL BASELINE
N 51°03'20" E
111.72'
P.I. 121+32.20
N 63°30'45" E 569.65'
SURVEY CONTROL BASELINE
P.I. 123+16.87
N 79°20'38" E
196.85'
P.C. 125+13.72
P.I. 126+83.42
N 72°11'35" E 662.67' SURVEY
N 61°31'29" E
127.43'
P.I. 125+99.26
STA. 119+33.83
END JOB 090523

PI = 116+30.28
Δ = 76°06'34" RT.
D = 10°30'00"
T = 427.17'
L = 724.85'
PC = 112+03.12
PT = 119+27.97
e = 0.100'/'
Ls = 300'

HWY. 23
PI = 121+32.20
Δ = 28°17'18" RT.
D = 7°30'00"
T = 192.52'
L = 377.18'
PC = 119+39.69
PT = 123+16.87
e = 0.092'/'
Ls = 300'

P.I. 40°03'42" W 17.62'
S 39°01'42" W 30.28'
S 2°10'03" W
POE 401+21.62
P.T. 400+91.34
P.C. 400+17.62
POB 400+00.00
S 27°27'28" E 25.61'
S 62°32'32" W 25.10'
P.C. 500+82.15
POE 302+80.00
P.I. 501+03.19
P.I. 501+21.51
S 61°15'19" W 95.26'
P.C. 112+03.12
POE 502+16.78
N 25°03'14" W 482.37'
N 24°15'14" W 760.21'
SURVEY CONTROL BASELINE
P.I. 107+20.75
P.T. 119+27.97
P.C. 119+39.69

PNW05 PDBSPIKE
PNW06 PDIAHTD STD. MON. STAMPED PN5
PNW06 PDIAHTD STD. MON. STAMPED PN6
TBPNW903 PDROHILLED SQR IN CONC HW
TBPNW902 PDCHILLED SQR IN CONC
PNW01 PDCHILLED SQR IN CONC
PNW04 PDIAHTD STD. MON. STAMPED PN4
PNW07 PDREBAR CAP 8SPIKE
PNW07 PDIAHTD STD. MON. STAMPED PN7

110 400 500 115 300 120 125

mh39735 6/18/2021
R090523.DGN

HWY. 23
SURVEY CONTROL DETAILS

DATE REVISED	DATE REVISED	FED.RD. DIST.NO.	STATE	JOB NO.	SHEET NO.	TOTAL SHEETS
		6	ARK.	090523	34	103
		SURVEY CONTROL DETAILS				

STATE OF ARKANSAS
LICENSED PROFESSIONAL ENGINEER
No. 11425
TRINITY D. SMITH

Jim Smith
11-21-2023

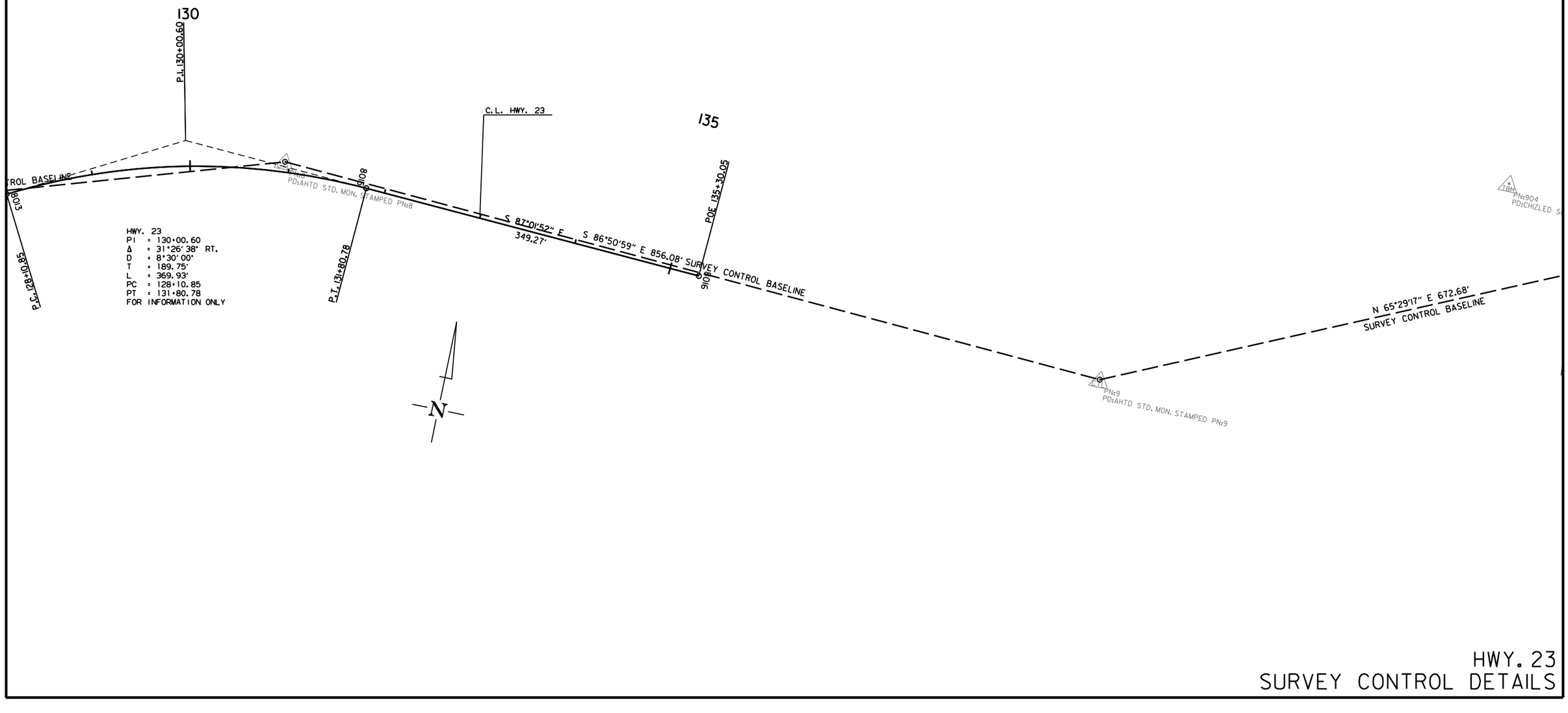

mh39735 6/18/2021
R090523.DGN

HWY. 23
SURVEY CONTROL DETAILS

DATE REVISED	DATE REVISED	FED.RD. DIST.NO.	STATE	JOB NO.	SHEET NO.	TOTAL SHEETS
		6	ARK.	090523	35	103
		SURVEY CONTROL DETAILS				

STATE OF ARKANSAS
LICENSED PROFESSIONAL ENGINEER
No. 11425
TRINITY D. SMITH

11-21-2023

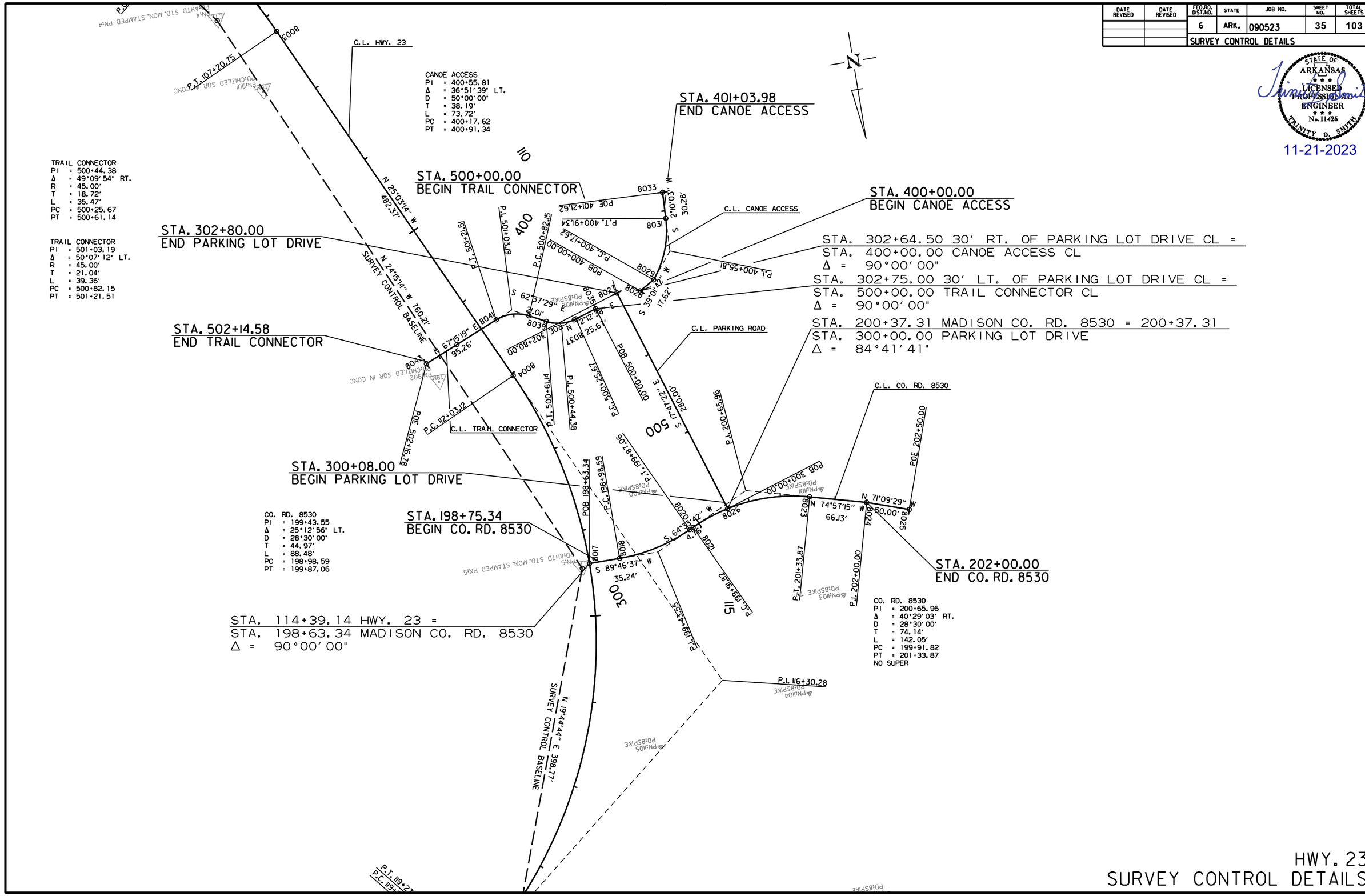

HWY. 23
SURVEY CONTROL DETAILS

mh39735 6/18/2021
R090523.DGN

DATE REVISED	DATE REVISED
01/03/24	

FED.RD. DIST.NO.	STATE	JOB NO.	SHEET NO.	TOTAL SHEETS
6	ARK.	090523	36	103

PLAN AND PROFILE SHEETS

STATE OF ARKANSAS
LICENSED PROFESSIONAL ENGINEER
No. 11425
TRINITY D. SMITH
01-03-2024

STA. 102+50 INSTALL
18" x 34' PIPE CULVERT
LT. SIDE DRAIN
CONSTRUCT APPROACH = 35 CU. YD.
UNCLASSIFIED EXCAVATION = 15 CU. YD.

DUMPED RIP RAP AND SYNTHETIC FIBER FABRIC

WIRE FENCE

STA.	STA.	SIDE	TYPE	LIN. FT.	16'-0" GATE EACH
102+95	107+58	LT.	D	463	1
107+58	109+53	LT.	D	195	

STA. 107+63.90 BR. END
BRIDGE NO. 07566
420'-0" CONTINUOUS W-BEAM UNIT
40'-0" CLEAR RDWY.
442'-2½" TOTAL BRIDGE LENGTH
STA. 111+86.10 BR. END

STA. 114+40 IN PLACE
DBL. 60" X 22' C.M. PIPE CULVERT
REMOVE AND INSTALL
DBL. 60" X 144' LT. SIDE DRAIN
CONST. TURNOUT ON LT. = 635 CU. YDS.

STA. 302+64.50 30' RT. OF PARKING LOT DRIVE CL =
STA. 400+00.00 CANOE ACCESS CL
Δ = 90°00' 00"

TYPE I SPECIAL APPROACH GUTTERS
STA. 107+27.40 TO
STA. 107+63.90

CANOE ACCESS
PI = 400+55.81
Δ = 36°51' 39" LT.
D = 50°00' 00"
T = 38.19'
L = 73.72'
PC = 400+17.62
PT = 400+91.34

BR. END STA. 111+86.10
ELEV. 1255.64

BR. END STA. 107+63.90
ELEV. 1255.91

TYPE C1 APPROACH SLAB
STA. 107+27.40 TO
STA. 107+63.90

TYPE I SPECIAL APPROACH GUTTERS
STA. 111+86.10 TO
STA. 112+22.60

TYPE C1 APPROACH SLAB
STA. 111+86.10 TO
STA. 112+22.60

WIRE FENCE (TYPE C)

STA.	STA.	SIDE	LIN. FT.
102+70	104+45	RT.	205
102+95	109+55	LT.	695

GUARDRAIL

STA.	STA.	SIDE	GUARDRAIL (TYPE A) LIN. FT.	GUARDRAIL TERMINAL (TYPE 2) EACH	THRIE BEAM GUARDRAIL TERMINAL EACH
107+70.15	107+63.90	LT.	75	1	1
105+45.15	107+63.90	RT.	150	1	1
111+86.10	112+79.85	RT.	75	1	1
111+86.10	114+04.85	LT.	150	1	1

HWY. 23
PI = 106+44.49
Δ = 16°07' 13" RT.
D = 10°30' 00"
T = 77.27'
L = 153.02'
PC = 105+67.22
PT = 107+20.75
e = 0.100'/'
Ls = 300'

STA. 107+76.47 - STA. 111+65.96: IN PLACE
BR. NO. 03583
390'-0" X 24'-0' CLEAR ROADWAY WIDTH
REMOVAL OF EXISTING BRIDGE STRUCTURE
(SITE NO. 1)= 1.00 LUMP SUM

STA. 114+39.14 HWY. 23 =
STA. 198+63.34 MADISON CO. RD. 8530
Δ = 90°00' 00"

HWY. 23
PI = 116+30.28
Δ = 76°06' 34" RT.
D = 10°30' 00"
T = 427.17'
L = 724.85'
PC = 112+03.12
PT = 119+27.97
e = 0.100'/'
Ls = 300'

REFER TO SURVEY CONTROL DETAIL SHEETS FOR HORIZONTAL AND VERTICAL CONTROL DATA.

STA. 102+00.00
BEGIN JOB 090523
LOG MILE 3.91

STA. 103+42.22 - BEGIN SUPERELEV.
STA. 106+42.22 - MAX. SUPERELEV. (0.100'/')
STA. 106+45.75 - MAX. SUPERELEV. (0.100'/')
STA. 108+85.75 - REVERSE CROWN (0.020'/')

STA. 110+38.12 - REVERSE CROWN (0.020'/')
STA. 112+78.12 - MAX. SUPERELEV. (0.100'/')
STA. 118+52.97 - MAX. SUPERELEV. (0.100'/')
STA. 120+33.83 - MATCH SUPERELEV. (0.078'/')

FLOODPLAIN LIMITS

VC= 520'
e= 4.20'
K= 80.50

-6.40%
-6.55%
LT. D.G. -11.27%
RT. D.G. -2.85%
-0.09%
RT. D.G. 1.21%
LT. D.G. 1.28%

NOTE:

FOR THE CONSTRUCTION OF TEMPORARY WORK RAMPS OR HAUL ROADS, THIS STREAM, STA. 110+00 TO STA. 111+25, IS CLASSIFIED AS AN PERENNIAL STREAM. THE TOP OF CHANNEL ELEVATION IS 1238 FT. MSL. REFER TO SECTION 110.06(c) OF THE 2014 STANDARD SPECIFICATIONS.

Q50 = 55600 CFS D.A. = 200 SQ. MI.

mn39735 7/11/2023
R090523.DGN

DATE REVISED	DATE REVISED	FED.RD. DIST.NO.	STATE	JOB NO.	SHEET NO.	TOTAL SHEETS
		6	ARK.	090523	37	103
		PLAN AND PROFILE SHEETS				

STATE OF ARKANSAS
LICENSED PROFESSIONAL ENGINEER
No. 11425
TRINITY D. SMITH

Trinity D. Smith
11-21-2023

DUMPED RIP RAP AND SYNTHETIC FIBER FABRIC

P.I. 116+30.28

117+35.00
110.00

PROPOSED ROW

118+70.00
100.00

DUMPED RIPRAP

120

CONST. LIMITS

P.I. 120+46.51
11.81

EXIST. R/W

P.I. 121+32.20

N 51°03'20" E

P.T. 119+27.97
P.C. 119+39.69

EXIST. R/W

STA. 119+34 CONSTRUCT
JUNCTION BOX (TYPE E) ON RT. H = 5'-2" WITH
36" X 42' R.C PIPE CULVERT W/FES
(CLASS III) (TYPE 3 BEDDING)
36" R.C. PIPE = 42 LIN. FT.
36" FES = 1EACH

STA. 119+33.83 IN PLACE
36" X 74" R.C. PIPE CULVERT
WITH HDWLS. LT. & RT.
REMOVE HDWLS. AND 25' LT.
EXTEND 34' LT. TO A COMPLETED LENGTH OF 84'
(CLASS III) (TYPE 3 BEDDING)
WITH FES LT.
Q50 = 51.6 CFS D.A. = 92.4 ACRES
36" R.C. PIPE = 48 LIN. FT.
36" FES = 1EACH

HWY. 23
PI = 116+30.28
Δ = 76°06'34" RT.
D = 10°30'00"
T = 427.17'
L = 724.85'
PC = 112+03.12
PT = 119+27.97
e = 0.100'/'
Ls = 300'

HWY. 23
PI = 121+32.20
Δ = 28°17'18" RT.
D = 7°30'00"
T = 192.52'
L = 377.18'
PC = 119+39.69
PT = 123+16.87
MATCH EXIST. SUPER.

33.83
100' TRANSITION
33.83

P.T. 123+16.87

HWY. 23 W

HWY. 23

REFER TO SURVEY CONTROL DETAIL SHEETS FOR HORIZONTAL AND VERTICAL CONTROL DATA.

STA. 110+38.12 - REVERSE CROWN (0.020'/')
STA. 112+78.12 - MAX. SUPERELEV. (0.100'/')
STA. 118+52.97 - MAX. SUPERELEV. (0.100'/')
STA. 120+33.83 - MATCH SUPERELEV. (0.078'/')

STA. 119+33.83
END JOB 090523

P.V.C. 116+25.00
1254.64'

VC= 300'
e= 1.23'
K= 91.46

P.V.T. 119+25.00
1259.28'

P.V.I. 119+33.83
1259.56'

-0.09%

3.19%

36" X 42' @ 8.93%

RT. D.G. 1.21%

P.V.I. 117+75.00
1254.50'

STA. 119+33.83
INLET EXIST. = 1253.44 RT.
OUTLET EXIST. = 1239.75 LT.
OUTLET = 1242.05 LT.

116+96.10 RT.
1251.18

LT. D.G. 1.31%

115+00.00 LT.
1233.65

119+00.00 LT.
1238.88

1310
1300
1290
1280
1270
1260
1250
1240
1230
1220

115+00
120+00
125+00
130+00

mh39735 7/11/2023
R090523.DGN

DATE REVISED	DATE REVISED	FED.RD. DIST.NO.	STATE	JOB NO.	SHEET NO.	TOTAL SHEETS
		6	ARK.	090523	38	103
		PLAN AND PROFILE SHEETS				

STATE OF ARKANSAS
LICENSED PROFESSIONAL ENGINEER
No. 11425
TRINITY D. SMITH
11-21-2023

CANOE ACCESS
PI = 400+55.81
Δ = 36°51'39" LT.
D = 50°00'00"
T = 38.19'
L = 73.72'
PC = 400+17.62
PT = 400+91.34

STA. 302+64.50 30' RT. OF PARKING LOT DRIVE CL =
STA. 400+00.00 CANOE ACCESS CL
Δ = 98°09'08"

STA. 200+37.31 MADISON CO. RD. 8530 = 200+37.31
STA. 300+00.00 PARKING LOT DRIVE
Δ = 84°44'21"

DUMPED RIPRAP

DUMPED RIP RAP AND SYNTHETIC FIBER FABRIC

CO. RD. 8530
PI = 199+43.55
Δ = 25°12'56" LT.
D = 28°30'00"
T = 44.97'
L = 88.48'
PC = 198+98.59
PT = 199+87.06

STA. 114+39.14 HWY. 23 =
STA. 198+63.34 MADISON CO. RD. 8530
Δ = 90°00'00"

CO. RD. 8530
PI = 200+65.96
Δ = 40°29'03" RT.
D = 28°30'00"
T = 74.14'
L = 142.05'
PC = 199+91.82
PT = 201+33.87
NO SUPER

STA. 114+40 IN PLACE
DBL. 60" X 22' C.M. PIPE CULVERT
REMOVE AND INSTALL
DBL. 60" X 144' RT. SIDE DRAIN
TURNOUT APPROACH ON LT. = 635 CU. YDS.

REFER TO SURVEY CONTROL DETAIL SHEETS FOR HORIZONTAL AND VERTICAL CONTROL DATA.

MADISON CO. RD. 8530

STA. 198+75.34
BEGIN CO. RD. 8530

STA. 202+00.00
END CO. RD. 8530

STA. 114+39.14
STA. 198+63.34 MADISON CO. RD. 8350
ELEV. = 1255.77'

P.V.I. 198+63.34
1255.77'
-10.00%

P.V.I. 198+85.42
1257.97'
-8.33%

P.V.C. 198+87.50
1258.17'

VC= 125'
e= -2.78'
K= 7.03

P.V.I. 199+50.00
1264.00'

P.V.C. 200+52.50
1255.35'
-8.43%

P.V.T. 200+12.50
1258.73'

VC= 145'
e= 3.51'
K= 7.48

P.V.I. 201+25.00
1249.24'

P.V.T. 201+97.50
1257.17'
10.94%

P.V.I. 202+00.00
1257.44'

P.V.I. 202+50.00
1263.23'
11.58%

STA. 199+84
INLET = 1235.99 RT.
OUTLET = 1232.37 LT.

STA. 199+84
EXIST. INLET = 1234.33 RT.
EXIST. OUTLET = 1232.68 LT.

1270 1265 1260 1255 1250 1245 1240 1235 1230 1225

195+00 196+00 197+00 198+00 199+00 200+00 201+00 202+00 203+00 204+00 205+00 206+00 207+00 208+00 209+00 210+00

mh39735 7/11/2023
R090523.DGN

DATE REVISED	DATE REVISED	FED.RD. DIST.NO.	STATE	JOB NO.	SHEET NO.	TOTAL SHEETS
		6	ARK.	090523	39	103
		PLAN AND PROFILE SHEETS				

STATE OF ARKANSAS
LICENSED PROFESSIONAL ENGINEER
No. 11425
TRINITY D. SMITH

11-21-2023

STA. 200+37.31 MADISON CO. RD. 8530 = 200+37.31
STA. 300+00.00 PARKING LOT DRIVE
Δ = 84°41'41"

STA. 302+64.50 30' RT. OF PARKING LOT DRIVE CL =
STA. 400+00.00 CANOE ACCESS CL
Δ = 56°49'05"

CANOE ACCESS
PI = 400+55.81
Δ = 36°51'39" LT.
D = 50°00'00"
T = 38.19'
L = 73.72'
PC = 400+17.62
PT = 400+91.34

DUMPED RIP RAP AND SYNTHETIC FIBER FABRIC

DUMPED RIPRAP

DUMPED RIPRAP

50' BUFFER

STA. 400+00.00
BEGIN CANOE ACCESS

STA. 401+03.98
END CANOE ACCESS

REFER TO SURVEY CONTROL DETAIL SHEETS FOR HORIZONTAL AND VERTICAL CONTROL DATA.

PARKING LOT DRIVE & CANOE ACCESS

STA. 300+08.00
BEGIN PARKING LOT DRIVE

STA. 302+80.00
END PARKING LOT DRIVE

STA. 200+37.31 MADISON CO. RD. 8530
STA. 300+00.00 PARKING LOT DRIVE
ELEV. = 1256.63'

P.V.I. 300+00.00 1256.63'
P.V.I. 300+10.04 1256.51'
P.V.I. 300+50.00 1256.08'
P.V.C. 300+12.50 1256.48'
P.V.C. 301+05.00 1247.40'
P.V.T. 300+87.50 1250.16'
P.V.T. 301+80.00 1241.10'
P.V.I. 301+42.50 1241.47'
P.V.I. 302+80.00 1240.10'
-1.25%
-1.07%
-1.00%
VC= 75'
e= -1.38'
K= 5.10
VC= 75'
e= 1.39'
K= 5.07
302+25.00 RT. 1233.90
302+80.00 RT. 1230.00
RT. D.G. -7.09%
LT. D.G. -2.13%
302+00.00 LT. 1231.40
302+80.00 LT. 1230.00

STA. 400+00.00
BEGIN CANOE ACCESS

STA. 302+64.50 PARKING LOT DRIVE
STA. 400+00.00 CANOE ACCESS
ELEV. = 1239.66'

STA. 401+03.98
END CANOE ACCESS

P.V.C. 400+00.00 1239.66'
P.V.I. 400+50.00 1235.00'
P.V.I. 401+03.98 1227.34'
P.V.T. 401+00.00 1227.91'
VC= 100'
e= -0.61'
K= 20.58
-9.32%
-14.18%
400+45.76 RT. 1230.00
RT. D.G. -15.87%
401+03.98 RT. 1220.76

1265 1260 1255 1250 1245 1240 1235 1230 1225 1220

295+00 296+00 297+00 298+00 299+00 300+00 301+00 302+00 303+00 304+00 400+00 401+00 402+00 403+00 404+00 405+00

mh39735 7/11/2023
R090523.DGN

DATE REVISED	DATE REVISED	FED.RD. DIST.NO.	STATE	JOB NO.	SHEET NO.	TOTAL SHEETS
		6	ARK.	090523	40	103
		PLAN AND PROFILE SHEETS				

STATE OF ARKANSAS
LICENSED PROFESSIONAL ENGINEER
No. 11425
TRINITY D. SMITH

11-21-2023

TRAIL CONNECTOR

POINT NAME	STATION	SYMBOL
POB	500+00.00	A
P.C.	500+25.67	B
P.I.	500+44.38	C
P.T.	500+61.14	D
P.C.	500+82.15	E
P.I.	501+03.19	F
P.T.	501+21.51	G
POE	502+16.78	H

STA. 500+28 INSTALL
DBL. 60" X 14' LT. SIDE DRAIN

TRAIL CONNECTOR
PI = 501+03.19
Δ = 50°07' 12" LT.
R = 45.00'
T = 21.04'
L = 39.36'
PC = 500+82.15
PT = 501+21.51

STA. 302+75.00 30' LT. OF PARKING LOT DRIVE CL =
STA. 500+00.00 TRAIL CONNECTOR CL
Δ = 90°00' 00"

TRAIL CONNECTOR
PI = 500+44.38
Δ = 49°09' 54" RT.
R = 45.00'
T = 18.72'
L = 35.47'
PC = 500+25.67
PT = 500+61.14

STA. 500+00.00
BEGIN TRAIL CONNECTOR

STA. 502+14.58
END TRAIL CONNECTOR

DUMPED RIPRAP

DUMPED RIP RAP AND
SYNTHETIC FIBER FABRIC

50' BUFFER

WAR EAGLE CREEK

5BRB STEEL POST

4BRB STEEL POST

EXIST. R/W

REFER TO SURVEY CONTROL DETAIL SHEETS FOR HORIZONTAL AND VERTICAL CONTROL DATA.

TRAIL CONNECTOR

STA. 302+75.00 PARKING LOT DRIVE
STA. 500+00.00 TRAIL CONNECTOR
ELEV. = 1239.55'

STA. 500+00.00
BEGIN TRAIL CONNECTOR

STA. 502+14.58
END TRAIL CONNECTOR

P.V.I. 500+00.00 1239.55'
P.V.I. 500+50.00 1238.55'
P.V.C. 500+87.86 1234.95'
P.V.T. 501+37.86 1233.43'
P.V.I. 501+70.00 1234.52'
P.V.I. 502+14.58 1235.01'
P.V.C. 500+25.00 1239.05'
P.V.T. 500+75.00 1236.18'
P.V.I. 501+12.86 1232.58'
P.V.C. 501+45.00 1233.67'
P.V.T. 501+95.00 1234.80'

VC= 50' e= -0.47' K= 6.67
VC= 50' e= 0.81' K= 3.88
VC= 50' e= -0.14' K= 21.82

-2.00%
+28
-5.00%
+10.00%
+4.40%
+1.11%

INLET = 1230.10 LT.
OUTLET= 1230.00 RT.

1265 1260 1255 1250 1245 1240 1235 1230 1225 1220

500+00 501+00 502+00 503+00

mh39735 7/11/2023
R090523.DGN

DATE REVISED	DATE REVISED	FED. RD. DIST. NO.	STATE	JOB NO.	SHEET NO.	TOTAL SHEETS
		6	ARK.	090523	41	103
		07566 -	LAYOUT	- 64452		

For R/W Data, see Rdwy. Plans.

Use Type 1 Special Approach Gutters and Type C1 Approach Slab at both ends of the bridge. See Dwg. No. 64475 and Std. Dwg. No. 55040C1, respectively.

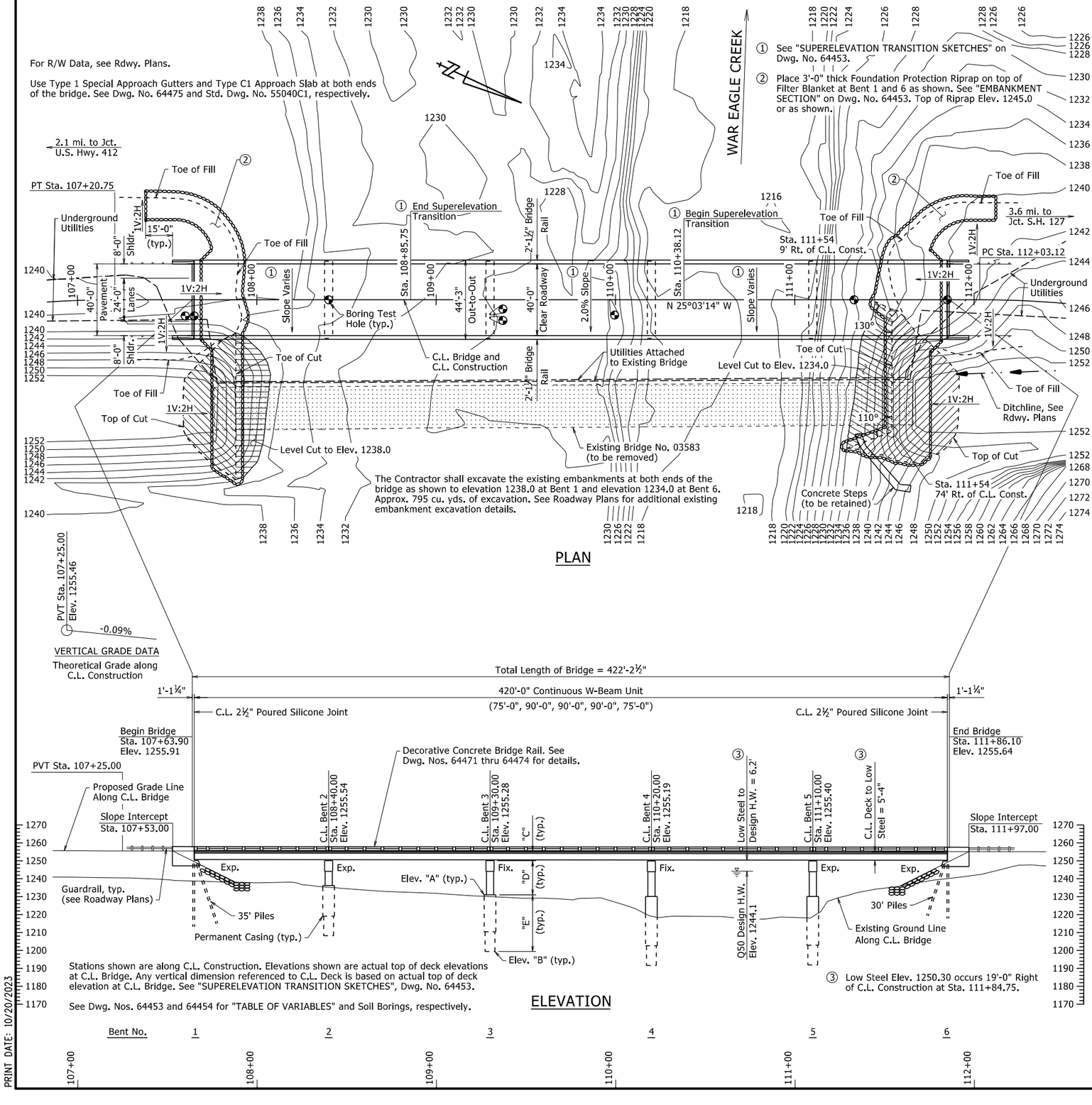

PLAN

ELEVATION

PRINT DATE: 10/20/2023

GENERAL NOTES

BENCHMARK: Vertical Control Data are shown on the Survey Control Data Sheets.

CONSTRUCTION SPECIFICATIONS: Arkansas State Highway and Transportation Department Standard Specifications for Highway Construction (2014 edition) with applicable Supplemental Specifications and Special Provisions. Section and Subsection refer to the Standard Construction Specifications unless otherwise noted in the Plans.

DESIGN SPECIFICATIONS: AASHTO LRFD Bridge Design Specifications, Eighth Edition (2017).

LIVE LOADING: HL-93

SEISMIC ZONE: 1 S_{D1}: 0.099 SITE CLASS: C SEISMIC OPERATIONAL CLASSIFICATION: Other

MATERIALS AND STRENGTHS:

Class S(AE) Concrete (superstructure)	f'c = 4,000 psi
Class S Concrete (substructure)	f'c = 3,500 psi
Reinforcing Steel (AASHTO M 31 or M 322, Type A)	fy = 60,000 psi
Structural Steel (ASTM A709, Gr. 50)	Fy = 50,000 psi
Structural Steel (ASTM A709, Gr. 50W)	Fy = 50,000 psi
Structural Steel (ASTM A709, Gr. 36)	Fy = 36,000 psi

BORING LOGS: Boring logs may be obtained from the Construction Contract Development Section of the Program Management Division.

STEEL PILING: All end bent piling shall be HP 14x73 (Gr. 50) and shall be driven with an approved air, steam, or diesel hammer to a minimum safe bearing capacity of 130 tons per pile and into the material designated as Limestone on the boring legend. Minimum penetration shall be 10' below natural ground. Piling shall be driven after embankment to bottom of cap is in place. Lengths of piling shown are for estimating quantities and for use in determining payment for cut-off and build-up in accordance with Section 805. Actual pile lengths are to be determined in the field. The Contractor shall use approved steel H-Pile driving points on all piles.

DRILLED SHAFTS: Drilled shafts at Bents 2 thru 5 shall be constructed in accordance with Special Provision Job No. 090523 "Drilled Shaft Foundations". Drilled shafts shall be socketed into material designated as Limestone on the boring legend and to the minimum rock penetrations and tip elevations shown in the plans. No adjustment to plan tip elevations shall be made without prior approval from the Engineer. Temporary casings may be required.

NONDESTRUCTIVE TESTING: Crosshole Sonic Logging (CSL) shall be performed on each drilled shaft. Testing shall be performed in accordance with Special Provision Job No. 090523 "Nondestructive Testing of Drilled Shafts".

PAINTING: The following weathering steel surfaces shall be painted as specified in Subsection 807:

All steel surfaces within eight feet of bridge deck expansion joints, including diaphragms or cross-frames, connection bolts and bearings.

All steel surfaces exposed to the outside face of the bridge, including outside faces & bottom of the exterior beams or girders, splice plates and bolts, stiffeners, drip plates and bearings.

ASTM F3125, Grade A325 Type 3 bolts shall be used with these painted zones and shall be painted.

Galvanized members, the expansion device, and surfaces in contact with concrete shall not be painted. The color of paint shall be Brown equal or close to Fed. Std. 595 B, Color Chip No. 30070 and as approved by the Engineer. The finish system may be applied in the shop. Any damage to the paint system occurring during transport or installation shall be corrected according to the manufacturer's recommendations at no cost to the Department.

BRIDGE DECK: The concrete bridge deck shall be given a tine finish as specified for final finishing in Subsection 802.19 for Class 5 Tined Bridge Roadway Surface Finish.

STAINING CONCRETE SURFACES: A concrete penetrating stain shall be applied to bridge surfaces as specified in Special Provision Job No. 090523 "Staining Concrete Surfaces". The concrete penetrating stain shall not be applied on surfaces where Class 2 Protective Surface Treatment is applied. The color of the stain shall be specified in Special Provision Job No. 090523 "Staining Concrete Surfaces".

PROTECTIVE SURFACE TREATMENT: Class 2 Protective Surface Treatment shall be applied to the roadway surface only. It SHALL NOT be applied to the wings, railings, or curbs.

DETAIL DRAWINGS:	DRAWING NO(S).
End Bents	64455 - 64458, 64462 - 64465
Intermediate Bents	64459 - 64461
Elastomeric Bearings	64466
420'-0" Continuous W-Beam Unit	64467 - 64470
Poured Silicone Joints	55008
General Notes for Steel Bridge Structures	55006
Details for Steel Bridge Structures	55007
Steel H-Piles	55020

EXISTING BRIDGE: Existing Bridge No. 03583 (Log Mile 4.08) is 25.2' wide (24.0' clear roadway) and 392.0' long and consists of steel I-Beam spans (6 spans total) supported by concrete bents on spread footings. The existing bridge is located approximately 60' upstream from the proposed new bridge. Plans of the existing structure, if available, may be obtained upon request to the Construction Contract Development Section of the Program Management Division.

REMOVAL AND SALVAGE: After the new bridge is open to traffic, the Contractor shall remove existing Bridge No. 03583, including dumped riprap, in accordance with Section 205. Removal of dumped riprap will not be paid for directly but shall be considered subsidiary to the item "Removal of Existing Bridge Structure (Site No.)". All material from the existing bridge shall become property of the Contractor.

MAINTENANCE OF TRAFFIC: See Roadway Plans.

STATE OF ARKANSAS
CHARLES R. ELLIS
LICENSED PROFESSIONAL ENGINEER
No. 9235
11/6/23
BRIDGE ENGINEER

SHEET 1 OF 3
LAYOUT OF BRIDGE
HIGHWAY 23 OVER WAR EAGLE CREEK
WAR EAGLE CREEK STR. & APPRS. (S)
MADISON COUNTY

ROUTE 23 SEC. 9

ARKANSAS STATE HIGHWAY COMMISSION
LITTLE ROCK, ARK.

DRAWN BY: WAC DATE: 1/5/2020 FILENAME: b090523_l1.dgn
CHECKED BY: NAC DATE: 2/23/2021 SCALE: 1" = 30'
DESIGNED BY: WAC DATE: 8/2020

BRIDGE NO. 07566 DRAWING NO. 64452

DATE REVISED	DATE REVISED	FED. RD. DIST. NO.	STATE	JOB NO.	SHEET NO.	TOTAL SHEETS
		6	ARK.	090523	42	103
				07566 - LAYOUT - 64453		

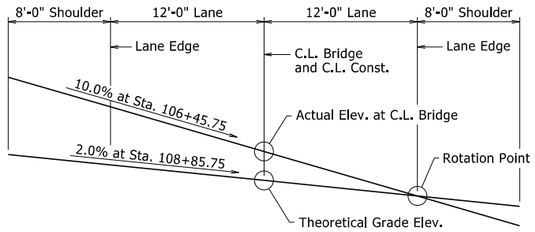

STA. 106+45.75 TO STA. 108+85.75

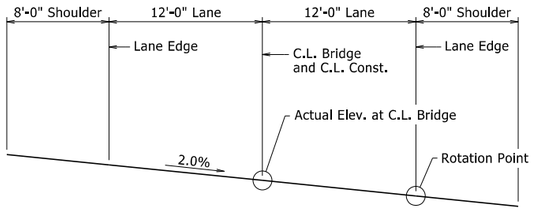

STA. 108+85.75 TO STA. 110+38.12

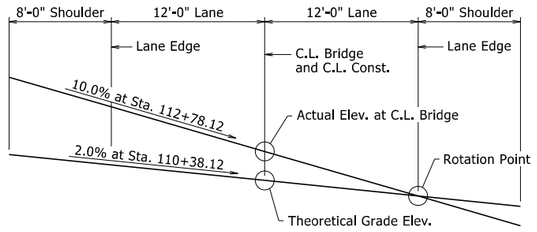

STA. 110+38.12 TO STA. 112+78.12

SUPERELEVATION TRANSITION SKETCHES

Looking Ahead
No Scale

See Roadway Plans for superelevation beyond limits shown.

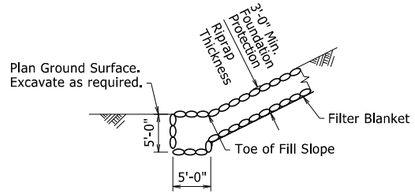

EMBANKMENT SECTION

No Scale (Bent 1 and 6)

HYDRAULIC DATA

FLOOD DESCRIPTION	FREQUENCY	DISCHARGE	①NATURAL WATER SURFACE ELEVATION	WATER SURFACE ELEV. WITH BACKWATER
	YEARS	CFS	FEET	FEET
Design	50	55,600	1,244.5	1,244.9
Base	100	68,700	1,246.7	1,247.4
Extreme	500	103,000	1,251.1	1,252.8
Overtopping	>500	-	-	-

① Unconstricted water surface elevation without structure or roadway approaches.

Q100 backwater elevation for existing structure = 1,247.5 ft.
Proposed Low Bridge Chord Elevation = 1,250.30 ft.
Drainage Area = 200 square miles
Historical H.W. Elevation = 1,245.8 ft.

TABLE OF VARIABLES

Bent No.	Top of Shaft Elevation	Bottom of Shaft Elevation	Top of Deck at C.L. Bridge and C.L. Bent to Low Side Top of Cap	Bent Height	Shaft Length
	"A"	"B"	"C"	"D"	"E"
2	1236.00	1207.50	5'-7 3/16"	13'-10 7/16"	28'-6"
3	1231.00	1199.00	5'-2 7/8"	18'-11 1/2"	32'-0"
4	1230.00	1192.00	5'-2 7/8"	19'-10 7/16"	38'-0"
5	1230.00	1191.5	5'-10 13/16"	19'-6 5/16"	38'-6"

STATE OF ARKANSAS
LICENSED PROFESSIONAL ENGINEER
No. 9235
11/6/23
CHARLES R. ELLIS

BRIDGE ENGINEER

SHEET 2 OF 3
LAYOUT OF BRIDGE
HIGHWAY 23 OVER WAR EAGLE CREEK
WAR EAGLE CREEK STR. & APPRS. (S)
MADISON COUNTY

ROUTE 23 SEC. 9

ARKANSAS STATE HIGHWAY COMMISSION
LITTLE ROCK, ARK.

DRAWN BY: WAC DATE: 1/5/2020 FILENAME: b090523_l1.dgn
CHECKED BY: NAC DATE: 2/23/2021 SCALE: 1" = 30'
DESIGNED BY: WAC DATE: 8/2020

BRIDGE NO. 07566 DRAWING NO. 64453

PRINT DATE: 10/20/2023

DATE REVISED	DATE REVISED	FED. RD. DIST. NO.	STATE	JOB NO.	SHEET NO.	TOTAL SHEETS
		6	ARK.	090523	43	103
		07566 -	LAYOUT	- 64454		

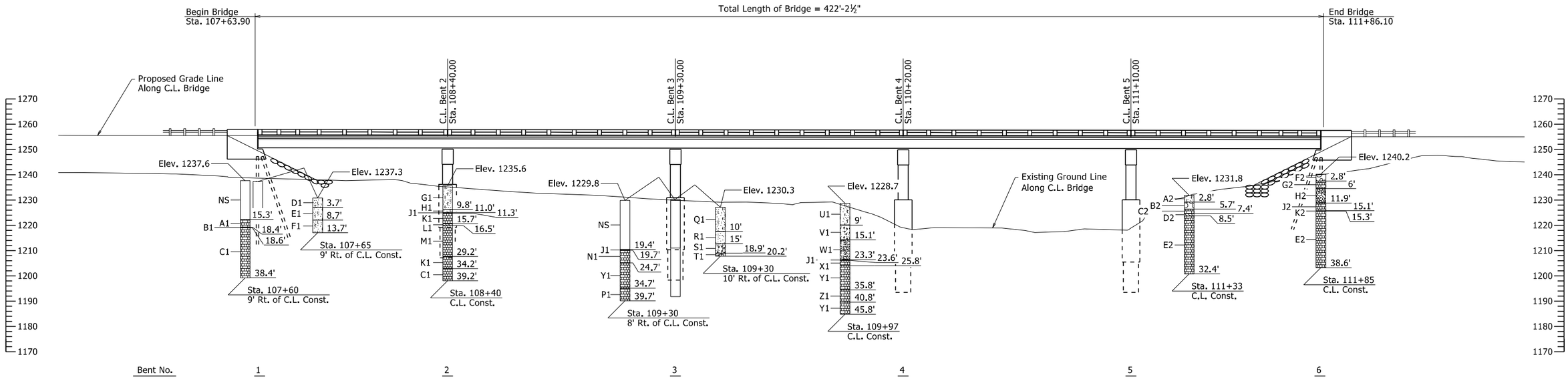

SOIL BORING ELEVATION



BORING LEGEND

NS-Not Sampled
A1-LIMESTONE - Unweathered, Moderately Hard, Gray
B1-Soil Filled Cavity (Clay with Sand) (18.4' to 18.6')
C1-LIMESTONE WITH OCCASIONAL SHALE SEAMS - Unweathered, Moderately Hard, Gray to Reddish Gray
D1-Silty Sand with Some Gravel and Cobbles
E1-Moist, Loose, Brown Silty Sand with Trace Gravel
F1-Moist, Loose, Brown Silty Sand
G1-Moist, Loose, Brown Silty Sand
H1-Moist, Very Dense, Brown Silty Sand
J1-LIMESTONE
K1-LIMESTONE - Unweathered, Moderately Hard, Gray to Reddish Gray
L1-Soil Filled Cavity (Clay with Sand) (15.7' to 16.5')
M1-LIMESTONE WITH OCCASIONAL SHALE PARTINGS - Unweathered, Moderately Hard, Gray to Reddish Gray
N1-LIMESTONE WITH OCCASIONAL SHALE SEAMS - Slightly Weathered, Moderately Hard, Gray and Reddish Gray
P1-LIMESTONE WITH FREQUENT SHALE SEAMS - Unweathered, Moderately Hard, Gray and Reddish Gray
Q1-Moist, Loose, Brown Silty Sand with Some Organic Matter
R1-Wet, Medium Dense, Brown Sand with Some Clay and Some Gravel
S1-Wet, Medium Dense, Brown Silty Sand with Gravel
T1-Gravel and Cobbles
U1-Moist, Very Loose, Brown Silty Sand with Organic Matter
V1-Moist, Medium Dense, Brown Sand with Gravel
W1-Moist, Medium Dense, Brown Sand with Gravel and Cobbles
X1-LIMESTONE - Unweathered, Moderately Hard, Gray
Y1-LIMESTONE WITH OCCASIONAL SHALE SEAMS - Unweathered, Moderately Hard, Gray
Z1-LIMESTONE WITH OCCASIONAL SHALE SEAMS - Unweathered, Moderately Hard, Gray and Reddish Gray
A2-Silty Sand
B2-Very Dense, Cobbles and Boulders
C2-LIMESTONE - Slightly Weathered, Moderately Hard, Gray to Reddish Gray
D2-Clay with Sand
E2-LIMESTONE WITH OCCASIONAL SHALE PARTINGS AND SEAMS - Unweathered, Moderately Hard, Gray to Reddish Gray
F2-Cobbles and Boulders
G2-LIMESTONE - Slightly Weathered, Moderately Hard, Gray
H2-Clay with Gravel and Cobbles
J2-LIMESTONE WITH OCCASIONAL SHALE PARTINGS AND SEAMS - Slightly Weathered, Moderately Hard, Occasional Vugs, Gray to Reddish Gray
K2-Cavity (15.1' - 15.3')

Soil cavities were encountered in the borings and may be encountered in greater amounts at other locations within the project area.

"N" VALUES

Sta. 107+65 - 9' Rt. of C.L. Const.
4.2- 5.2,N=8
9.2- 10.2,N=8
13.7- 13.7,N=20(0")

Sta. 108+40 - C.L. Const.
5.3- 6.3,N=6
10.3- 11.0,N=24(8")

Sta. 109+30 - 10' Rt. of C.L. Const.
5.5- 6.5,N=5
10.5- 11.5,N=22
15.5- 16.5,N=13
20- 20.2,N=25(2")

Sta. 109+97 - C.L. Const.
5.6- 6.6,N=4
10.6- 11.6,N=12
15.6- 16.6,N=11
20.6- 21.6,N=18
23.6- 23.6,N=10(0")

Sta. 111+33 - C.L. Const.
2.8- 2.8,N=10(0")

STATE OF ARKANSAS
LICENSED PROFESSIONAL ENGINEER
No. 9235
CHARLES R. ELLIS
11/6/23
BRIDGE ENGINEER

SHEET 3 OF 3
LAYOUT OF BRIDGE
HIGHWAY 23 OVER WAR EAGLE CREEK
WAR EAGLE CREEK STR. & APPRS. (S)
MADISON COUNTY

ROUTE 23 SEC. 9
ARKANSAS STATE HIGHWAY COMMISSION
LITTLE ROCK, ARK.

DRAWN BY: WAC DATE: 1/5/2020 FILENAME: b090523_l1.dgn
CHECKED BY: NAC DATE: 2/23/2021 SCALE: 1" = 30'
DESIGNED BY: WAC DATE: 8/2020
BRIDGE NO. 07566 DRAWING NO. 64454

PRINT DATE: 10/20/2023

DATE REVISED	DATE REVISED	FED. ROAD DIST. NO.	STATE	JOB NO.	SHEET NO.	TOTAL SHEETS
		6	ARK.	090523	44	103
				07566 - BENT 1 - 64455		

① Includes ¾" allowance for architectural finish on each side, 2'-0" nominal width. See Dwg. No. 64474.

② Pedestals shall be cast level at the elevation shown.

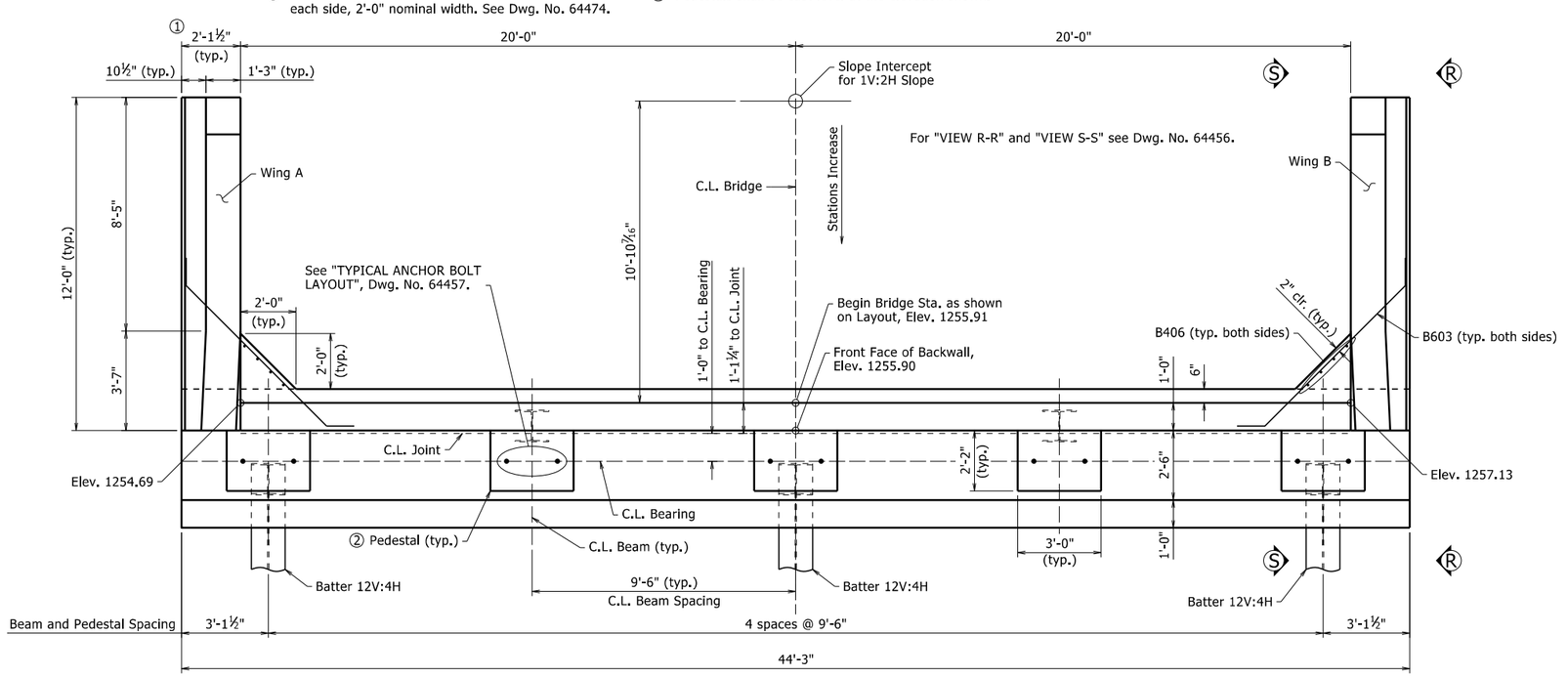

PLAN VIEW

⅜" = 1'-0"

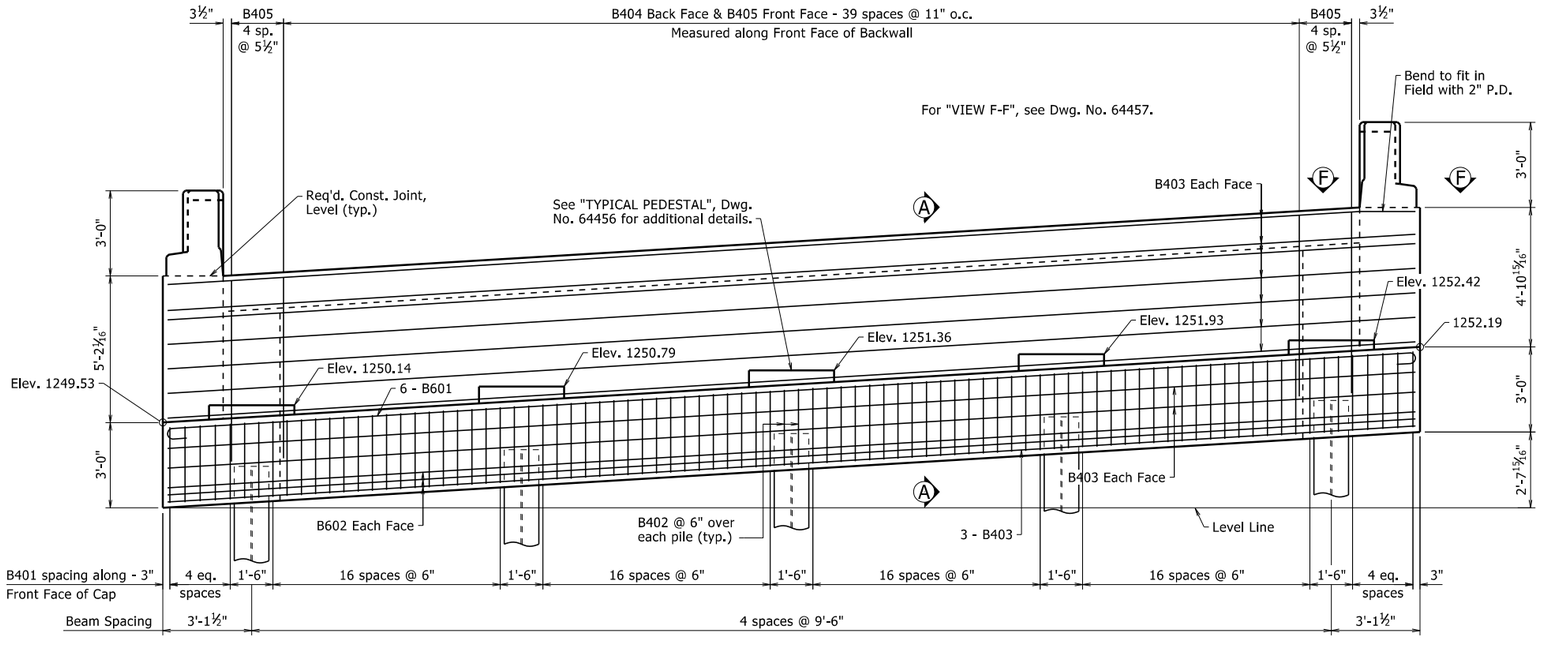

ELEVATION VIEW

Looking Back

⅜" = 1'-0"

General Notes:

Class 2 Protective Surface Treatment shall be applied to the top of backwall only. Class 2 Protective Surface Treatment SHALL NOT be applied to any portion of the Railings (including Rail, Post, and Curb) and Wings.

The Backwall above the required construction joint shall not be poured until the beams are in place. Backwall may be placed prior to placing the adjacent concrete deck only if the optional backwall construction joint is used. See St. Dwg. No. 55008, "Expansion Device Installation at End Bents", for additional information.

Structural Steel in end bents shall be ASTM A709, Gr. 50W and shall be paid for as "Structural Steel in Beam Spans (A709, Gr. 50W)".

For details of steel piling, see Std. Dwg. No. 55020. All piling shall be Gr. 50.

See Std. Dwg. No. 55006 for additional notes.

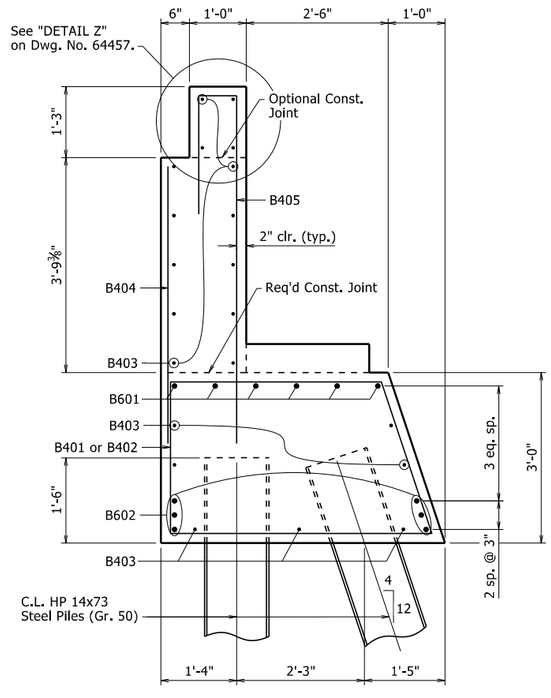

SECTION A-A

¾" = 1'-0"

STATE OF ARKANSAS
LICENSED PROFESSIONAL ENGINEER
No. 9235
11/6/23
CHARLES R. ELLIS

BRIDGE ENGINEER

SHEET 1 OF 4
DETAILS OF BENT 1

ROUTE SEC.

ARKANSAS STATE HIGHWAY COMMISSION

LITTLE ROCK, ARK.

DRAWN BY:	WAC	DATE:	7/6/2021	FILENAME:	b090523_b1.dgn
CHECKED BY:	DBS	DATE:	1/9/2023	SCALE:	As Shown
DESIGNED BY:	WAC	DATE:	4/2021		

BRIDGE NO. 07566 DRAWING NO. 64455

PRINT DATE: 10/20/2023

DATE REVISED	DATE REVISED	FED. RD. DIST. NO.	STATE	JOB NO.	SHEET NO.	TOTAL SHEETS
		6	ARK.	090523	45	103
		07566 -	BENT 1	- 64456		

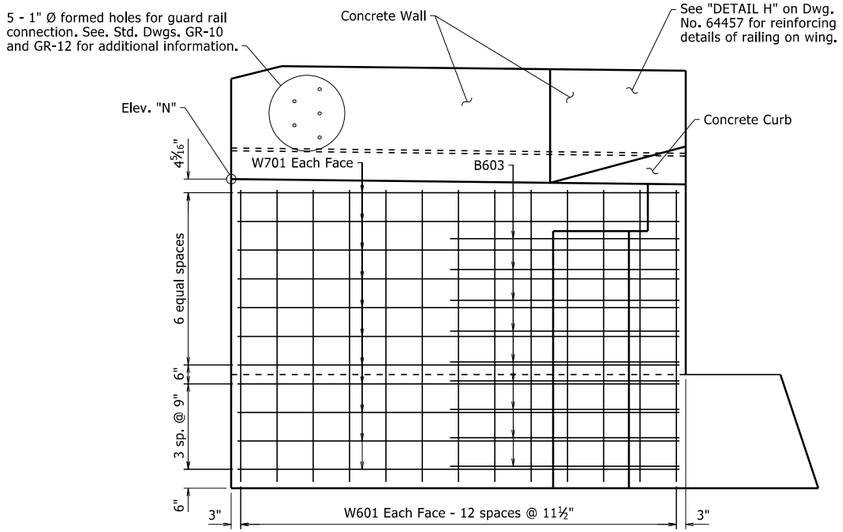

VIEW S-S

Wing B Shown
½" = 1'-0"

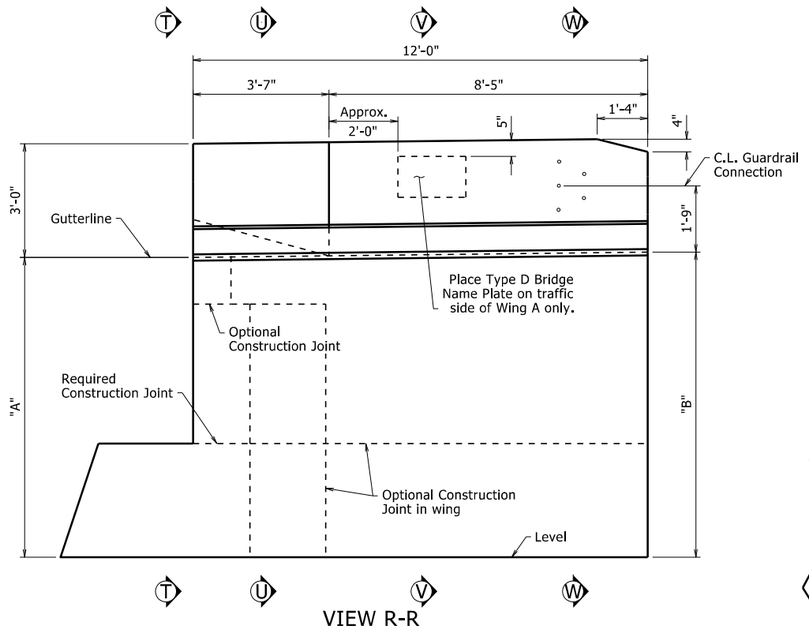

VIEW R-R

Wing B Shown
½" = 1'-0"

For "SECTION U-U", "SECTION V-V" and "SECTION W-W" see Dwg. No. 64458.

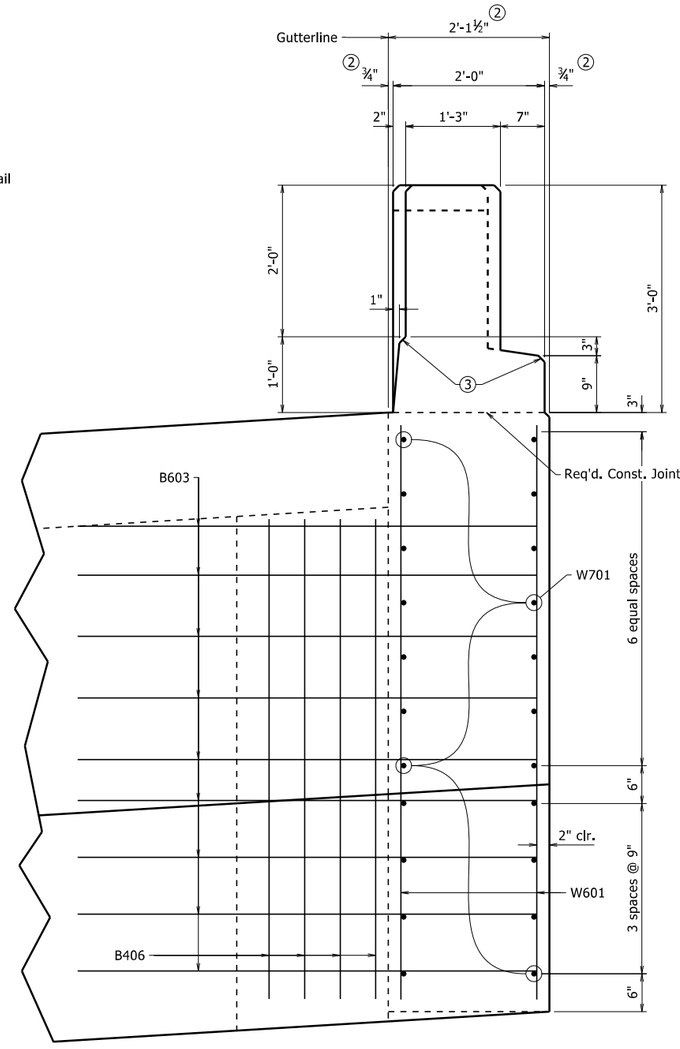

VIEW T-T ①

1" = 1'-0"

TABLE OF VARIABLES

Wing	Variable		
	"A"	"B"	"N"
Wing A	8'-2 1/16"	8'-1 13/16"	1254.68
Wing B	7'-10 15/16"	8'-0 5/8"	1257.24

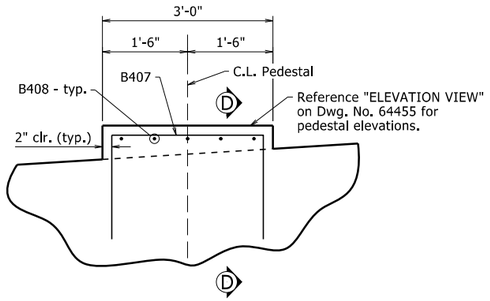

TYPICAL PEDESTAL

¾" = 1'-0"

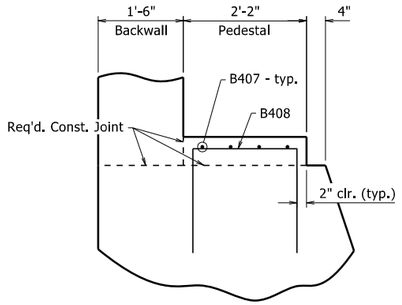

SECTION D-D

¾" = 1'-0"

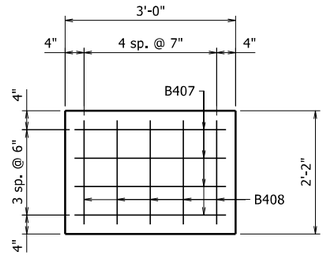

PEDESTAL PLAN

¾" = 1'-0"

① Unless noted otherwise, Railing component (includes Rail, Post, Curb, and Wall) dimensions do not include additional allowance for architectural finish. See Dwg. No. 64474 for details of architectural finish.

② Dimension includes ¾" allowance for Fieldstone Finish. See Dwg. No. 64474 for details of architectural finish on wing railing.

③ All exposed corners for the Railing components (Rail, Post, Curb, and Wall) shall be chamfered 1" unless otherwise noted.

STATE OF ARKANSAS
LICENSED PROFESSIONAL ENGINEER
No. 9235
11/6/23
CHARLES R. ELLIS

BRIDGE ENGINEER

SHEET 2 OF 4
DETAILS OF BENT 1

ROUTE SEC.

ARKANSAS STATE HIGHWAY COMMISSION

LITTLE ROCK, ARK.

DRAWN BY: WAC DATE: 7/6/2021 FILENAME: b090523_b1.dgn
CHECKED BY: DBS DATE: 1/9/2023 SCALE: As Shown
DESIGNED BY: WAC DATE: 4/2021

BRIDGE NO. 07566 DRAWING NO. 64456

PRINT DATE: 10/20/2023

DATE REVISED	DATE REVISED	FED. RD. DIST. NO.	STATE	JOB NO.	SHEET NO.	TOTAL SHEETS
		6	ARK.	090523	46	103
				07566 - BENT 1 - 64457		

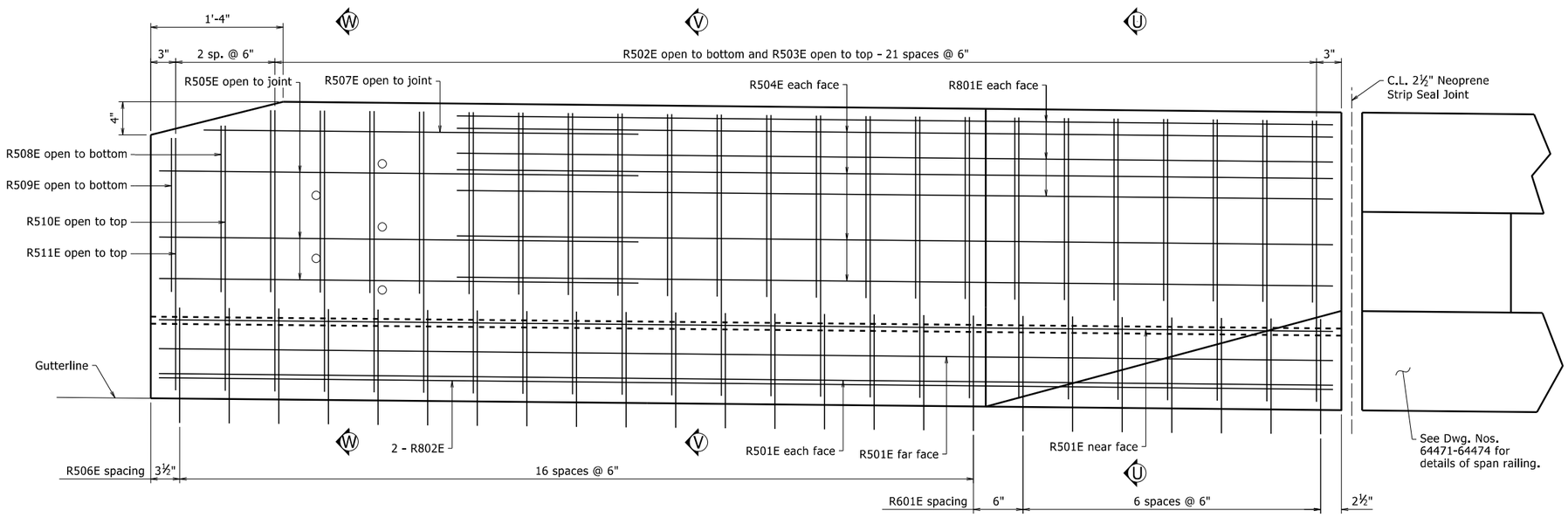

For "SECTION U-U", SECTION V-V", and "SECTION W-W", see Dwg. No. 64458.

DETAIL H

1½" = 1'-0"

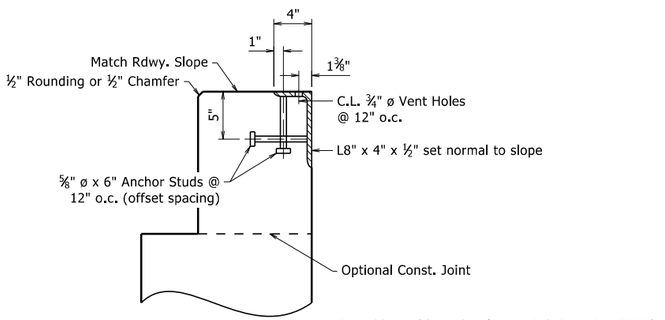

DETAIL Z

No Scale

For additional joint details, see Std. Dwg. No. 55008.

Concrete shall be hand packed under the joint armor in the backwall.

Transverse spacing between top anchor studs and vent holes shall be 6".

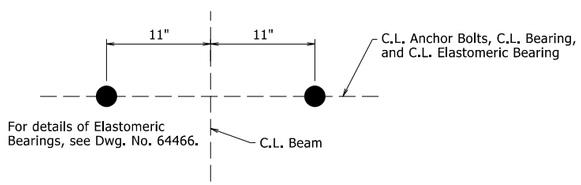

TYPICAL ANCHOR BOLT LAYOUT

No Scale

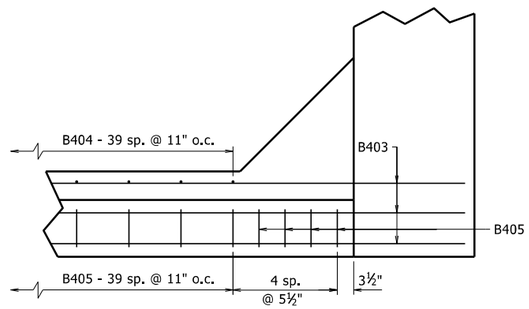

VIEW F-F

¾" = 1'-0"

STATE OF ARKANSAS
LICENSED PROFESSIONAL ENGINEER
No. 9235
11/6/23
CHARLES R. ELLIS

BRIDGE ENGINEER

SHEET 3 OF 4
DETAILS OF BENT 1

ROUTE SEC.

ARKANSAS STATE HIGHWAY COMMISSION

LITTLE ROCK, ARK.

DRAWN BY: WAC DATE: 7/6/2021
CHECKED BY: DBS DATE: 1/9/2023
DESIGNED BY: WAC DATE: 4/2021

FILENAME: b090523_b1.dgn
SCALE: As Shown

BRIDGE NO. 07566

DRAWING NO. 64457

PRINT DATE: 10/20/2023

DATE REVISED	DATE REVISED	FED. ROAD DIST. NO.	STATE	JOB NO.	SHEET NO.	TOTAL SHEETS
		6	ARK.	090523	47	103
		07566 -	BENT 1	- 64458		

BAR LIST

Mark	No. Req'd	Length	Pin Dia.	"A"
B401	78	14'-1½"	2"	-
B402	10	9'-0¼"	2"	-
B403	21	43'-11"	Str.	-
B404	40	5'-0"	Str.	-
B405	48	8'-8½"	2"	-
B406	8	6'-4"	Str.	-
B407	20	6'-1½"	3"	-
B408	25	5'-3½"	3"	-
B601	6	45'-4"	4½"	-
B602	6	44'-0"	Str.	-
B603	18	9'-1¾"	4½"	-
R501E	8	11'-10"	Str.	-
R502E	44	4'-6½"	2½"	1'-10"
R503E	44	6'-6½"	2½"	2'-10"
R504E	16	8'-10"	2½"	-
R505E	6	10'-5¼"	2½"	4'-10"
R506E	34	6'-10¼"	3¾"	-
R507E	2	9'-6¼"	2½"	4'-4½"
R508E	2	4'-2½"	2½"	1'-8"
R509E	2	3'-11½"	2½"	1'-6½"
R510E	2	6'-2½"	2½"	2'-8"
R511E	2	5'-11½"	2½"	2'-6½"
R601E	14	7'-4¾"	4½"	-
R801E	12	8'-10"	6"	-
R802E	4	11'-10"	Str.	-
W601	52	7'-7"	Str.	-
W701	44	11'-8"	Str.	-

Bars with an "E" suffix are to be epoxy coated.

See Dwg. Nos. 64471-64474 for details of reinforcing in span railing.

Bending Diagram
(Dimensions are out to out of bars)

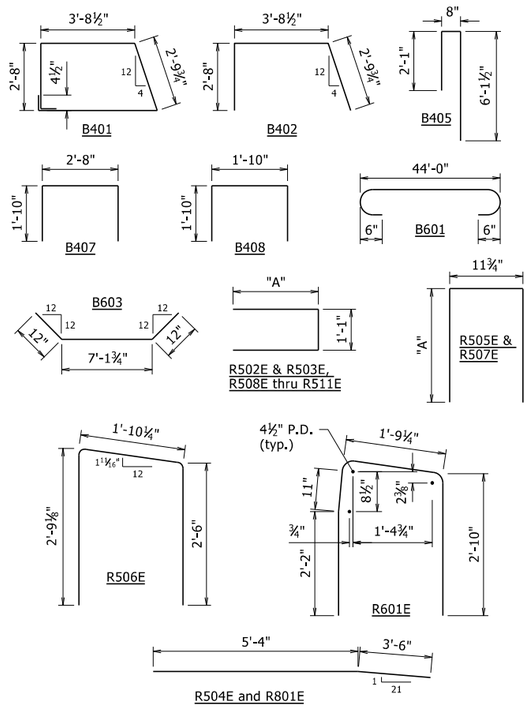

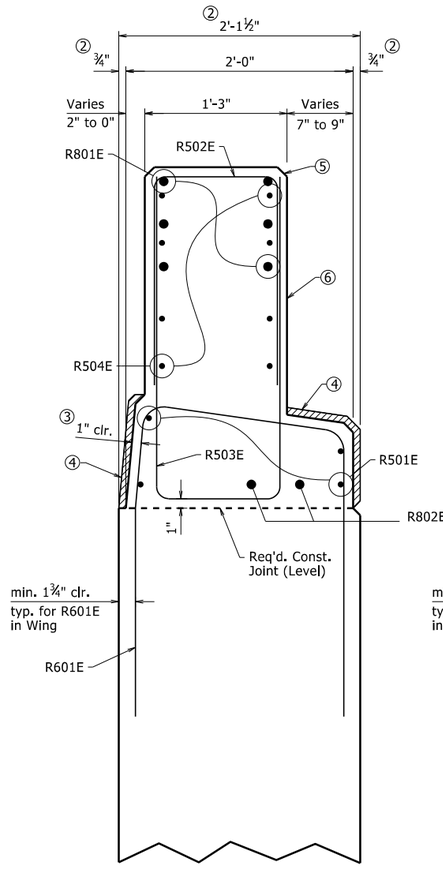

SECTION U-U ①

1½" = 1'-0"

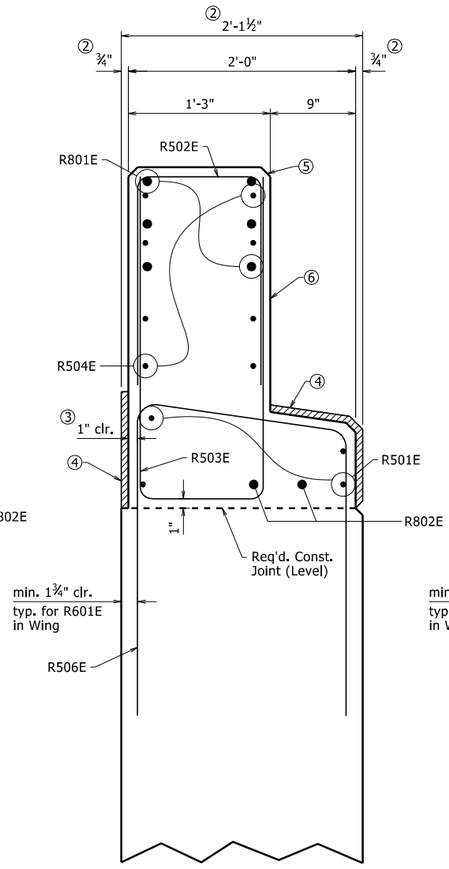

SECTION V-V ①

1½" = 1'-0"

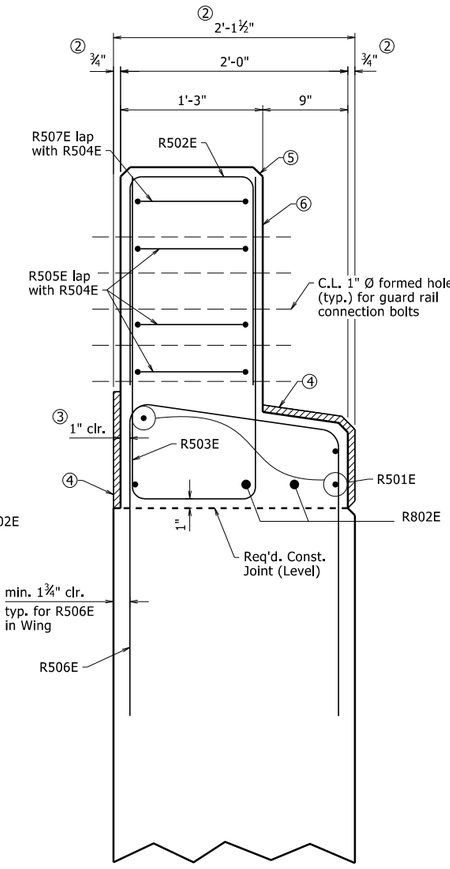

SECTION W-W ①

1½" = 1'-0"

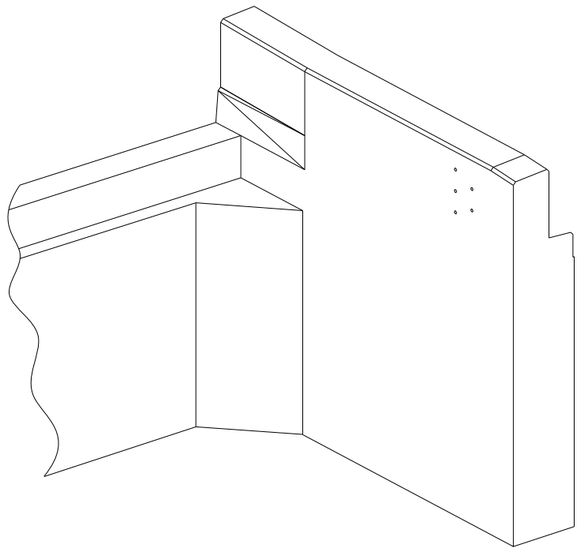

THREE DIMENSIONAL VIEW OF WING AT END BENT

No Scale

Concrete in Decorative Railing on Spans and Wings shall be Class S(AE) except that the coarse aggregate size shall meet AASHTO M 43, Size 67 (¾" Max.).

① Unless noted otherwise, Railing component (Curb and Wall) dimensions do not include additional allowance for architectural finish. See Dwg. No. 64474 for details of architectural finish.

② Dimension includes ¾" allowance for Fieldstone Finish. See Dwg. No. 64474 for details of architectural finish on wing railing.

③ A typical clear cover of 1" shall be provided for the Railing component (Curb and Wall) reinforcement, unless otherwise noted. This clear cover does not include any allowance for architectural finish.

④ ¾" allowance for Fieldstone Finish, typical for Curb.

⑤ All exposed corners for the Railing components (Curb and Wall) shall be chamfered 1" unless otherwise noted.

⑥ Exposed faces of Concrete Wall to receive concrete stain only. No architectural finish.



BRIDGE ENGINEER

SHEET 4 OF 4
DETAILS OF BENT 1

ROUTE SEC.

ARKANSAS STATE HIGHWAY COMMISSION

LITTLE ROCK, ARK.

DRAWN BY: WAC DATE: 7/6/2021 FILENAME: b090523_b1.dgn
CHECKED BY: DBS DATE: 1/9/2023 SCALE: As Shown
DESIGNED BY: WAC DATE: 4/2021

BRIDGE NO. 07566 DRAWING NO. 64458

PRINT DATE: 10/20/2023

DATE REVISED	DATE REVISED	FED. ROAD DIST. NO.	STATE	JOB NO.	SHEET NO.	TOTAL SHEETS
		6	ARK.	090523	48	103
		07566 - INT. BENTS - 64459				

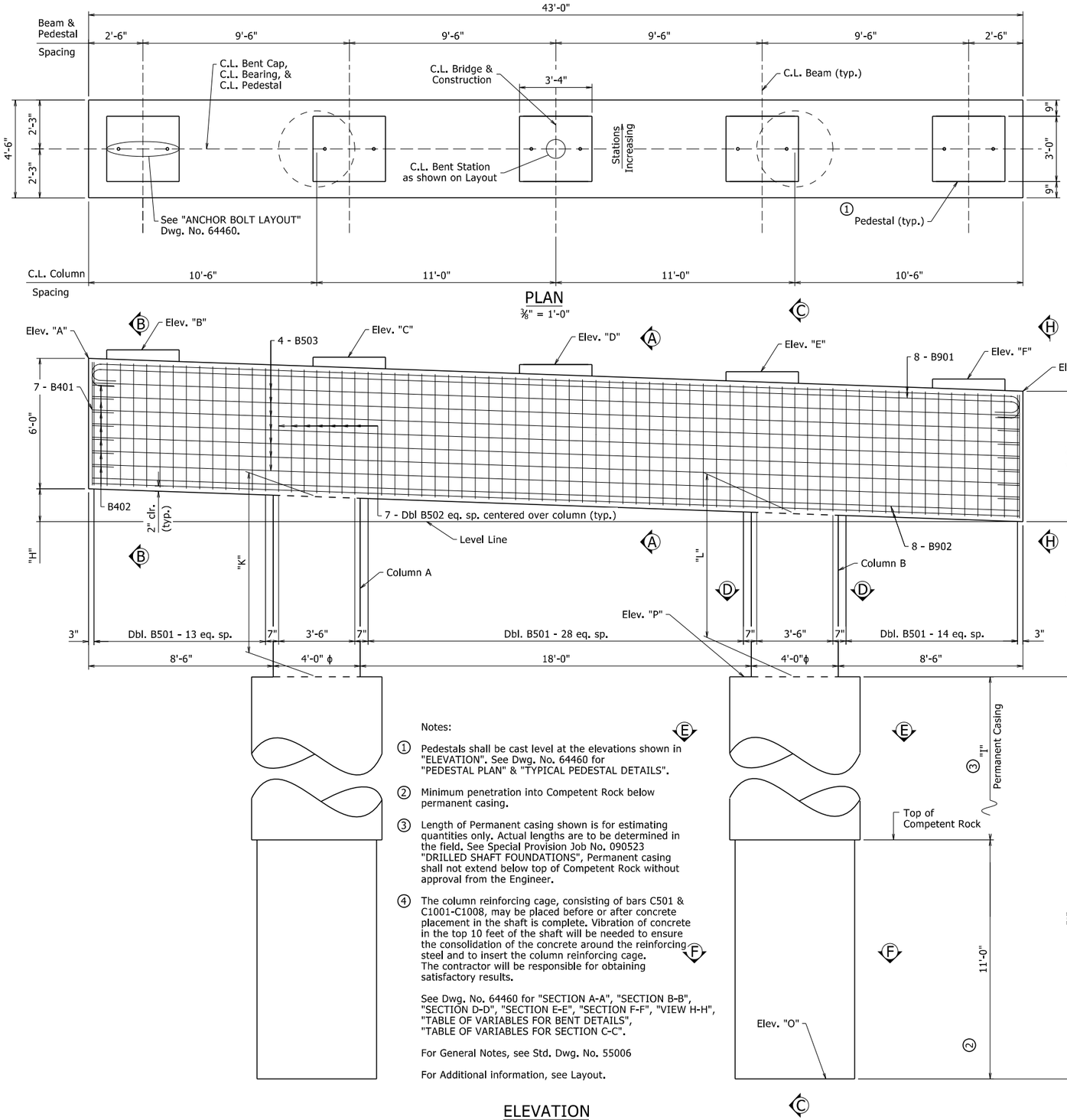

Notes:

① Pedestals shall be cast level at the elevations shown in "ELEVATION". See Dwg. No. 64460 for "PEDESTAL PLAN" & "TYPICAL PEDESTAL DETAILS".

② Minimum penetration into Competent Rock below permanent casing.

③ Length of Permanent casing shown is for estimating quantities only. Actual lengths are to be determined in the field. See Special Provision Job No. 090523 "DRILLED SHAFT FOUNDATIONS", Permanent casing shall not extend below top of Competent Rock without approval from the Engineer.

④ The column reinforcing cage, consisting of bars C501 & C1001-C1008, may be placed before or after concrete placement in the shaft is complete. Vibration of concrete in the top 10 feet of the shaft will be needed to ensure the consolidation of the concrete around the reinforcing steel and to insert the column reinforcing cage. The contractor will be responsible for obtaining satisfactory results.

See Dwg. No. 64460 for "SECTION A-A", "SECTION B-B", "SECTION D-D", "SECTION E-E", "SECTION F-F", "VIEW H-H", "TABLE OF VARIABLES FOR BENT DETAILS", "TABLE OF VARIABLES FOR SECTION C-C".

For General Notes, see Std. Dwg. No. 55006

For Additional information, see Layout.

ELEVATION

Looking Ahead
⅜" = 1'-0"

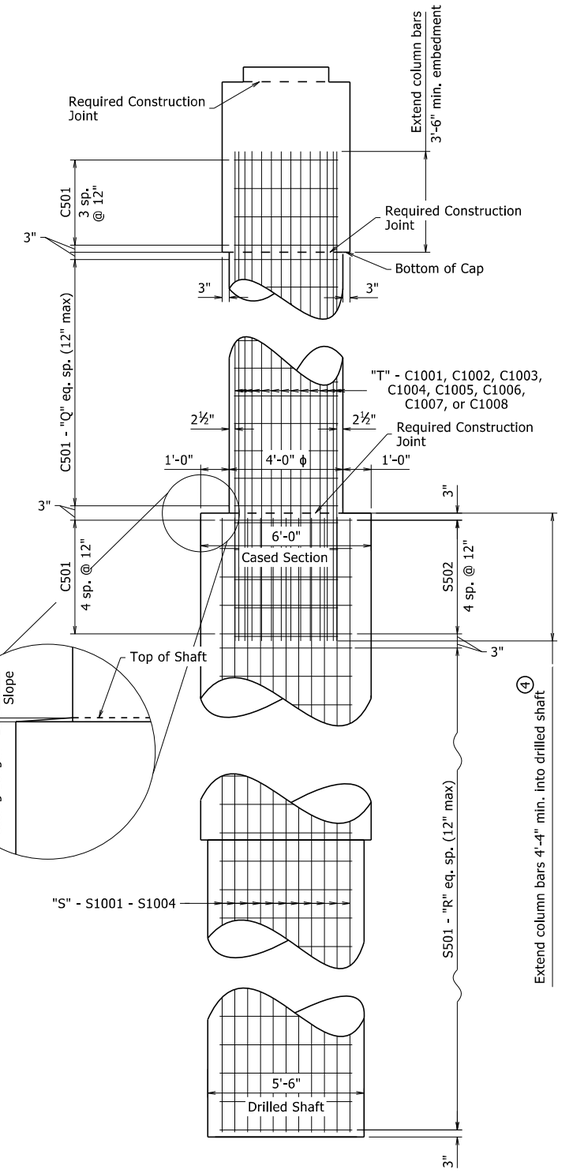

SECTION C-C

⅜" = 1'-0"

STATE OF ARKANSAS
LICENSED PROFESSIONAL ENGINEER
No. 9235
11/6/23
CHARLES R. ELLIS

BRIDGE ENGINEER

SHEET 1 OF 3
DETAILS OF
BENTS 2 THRU 5

ROUTE SEC.

ARKANSAS STATE HIGHWAY COMMISSION

LITTLE ROCK, ARK.

DRAWN BY: JWP DATE: 7-12-2021 FILENAME: b090523_b2.dgn
CHECKED BY: DBS DATE: 8-09-2021 SCALE: ⅜" = 1'-0"
DESIGNED BY: WAC DATE: 05-2021

BRIDGE NO. 07566 DRAWING NO. 64459

PRINT DATE: 10/20/2023

DATE REVISED	DATE REVISED	FED. RD. DIST. NO.	STATE	JOB NO.	SHEET NO.	TOTAL SHEETS
		6	ARK.	090523	49	103
		07566 - INT. BENTS - 64460				

TABLE OF VARIABLES FOR BENT DETAILS

	"A"	"B"	"C"	"D"	"E"	"F"	"G"	"H"	"I"	"J"	"K"	"L"	"M"	"N"	"O"	"P"	"U"
Bent 2	1251.39	1251.69	1251.44	1251.10	1250.77	1250.35	1249.87	1'-6 3/16"	17'-5"	28'-6"	9'-0 1/4"	8'-2 15/16"	0'-11 1/2"	42'-4 7/16"	1207.50	1236.00	7'-10 7/16"
Bent 3	1250.82	1251.14	1251.03	1250.84	1250.65	1250.38	1249.96	10 5/16"	20'-11"	32'-0"	13'-7 5/16"	13'-2 1/16"	1'-1 1/4"	50'-11 1/2"	1199.00	1231.00	12'-11 1/2"
Bent 4	1250.73	1251.05	1250.94	1250.75	1250.56	1250.29	1249.87	10 5/16"	26'-11"	38'-0"	14'-6 1/4"	14'-0 15/16"	1'-1 1/4"	57'-10 7/16"	1192.00	1230.00	13'-10 7/16"
Bent 5	1251.42	1251.72	1251.38	1250.96	1250.54	1250.05	1249.53	1'-10 1/16"	27'-5"	38'-6"	14'-11 1/2"	13'-11 7/8"	0'-11 1/2"	57'-0 3/8"	1191.50	1230.00	13'-6 5/16"

TABLE OF VARIABLES FOR SECTION C-C

		"Q"	"R"	"S"	"T"
Bent 2	Column A	9	23	27	15
	Column B	8	23	27	15
Bent 3	Column A	14	26	27	15
	Column B	13	26	27	15
Bent 4	Column A	15	32	27	15
	Column B	14	32	27	15
Bent 5	Column A	15	33	27	15
	Column B	14	33	27	15

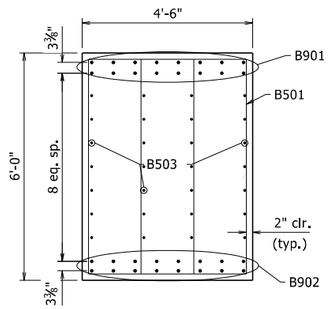

SECTION A-A
½"=1'-0"

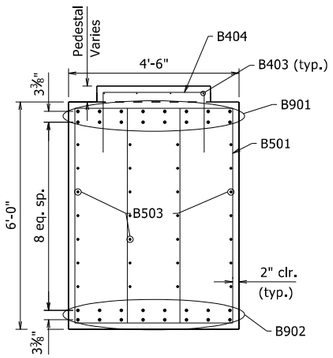

SECTION B-B
½"=1'-0"

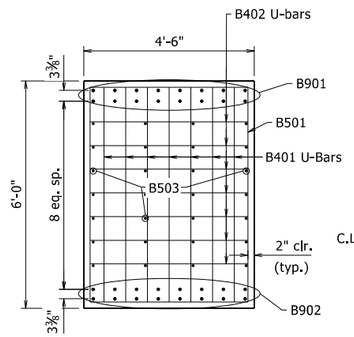

VIEW H-H
½"=1'-0"

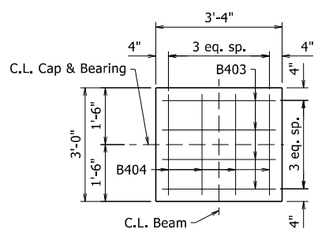

PEDESTAL PLAN
½"=1'-0"

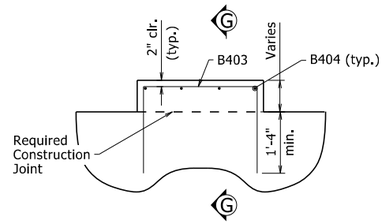

TYPICAL PEDESTAL DETAILS
LOOKING AHEAD
½"=1'-0"

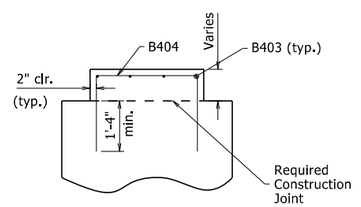

SECTION G-G
½"=1'-0"

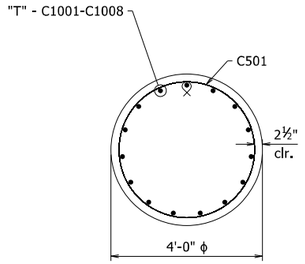

SECTION D-D
½"=1'-0"

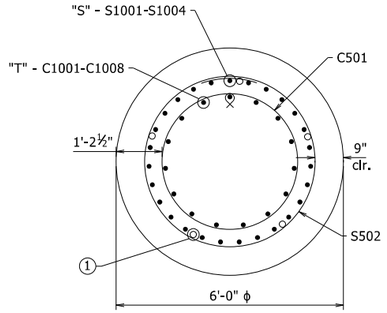

SECTION E-E
½"=1'-0"

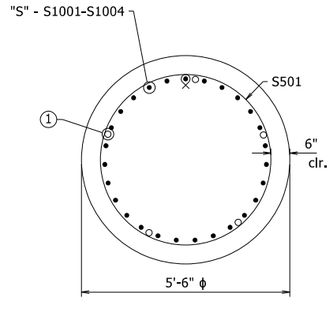

SECTION F-F
½"=1'-0"

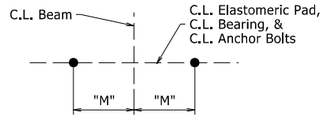

ANCHOR BOLT LAYOUT
No Scale

① 5 - 1½"ϕ min. Schedule 40 Steel Pipes equally spaced. See Special Provision Job No. 090523 "NONDESTRUCTIVE TESTING OF DRILLED SHAFTS".

STATE OF ARKANSAS
LICENSED PROFESSIONAL ENGINEER
No. 9235
11/6/23
CHARLES R. ELLIS

BRIDGE ENGINEER

SHEET 2 OF 3
DETAILS OF
BENTS 2 THRU 5

ROUTE SEC.

ARKANSAS STATE HIGHWAY COMMISSION
LITTLE ROCK, ARK.

DRAWN BY: JWP DATE: 7-12-2021 FILENAME: b090523_b2.dgn
CHECKED BY: DBS DATE: 8-09-2021 SCALE: ½" = 1'-0"
DESIGNED BY: WAC DATE: 05-2021

BRIDGE NO. 07566 DRAWING NO. 64460

PRINT DATE: 10/20/2023

DATE REVISED	DATE REVISED	FED. RD. DIST. NO.	STATE	JOB NO.	SHEET NO.	TOTAL SHEETS
		6	ARK.	090523	50	103
		07566 - INT. BENTS - 64461				

	MARK	NO. REQ'D	LENGTH	P.D.
BENT 2	B401	14	6'-8"	3"
	B402	14	5'-2"	3"
	B403	20	6'-4"	3"
	B404	20	6'-0"	3"
	B501	122	17'-4"	2½"
	B502	20	13'-10"	2½"
	B503	28	42'-8"	Str.
	B901	16	45'-2"	9"
	B902	16	42'-8"	Str.
	C501	36	12'-8"	3¾"
	C1001	15	17'-1"	Str.
	C1002	15	16'-4"	Str.
①	S501	50	15'-6"	3¾"
①	S502	10	16'-6"	3¾"
①	S1001	81	28'-2"	Str.
BENT 3	B401	14	6'-8"	3"
	B402	14	5'-2"	3"
	B403	20	6'-4"	3"
	B404	20	6'-0"	3"
	B501	122	17'-4"	2½"
	B502	20	13'-10"	2½"
	B503	28	42'-8"	Str.
	B901	16	45'-2"	9"
	B902	16	42'-8"	Str.
	C501	46	12'-8"	3¾"
	C1003	15	21'-8"	Str.
	C1004	15	21'-2"	Str.
①	S501	55	15'-6"	3¾"
①	S502	10	16'-6"	3¾"
①	S1002	81	31'-8"	Str.
BENT 4	B401	14	6'-8"	3"
	B402	14	5'-2"	3"
	B403	20	6'-4"	3"
	B404	20	6'-0"	3"
	B501	122	17'-4"	2½"
	B502	20	13'-10"	2½"
	B503	28	42'-8"	Str.
	B901	16	45'-2"	9"
	B902	16	42'-8"	Str.
	C501	49	12'-8"	3¾"
	C1005	15	22'-7"	Str.
	C1006	15	22'-1"	Str.
①	S501	67	15'-6"	3¾"
①	S502	10	16'-6"	3¾"
①	S1003	81	37'-8"	Str.
BENT 5	B401	14	6'-8"	3"
	B402	14	5'-2"	3"
	B403	20	6'-4"	3"
	B404	20	6'-0"	3"
	B501	122	17'-4"	2½"
	B502	20	13'-10"	2½"
	B503	28	42'-8"	Str.
	B901	16	45'-2"	9"
	B902	16	42'-8"	Str.
	C501	49	12'-8"	3¾"
	C1007	15	23'-0"	Str.
	C1008	15	22'-1"	Str.
①	S501	68	15'-6"	3¾"
①	S502	10	16'-6"	3¾"
①	S1004	81	38'-2"	Str.

BENDING DIAGRAMS

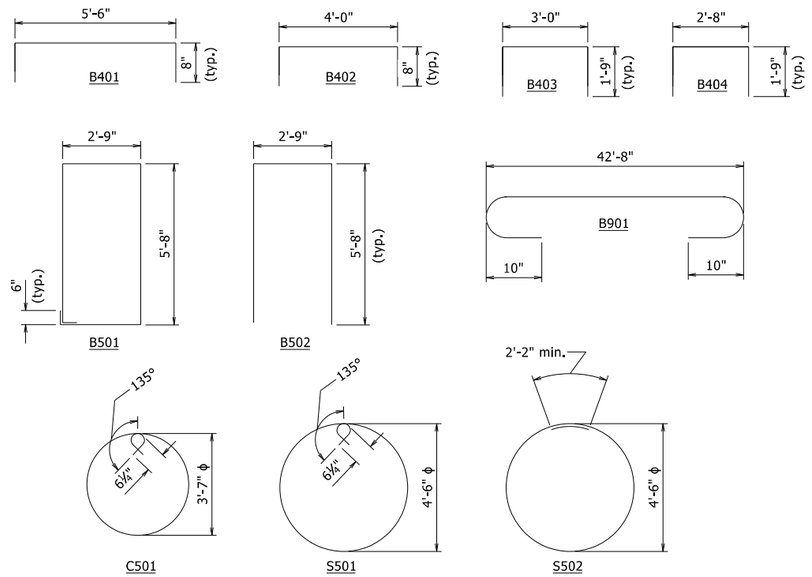

① Non-pay item, subsidiary to Special Provision Job No. 090523 "Drilled Shaft Foundations"

Dimensions are out to out of bars.

STATE OF ARKANSAS
LICENSED PROFESSIONAL ENGINEER
No. 9235
11/6/23
CHARLES R. ELLIS

BRIDGE ENGINEER

SHEET 3 OF 3
DETAILS OF
BENTS 2 THRU 5

ROUTE SEC.

ARKANSAS STATE HIGHWAY COMMISSION
LITTLE ROCK, ARK.

DRAWN BY: JWP DATE: 7-12-2021 FILENAME: b090523_b2.dgn
CHECKED BY: DBS DATE: 8-09-2021 SCALE: NO SCALE
DESIGNED BY: WAC DATE: 05-2021

BRIDGE NO. 07566 DRAWING NO. 64461

PRINT DATE: 10/20/2023

DATE REVISED	DATE REVISED	FED. ROAD DIST. NO.	STATE	JOB NO.	SHEET NO.	TOTAL SHEETS
		6	ARK.	090523	51	103
		07566 -	BENT 6	- 64462		

① Includes ¾" allowance for architectural finish on each side, 2'-0" nominal width. See Dwg. No. 64474.

② Pedestals shall be cast level at the elevation shown.

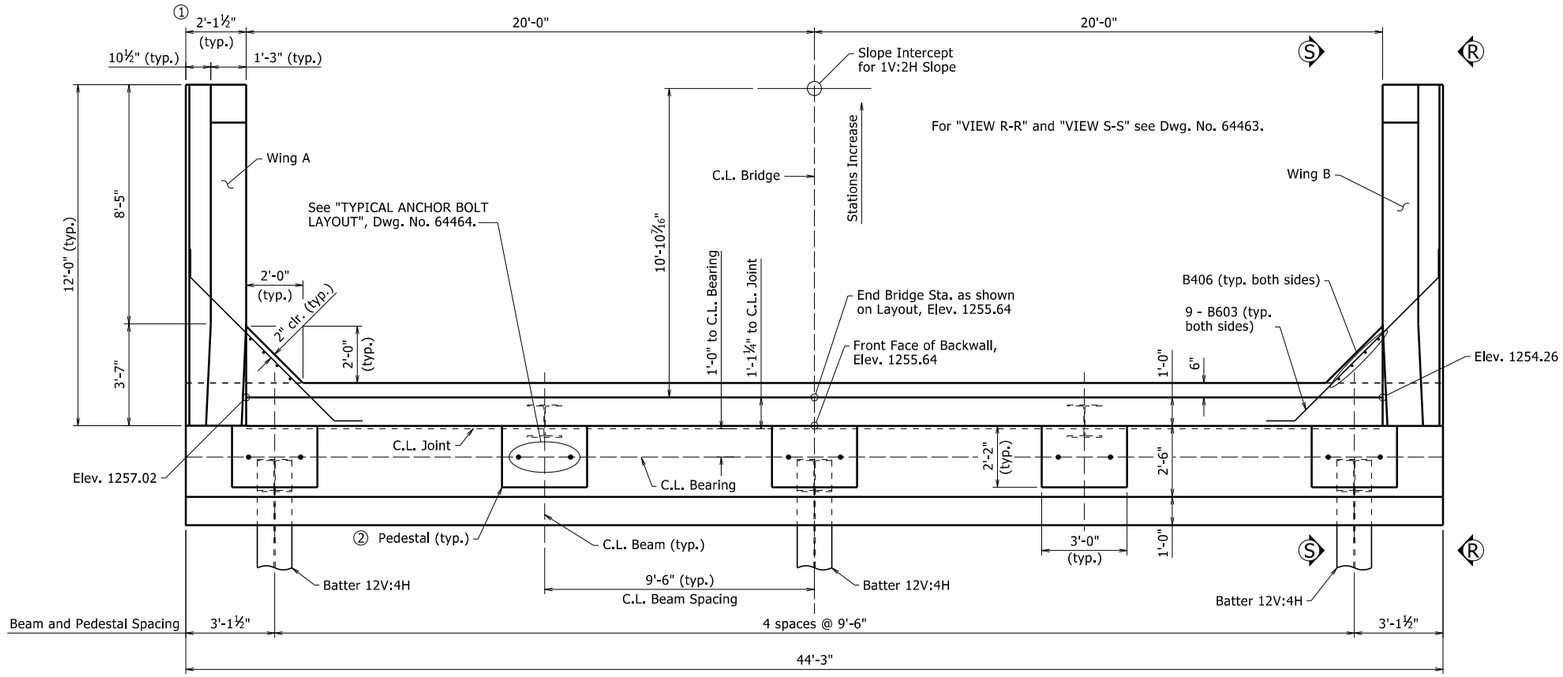

PLAN VIEW

⅜" = 1'-0"

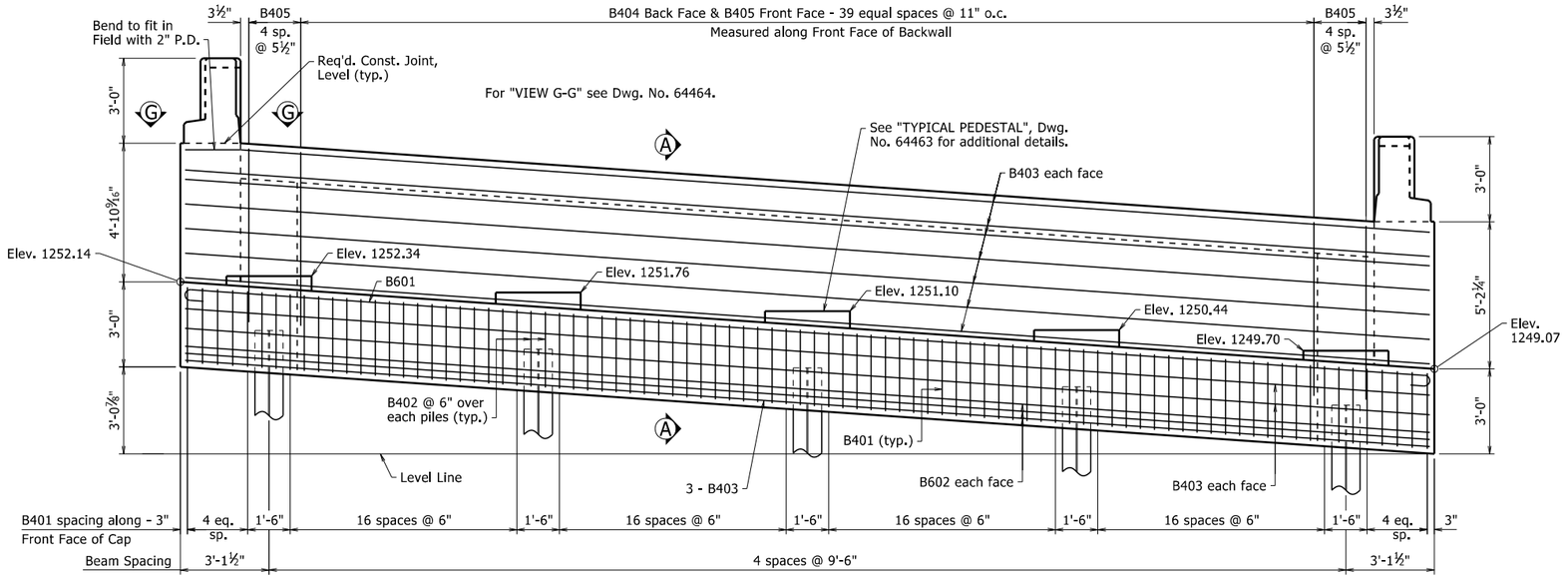

ELEVATION VIEW

Looking Ahead

⅜" = 1'-0"

General Notes:

Class 2 Protective Surface Treatment shall be applied to the top of backwall only. Class 2 Protective Surface Treatment SHALL NOT be applied to any portion of the Railings (including Rail, Post, and Curb) and Wings.

The Backwall above the required construction joint shall not be poured until the beams are in place. Backwall may be placed prior to placing the adjacent concrete deck only if the optional backwall construction joint is used. See St. Dwg. No. 55008, "Expansion Device Installation at End Bents", for additional information.

Structural Steel in end bents shall be ASTM A709, Gr. 50W and shall be paid for as "Structural Steel in Beam Spans (A709, Gr. 50W)".

For details of steel piling, see Std. Dwg. No. 55020. All piling shall be Gr. 50.

See Std. Dwg. No. 55006 for additional notes.

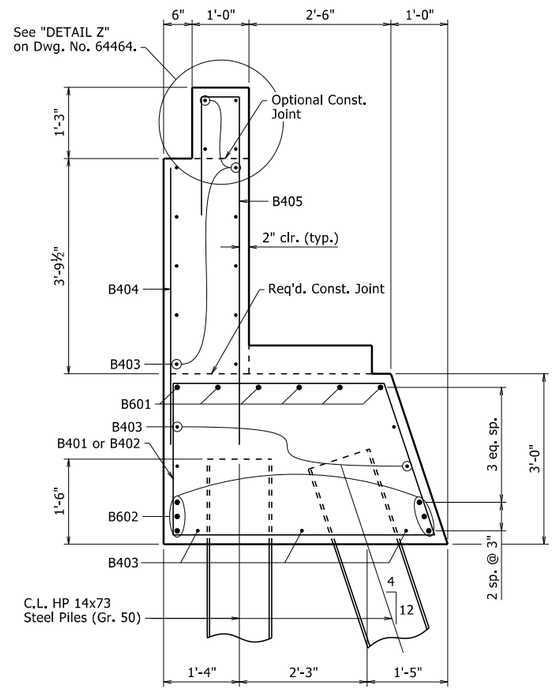

SECTION A-A

¾" = 1'-0"

STATE OF ARKANSAS
LICENSED PROFESSIONAL ENGINEER
No. 9235
11/6/23
CHARLES R. ELLIS

BRIDGE ENGINEER

SHEET 1 OF 4
DETAILS OF BENT 6

ROUTE SEC.

ARKANSAS STATE HIGHWAY COMMISSION

LITTLE ROCK, ARK.

DRAWN BY: WAC DATE: 7/6/2021
CHECKED BY: DBS DATE: 1/9/2023
DESIGNED BY: WAC DATE: 4/2021

FILENAME: b090523_b6.dgn
SCALE: As Shown

BRIDGE NO. 07566 DRAWING NO. 64462

PRINT DATE: 10/20/2023

DATE REVISED	DATE REVISED	FED. RD. DIST. NO.	STATE	JOB NO.	SHEET NO.	TOTAL SHEETS
		6	ARK.	090523	52	103
		07566 -	BENT 6	- 64463		

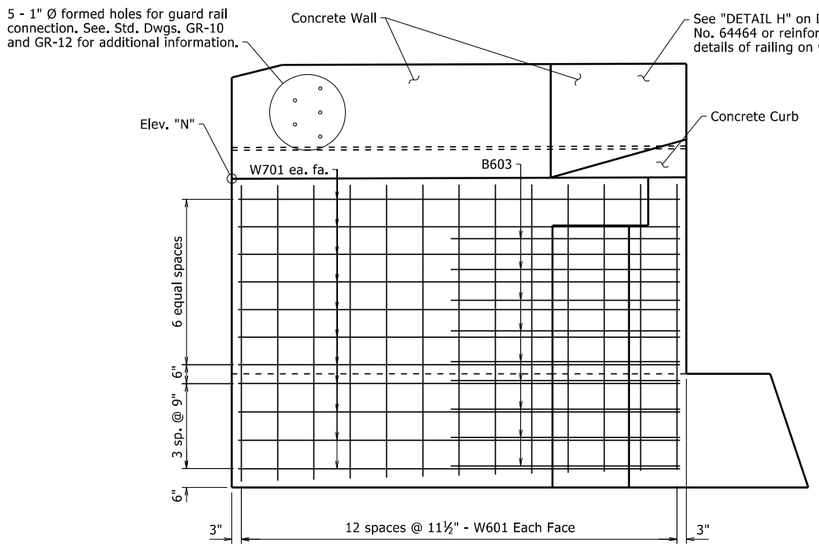

VIEW S-S

Wing B Shown
½" = 1'-0"

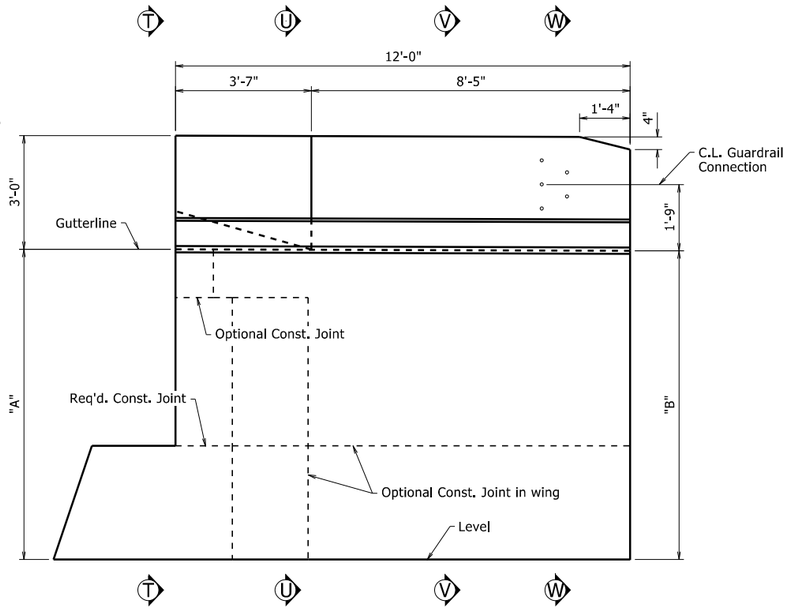

VIEW R-R

Wing B Shown
½" = 1'-0"

For "SECTION U-U", "SECTION V-V" and "SECTION W-W" see Dwg. No. 64465.

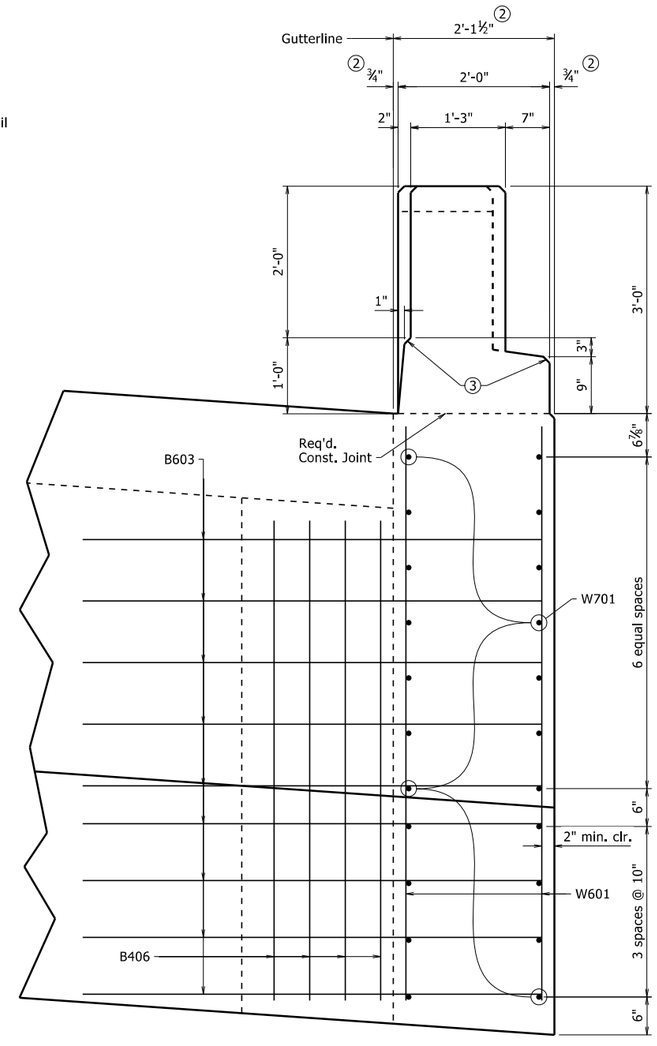

VIEW T-T ①

1" = 1'-0"

TABLE OF VARIABLES

Wing	Variable		
	"A"	"B"	"N"
Wing A	7'-10 9/16"	8'-0"	1257.14
Wing B	8'-2 1/4"	8'-1 13/16"	1254.22

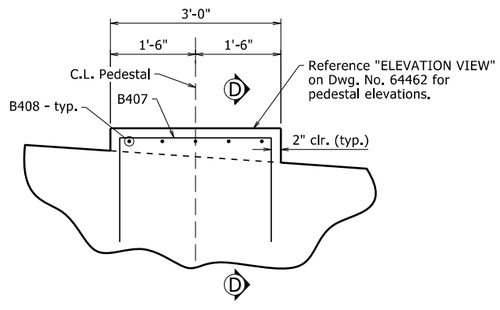

TYPICAL PEDESTAL

¾" = 1'-0"

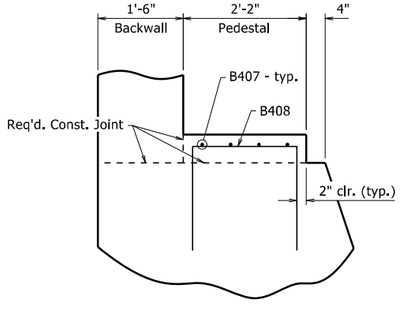

SECTION D-D

¾" = 1'-0"

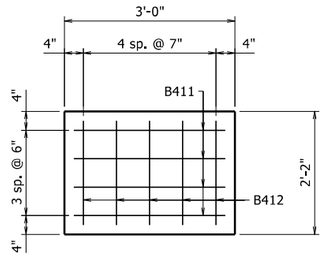

PEDESTAL PLAN

¾" = 1'-0"

① Unless noted otherwise, Railing components (Rail, Post, Curb, and Wall) dimensions do not include additional allowance for architectural finish. See Dwg. No. 64474 details of architectural finish.

② Dimension includes ¾" allowance for Fieldstone Finish. See Dwg. No. 64474 for details of architectural finish on wing railing.

③ All exposed corners for the Railing components (Rail, Post, Curb, and Wall) shall be chamfered 1" unless otherwise noted.

STATE OF ARKANSAS
LICENSED PROFESSIONAL ENGINEER
No. 9235
11/6/23
CHARLES R. ELLIS

BRIDGE ENGINEER

SHEET 2 OF 4
DETAILS OF BENT 6

ROUTE SEC.

ARKANSAS STATE HIGHWAY COMMISSION
LITTLE ROCK, ARK.

DRAWN BY: WAC DATE: 7/6/2021 FILENAME: b090523_b6.dgn
CHECKED BY: DBS DATE: 1/9/2023 SCALE: As Shown
DESIGNED BY: WAC DATE: 4/2021

BRIDGE NO. 07566 DRAWING NO. 64463

PRINT DATE: 10/20/2023

DATE REVISED	DATE REVISED	FED. RD. DIST. NO.	STATE	JOB NO.	SHEET NO.	TOTAL SHEETS
		6	ARK.	090523	53	103
				07566 - BENT 6 - 64464		

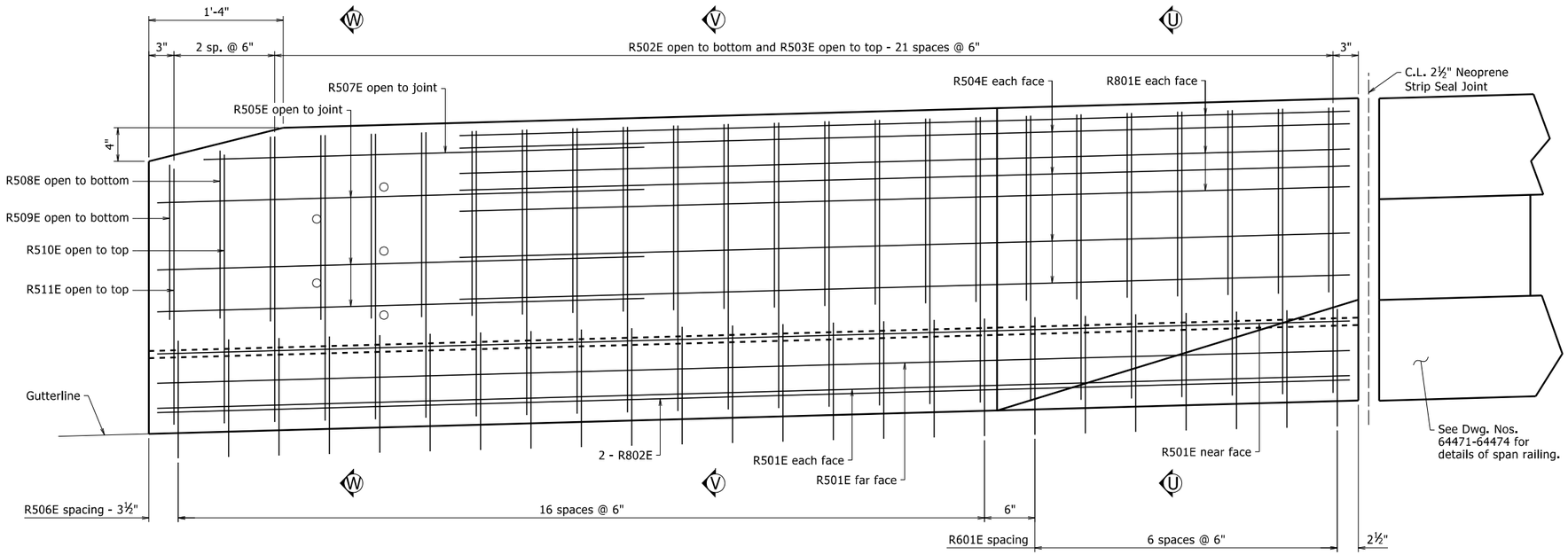

DETAIL H

1½" = 1'-0"

For "SECTION U-U", "SECTION V-V", and "SECTION W-W" see Dwg. No. 64465.

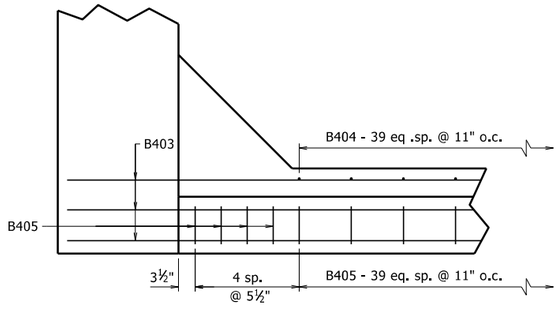

VIEW G-G

¾" = 1'-0"

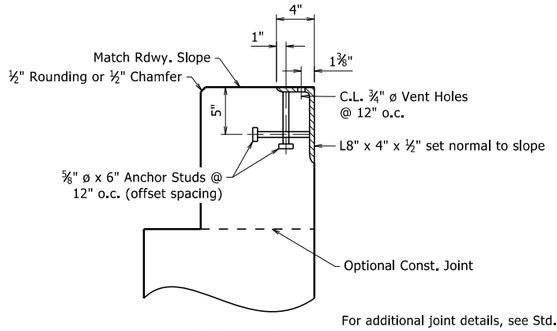

DETAIL Z

No Scale

For additional joint details, see Std. Dwg. No. 55008.

Concrete shall be hand packed under the joint armor in the backwall.

Transverse spacing between top anchor studs and vent holes shall be 6".

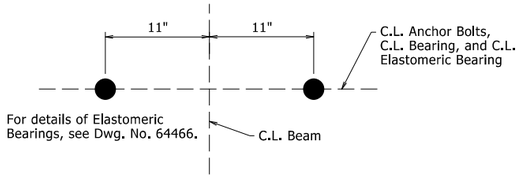

TYPICAL ANCHOR BOLT LAYOUT

No Scale

STATE OF ARKANSAS
LICENSED PROFESSIONAL ENGINEER
No. 9235
11/6/23
CHARLES R. ELLIS

BRIDGE ENGINEER

SHEET 3 OF 4
DETAILS OF BENT 6

ROUTE SEC.

ARKANSAS STATE HIGHWAY COMMISSION

LITTLE ROCK, ARK.

DRAWN BY: WAC DATE: 7/6/2021 FILENAME: b090523_b6.dgn
CHECKED BY: DBS DATE: 1/9/2023 SCALE: As Shown
DESIGNED BY: WAC DATE: 4/2021

BRIDGE NO. 07566 DRAWING NO. 64464

PRINT DATE: 10/20/2023

DATE REVISED	DATE REVISED	FED. RD. DIST. NO.	STATE	JOB NO.	SHEET NO.	TOTAL SHEETS
		6	ARK.	090523	54	103
		07566 -	BENT 6	- 64465		

BAR LIST

Mark	No. Req'd	Length	Pin Dia.	"A"
B401	78	14'-1½"	2"	-
B402	10	9'-0¼"	2"	-
B403	21	43'-11"	Str.	-
B404	40	5'-0"	Str.	-
B405	48	8'-8½"	2"	-
B406	8	6'-4"	Str.	-
B407	20	6'-1½"	3"	2'-8"
B408	25	5'-3½"	3"	1'-10"
B601	6	45'-3"	4½"	-
B602	6	43'-11"	Str.	-
B603	18	9'-1¾"	4½"	-
R501E	8	11'-10"	Str.	-
R502E	44	4'-6½"	2½"	1'-10"
R503E	44	6'-6½"	2½"	2'-10"
R504E	16	8'-10"	2½"	-
R505E	6	10'-5¼"	2½"	4'-10"
R506E	34	6'-10¼"	3¾"	-
R507E	2	9'-6¼"	2½"	4'-4½"
R508E	2	4'-2½"	2½"	1'-8"
R509E	2	3'-11½"	2½"	1'-6½"
R510E	2	6'-2½"	2½"	2'-8"
R511E	2	5'-11½"	2½"	2'-6½"
R601E	14	7'-4¾"	4½"	-
R801E	12	8'-10"	6"	-
R802E	4	11'-10"	Str.	-
W601	52	7'-7"	Str.	-
W701	44	11'-8"	Str.	-

Bars with an "E" suffix are to be epoxy coated.

See Dwg. Nos. 64471-64474 for details of reinforcing in span railing.

Bending Diagram
(Dimensions are out to out of bars)

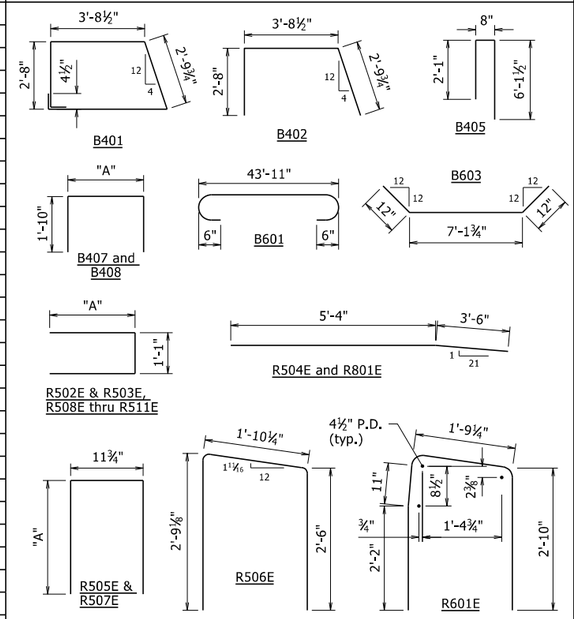

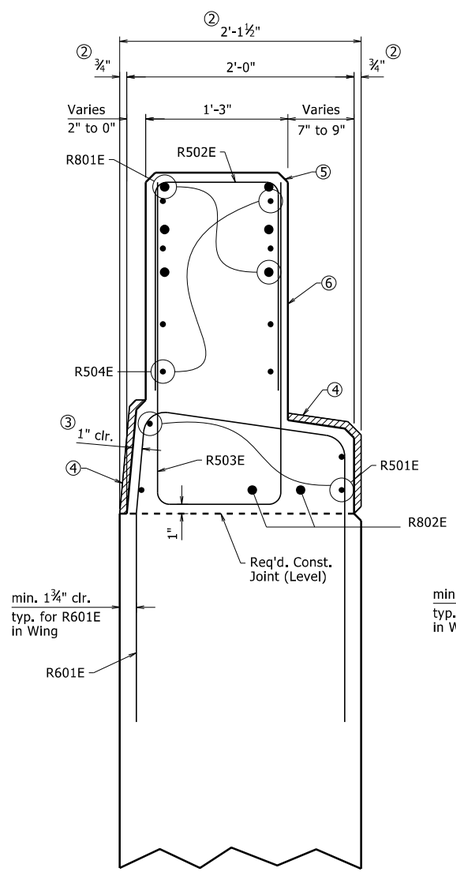

SECTION U-U ①

1½" = 1'-0"

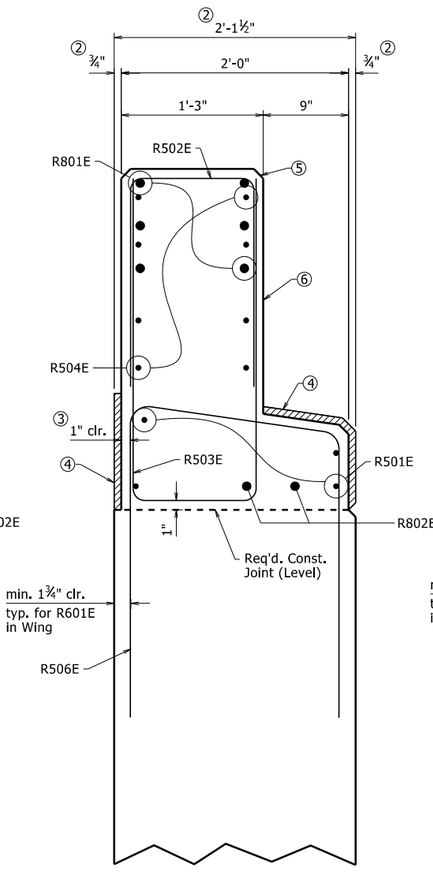

SECTION V-V ①

1½" = 1'-0"

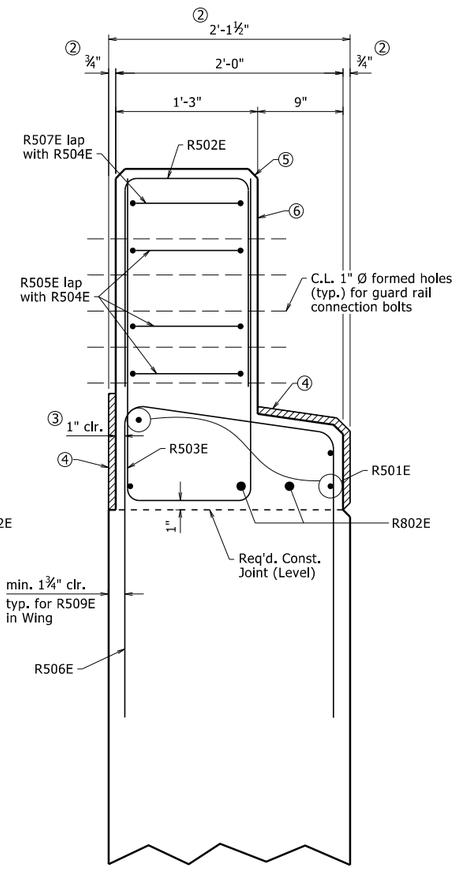

SECTION W-W ①

1½" = 1'-0"

Concrete in Decorative Railing on Spans and Wings shall be Class S(AE) except that the coarse aggregate size shall meet AASHTO M 43, Size 67 (¾" Max.).

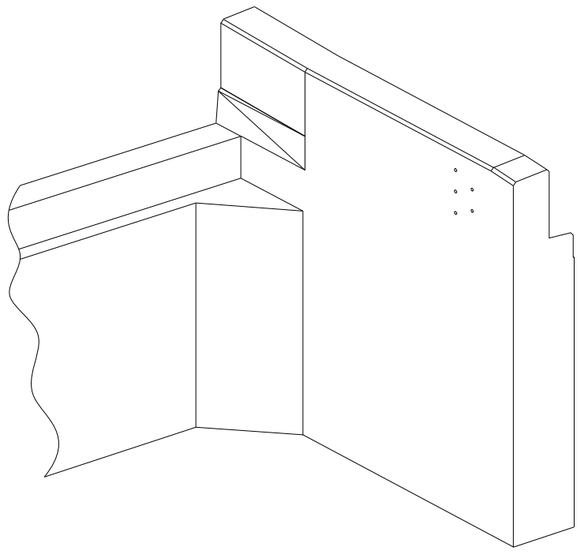

THREE DIMENSIONAL VIEW OF WING AT END BENT

No Scale

① Unless noted otherwise, Railing component (Curb and Wall) dimensions do not include additional allowance for architectural finish. See Dwg. No. 64474 for details of architectural finish.

② Dimension includes ¾" allowance for Fieldstone Finish. See Dwg. No. 64474 for details of architectural finish on wing railing.

③ A typical clear cover of 1" shall be provided for the Railing component (Curb and Wall) reinforcement, unless otherwise noted. This clear cover does not include any allowance for architectural finish.

④ ¾" allowance for Fieldstone Finish, typical for Curb.

⑤ All exposed corners for the Railing components (Curb and Wall) shall be chamfered 1" unless otherwise noted.

⑥ Exposed faces of Concrete Wall to receive concrete stain only. No architectural finish.

STATE OF ARKANSAS
LICENSED PROFESSIONAL ENGINEER
No. 9235
11/6/23
CHARLES R. ELLIS

BRIDGE ENGINEER

SHEET 4 OF 4
DETAILS OF BENT 6

ROUTE SEC.

ARKANSAS STATE HIGHWAY COMMISSION

LITTLE ROCK, ARK.

DRAWN BY: WAC DATE: 7/6/2021 FILENAME: b090523_b6.dgn
CHECKED BY: DBS DATE: 1/9/2023 SCALE: As Shown
DESIGNED BY: WAC DATE: 4/2021

BRIDGE NO. 07566 DRAWING NO. 64465

PRINT DATE: 10/20/2023

DATE REVISED	DATE REVISED	FED. RD. DIST. NO.	STATE	JOB NO.	SHEET NO.	TOTAL SHEETS
		6	ARK.	090523	55	103
		07566 - 420' UNIT - 64466				

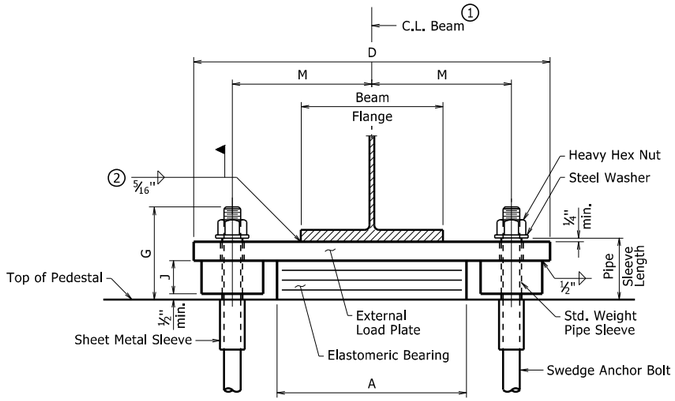

FRONT VIEW - BENTS WITH SHEAR BLOCKS

Bents 3 and 4

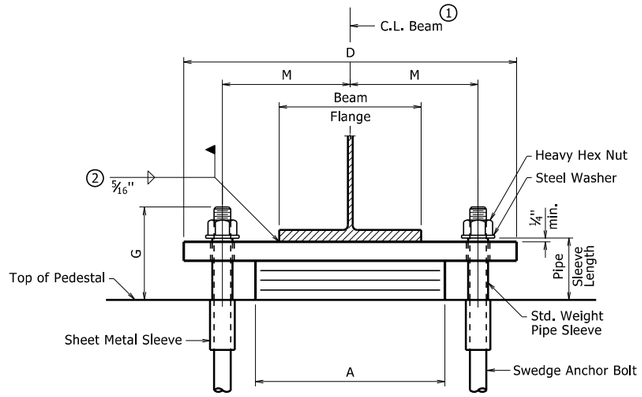

FRONT VIEW - BENTS WITHOUT SHEAR BLOCKS

Typical Unless Noted Otherwise

1. C.L. Elastomeric Pad shall be aligned with C.L. Beam.

2. Unless otherwise approved by the Engineer, welding of the external load plate at expansion bearings to the beam will be allowed only when:
   1) the approximate average air temperature during the 24 hour period immediately preceding welding is between 40°F and 80°F; and
   2) the slots in the external load plate are positioned to center on the anchor bolts; and
   3) no horizontal deformation of the elastomeric pad is evident.
   If welding at other temperatures is required, the Engineer will provide adjustment data.

   Care shall be taken to ensure that the external load plate is in full and complete contact with the beam flange before welding begins.

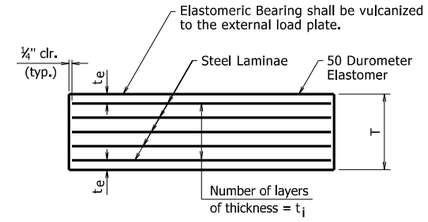

t_e = Thickness of elastomer cover on top and bottom of pad

t_i = Thickness of elastomer between steel laminae

N = Number of elastomer layers of thickness t_i

ELASTOMERIC BEARING

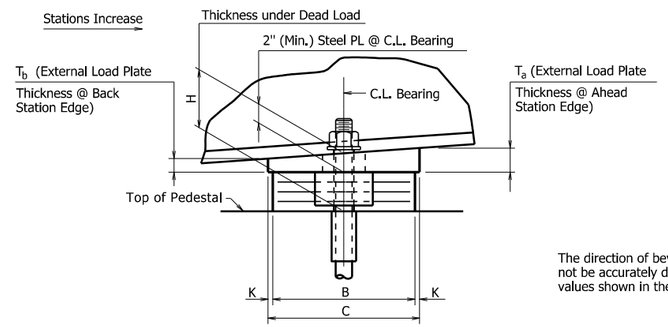

SIDE VIEW - BENTS WITH SHEAR BLOCKS

Bents 3 and 4

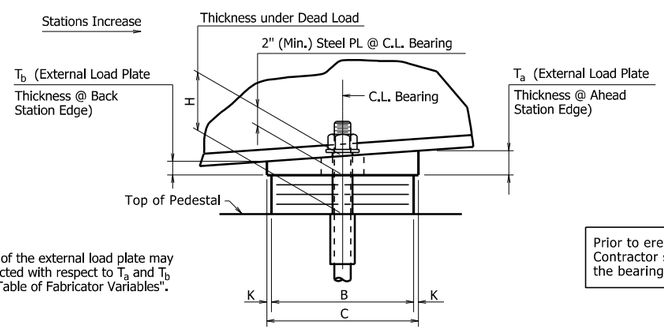

SIDE VIEW - BENTS WITHOUT SHEAR BLOCKS

Typical Unless Noted Otherwise

The direction of bevel of the external load plate may not be accurately depicted with respect to T_a and T_b values shown in the "Table of Fabricator Variables".

Prior to erection of the beams, the Contractor shall verify the orientation of the bearings with respect to T_a and T_b.

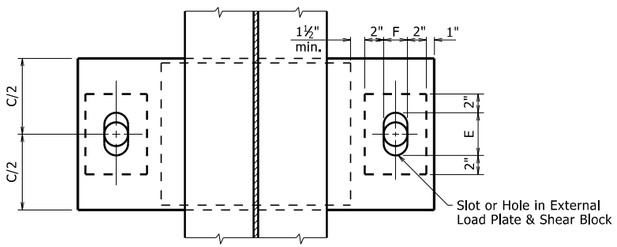

PLAN VIEW - BENTS WITH SHEAR BLOCKS

Bents 3 and 4

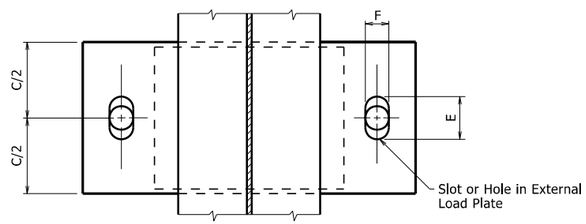

PLAN VIEW - BENTS WITHOUT SHEAR BLOCKS

Typical Unless Noted Otherwise

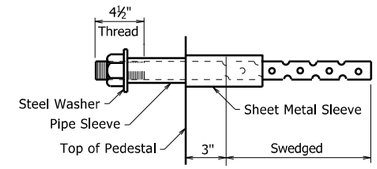

ANCHOR BOLT DETAIL

Anchor Bolts may be cast in place or drilled and grouted into place. If Anchor Bolts are to be cast in place, the Galvanized Sheet Metal Sleeves will not be required.

If Anchor Bolts are to be drilled and grouted in place, the Galvanized Sheet Metal Sleeves shall be cast in place as shown. Sleeves shall be dry packed with styrofoam, urethane foam or approved equal prior to pouring of concrete. After pouring of the cap and prior to erection of Structural Steel, the dry pack shall be removed and holes for the anchor bolts shall be accurately drilled into the concrete. Bolts placed in drilled holes shall be accurately set and fixed using a QPL approved epoxy or non-shrink grout that completely fills the holes. Galvanized Sheet Metal Sleeves will not be paid for directly, but will be considered subsidiary to the item "Structural Steel in Beam Spans (A709, Gr. 50W)"

GENERAL NOTES

Elastomeric Bearings shall conform to Section 808 and shall be paid for at the unit price bid for "Elastomeric Bearings".

External load plates and shear blocks shall conform to ASTM A709, Grade 50W. Pipe sleeves shall be ASTM A500, Grade B, and shall be galvanized to conform to AASHTO M 232, Class C or ASTM B695, Class 50.

External load plates and shear blocks shall be completely fabricated (including bevel, bolt holes and all shop welding) and shall be cleaned before vulcanizing to the elastomeric bearing. The surface in contact with the elastomeric bearing shall be cleaned in accordance with Subsection 808.03. Other surfaces shall be blast cleaned in accordance with Subsection 807.84(b) for painted steel and 807.84(e) for unpainted Grade 50W steel.

Anchor Bolts, Washers and Nuts shall conform to Subsection 807.07. The anchor bolt grade of steel shall be as specified in the "Table of Fabricator Variables". Indentations shall be circular with rounded bottoms and staggered as shown in the details.

Pipe Sleeves, Anchor Bolts, Washers and Nuts shall be paid for at the unit price bid for "Structural Steel in Beam Spans (A709, Gr. 50W)". External load plates and shear blocks will not be measured or paid for separately, but will be considered incidental to the unit price bid for "Elastomeric Bearings".

Bearings shall be seated in accordance with Subsection 808.08. This work and materials are considered subsidiary to the item "Elastomeric Bearings" and will not be paid for directly.

TABLE OF FABRICATOR VARIABLES

③ Maximum Design Load = Service I Limit State

PRINT DATE: 10/20/2023

BRIDGE NO.	LOCATION BENT NO(S).	LOCATION BEAM NO.	BEARING TYPE	NO. OF BEARINGS EACH BENT	③MAXIMUM DESIGN LOAD (KIPS)	G	H	ELASTOMERIC PAD A	B	N	t_i	t_e	NO. & THICKNESS OF STEEL LAMINAE	T	EXTERNAL LOAD PLATE C	D	E	F	J	K	M	T_a	T_b	ANCHOR BOLT (ø x L)	GRADE	PIPE SLEEVE SIZE (ø x L)	SHEET METAL SLEEVE SIZE (ø x L)	STEEL WASHER SIZE (O.D.)
07566	1	All	Exp	5	127	9¾"	6⁵⁄₁₆"	16"	10"	6	½"	¼"	7 @ 12 ga.	4¼"	11"	28½"	6½"	3⅛"	NA	½"	11"	1.995"	2.005"	2¼" x 36"	55	2½" x 6½"	4" x 14"	4"
	2	All	Exp	5	292	9¼"	4¹⁵⁄₁₆"	16"	13"	4	½"	¼"	5 @ 12 ga.	3"	14"	30"	6"	3¾"	NA	½"	11½"	1.994"	2.006"	2¾" x 41"	55	3" x 5¼"	5" x 16"	5"
	3	All	Fix	5	292	8¼"	4¹⁵⁄₁₆"	16"	13"	4	½"	¼"	5 @ 12 ga.	3"	14"	36"	3⅛"	3⅛"	2½"	½"	13¼"	1.994"	2.006"	2" x 32"	55	2½" x 5¼"	4" x 16"	3¾"
	4	All	Fix	5	292	8¼"	4¹⁵⁄₁₆"	16"	13"	4	½"	¼"	5 @ 12 ga.	3"	14"	36"	3⅛"	3⅛"	2½"	½"	13¼"	1.994"	2.006"	2" x 32"	55	2½" x 5¼"	4" x 16"	3¾"
	5	All	Exp	5	292	9¼"	4¹⁵⁄₁₆"	16"	13"	4	½"	¼"	5 @ 12 ga.	3"	14"	30"	6⅛"	3¾"	NA	½"	11½"	1.994"	2.006"	2¾" x 41"	55	3" x 5¼"	5" x 16"	5"
	6	All	Exp	5	127	9¾"	6⁵⁄₁₆"	16"	10"	6	½"	¼"	7 @ 12 ga.	4¼"	11"	28½"	6⅝"	3⅛"	NA	½"	11"	1.995"	2.005"	2¼" x 36"	55	2½" x 6½"	4" x 14"	4"



BRIDGE ENGINEER

DETAILS OF ELASTOMERIC BEARINGS

ROUTE SEC.

ARKANSAS STATE HIGHWAY COMMISSION

LITTLE ROCK, ARK.

DRAWN BY: JCS DATE: 7/26/2021 FILENAME: b090523_e1.dgn

CHECKED BY: NAC DATE: 8/19/2021 SCALE: No Scale

DESIGNED BY: WAC DATE: 8/2020

BRIDGE NO. 07566 DRAWING NO. 64466

DATE REVISED	DATE REVISED	FED. ROAD DIST. NO.	STATE	JOB NO.	SHEET NO.	TOTAL SHEETS
		6	ARK.	090523	56	103
				07566 - 420' UNIT - 64467		

Slab Reinforcing:

Longitudinal: S402E as shown
S502E as shown
S503E as shown over intermediate supports.
See "REINFORCING PLAN AND SLAB POURING SEQUENCE" on Dwg. No. 64469.

Transverse: S501E in top and bottom @ 12" o.c.
S501E in top and S401E in bottom @ 12" o.c. — Alternate
S801E in top @ 6" o.c. bundled with No. 5 bars.

Bar positions or clearances from the forms shall be maintained by means of stays, ties, hangers, or other approved devices per Subsection 804.06. Placement of slab bolsters or high-chairs with full-length lower runners directly on removable deck forms will not be allowed.

Class 2 Protective Surface Treatment shall be applied to the roadway surface only. It SHALL NOT be applied to the wings, railings, or curbs.

① Tolerance: Minus = ¼"
Plus equal to the amount of slab thickening used to meet slab thickness tolerance. See "ADJUSTMENT FOR SLAB THICKNESS TOLERANCE", Dwg. No. 64468.

② See "ADJUSTMENT FOR SLAB THICKNESS TOLERANCE" on Dwg. No. 64468.

③ 2'-0" nominal width. See Dwg. No. 64473.

④ See "WELD TABLE" for min. weld size on Std. Dwg. No. 55007.

⑤ S801E shall be placed at a 45° angle to satisfy the specified minimum clearance. See "VIEW D-D" on Dwg. No. 64470. Epoxy-coated Threaded End Anchor (LENTON ® TERMINATOR - D6 or approved equal) may be utilized as an alternate to hooked rebar. In this case, the edge of deck dimension shall be detailed to a thickness of 9". See "ALTERNATE OVERHANG DETAIL". Payment for reinforcing shall be based on hooked S801E. No adjustment will be made for concrete volume. Payment for concrete shall be based on the edge thickness of 9¾".

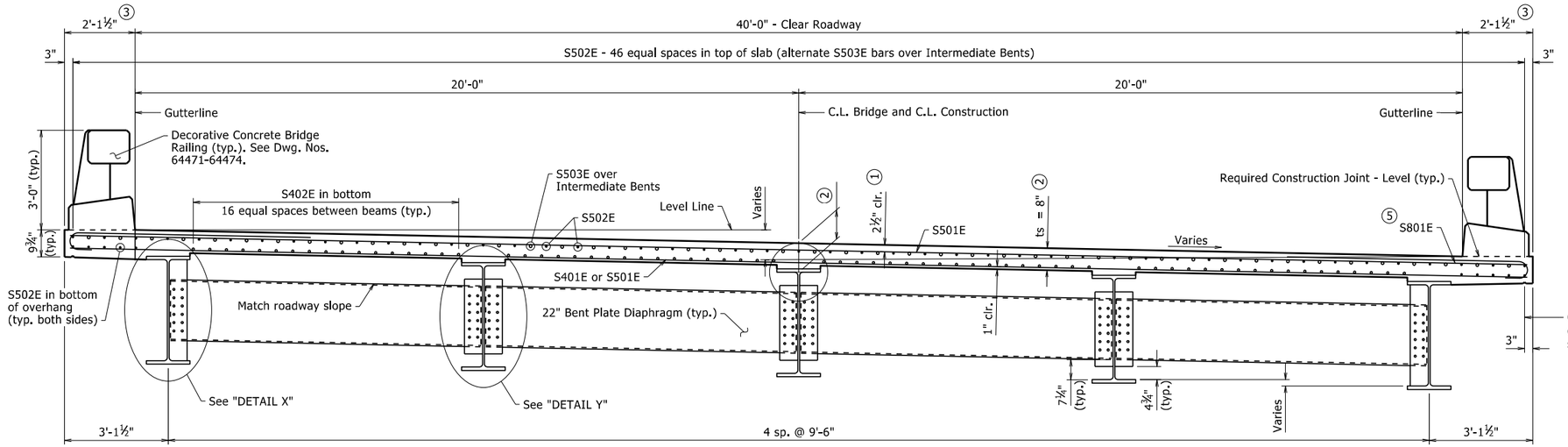

TYPICAL ROADWAY SECTION

Looking Ahead
½" = 1'-0"

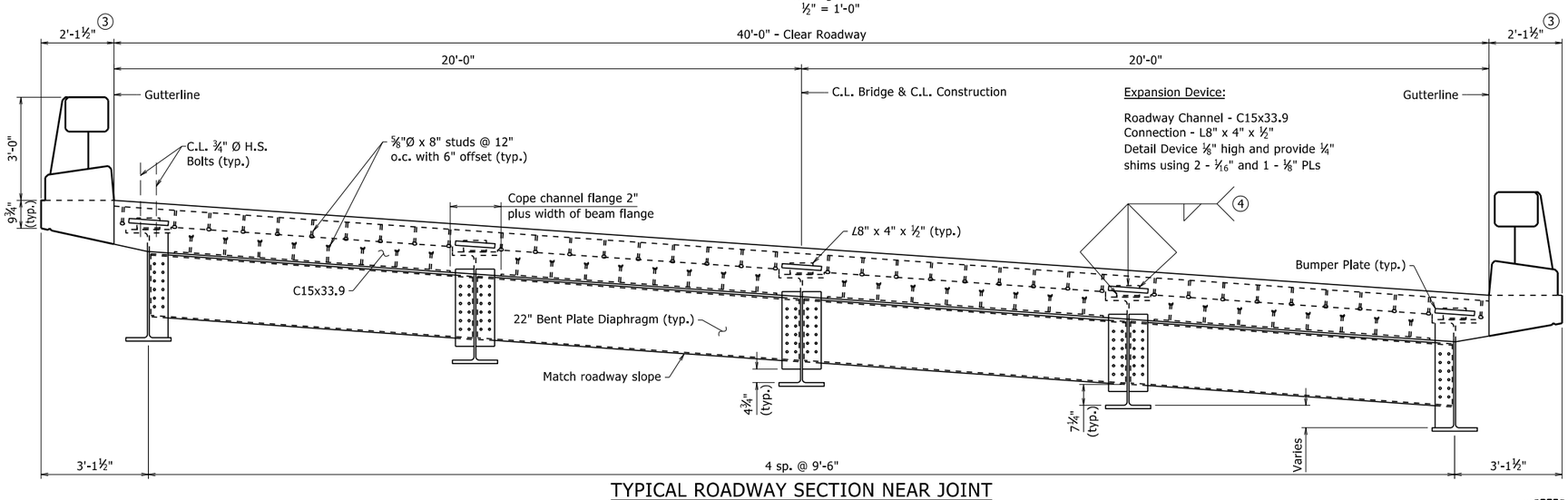

TYPICAL ROADWAY SECTION NEAR JOINT

Bent 1 - Looking Ahead
Bent 6 - Similar
½" = 1'-0"

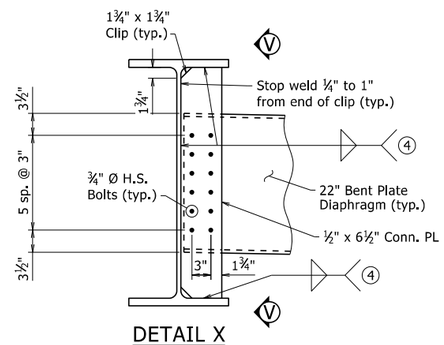

DETAIL X

1" = 1'-0"

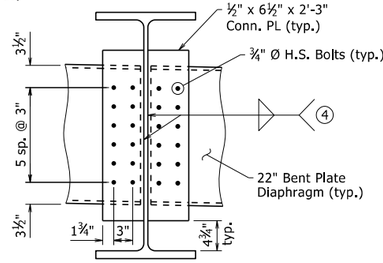

DETAIL Y

1" = 1'-0"

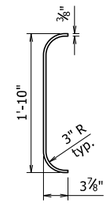

SECTION V-V

1" = 1'-0"

STATE OF ARKANSAS
LICENSED PROFESSIONAL ENGINEER
No. 9235
11/6/23
CHARLES R. ELLIS
BRIDGE ENGINEER

SHEET 1 OF 4
DETAILS OF 420'-0"
CONTINUOUS W-BEAM UNIT

ROUTE SEC.

ARKANSAS STATE HIGHWAY COMMISSION
LITTLE ROCK, ARK.

DRAWN BY: JCS DATE: 8/2021 FILENAME: b090523_s1.dgn
CHECKED BY: WAC DATE: 8/2023 SCALE: As Shown
DESIGNED BY: WAC DATE: 8/2020

BRIDGE NO. 07566 DRAWING NO. 64467

PRINT DATE: 10/20/2023

DATE REVISED	DATE REVISED	FED. NO. DIST. NO.	STATE	JOB NO.	SHEET NO.	TOTAL SHEETS
		6	ARK.	090523	57	103
		07566 - 420' UNIT - 64468				

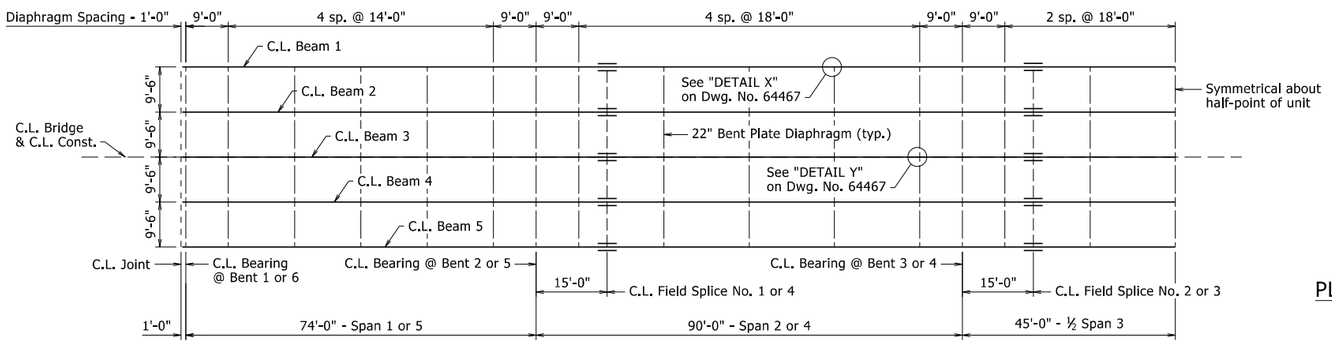

FRAMING PLAN

1/16" = 1'-0"

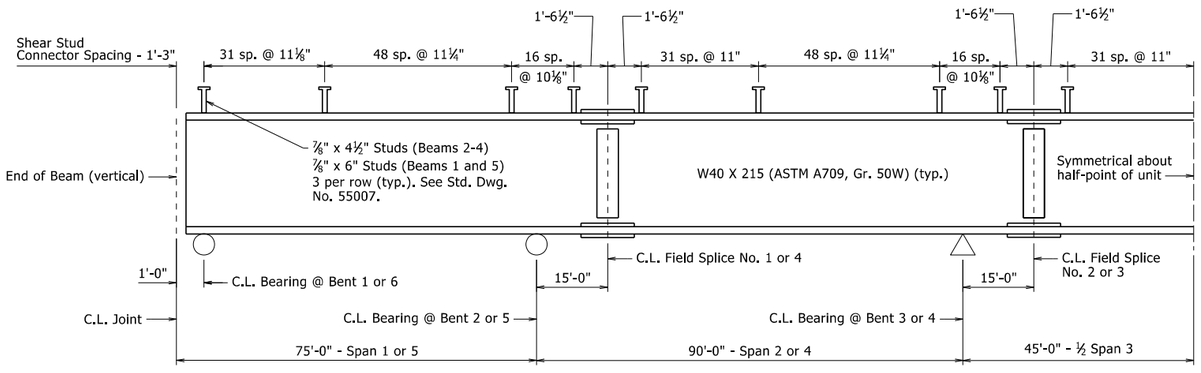

BEAM ELEVATION

No Scale

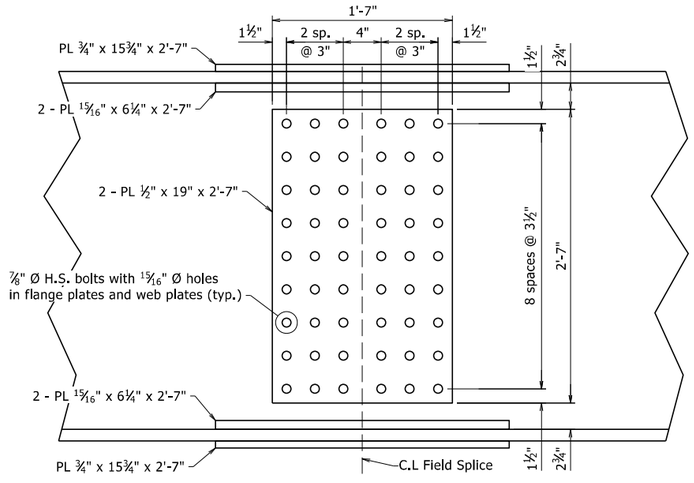

WEB SPLICE

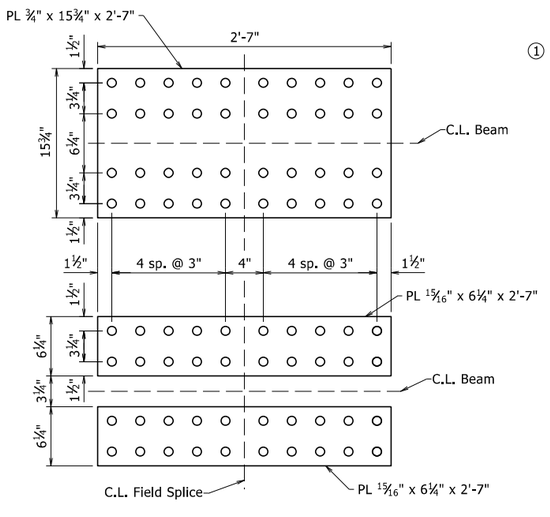

FLANGE SPLICE

DETAILS OF FIELD SPLICES

1½" = 1'-0"

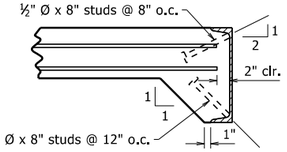

As an alternate to ⅝" Ø studs, ½" Ø x 8" studs spaced as shown may be used. Use weight of ⅝" Ø stud as basis of measurement of structural steel in anchors.

DETAILS OF ALTERNATE ANCHORS AND PLACEMENT OF LONGITUDINAL REINFORCING

1" = 1'-0"

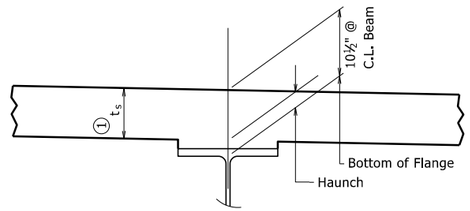

INTERIOR BEAM

t_s = slab thickness. See "TYPICAL ROADWAY SECTION", Dwg. No. 64467.

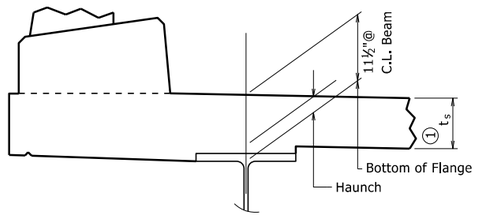

EXTERIOR BEAM

① Tolerance when removable deck forming is used is +½", -¼". Haunch forming is required and shall be adjusted to maintain slab thickness tolerance.

Haunch dimension may vary within the following limits to maintain the grade and slab thickness tolerance: Minimum occurs when top flange contacts bottom reinforcing steel; Maximum = top flange thickness plus 1¾" unless otherwise noted in the plans. No increase in concrete and structural steel quantities will be made to maintain tolerances.

Tolerances shown are applicable only when removable deck forming is used. See Std. Dwg. No. 55005 for tolerances when permanent steel deck forms are used. Payment for concrete shall be based on removable deck forming.

ADJUSTMENT FOR SLAB THICKNESS TOLERANCE

No Scale

TABLE OF DEAD LOAD DEFLECTIONS (INCHES)

SPAN	POINT OF DEFLECTION	STRUCTURAL STEEL		STRUCTURAL STEEL + SLAB		STRUCTURAL STEEL + SLAB + RAILING	
		EXT. BEAM	INT. BEAM	EXT. BEAM	INT. BEAM	EXT. BEAM	INT. BEAM
1	0	0	0	0	0	0	0
	0.1	0.054	0.057	0.275	0.317	0.300	0.341
	0.2	0.099	0.105	0.507	0.586	0.554	0.630
	0.3	0.131	0.138	0.667	0.770	0.728	0.828
	0.4	0.144	0.153	0.737	0.851	0.805	0.915
	0.5	0.140	0.148	0.714	0.824	0.780	0.886
	0.6	0.119	0.126	0.607	0.701	0.663	0.754
	0.7	0.086	0.091	0.439	0.507	0.479	0.545
	0.8	0.048	0.051	0.247	0.285	0.270	0.306
	0.9	0.016	0.017	0.080	0.092	0.087	0.099
2	0	0	0	0	0	0	0
	0.1	0.016	0.017	0.081	0.094	0.088	0.101
	0.2	0.054	0.057	0.274	0.316	0.299	0.340
	0.3	0.094	0.100	0.482	0.557	0.526	0.599
	0.4	0.125	0.132	0.636	0.734	0.694	0.789
	0.5	0.136	0.144	0.693	0.800	0.757	0.860
	0.6	0.125	0.133	0.640	0.739	0.699	0.795
	0.7	0.096	0.102	0.490	0.566	0.535	0.609
	0.8	0.055	0.059	0.283	0.327	0.309	0.352
	0.9	0.017	0.018	0.088	0.101	0.096	0.109
3	0	0	0	0	0	0	0
	0.1	0.019	0.020	0.097	0.112	0.106	0.120
	0.2	0.059	0.062	0.301	0.348	0.329	0.374
	0.3	0.101	0.107	0.515	0.595	0.562	0.640
	0.4	0.132	0.139	0.672	0.776	0.734	0.834
	0.5	0.143	0.151	0.728	0.841	0.795	0.904

Symmetrical about half-point of unit

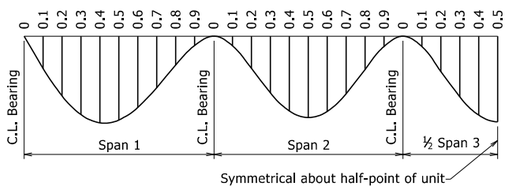

DEAD LOAD DEFLECTIONS DIAGRAM

No Scale

Camber for Dead Load Defelction ½" ⅛" tolerance. Deflections shown are along C.L. Beam from a chord from C.L. Bearing to C.L. Bearing. Negative sign (-) indicates point above chord. Vertical curve corrections not included.

STATE OF ARKANSAS
LICENSED PROFESSIONAL ENGINEER
No. 9235
11/6/23
CHARLES R. ELLIS

BRIDGE ENGINEER

SHEET 2 OF 4
DETAILS OF 420'-0"
CONTINUOUS W-BEAM UNIT

ROUTE SEC.

ARKANSAS STATE HIGHWAY COMMISSION

LITTLE ROCK, ARK.

DRAWN BY:	JCS	DATE:	8/2021	FILENAME:	b090523_s1.dgn
CHECKED BY:	WAC	DATE:	8/2023	SCALE:	As Shown
DESIGNED BY:	WAC	DATE:	8/2020		

BRIDGE NO. 07566 DRAWING NO. 64468

PRINT DATE: 10/20/2023

DATE REVISED	DATE REVISED	FED. RD. DIST. NO.	STATE	JOB NO.	SHEET NO.	TOTAL SHEETS
		6	ARK.	090523	58	103
		07566 - 420' UNIT - 64469				

(1) Placed as shown on "TYPICAL ROADWAY SECTION", Dwg. No. 64467.
(2) Closed on high side of bridge, Open on low side of bridge. Typical unless noted otherwise.
(3) Includes ¾" allowance for Architectural Finish. 2'-0" nominal width. See Dwg. No. 64473.

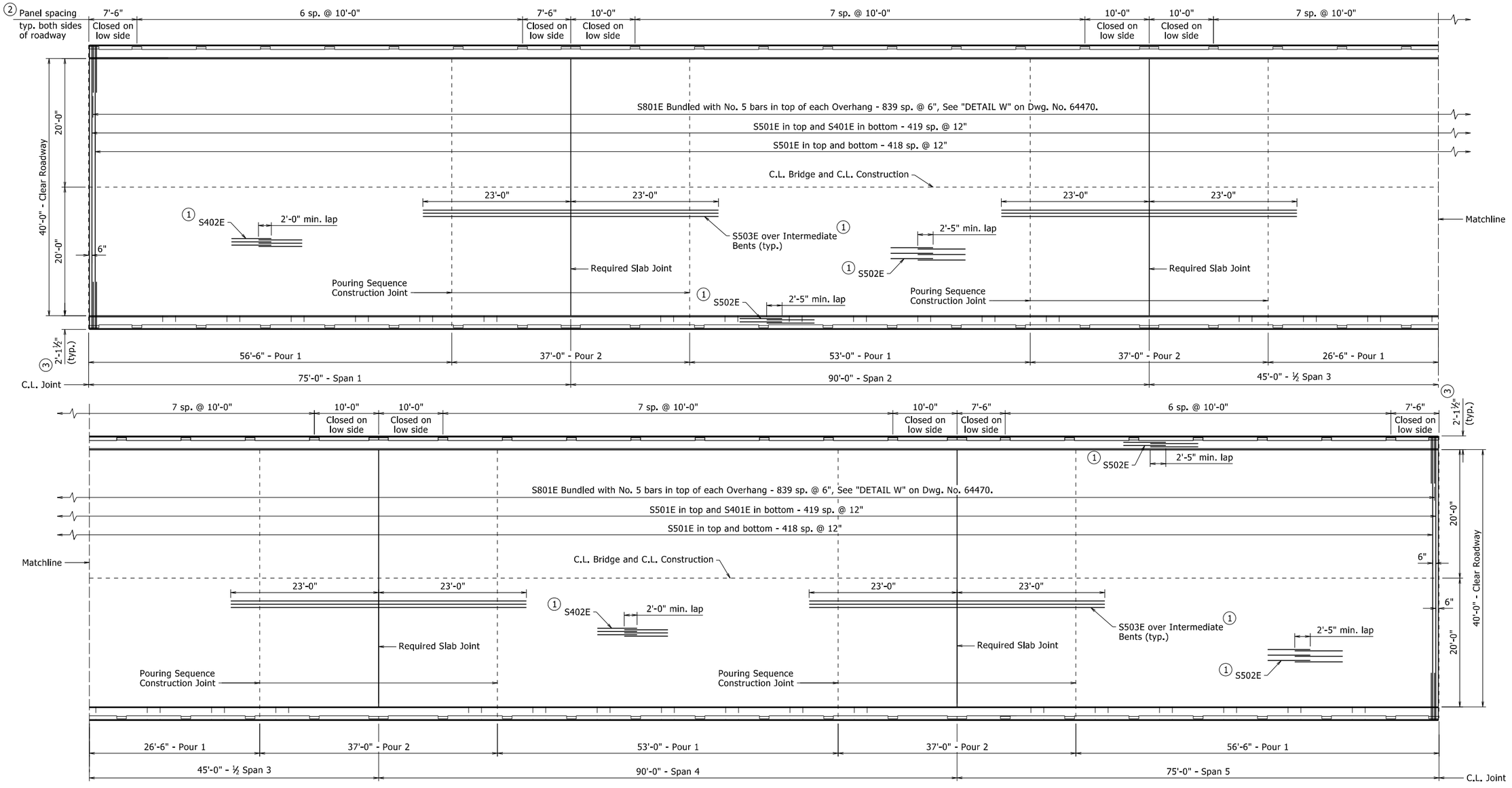

REINFORCING PLAN AND SLAB POURING SEQUENCE

⅛" = 1'-0"

Slab Pouring Sequence Notes:
Pours with the same number may be placed simultaneously or separately. All Pour(s) 1 must be placed before Pour(s) 2 can be placed. 48 hours shall elapse between the end of a pour and the start of the next pour. 72 hours shall elapse between adjacent pours.

Concrete in bridge superstructure shall be placed, consolidated and screeded off for the entire pour before any concrete has taken its initial set. This may require the use of a retarding agent.

A minimum of 72 hours shall elapse between completion of the slab and the pouring of the bridge railing. Any railing pours made before the entire slab unit has been placed must be approved by the Engineer.

NO DEVIATIONS FROM THE POURING SEQUENCE SHOWN WILL BE ALLOWED.

STATE OF ARKANSAS
LICENSED PROFESSIONAL ENGINEER
No. 9235
11/6/23
CHARLES R. ELLIS
BRIDGE ENGINEER

SHEET 3 OF 4
DETAILS OF 420'-0"
CONTINUOUS W-BEAM UNIT

ROUTE SEC.
ARKANSAS STATE HIGHWAY COMMISSION
LITTLE ROCK, ARK.

DRAWN BY: JCS DATE: 8/2021
CHECKED BY: WAC DATE: 8/2023
DESIGNED BY: WAC DATE: 8/2020
FILENAME: b090523_s1.dgn
SCALE: As Shown

BRIDGE NO. 07566 DRAWING NO. 64469

PRINT DATE: 10/20/2023

DATE REVISED	DATE REVISED	FED. ROAD DIST. NO.	STATE	JOB NO.	SHEET NO.	TOTAL SHEETS
		6	ARK.	090523	59	103
		07566 - 420' UNIT - 64470				

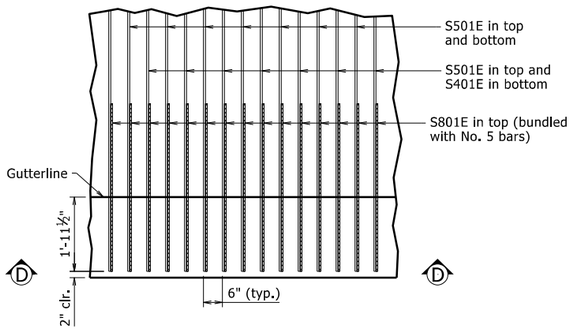

DETAIL W

½" = 1'-0"

BAR LIST

MARK	NO. REQ'D	LENGTH	P.D.	BENDING DIAGRAMS
S401E	420	43'-11"	Str.	
S402E	680	43'-9"	Str.	
S501E	1,258	43'-11"	Str.	
S502E	570	44'-2"	Str.	
S503E	184	46'-0"	Str.	
S801E	1,680	8'-2"	6"	7'-3" / 8" / S801E

Bars with an "E" suffix are to be epoxy coated.

Dimensions are out to out of bars.

POURED SILICONE JOINT DATA

Bent No.	"A" Width perpendicular to joint at 24 hour average temperature of:			"B" Width perpendicular to joint at 24 hour average temperature of:	"C" Width perpendicular to joint at 24 hour average temperature of:
	40°F	60°F	80°F	60°F	60°F
1 & 6	2⅞"	2½"	2⅛"	3"	2¼"

The temperature used to set the joint opening shall be the approximate average air temperature during the 24 hour period immediately before the bolts are tightened. The Engineer shall establish the temperature. Interpolation of the table may be necessary. Installation is limited to 40°F min. and 80°F max. The temperature limitations by the lubricant-adhesive manufacturer shall be observed.

See "STANDARD DETAILS FOR NEOPRENE STRIP SEAL JOINTS", Std. Dwg. No. 55009.

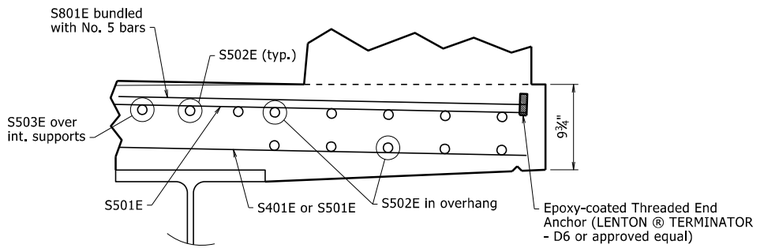

ALTERNATE OVERHANG DETAIL

No Scale

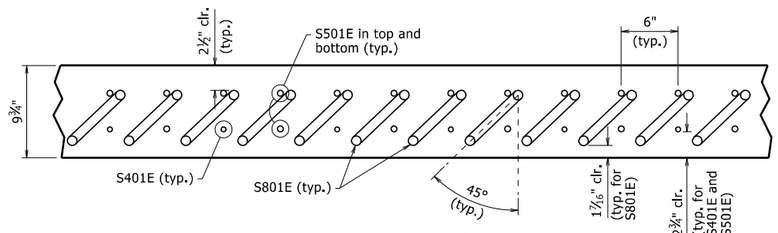

VIEW D-D

1½" = 1'-0"

STATE OF ARKANSAS
LICENSED PROFESSIONAL ENGINEER
No. 9235
11/6/23
CHARLES R. ELLIS

BRIDGE ENGINEER

SHEET 4 OF 4
DETAILS OF 420'-0"
CONTINUOUS W-BEAM UNIT

ROUTE SEC.

ARKANSAS STATE HIGHWAY COMMISSION

LITTLE ROCK, ARK.

DRAWN BY: JCS DATE: 8/2021 FILENAME: b090523_s1.dgn
CHECKED BY: WAC DATE: 8/2023 SCALE: As Shown
DESIGNED BY: WAC DATE: 8/2020

BRIDGE NO. 07566 DRAWING NO. 64470

PRINT DATE: 10/25/2023

DATE REVISED	RI 103	FED. RD. DIST. NO.	STATE	JOB NO.	SHEET NO.	TOTAL SHEETS
		6	ARK.	090523	60	103
		07566 -	RAILING	- 64471		

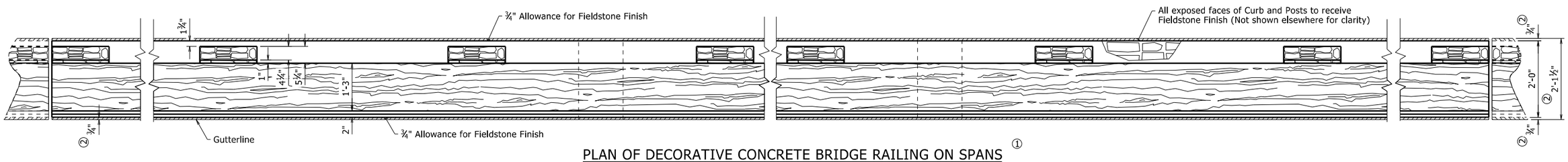

PLAN OF DECORATIVE CONCRETE BRIDGE RAILING ON SPANS ①

¾" = 1'-0"

See Dwg. No. 64473 for "VIEW A-A", "SECTION B-B", and "SECTION C-C".

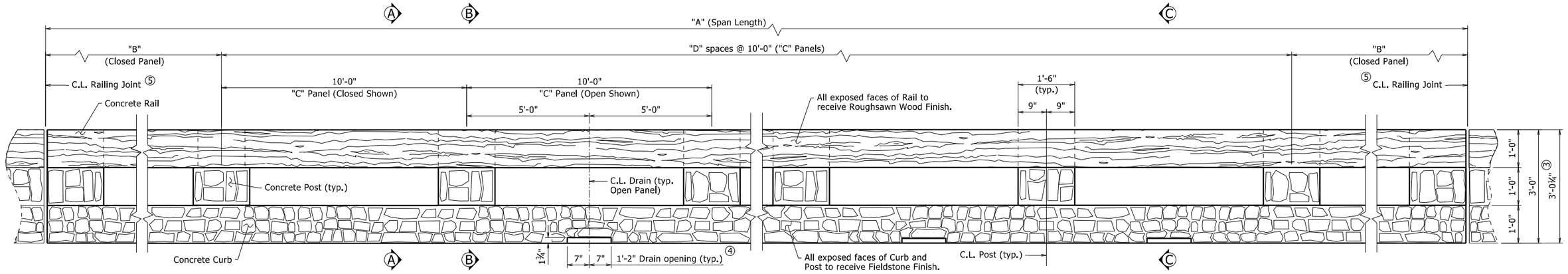

ELEVATION OF DECORATIVE CONCRETE BRIDGE RAILING ON SPANS (FROM TRAFFIC SIDE) ①

¾" = 1'-0"

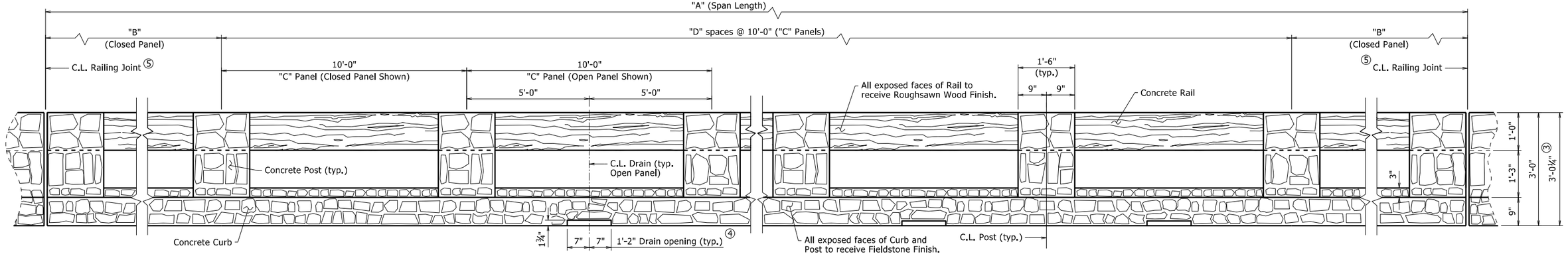

ELEVATION OF DECORATIVE CONCRETE BRIDGE RAILING ON SPANS (FROM BACK SIDE) ①

¾" = 1'-0"

TABLE OF VARIABLES

Variable	420'-0" Unit			
	75'-0" Span		90'-0" Span	
	High Side	Low Side	High Side	Low Side
"A"	75'-0"	75'-0"	90'-0"	90'-0"
"B"	7'-6"	7'-6"	10'-0"	10'-0"
"C"	Closed	Open	Closed	Open
"D"	6	6	7	7

① Unless noted otherwise, Railing component (Rail, Post, and Curb) dimensions do not include additional allowance for architectural finish. See Dwg. No. 64473 for details of architectural finish.

② Dimension includes ¾" allowance for Fieldstone Finish. See Dwg. No. 64473 for details of architectural finish.

③ Dimension includes ¼" allowance for Roughsawn Wood. See Dwg. No. 64473 for details of architectural finish.

④ Each Open Panel shall have a 1'-2" x 1¾" Drain opening.

⑤ See Dwg. No. 64472 for Expansion Joint details.

STATE OF ARKANSAS
LICENSED PROFESSIONAL ENGINEER
No. 9235
11/6/23
CHARLES R. ELLIS
BRIDGE ENGINEER

SHEET 1 OF 4
DETAILS OF DECORATIVE CONCRETE BRIDGE RAILING

ROUTE SEC.

ARKANSAS STATE HIGHWAY COMMISSION
LITTLE ROCK, ARK.

DRAWN BY: WAC DATE: 8/2021 FILENAME: b090523_rail.dgn
CHECKED BY: DBS DATE: 8/20/2021 SCALE: As Shown
DESIGNED BY: WAC DATE: 2/2021

BRIDGE NO. 07566 DRAWING NO. 64471

PRINT DATE: 10/20/2023

DATE REVISED	DATE REVISED	FED. RD. DIST. NO.	STATE	JOB NO.	SHEET NO.	TOTAL SHEETS
		6	ARK.	090523	61	103
		07566 -	RAILING	- 64472		

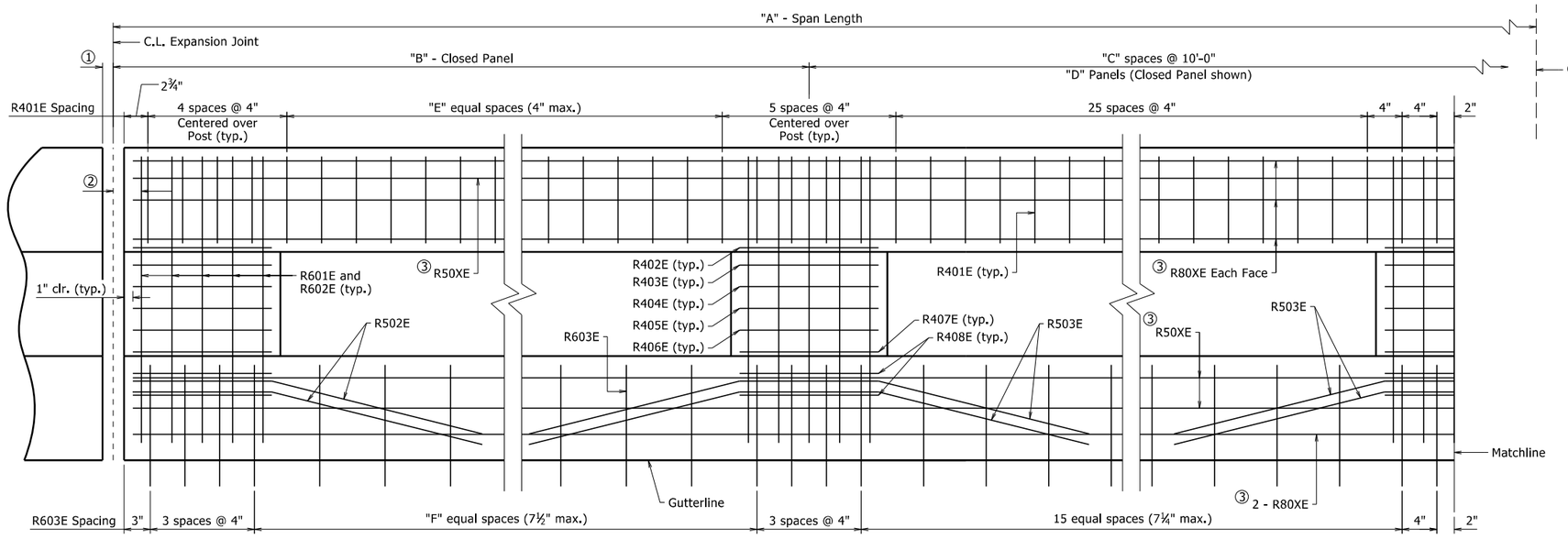

① 1¼" at Expansion Joints; ½" at Railing Joints

② 4" at Expansion Joints; 3¼" at Railing Joints

③ 2'-5" min. lap for No. 5 bars; 4'-2" min. lap for No. 8 bars.

TABLE OF VARIABLES

Variable	420'-0" Unit			
	75'-0" Span		90'-0" Span	
	High Side	Low Side	High Side	Low Side
"A"	75'-0"	75'-0"	90'-0"	90'-0"
"B"	7'-6"	7'-6"	10'-0"	10'-0"
"C"	6	6	7	7
"D"	Closed	Open	Closed	Open
"E"	15	15	23	23
"F"	9	9	14	14
R50XE	R501E		R504E	
R80XE	R801E		R802E	

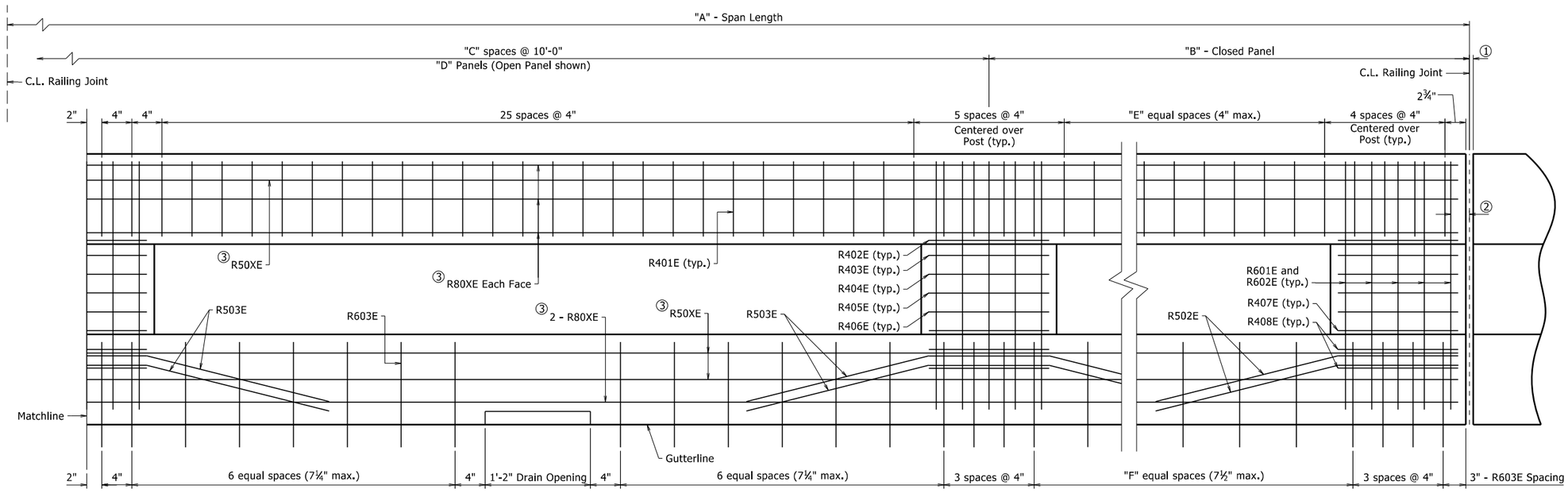

PARTIAL - LONGITUDINAL SECTION OF DECORATIVE PARAPET RAILING ON SPANS

1½" = 1'-0"

STATE OF ARKANSAS
LICENSED PROFESSIONAL ENGINEER
No. 9235
11/6/23
CHARLES R. ELLIS
BRIDGE ENGINEER

SHEET 2 OF 4
DETAILS OF DECORATIVE CONCRETE BRIDGE RAILING

ROUTE SEC.

ARKANSAS STATE HIGHWAY COMMISSION

LITTLE ROCK, ARK.

DRAWN BY: WAC DATE: 8/2021
CHECKED BY: DBS DATE: 8/20/2021
DESIGNED BY: WAC DATE: 2/2021
FILENAME: b090523_rail.dgn
SCALE: As Shown

BRIDGE NO. 07566 DRAWING NO. 64472

PRINT DATE: 10/20/2023

DATE REVISED	DATE REVISED	FED. ROAD DIST. NO.	STATE	JOB NO.	SHEET NO.	TOTAL SHEETS
		6	ARK.	090523	62	103
		07566 - RAILING - 64473				

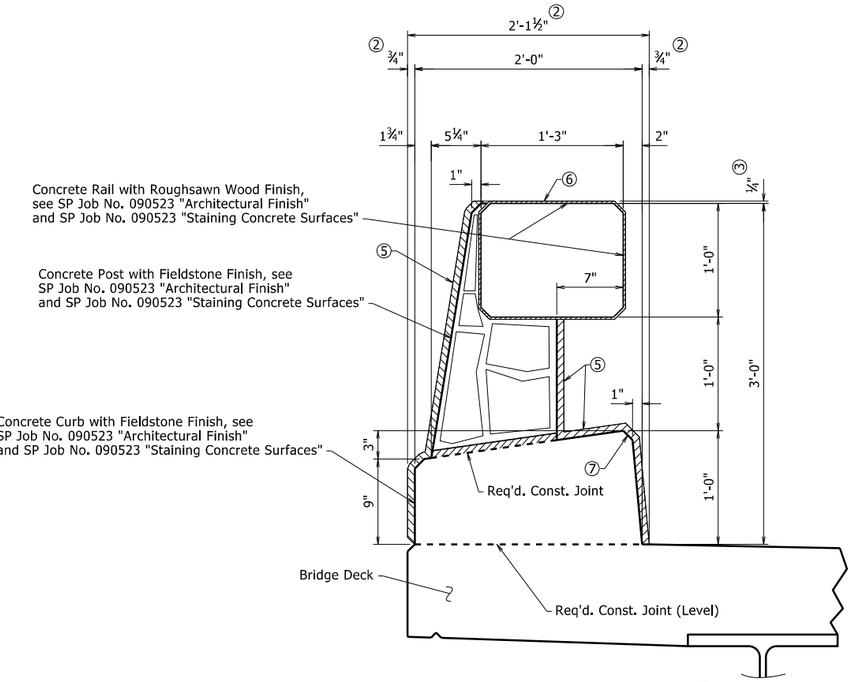

SECTION A-A ①

1½" = 1'-0"

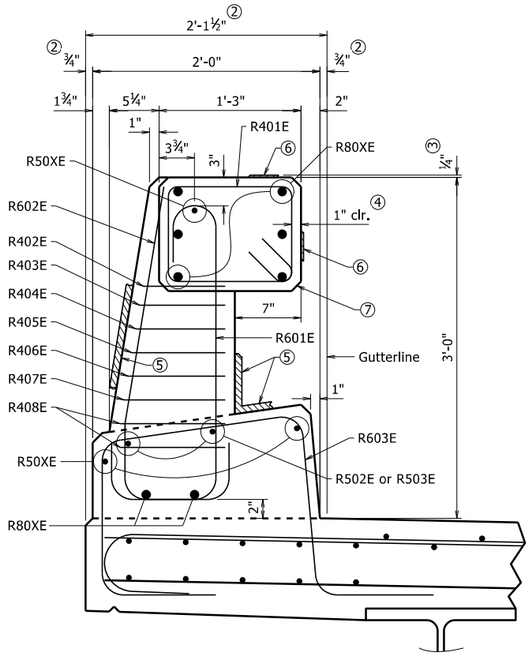

SECTION B-B ①

1½" = 1'-0"

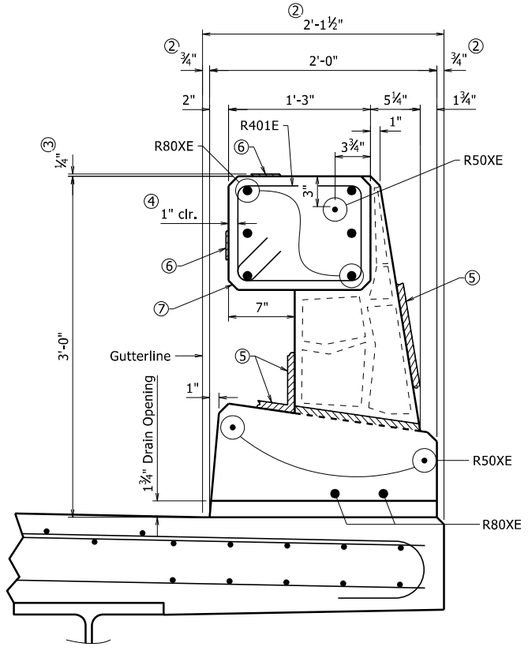

SECTION C-C ①

1½" = 1'-0"

Open Panel Shown

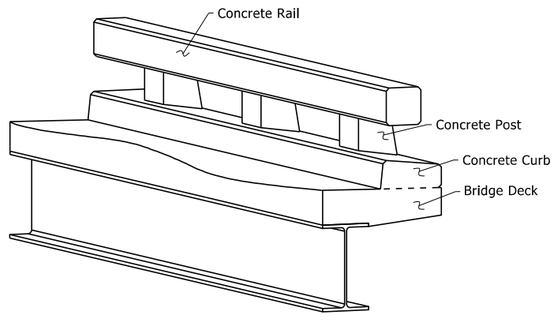

THREE DIMENSIONAL VIEW OF DECORATIVE CONCRETE BRIDGE RAILING

No Scale

BAR LIST

Mark	No. Req'd.	Length	"A"	P.D.
R401E	2,516	4'-4"	-	2"
R402E	96	4'-7"	8½"	2"
R403E	96	4'-8"	9"	2"
R404E	96	4'-9"	9½"	2"
R405E	96	4'-10"	10"	2"
R406E	96	4'-11"	10½"	2"
R407E	96	4'-11½"	10¾"	2"
R408E	192	5'-0"	11"	2"
R501E	24	39'-0"	-	Str.
R502E	40	4'-5"	-	3¾"
R503E	152	7'-5"	-	3¾"
R504E	54	32'-1"	-	Str.
R601E	480	4'-5½"	-	4½"
R602E	480	3'-11¾"	-	4½"
R603E	1,486	6'-1¼"	-	4½"
R801E	64	40'-6"	-	Str.
R802E	96	48'-1"	-	Str.

BENDING DIAGRAMS

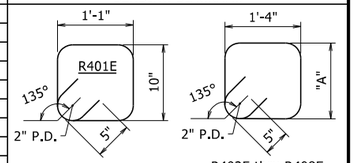

R402E thru R408E

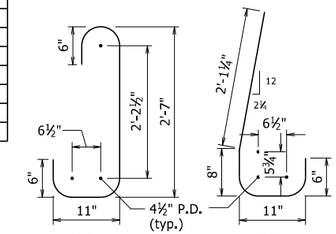

R601E R602E

Bars with an "E" suffix are to be epoxy coated.

Dimensions are out to out of bars.

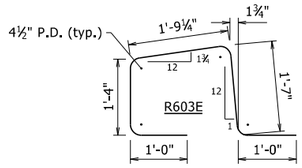

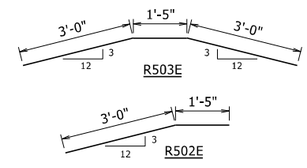

TABLE OF VARIABLES

Variable	75'-0" Span	90'-0" Span
R50XE	R501E	R504E
R80XE	R801E	R802E

① Unless noted otherwise, Railing component (Rail, Post, and Curb) dimensions do not include additional allowance for architectural finish.

② Dimension includes ¾" allowance for Fieldstone Finish.

③ Dimension includes ¼" allowance for Roughsawn Wood Finish.

④ A typical clear cover of 1" shall be provided for the Railing component (Rail, Post, and Curb) reinforcement, unless otherwise noted. This clear cover does not include any allowance for architectural finish.

⑤ ¾" allowance for Fieldstone Finish, typical for Post and Curb.

⑥ ¼" allowance for Roughsawn Wood Finish, typical for Rail.

⑦ All exposed corners for the Railing components (Rail, Post, and Curb) shall be chamfered 1" unless otherwise noted.

STATE OF ARKANSAS
LICENSED PROFESSIONAL ENGINEER
No. 9235
11/6/23
CHARLES R. ELLIS

BRIDGE ENGINEER

SHEET 3 OF 4
DETAILS OF DECORATIVE CONCRETE BRIDGE RAILING

ROUTE SEC.

ARKANSAS STATE HIGHWAY COMMISSION

LITTLE ROCK, ARK.

DRAWN BY: WAC DATE: 8/2021
CHECKED BY: DBS DATE: 8/20/2021
DESIGNED BY: WAC DATE: 2/2021
FILENAME: b090523_rail.dgn
SCALE: As Shown

BRIDGE NO. 07566 DRAWING NO. 64473

PRINT DATE: 10/20/2023

DATE REVISED	DATE REVISED	FED. RD. DIST. NO.	STATE	JOB NO.	SHEET NO.	TOTAL SHEETS
		6	ARK.	090523	63	103
		07566 -	RAILING	- 64474		

① Unless noted otherwise, Railing component (Curb and Wall) dimensions do not include additional allowance for architectural finish.

② Dimension includes ¾" allowance for Fieldstone Finish.

③ All exposed corners for the Railing components (Curb and Wall) shall be chamfered 1" unless otherwise noted.

④ ¾" allowance for Fieldstone Finish, typical for Curb.

⑤ Exposed faces of Concrete Wall to receive concrete stain only. No architecural finish.

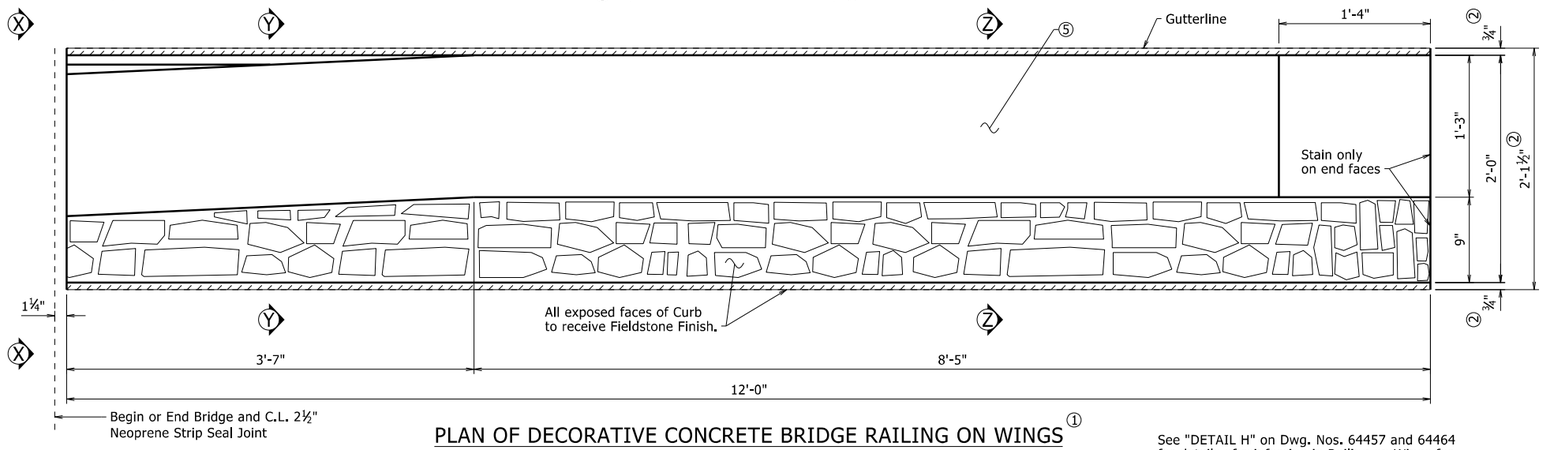

PLAN OF DECORATIVE CONCRETE BRIDGE RAILING ON WINGS ①

1½" = 1'-0"

See "DETAIL H" on Dwg. Nos. 64457 and 64464 for details of reinforcing in Railing on Wings for Bents 1 and 6, respectively.

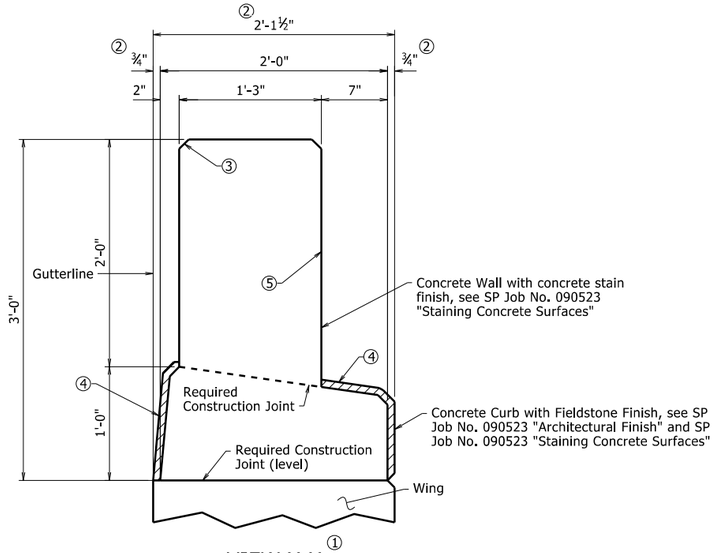

VIEW X-X ①

1½" = 1'-0"

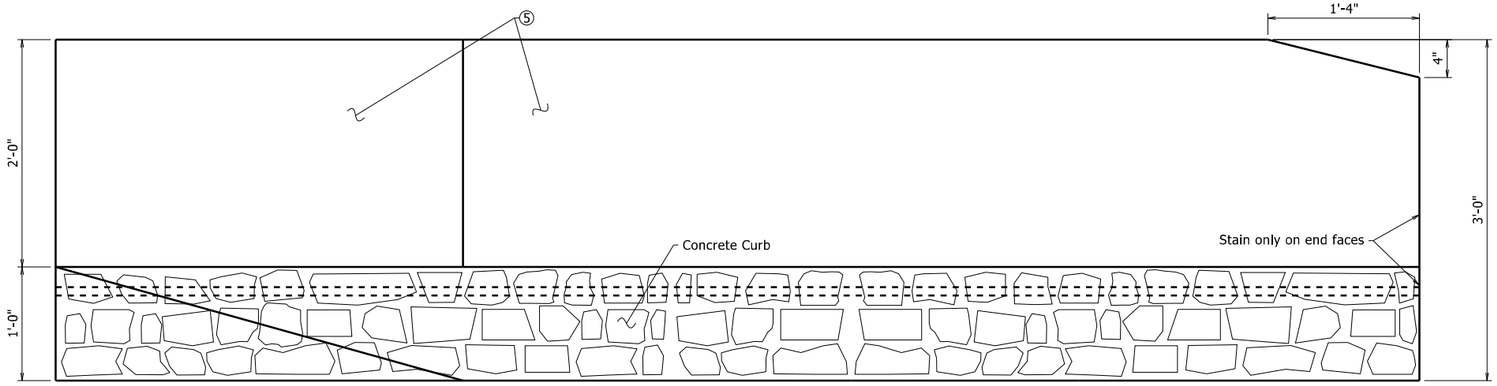

ELEVATION OF DECORATIVE CONCRETE BRIDGE RAILING ON WINGS (TRAFFIC SIDE) ①

1½" = 1'-0"

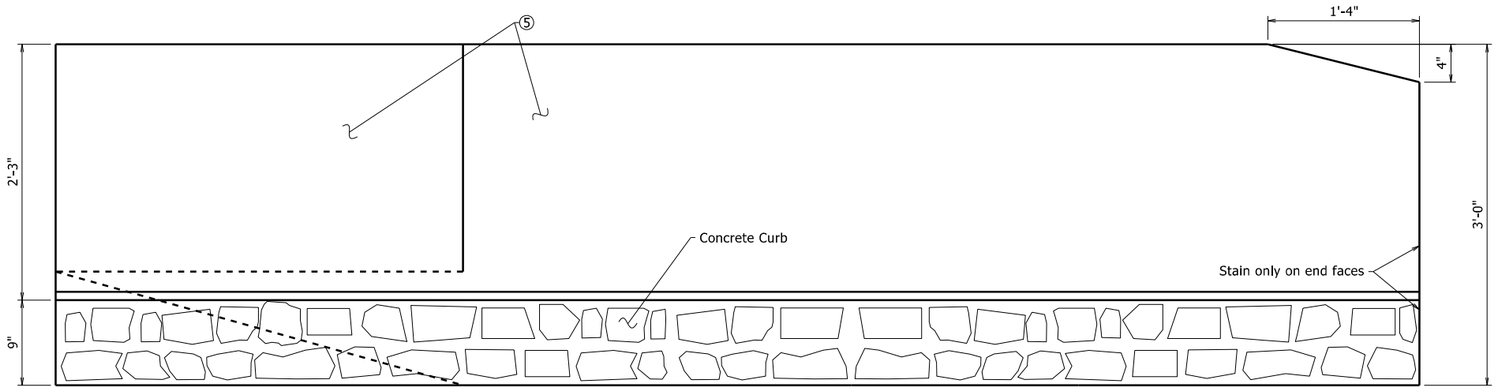

ELEVATION OF DECORATIVE CONCRETE BRIDGE RAILING ON WINGS (BACK SIDE) ①

1½" = 1'-0"

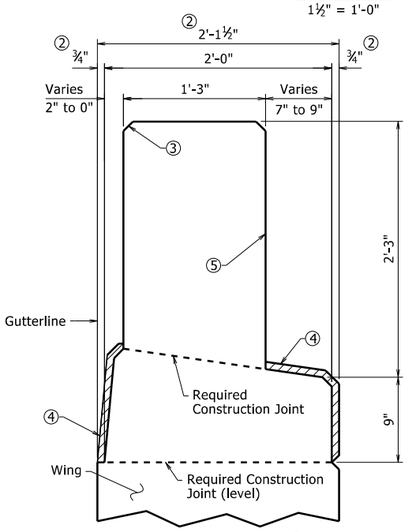

SECTION Y-Y ①

1½" = 1'-0"

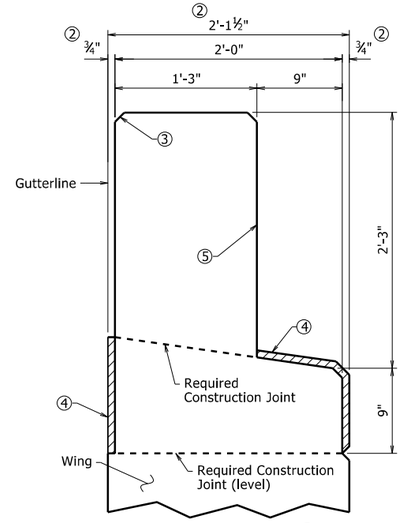

SECTION Z-Z ①

1½" = 1'-0"

STATE OF ARKANSAS
LICENSED PROFESSIONAL ENGINEER
No. 9235
11/6/23
CHARLES R. ELLIS

BRIDGE ENGINEER

SHEET 4 OF 4
DETAILS OF DECORATIVE CONCRETE BRIDGE RAILING

ROUTE SEC.

ARKANSAS STATE HIGHWAY COMMISSION

LITTLE ROCK, ARK.

DRAWN BY: WAC DATE: 8/2021 FILENAME: b090523_rail.dgn

CHECKED BY: DBS DATE: 8/20/2021 SCALE: As Shown

DESIGNED BY: WAC DATE: 2/2021

BRIDGE NO. 07566 DRAWING NO. 64474

PRINT DATE: 10/20/2023

DATE REVISED	DATE REVISED	FED. RD. DIST. NO.	STATE	JOB NO.	SHEET NO.	TOTAL SHEETS
		6	ARK.	090523	64	103
		07566 - TYPE 1 SPECIAL GUTTERS - 64475				

1. Construct gutter curb with height-transition as shown if drop inlet is not placed at end of gutter.

   Construct gutter curb full height (no height-transition) if drop inlet is placed at end of gutter. Curb height transition placed on drop inlet. See drop inlet details.

2. For Railing dimensions, refer to "SECTION U-U", "SECTION V-V", and "SECTION W-W", Dwg. No. 64458.

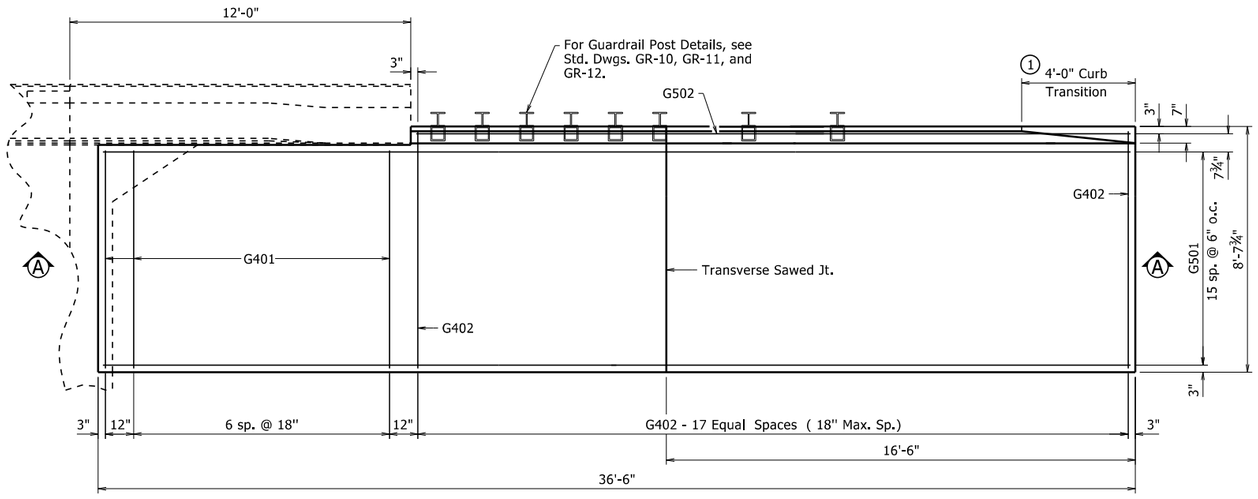

HALF PLAN OF APPROACH GUTTERS

⅜" = 1'-0"

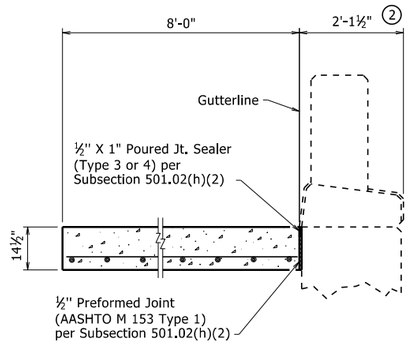

SECTION B-B

No scale

BAR LIST FOR ONE TYPE 1 SPECIAL APPROACH GUTTER

Mark	No. Req'd.	Length
G401	8	7'-8"
G402	18	8'-3"
G501	16	36'-2"
G502	1	25'-2"

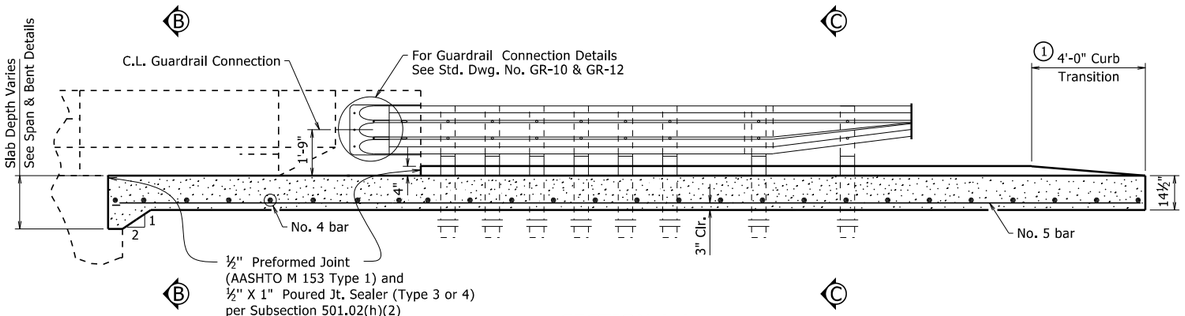

SECTION A-A

⅜" = 1'-0"

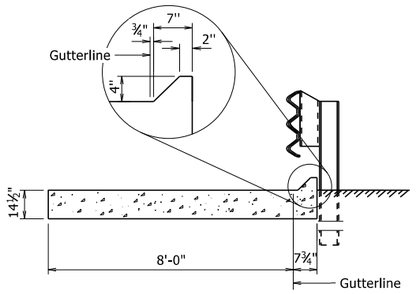

SECTION C-C

No scale

QUANTITIES FOR ONE TYPE 1 SPECIAL APPROACH GUTTER

(FOR INFORMATION ONLY)

Reinforcing Steel (Lbs.)	Concrete (Cu. Yds.)
770	14.00

GENERAL NOTES

All concrete shall be Class S or Class S(AE) or mixture used for Portland Cement Concrete Pavement and shall be poured in the dry.

All reinforcing steel shall be Grade 60 (yield strength = 60,000 psi) conforming to AASHTO M 31 or M 322, Type A, with mill test reports.

Approach Gutters will be measured and paid for in accordance with Section 504.

All longitudinal lines within limits of horizontal curves shall be on curves concentric to C.L. Construction. Adjustment to longitudinal bar lengths may be required. Transverse reinforcing shall be placed on radial lines to C.L. Construction.

STATE OF ARKANSAS
LICENSED PROFESSIONAL ENGINEER
No. 9235
11/6/23
CHARLES R. ELLIS

BRIDGE ENGINEER

DETAILS OF TYPE 1 SPECIAL APPROACH GUTTERS

ROUTE SEC.

ARKANSAS STATE HIGHWAY COMMISSION

LITTLE ROCK, ARK.

DRAWN BY: DBS DATE: 8/4/2021 FILENAME: b090523_ag1.dgn
CHECKED BY: JWP DATE: 8/12/2021 SCALE: As Shown
DESIGNED BY: STD DATE: -

BRIDGE NO. 07566 DRAWING NO. 64475

PRINT DATE: 10/20/2023

DATE REVISED	DATE REVISED	FED.RD. DIST.NO.	STATE	JOB NO.	SHEET NO.	TOTAL SHEETS
		6	ARK.	090523	65	103
		CROSS SECTIONS				

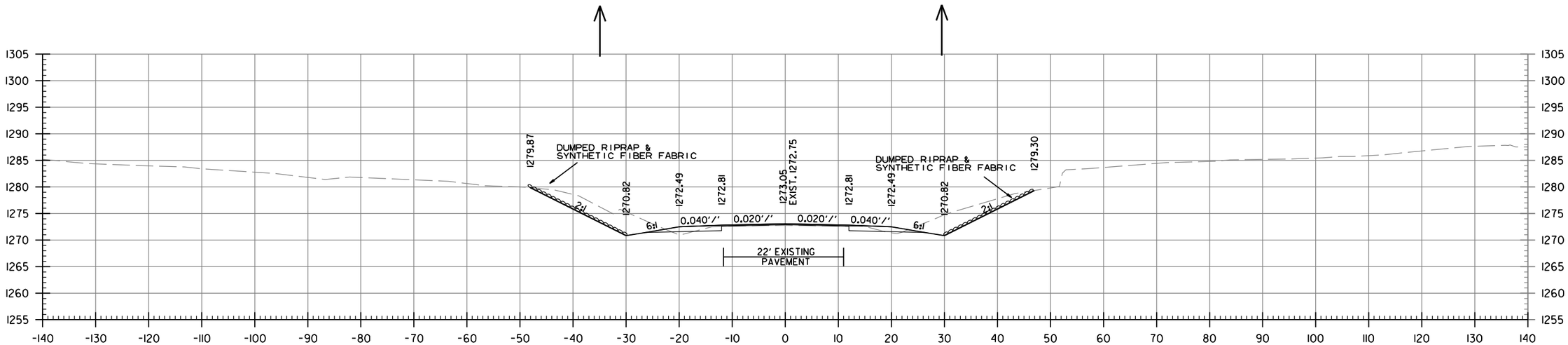

STAGE 1 AREA CUT 120 AREA FILL 2
STAGE 2 AREA CUT 0 AREA FILL 0

102+00
END 100' TRANSITION &
BEGIN JOB 090523

STAGE 1 CUT VOLUME 222 FILL VOLUME 4
STAGE 2 CUT VOLUME 0 FILL VOLUME 0

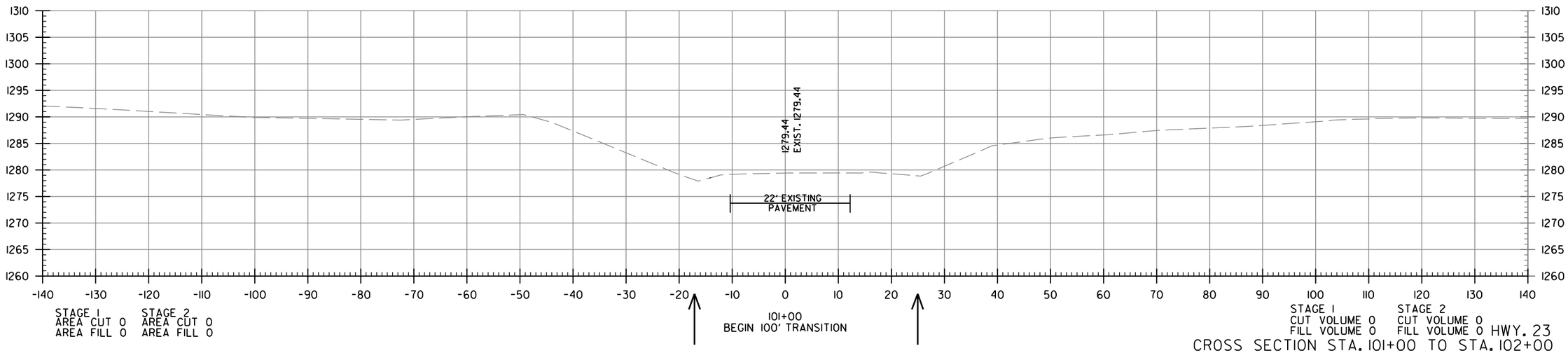

STAGE 1 AREA CUT 0 AREA FILL 0
STAGE 2 AREA CUT 0 AREA FILL 0

101+00
BEGIN 100' TRANSITION

STAGE 1 CUT VOLUME 0 FILL VOLUME 0
STAGE 2 CUT VOLUME 0 FILL VOLUME 0

HWY. 23
CROSS SECTION STA. 101+00 TO STA. 102+00

mh39735 7/13/2023
R090523.DGN

DATE REVISED	DATE REVISED	FED.RD. DIST.NO.	STATE	JOB NO.	SHEET NO.	TOTAL SHEETS
		6	ARK.	090523	66	103
		CROSS SECTIONS				

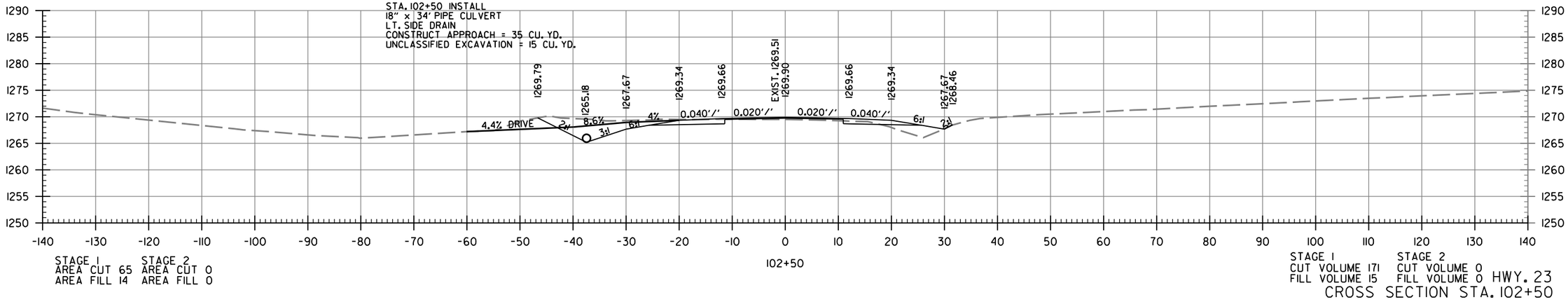

mh39735 7/13/2023
R090523.DGN

DATE REVISED	DATE REVISED	FED.RD. DIST.NO.	STATE	JOB NO.	SHEET NO.	TOTAL SHEETS
		6	ARK.	090523	67	103
		CROSS SECTIONS				

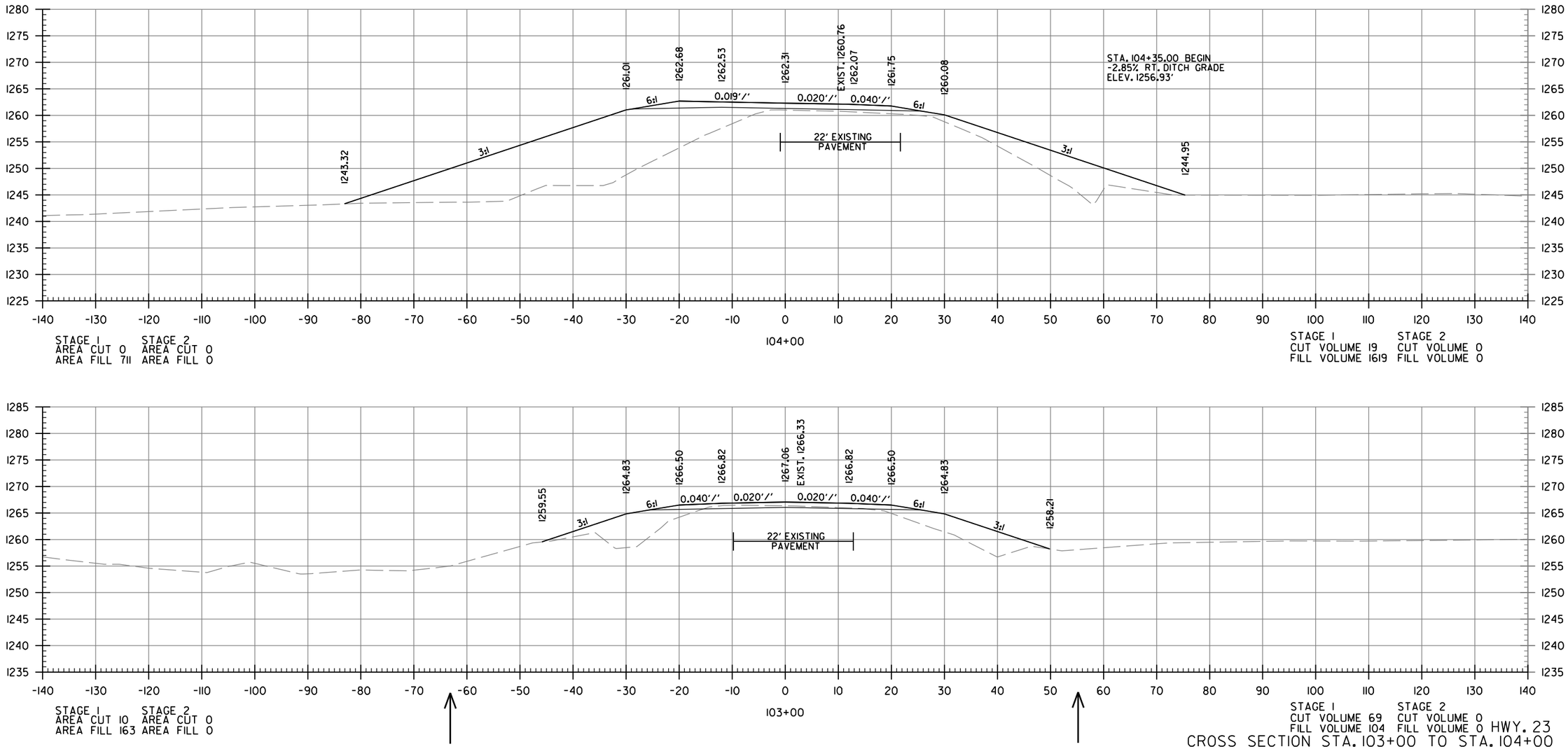

HWY. 23
CROSS SECTION STA. 103+00 TO STA. 104+00

mh39735 7/13/2023
R090523.DGN

DATE REVISED	DATE REVISED	FED.RD. DIST.NO.	STATE	JOB NO.	SHEET NO.	TOTAL SHEETS
		6	ARK.	090523	68	103
		CROSS SECTIONS				

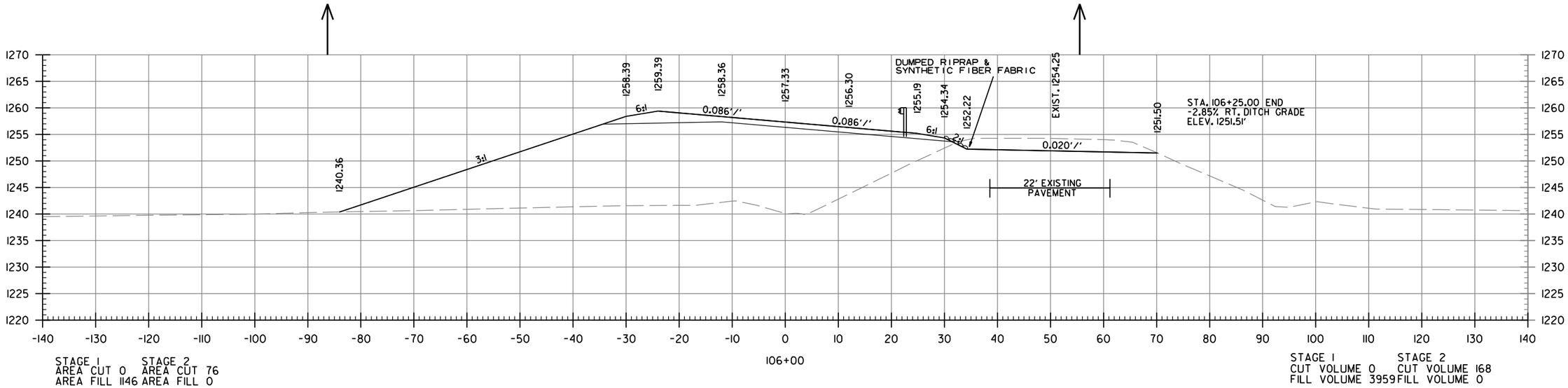

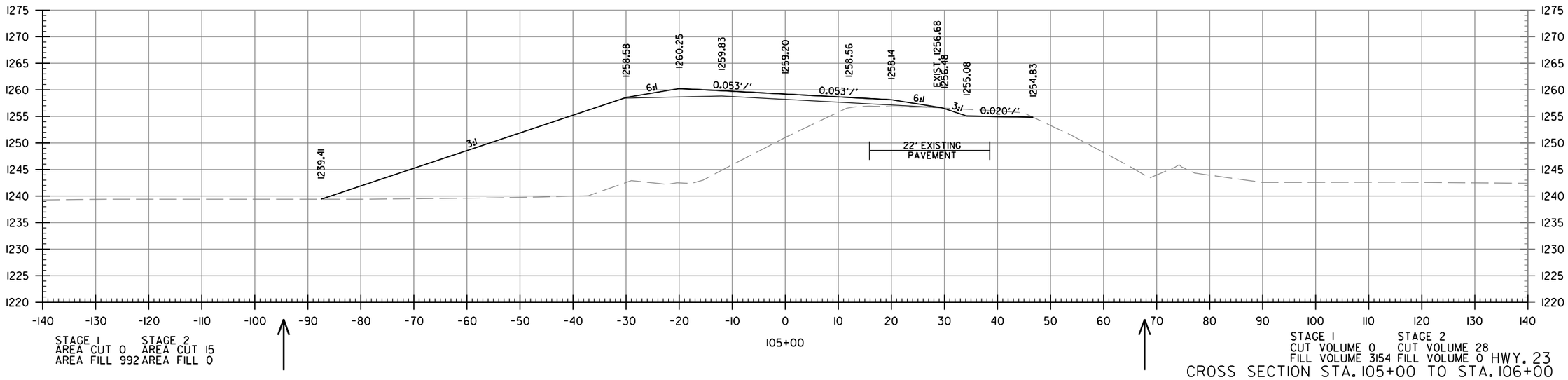

CROSS SECTION STA. 105+00 TO STA. 106+00

mh39735 7/13/2023
R090523.DGN

DATE REVISED	DATE REVISED	FED.RD. DIST.NO.	STATE	JOB NO.	SHEET NO.	TOTAL SHEETS
		6	ARK.	090523	69	103
		CROSS SECTIONS				

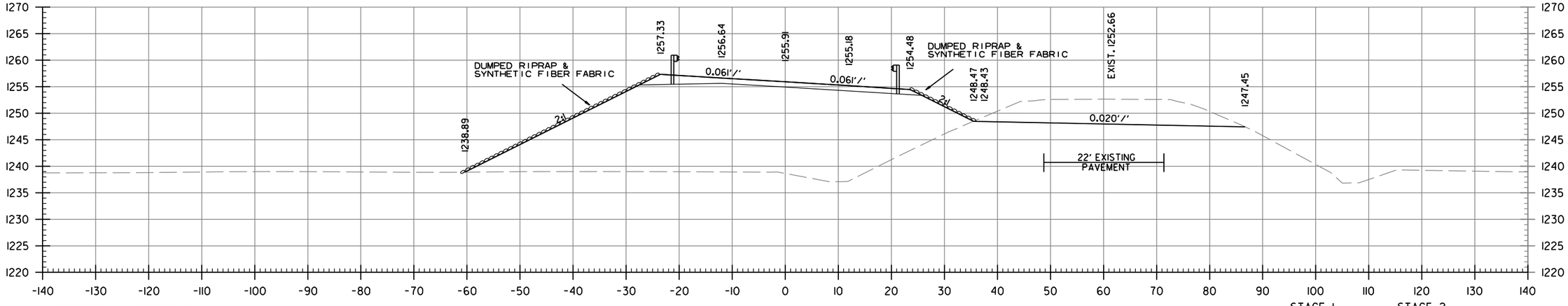

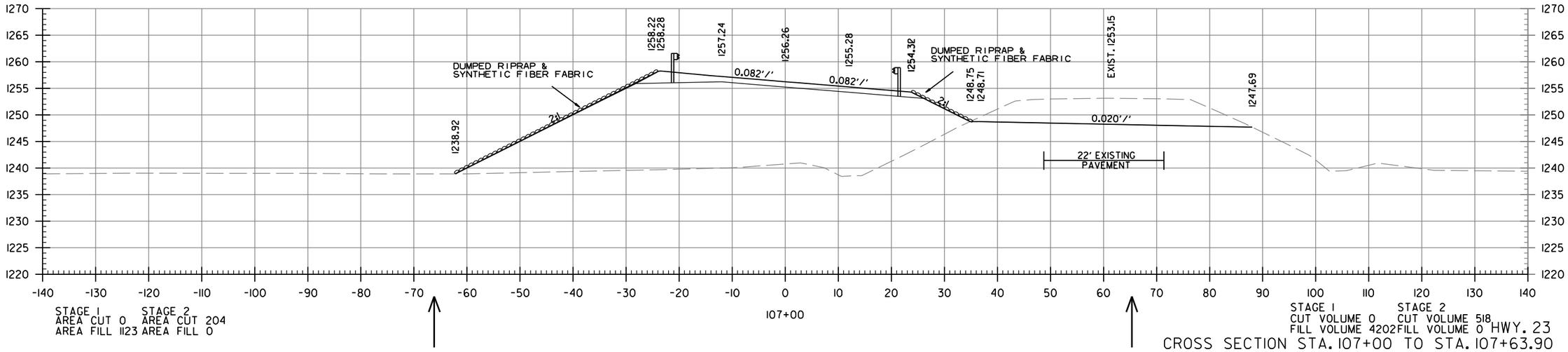

CROSS SECTION STA. 107+00 TO STA. 107+63.90

mh39735 7/13/2023
R090523.DGN

DATE REVISED	DATE REVISED	FED.RD. DIST.NO.	STATE	JOB NO.	SHEET NO.	TOTAL SHEETS
		6	ARK.	090523	70	103
		CROSS SECTIONS				

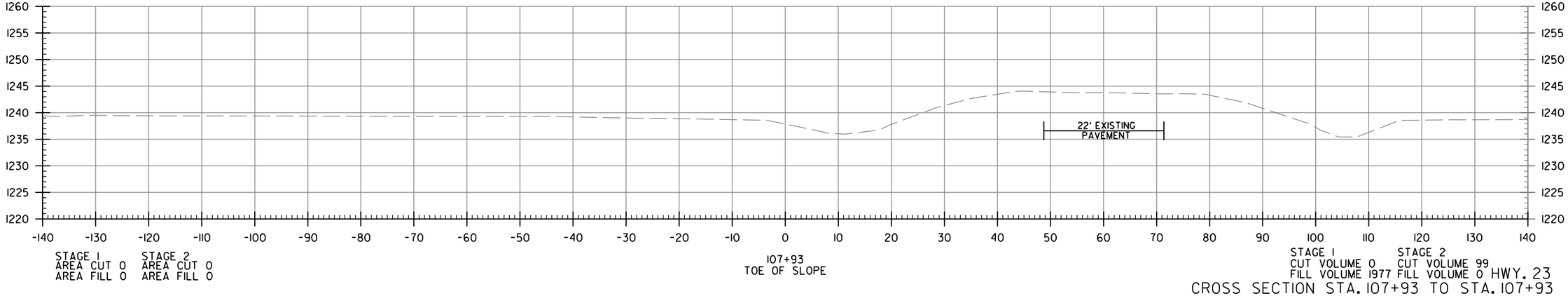

CROSS SECTION STA. 107+93 TO STA. 107+93 HWY. 23

mh39735 7/13/2023
R090523.DGN

DATE REVISED	DATE REVISED	FED.RD. DIST.NO.	STATE	JOB NO.	SHEET NO.	TOTAL SHEETS
		6	ARK.	090523	71	103
		CROSS SECTIONS				

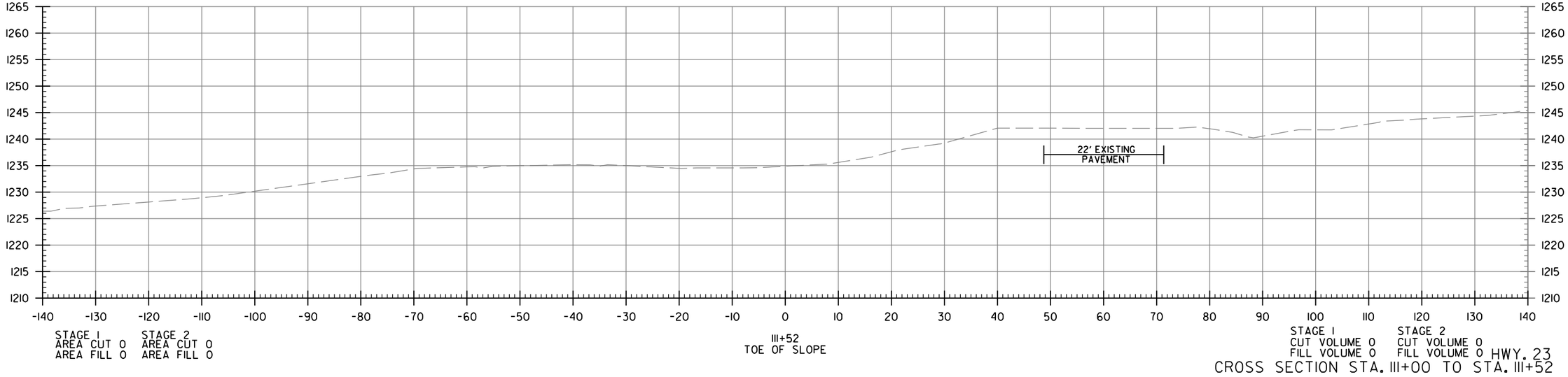

CROSS SECTION STA. 111+00 TO STA. 111+52 HWY. 23

mh39735 7/13/2023
R090523.DGN

DATE REVISED	DATE REVISED	FED.RD. DIST.NO.	STATE	JOB NO.	SHEET NO.	TOTAL SHEETS
		6	ARK.	090523	72	103
		CROSS SECTIONS				

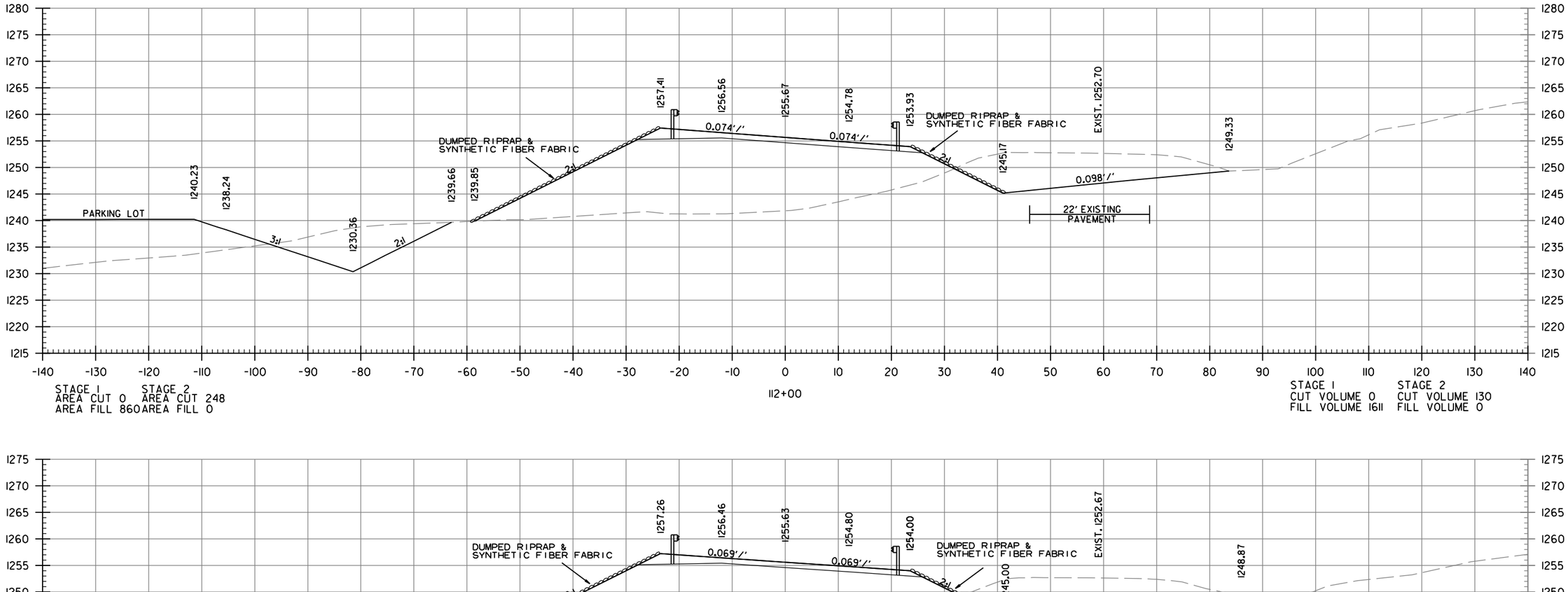

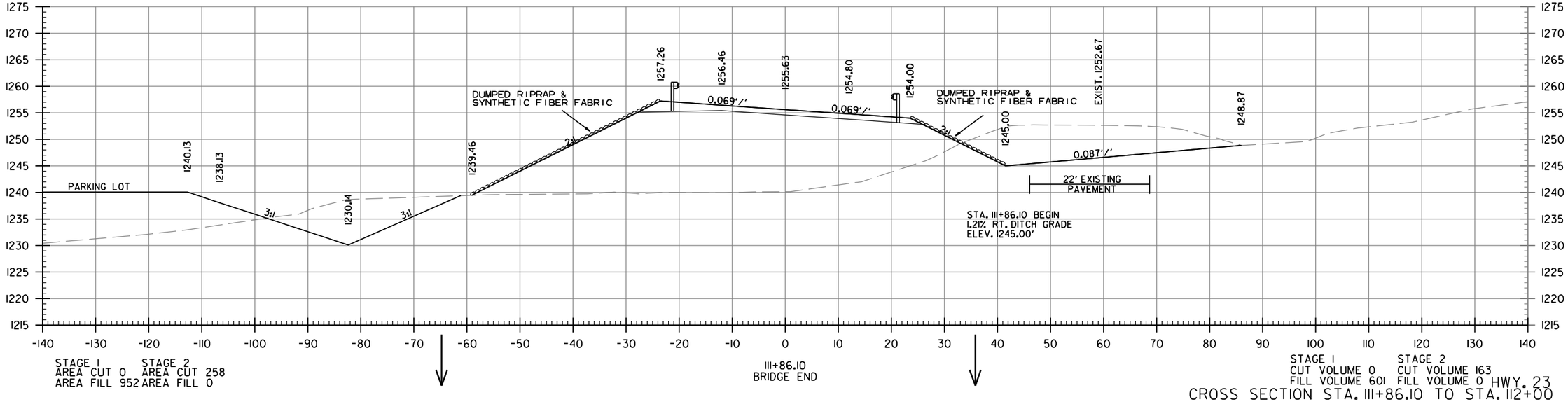

HWY. 23

CROSS SECTION STA. 111+86.10 TO STA. 112+00

mh39735 7/13/2023
R090523.DGN

DATE REVISED	DATE REVISED	FED.RD. DIST.NO.	STATE	JOB NO.	SHEET NO.	TOTAL SHEETS
		6	ARK.	090523	73	103
		CROSS SECTIONS				

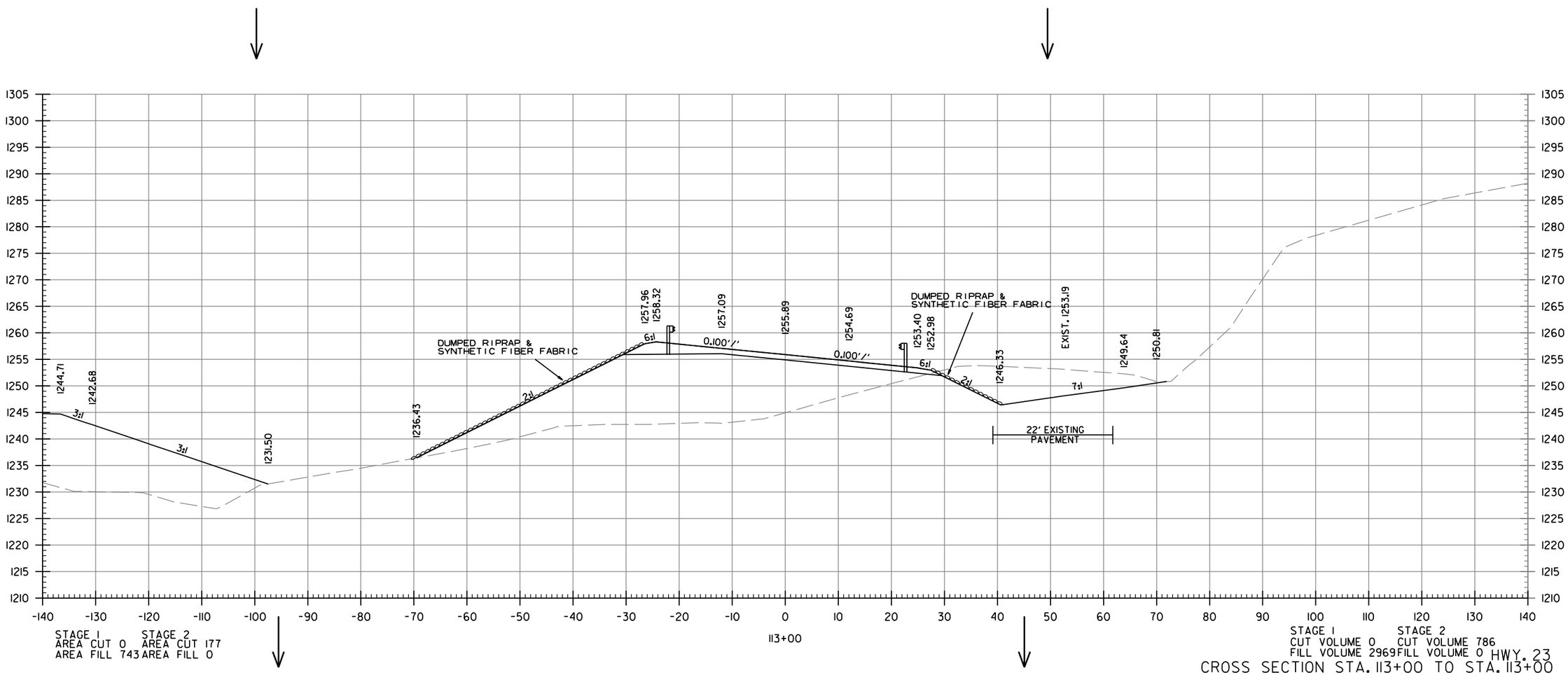

STAGE 1 STAGE 2
AREA CUT 0 AREA CUT 177
AREA FILL 743 AREA FILL 0

STAGE 1 STAGE 2
CUT VOLUME 0 CUT VOLUME 786
FILL VOLUME 2969 FILL VOLUME 0

CROSS SECTION STA. 113+00 TO STA. 113+00 HWY. 23

mh39735 7/13/2023
R090523.DGN

DATE REVISED	DATE REVISED	FED.RD. DIST.NO.	STATE	JOB NO.	SHEET NO.	TOTAL SHEETS
		6	ARK.	090523	74	103
		CROSS SECTIONS				

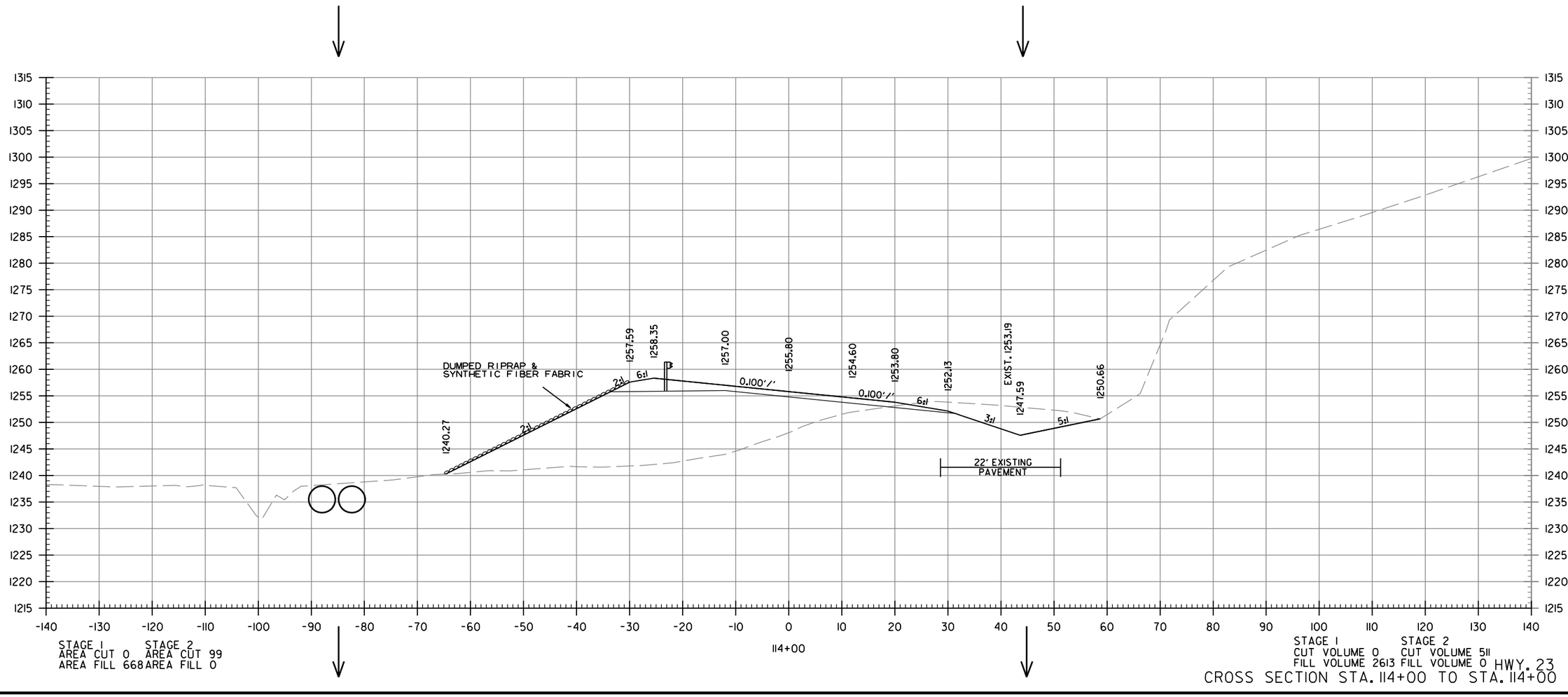

STAGE 1 AREA CUT 0 AREA FILL 668
STAGE 2 AREA CUT 99 AREA FILL 0

STAGE 1 CUT VOLUME 0 FILL VOLUME 2613
STAGE 2 CUT VOLUME 511 FILL VOLUME 0

CROSS SECTION STA. 114+00 TO STA. 114+00 HWY. 23

mh39735 7/13/2023
R090523.DGN

DATE REVISED	DATE REVISED	FED.RD. DIST.NO.	STATE	JOB NO.	SHEET NO.	TOTAL SHEETS
		6	ARK.	090523	75	103
		CROSS SECTIONS				

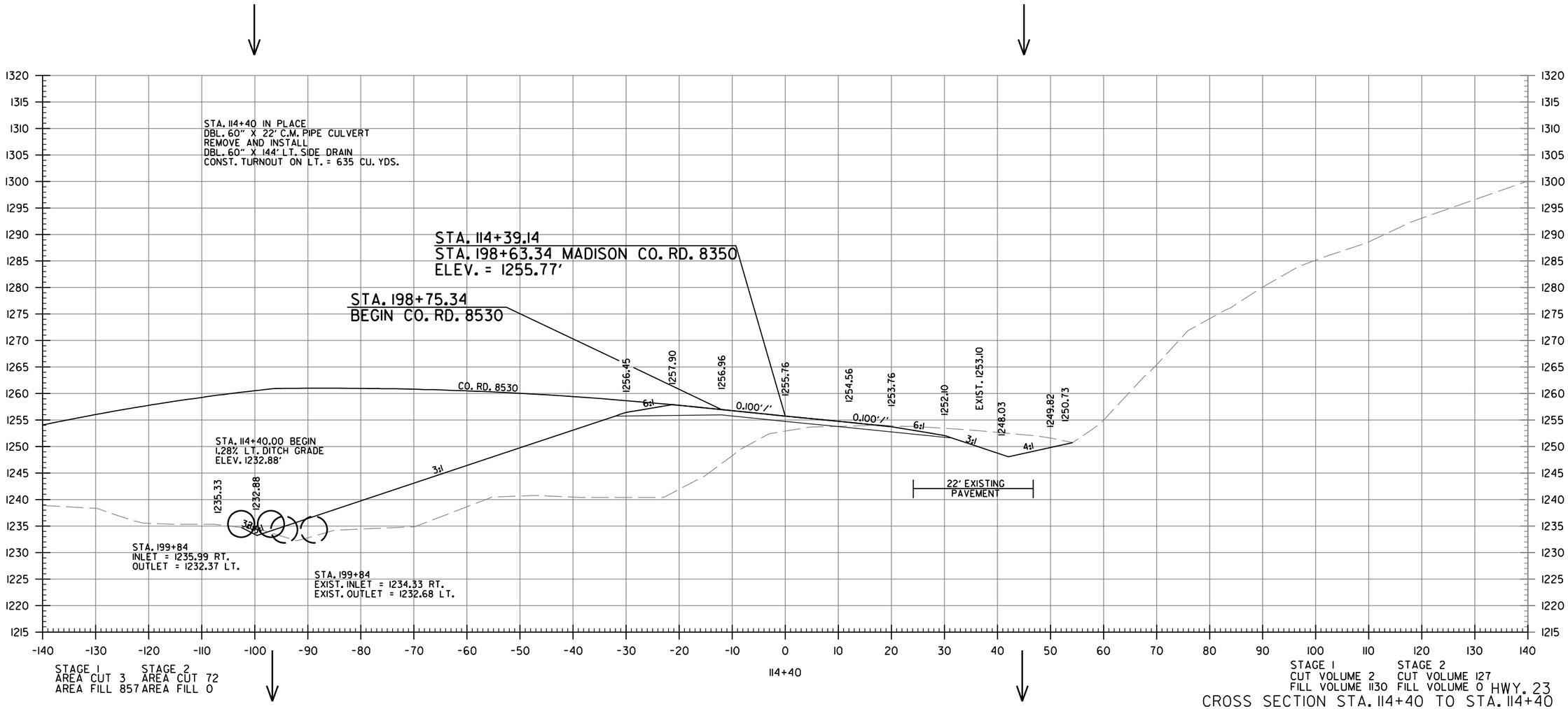

STAGE 1 AREA CUT 3 AREA FILL 857
STAGE 2 AREA CUT 72 AREA FILL 0

STAGE 1 CUT VOLUME 2 FILL VOLUME 1130
STAGE 2 CUT VOLUME 127 FILL VOLUME 0

CROSS SECTION STA. 114+40 TO STA. 114+40 HWY. 23

mh39735 7/13/2023
R090523.DGN

DATE REVISED	DATE REVISED	FED.RD. DIST.NO.	STATE	JOB NO.	SHEET NO.	TOTAL SHEETS
		6	ARK.	090523	76	103
		CROSS SECTIONS				

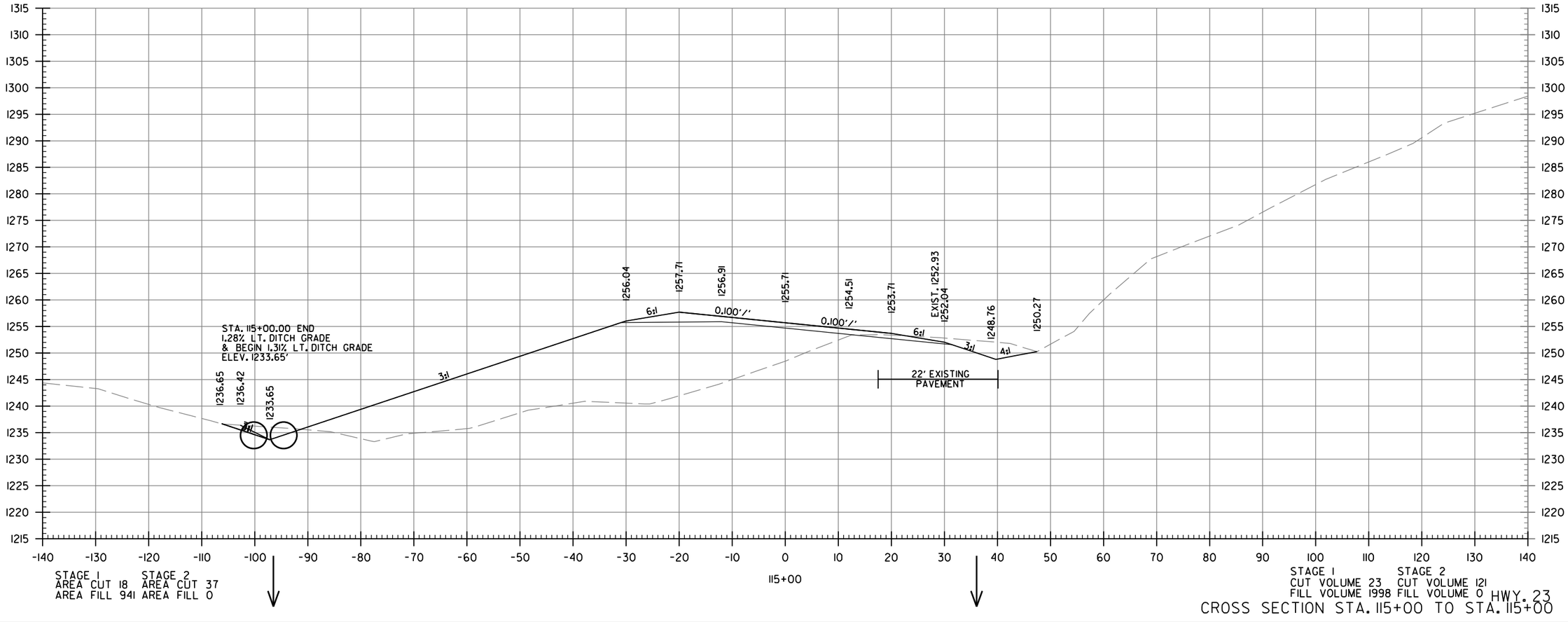

CROSS SECTION STA. 115+00 TO STA. 115+00 HWY. 23

mh39735 7/13/2023
R090523.DGN

DATE REVISED	DATE REVISED	FED.RD. DIST.NO.	STATE	JOB NO.	SHEET NO.	TOTAL SHEETS
		6	ARK.	090523	77	103
		CROSS SECTIONS				

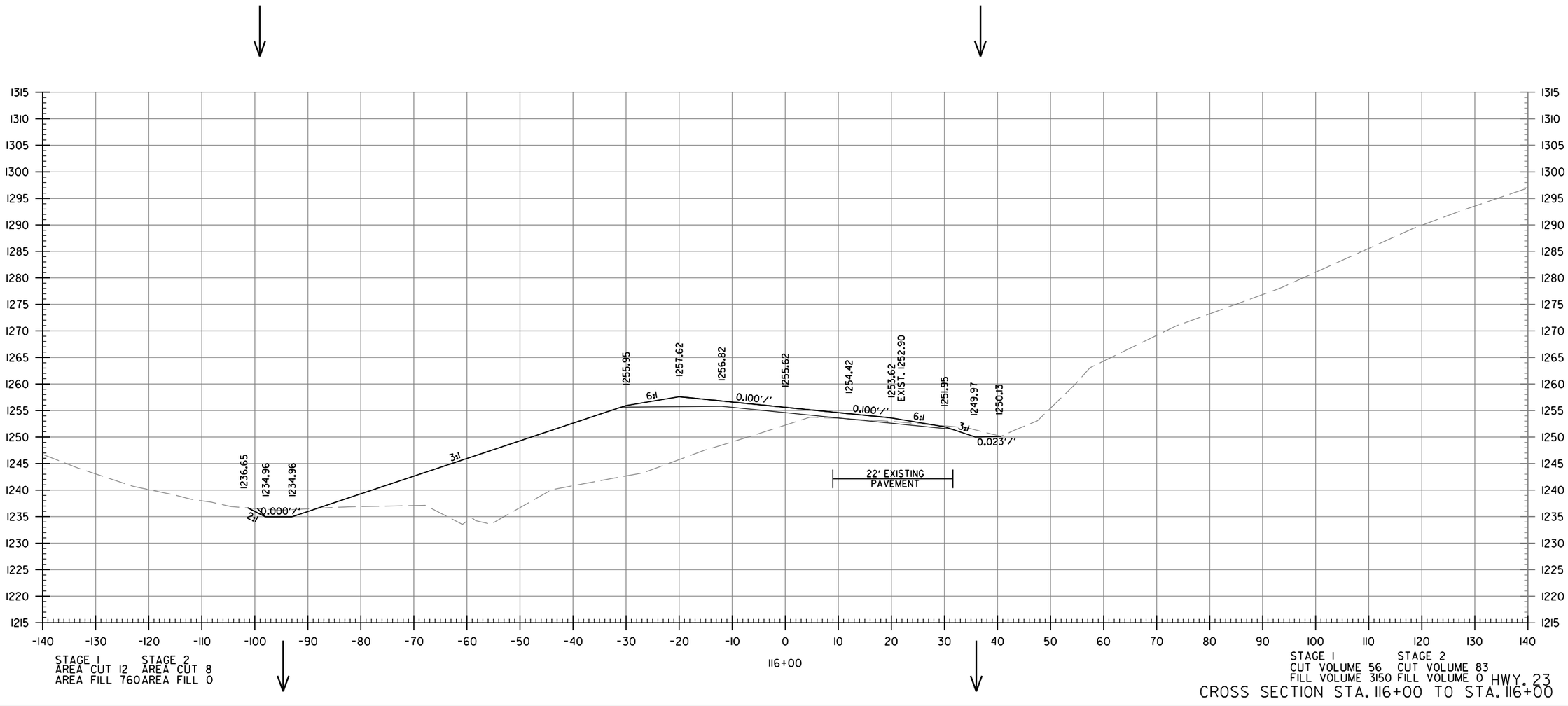

CROSS SECTION STA. 116+00 TO STA. 116+00 HWY. 23

mh39735 7/13/2023
R090523.DGN

DATE REVISED	DATE REVISED	FED.RD. DIST.NO.	STATE	JOB NO.	SHEET NO.	TOTAL SHEETS
		6	ARK.	090523	78	103
		CROSS SECTIONS				

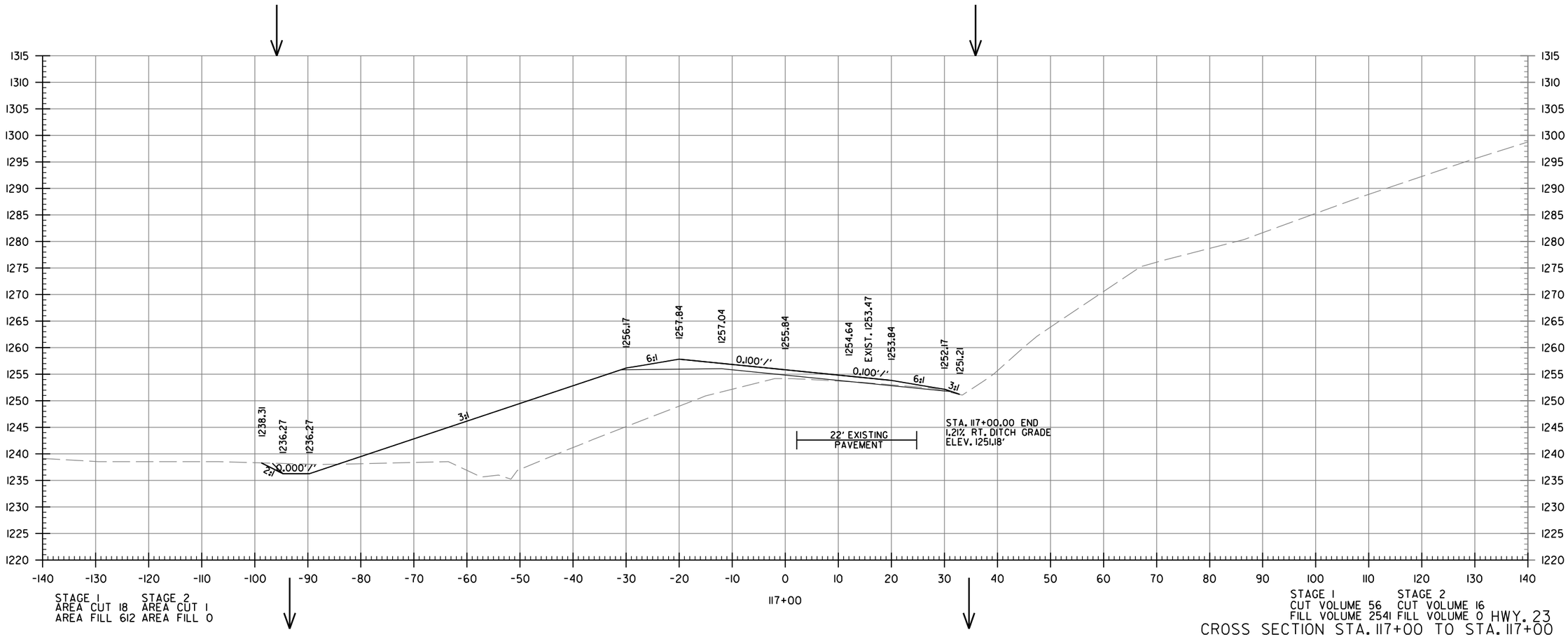

CROSS SECTION STA. 117+00 TO STA. 117+00

mh39735 7/13/2023
R090523.DGN

DATE REVISED	DATE REVISED	FED.RD. DIST.NO.	STATE	JOB NO.	SHEET NO.	TOTAL SHEETS
		6	ARK.	090523	79	103
		CROSS SECTIONS				

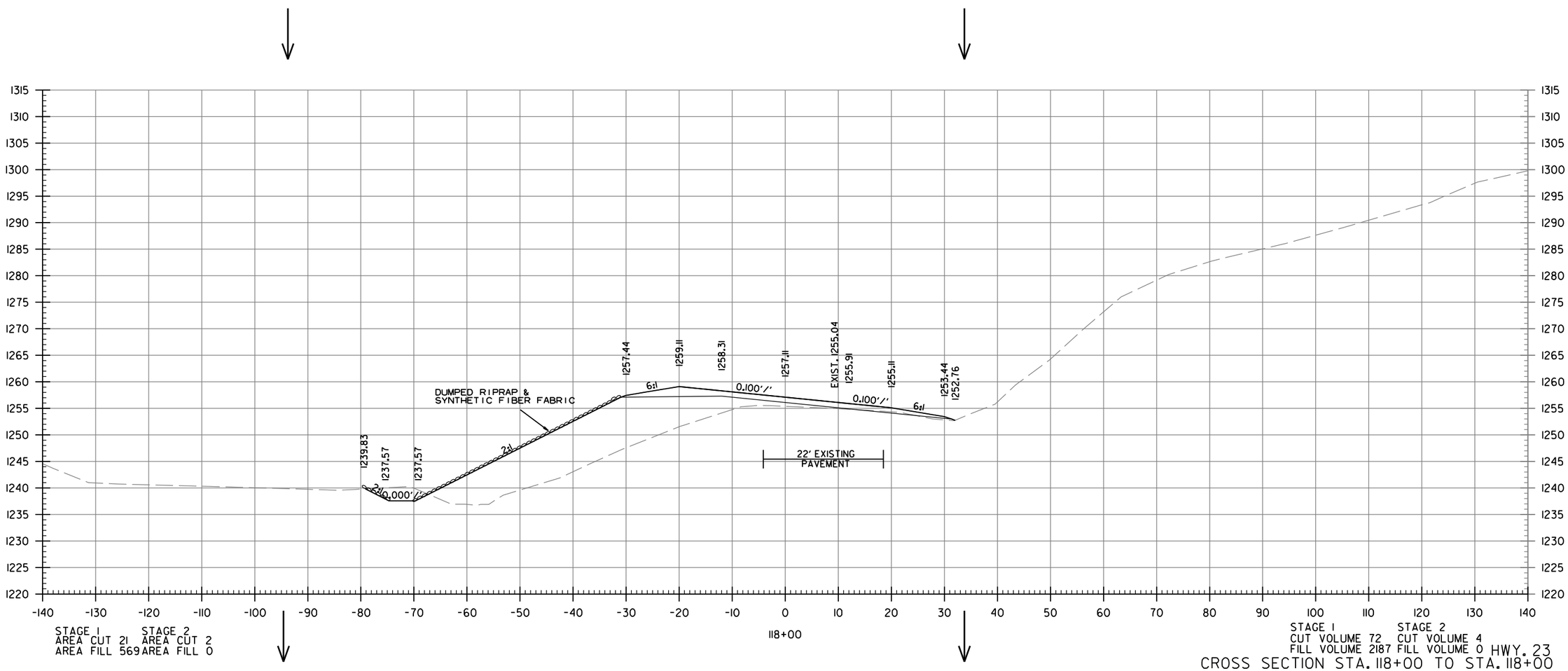

CROSS SECTION STA. 118+00 TO STA. 118+00 HWY. 23

mh39735 7/13/2023
R090523.DGN

DATE REVISED	DATE REVISED	FED.RD. DIST.NO.	STATE	JOB NO.	SHEET NO.	TOTAL SHEETS
		6	ARK.	090523	80	103
		CROSS SECTIONS				

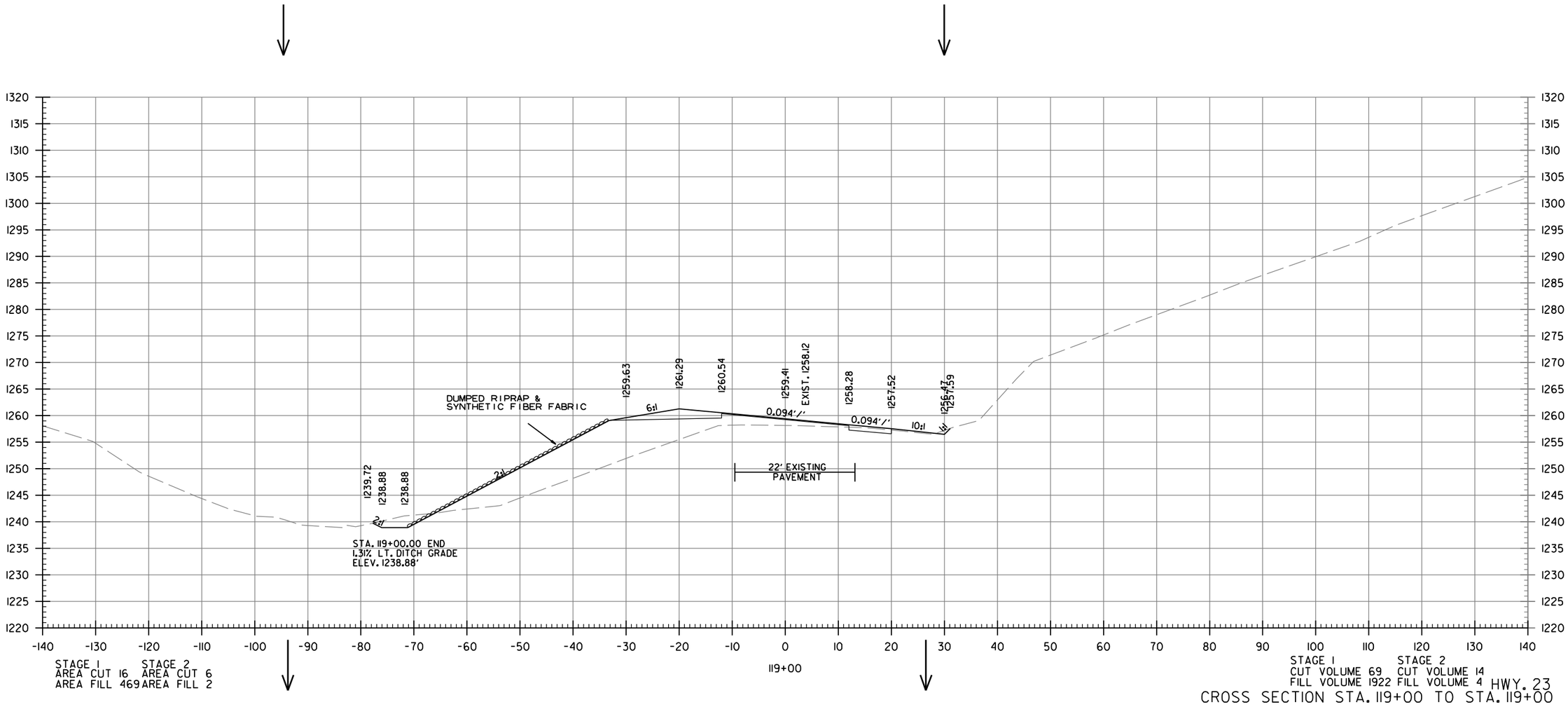

CROSS SECTION STA. 119+00 TO STA. 119+00 HWY. 23

mh39735 7/13/2023
R090523.DGN

DATE REVISED	DATE REVISED	FED.RD. DIST.NO.	STATE	JOB NO.	SHEET NO.	TOTAL SHEETS
		6	ARK.	090523	81	103
		CROSS SECTIONS				

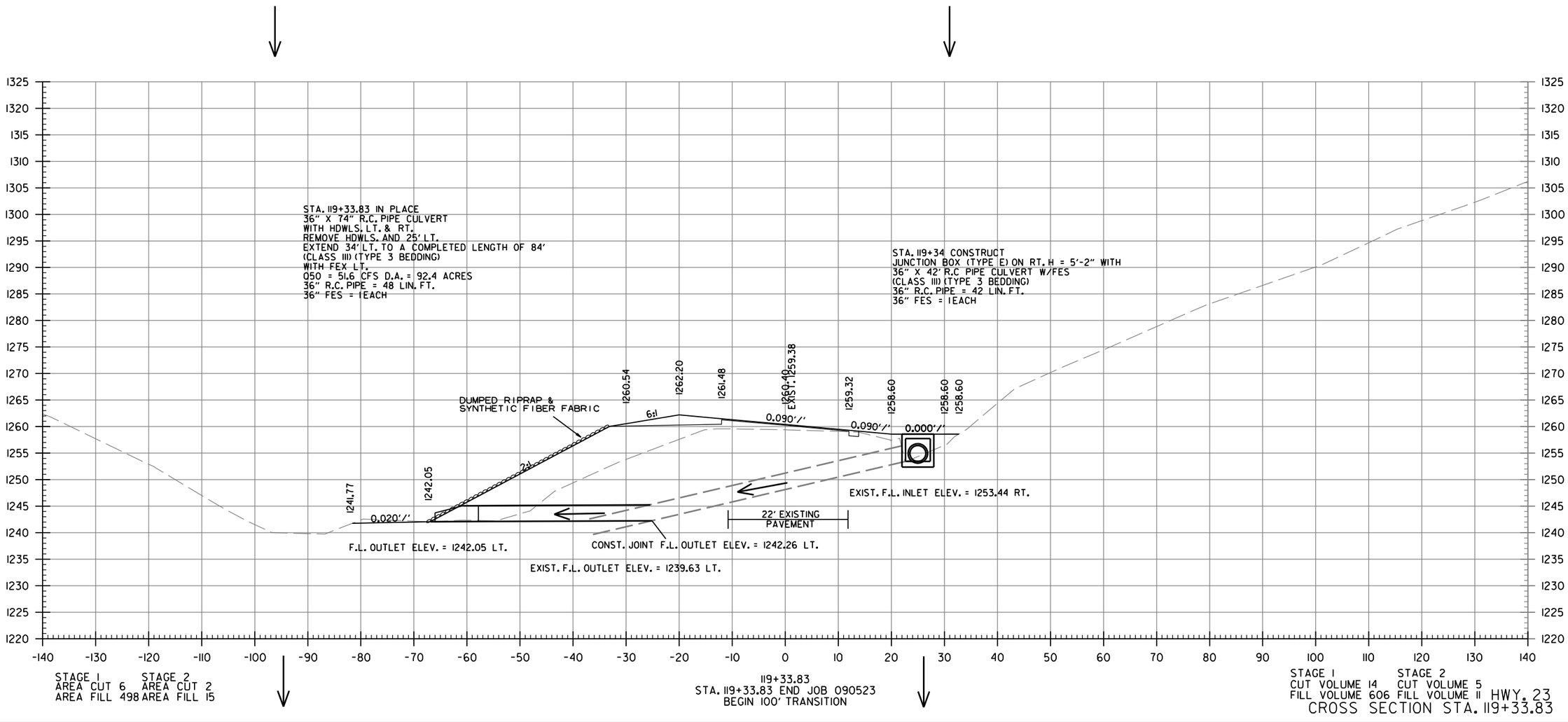

mh39735 7/13/2023
R090523.DGN

DATE REVISED	DATE REVISED	FED.RD. DIST.NO.	STATE	JOB NO.	SHEET NO.	TOTAL SHEETS
		6	ARK.	090523	82	103
		CROSS SECTIONS				

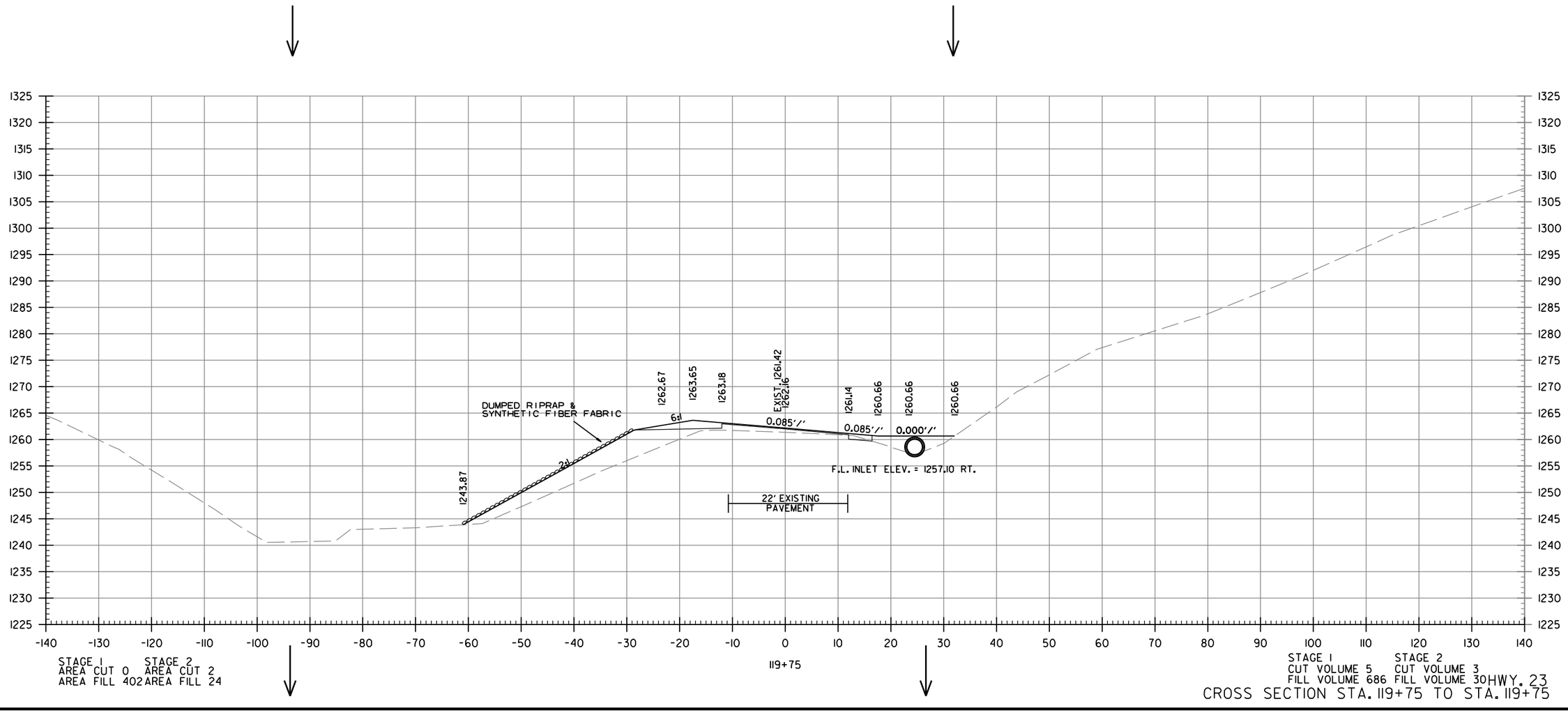

HWY. 23
CROSS SECTION STA. 119+75 TO STA. 119+75

mh39735 7/13/2023
R090523.DGN

DATE REVISED	DATE REVISED	FED.RD. DIST.NO.	STATE	JOB NO.	SHEET NO.	TOTAL SHEETS
		6	ARK.	090523	83	103
		CROSS SECTIONS				

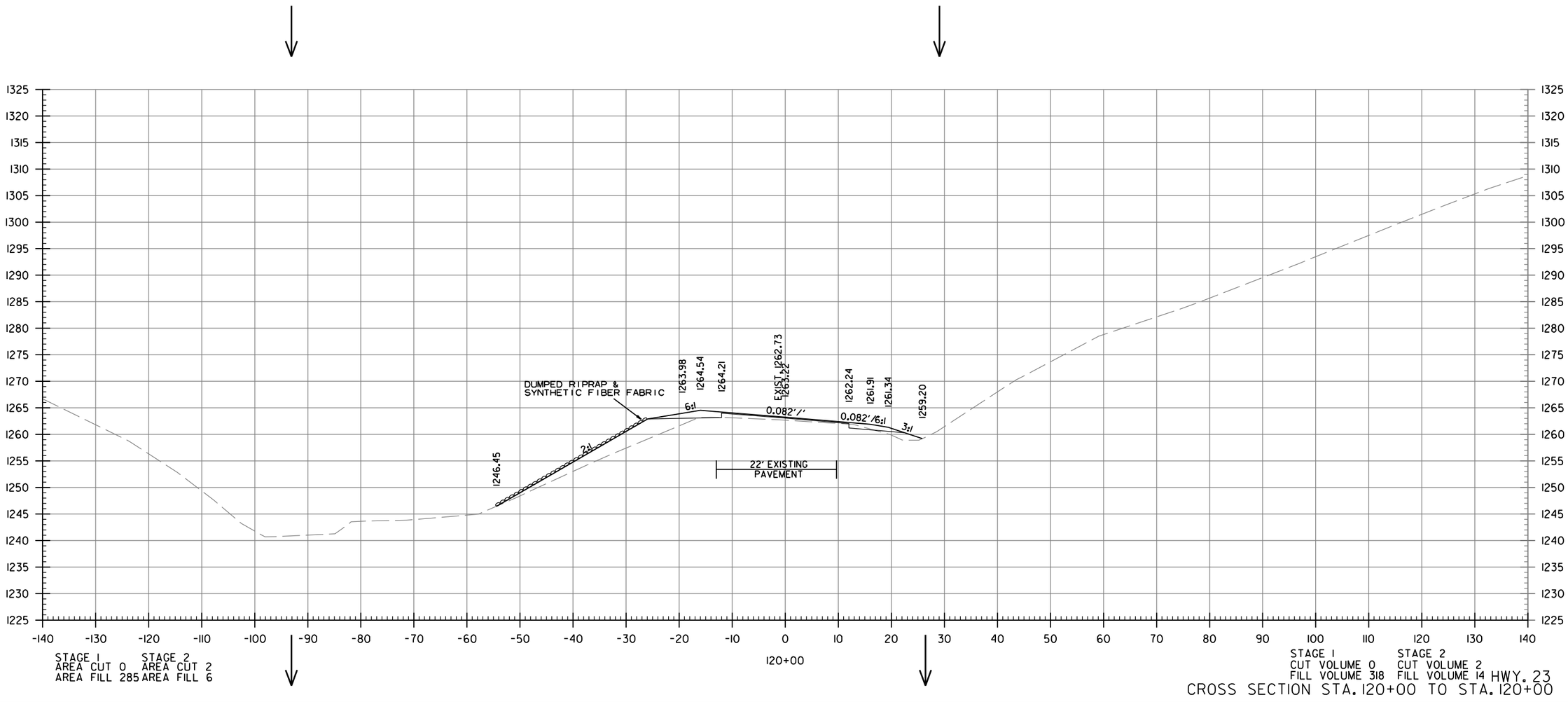

mh39735 7/13/2023
R090523.DGN

DATE REVISED	DATE REVISED	FED.RD. DIST.NO.	STATE	JOB NO.	SHEET NO.	TOTAL SHEETS
		6	ARK.	090523	84	103
		CROSS SECTIONS				

STAGE 1 STAGE 2
AREA CUT 0 AREA CUT 0
AREA FILL 0 AREA FILL 0

STAGE 1 STAGE 2
CUT VOLUME 0 CUT VOLUME 0
FILL VOLUME 0 FILL VOLUME 0

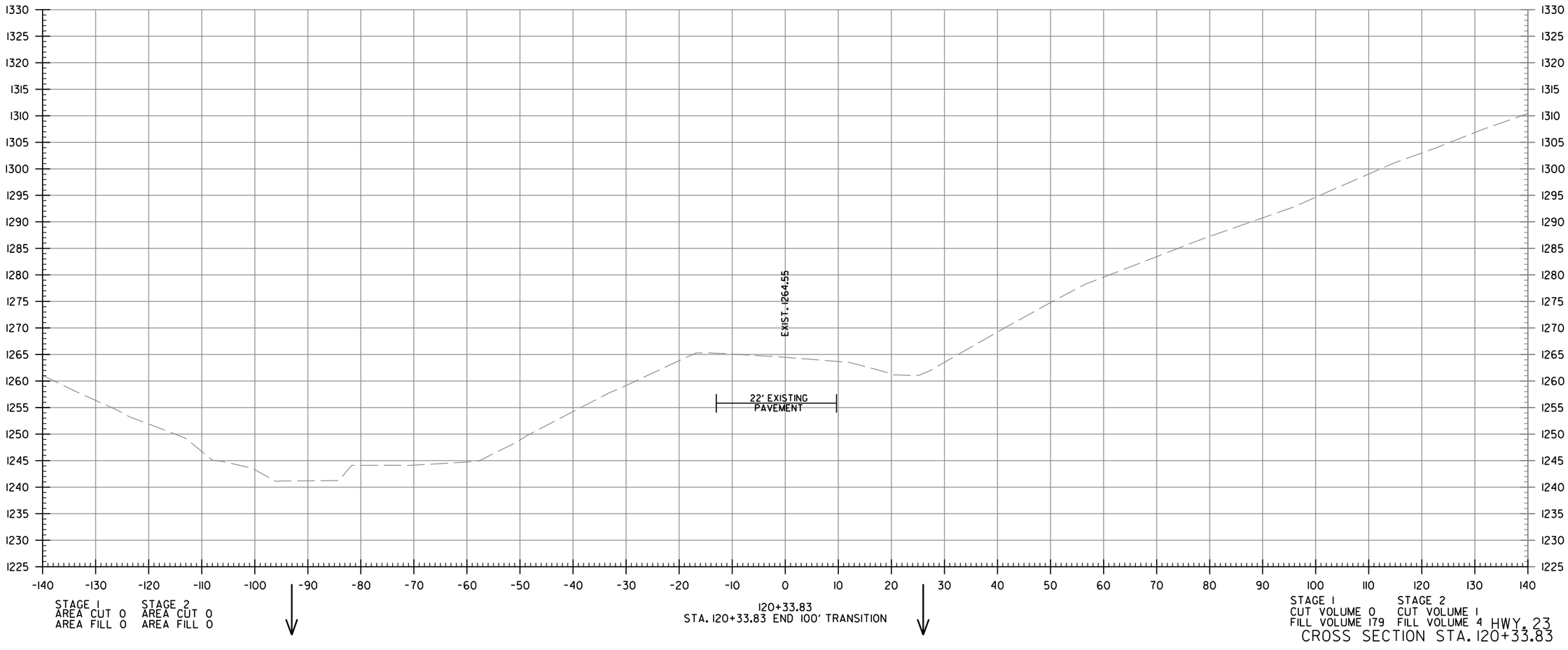

STAGE 1 STAGE 2
AREA CUT 0 AREA CUT 0
AREA FILL 0 AREA FILL 0

120+33.83
STA. 120+33.83 END 100' TRANSITION

STAGE 1 STAGE 2
CUT VOLUME 0 CUT VOLUME 1
FILL VOLUME 179 FILL VOLUME 4

HWY. 23
CROSS SECTION STA. 120+33.83

mh39735 7/13/2023
R090523.DGN

DATE REVISED	DATE REVISED	FED.RD. DIST.NO.	STATE	JOB NO.	SHEET NO.	TOTAL SHEETS
		6	ARK.	090523	85	103
		CROSS SECTIONS				

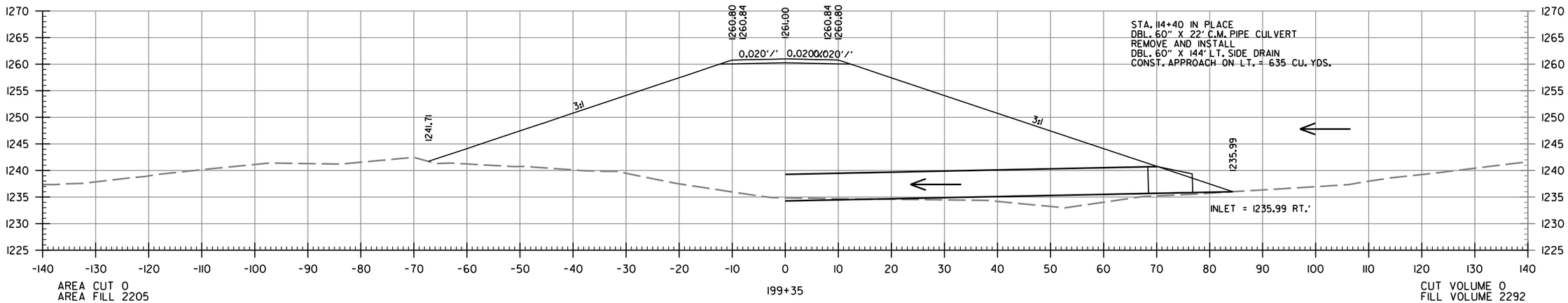

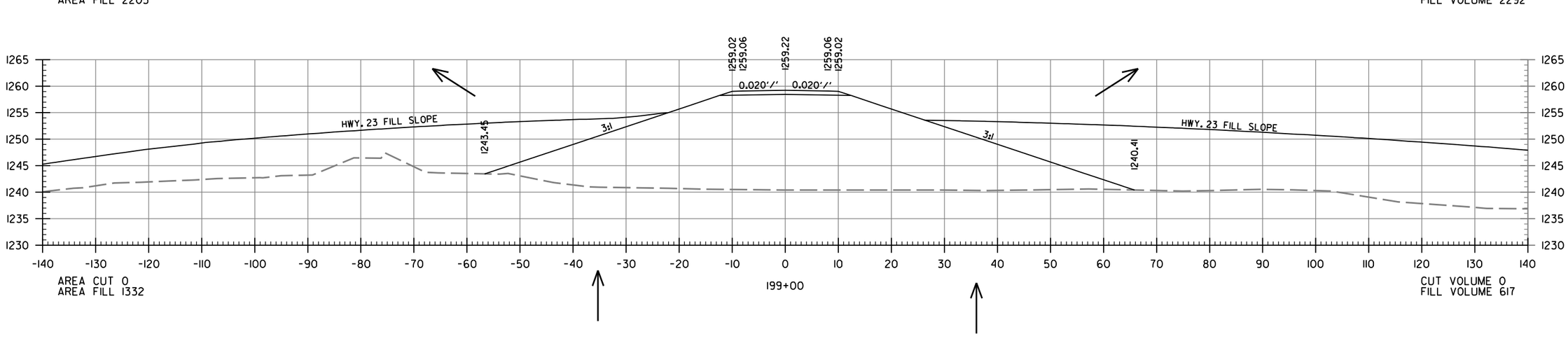

MADISON CO. RD. 8530
CROSS SECTION STA. 198+75.34 TO STA. 199+35.00

mh39735 7/13/2023
R090523.DGN

DATE REVISED	DATE REVISED	FED.RD. DIST.NO.	STATE	JOB NO.	SHEET NO.	TOTAL SHEETS
		6	ARK.	090523	86	103
		CROSS SECTIONS				

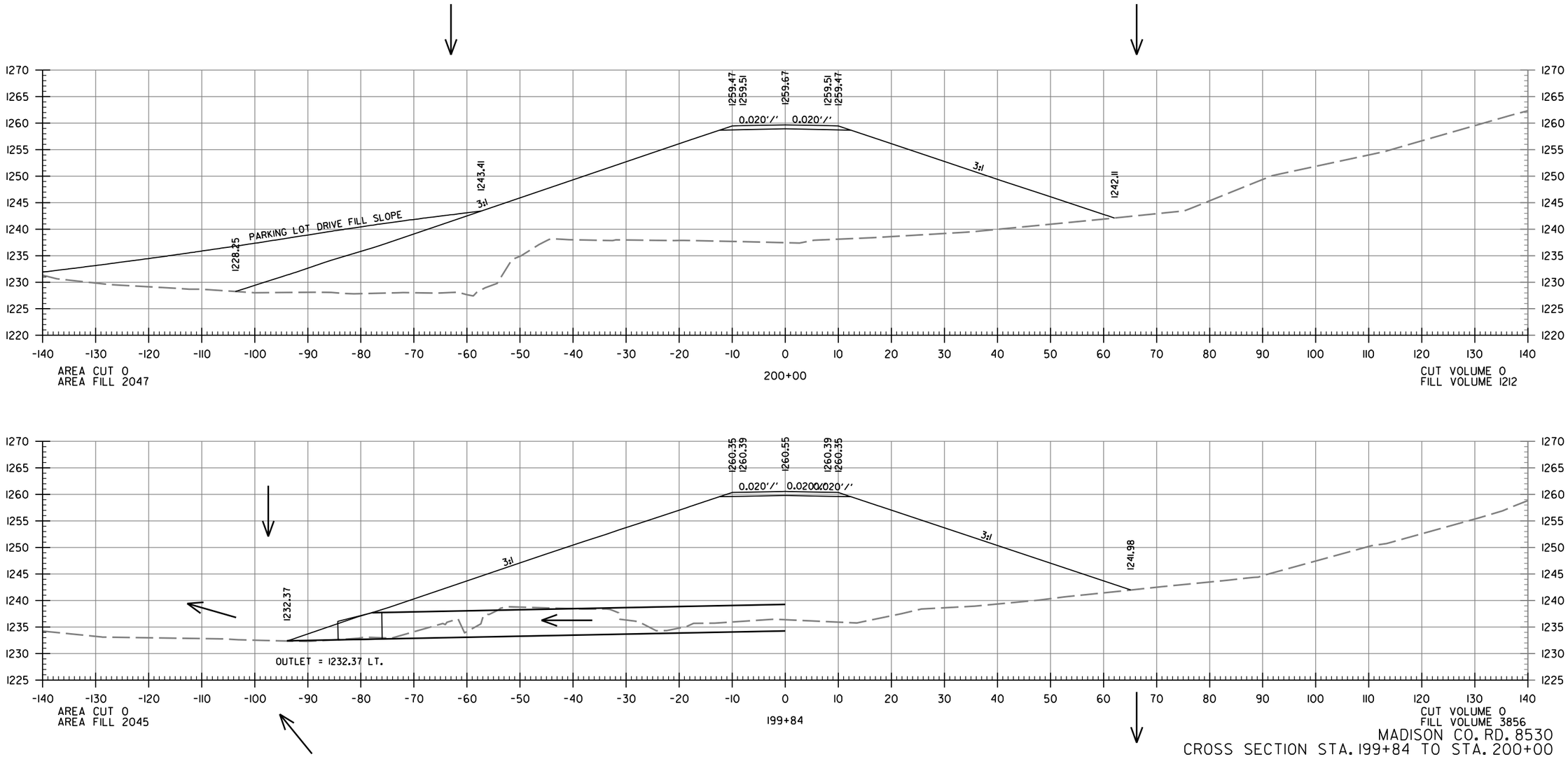

MADISON CO. RD. 8530
CROSS SECTION STA. 199+84 TO STA. 200+00

mh39735 7/13/2023
R090523.DGN

DATE REVISED	DATE REVISED	FED.RD. DIST.NO.	STATE	JOB NO.	SHEET NO.	TOTAL SHEETS
		6	ARK.	090523	87	103
		CROSS SECTIONS				

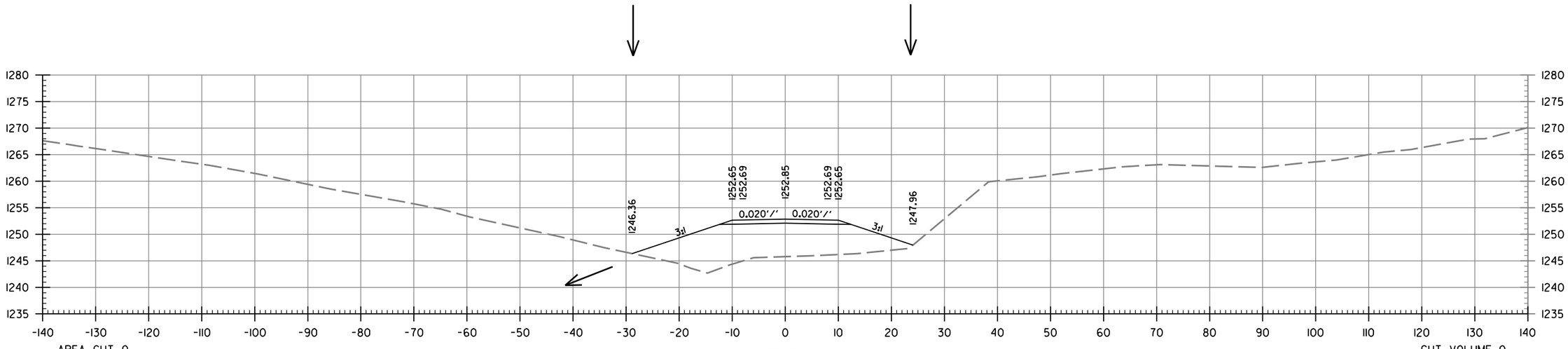

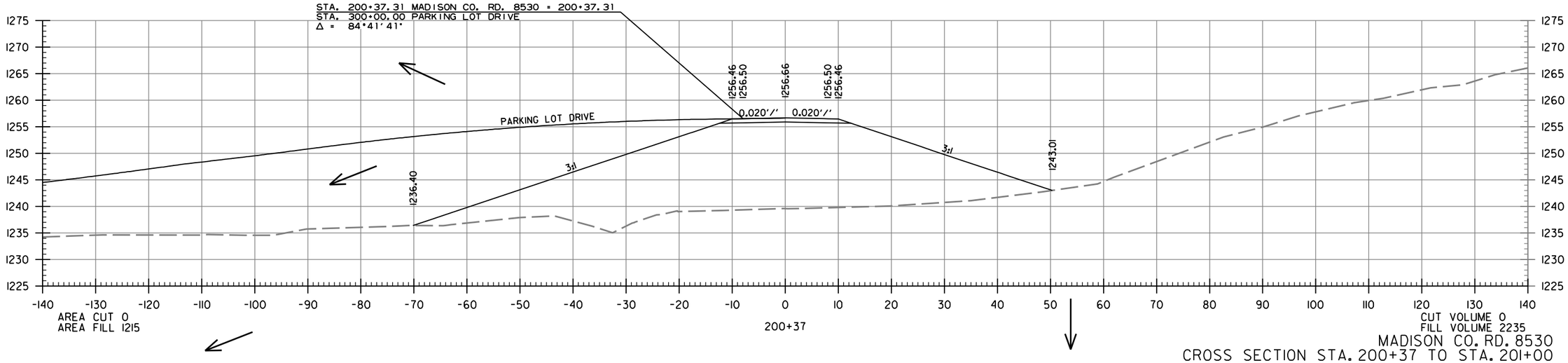

MADISON CO. RD. 8530
CROSS SECTION STA. 200+37 TO STA. 201+00

mh39735 7/13/2023
R090523.DGN

DATE REVISED	DATE REVISED	FED.RD. DIST.NO.	STATE	JOB NO.	SHEET NO.	TOTAL SHEETS
		6	ARK.	090523	88	103
		CROSS SECTIONS				

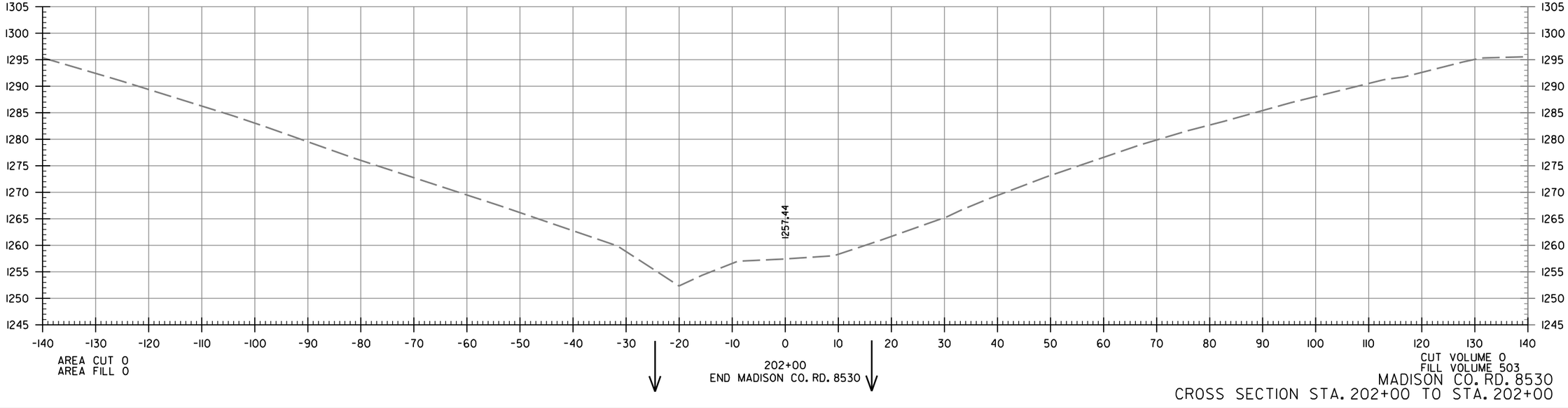

MADISON CO. RD. 8530
CROSS SECTION STA. 202+00 TO STA. 202+00

mh39735 7/13/2023
R090523.DGN

DATE REVISED	DATE REVISED	FED.RD. DIST.NO.	STATE	JOB NO.	SHEET NO.	TOTAL SHEETS
		6	ARK.	090523	89	103
		CROSS SECTIONS				

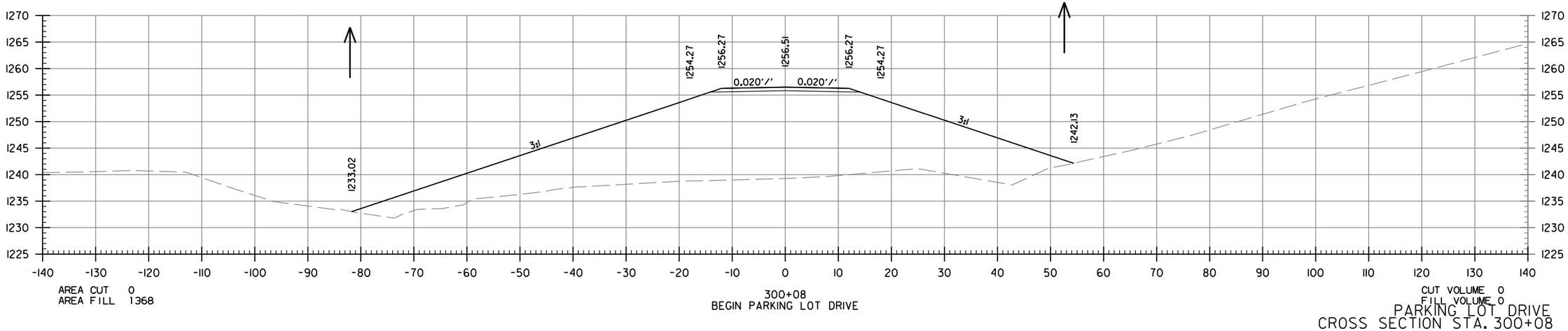

PARKING LOT DRIVE
CROSS SECTION STA. 300+08

mh39735 7/13/2023
R090523.DGN

DATE REVISED	DATE REVISED	FED.RD. DIST.NO.	STATE	JOB NO.	SHEET NO.	TOTAL SHEETS
		6	ARK.	090523	90	103
		CROSS SECTIONS				

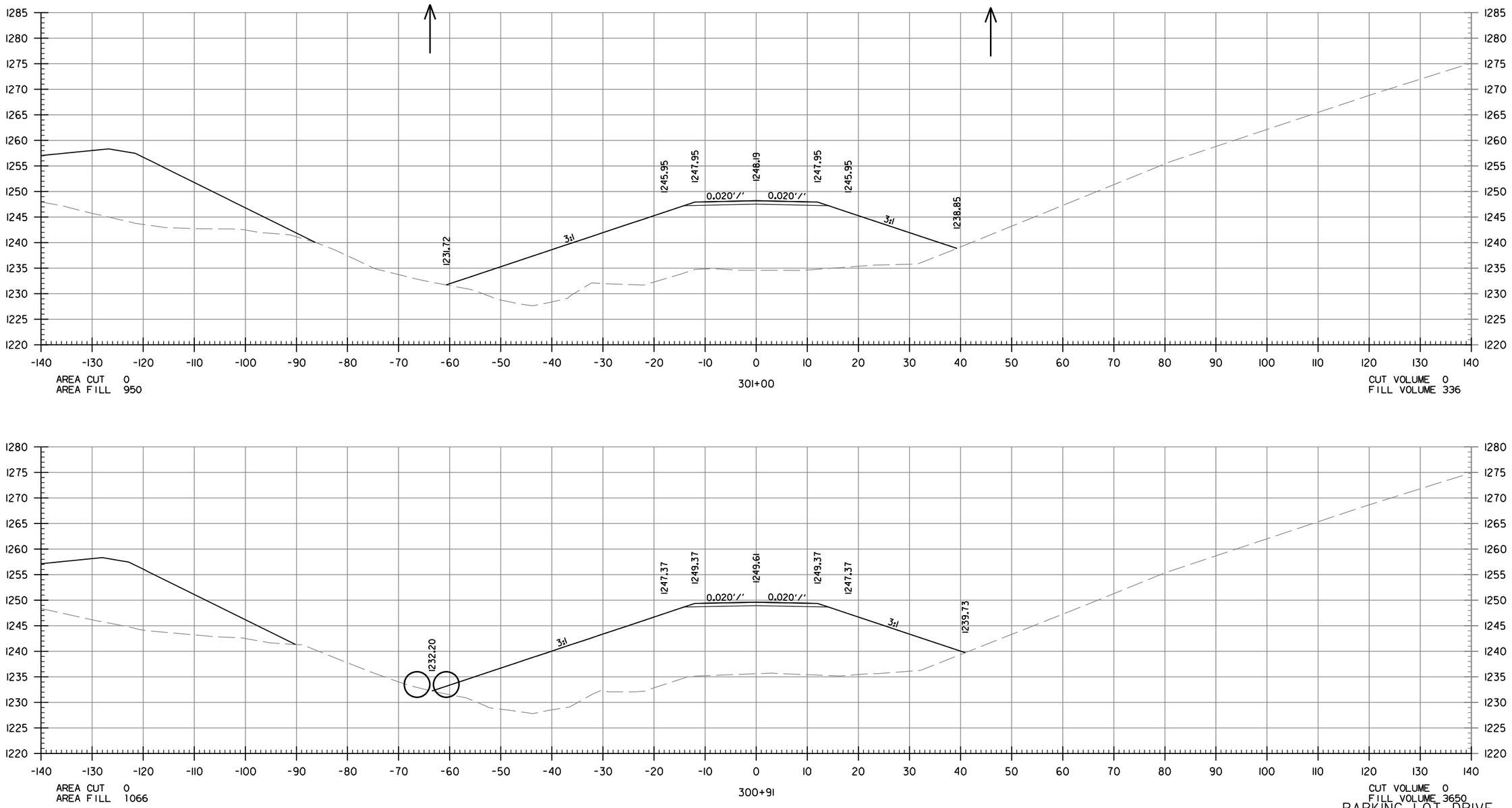

PARKING LOT DRIVE
CROSS SECTION STA. 300+91 TO STA. 301+00

mh39735 7/13/2023
R090523.DGN

DATE REVISED	DATE REVISED	FED.RD. DIST.NO.	STATE	JOB NO.	SHEET NO.	TOTAL SHEETS
		6	ARK.	090523	91	103
		CROSS SECTIONS				

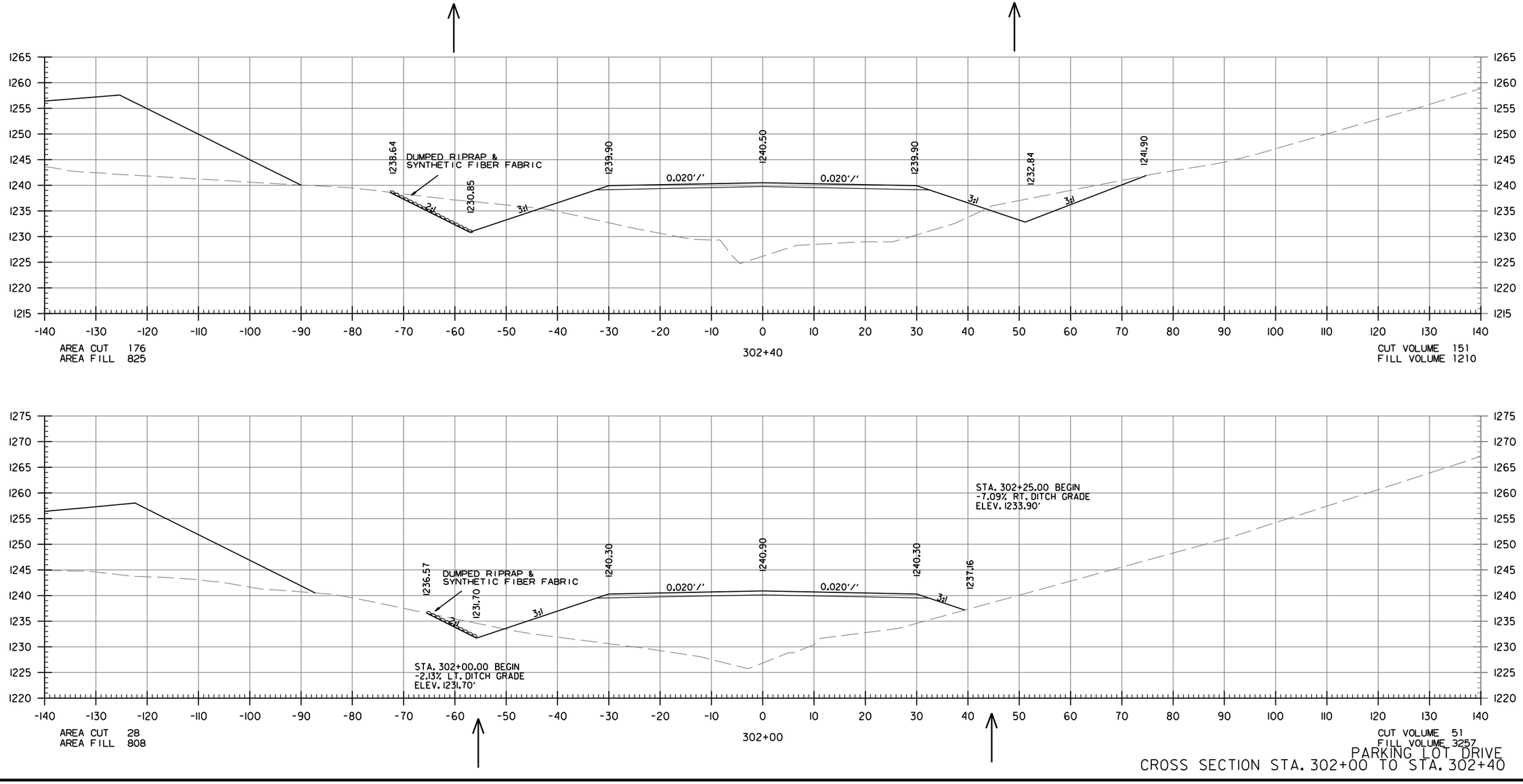

PARKING LOT DRIVE
CROSS SECTION STA. 302+00 TO STA. 302+40

mh39735 7/13/2023
R090523.DGN

DATE REVISED	DATE REVISED	FED.RD. DIST.NO.	STATE	JOB NO.	SHEET NO.	TOTAL SHEETS
		6	ARK.	090523	92	103
		CROSS SECTIONS				

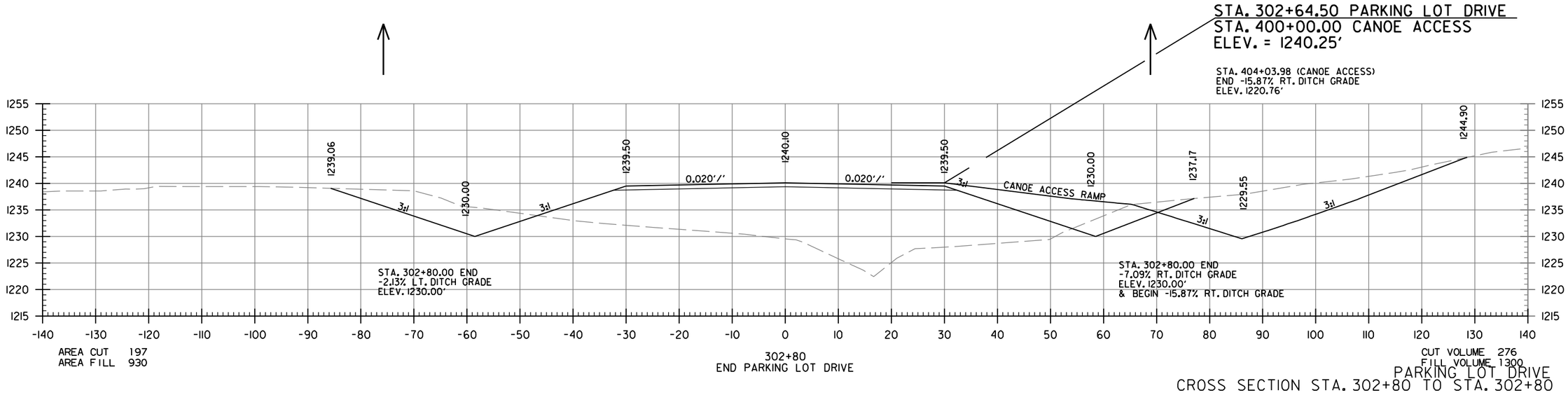

PARKING LOT DRIVE
CROSS SECTION STA. 302+80 TO STA. 302+80

mh39735 7/13/2023
R090523.DGN

DATE REVISED	DATE REVISED	FED.RD. DIST.NO.	STATE	JOB NO.	SHEET NO.	TOTAL SHEETS
		6	ARK.	090523	93	103
		CROSS SECTIONS				

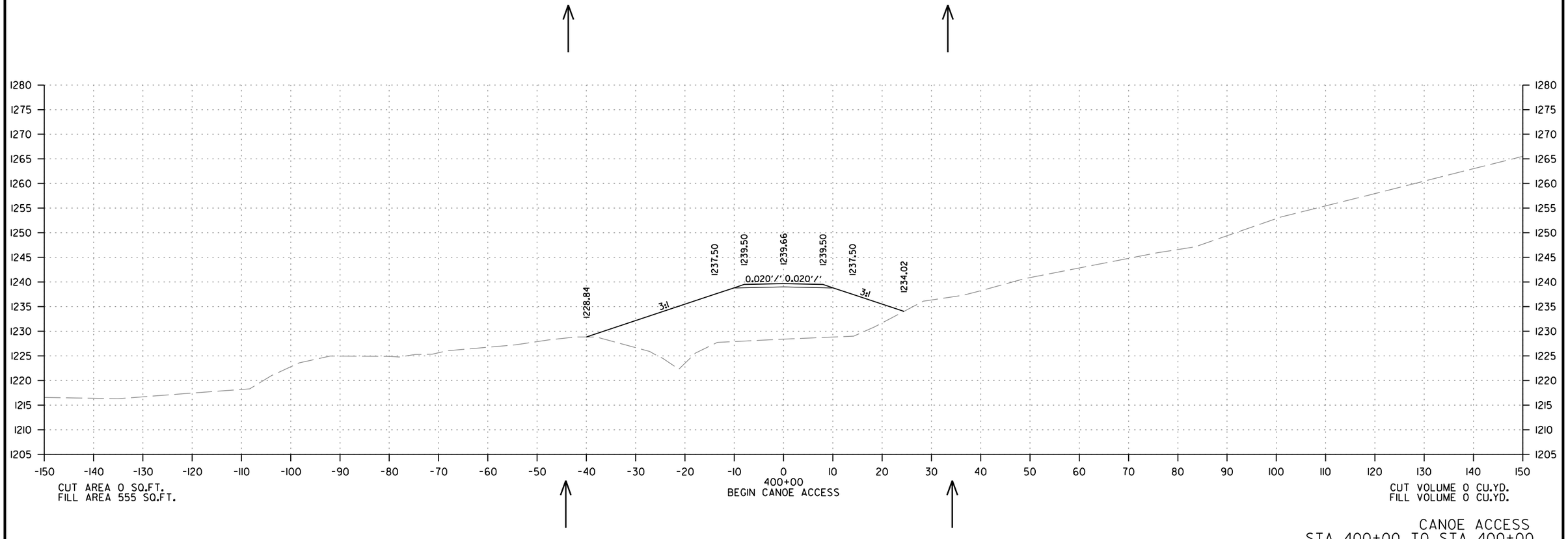

CANOE ACCESS
STA. 400+00 TO STA. 400+00

mh39735 7/13/2023
R090523.DGN

DATE REVISED	DATE REVISED	FED.RD. DIST.NO.	STATE	JOB NO.	SHEET NO.	TOTAL SHEETS
		6	ARK.	090523	94	103
		CROSS SECTIONS				

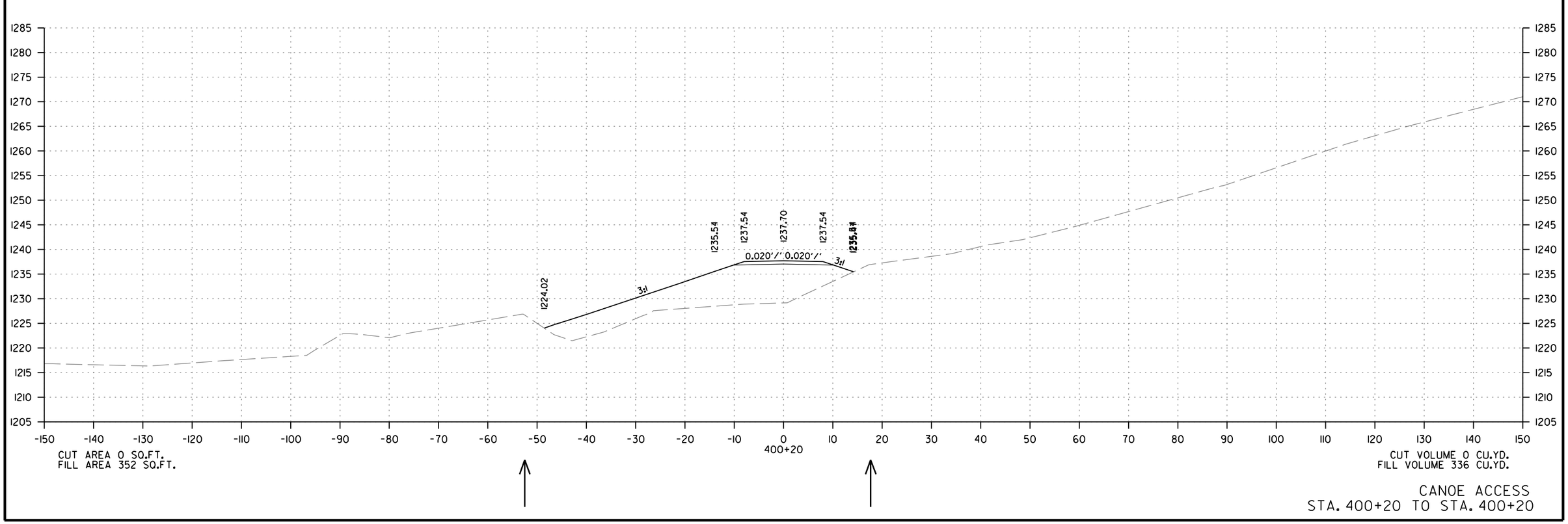

CANOE ACCESS
STA. 400+20 TO STA. 400+20

mh39735 7/13/2023
R090523.DGN

DATE REVISED	DATE REVISED	FED.RD. DIST.NO.	STATE	JOB NO.	SHEET NO.	TOTAL SHEETS
		6	ARK.	090523	95	103
		CROSS SECTIONS				

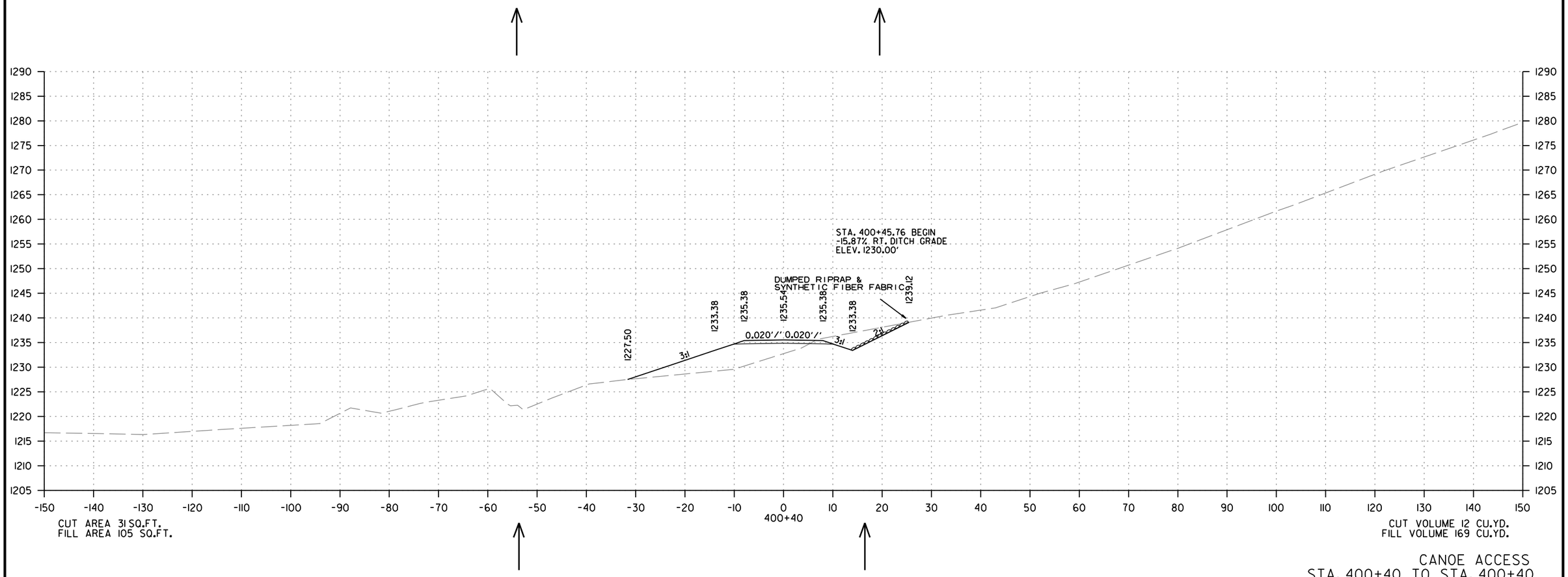

CANOE ACCESS
STA. 400+40 TO STA. 400+40

mh39735 7/13/2023
R090523.DGN

DATE REVISED	DATE REVISED	FED.RD. DIST.NO.	STATE	JOB NO.	SHEET NO.	TOTAL SHEETS
		6	ARK.	090523	96	103
		CROSS SECTIONS				

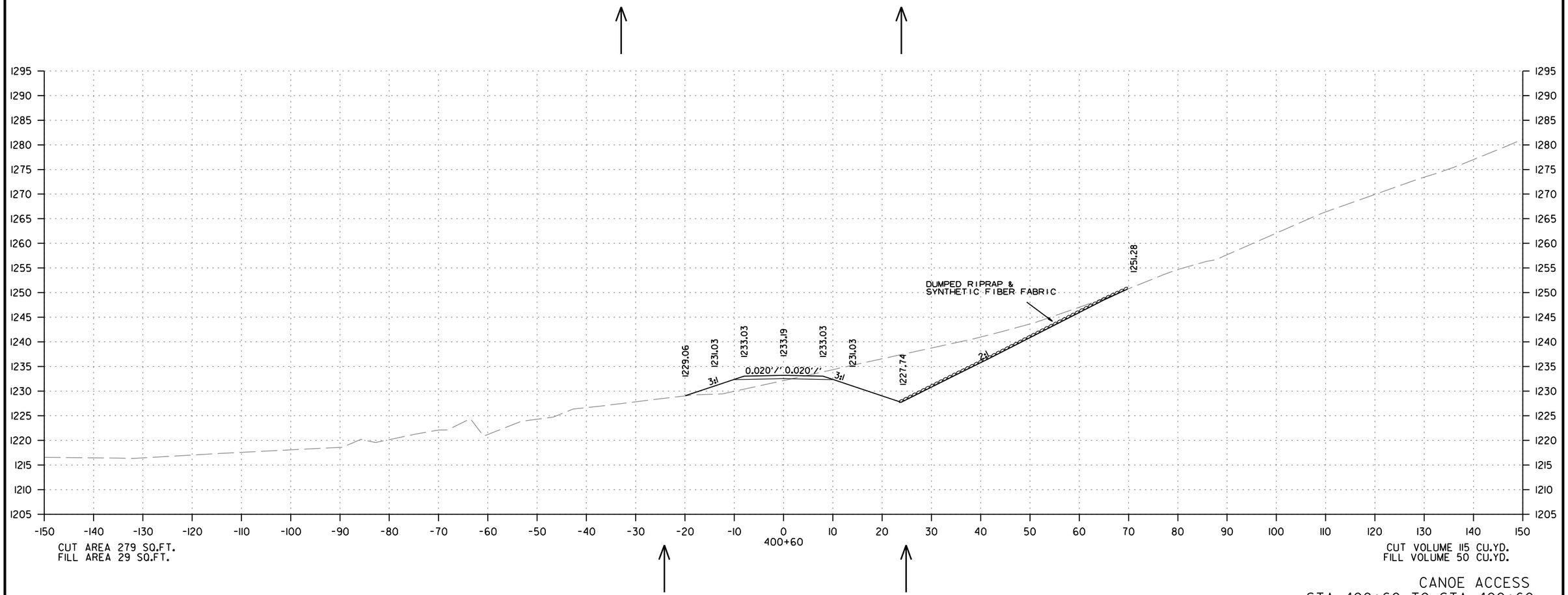

CANOE ACCESS
STA. 400+60 TO STA. 400+60

mh39735 7/13/2023
R090523.DGN

DATE REVISED	DATE REVISED	FED.RD. DIST.NO.	STATE	JOB NO.	SHEET NO.	TOTAL SHEETS
		6	ARK.	090523	97	103
		CROSS SECTIONS				

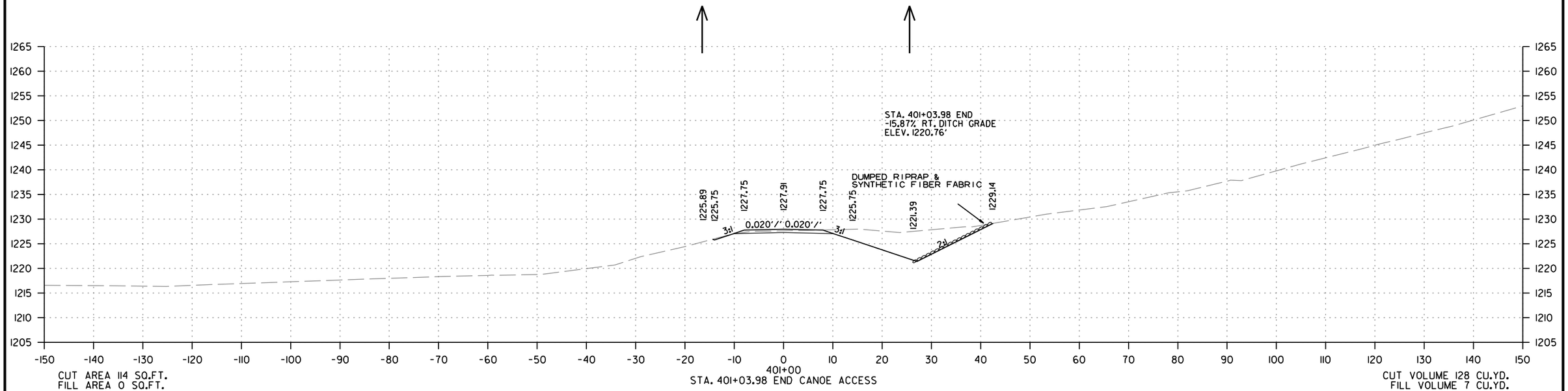

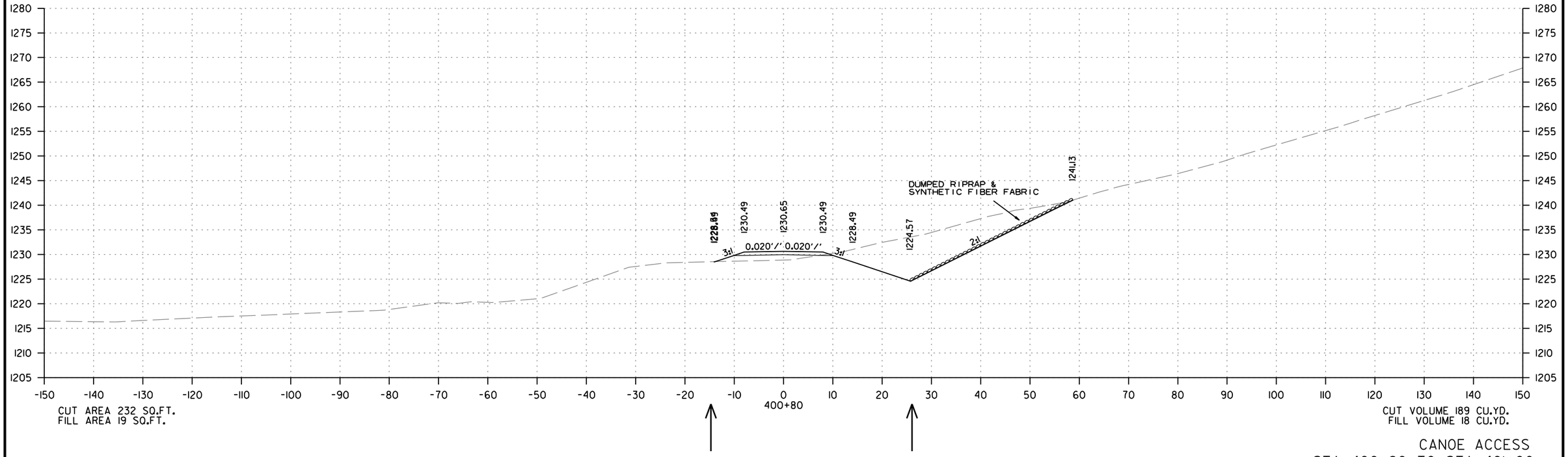

CANOE ACCESS
STA. 400+80 TO STA. 401+00

mh39735 7/13/2023
R090523.DGN

DATE REVISED	DATE REVISED	FED.RD. DIST.NO.	STATE	JOB NO.	SHEET NO.	TOTAL SHEETS
		6	ARK.	090523	98	103
		CROSS SECTIONS				

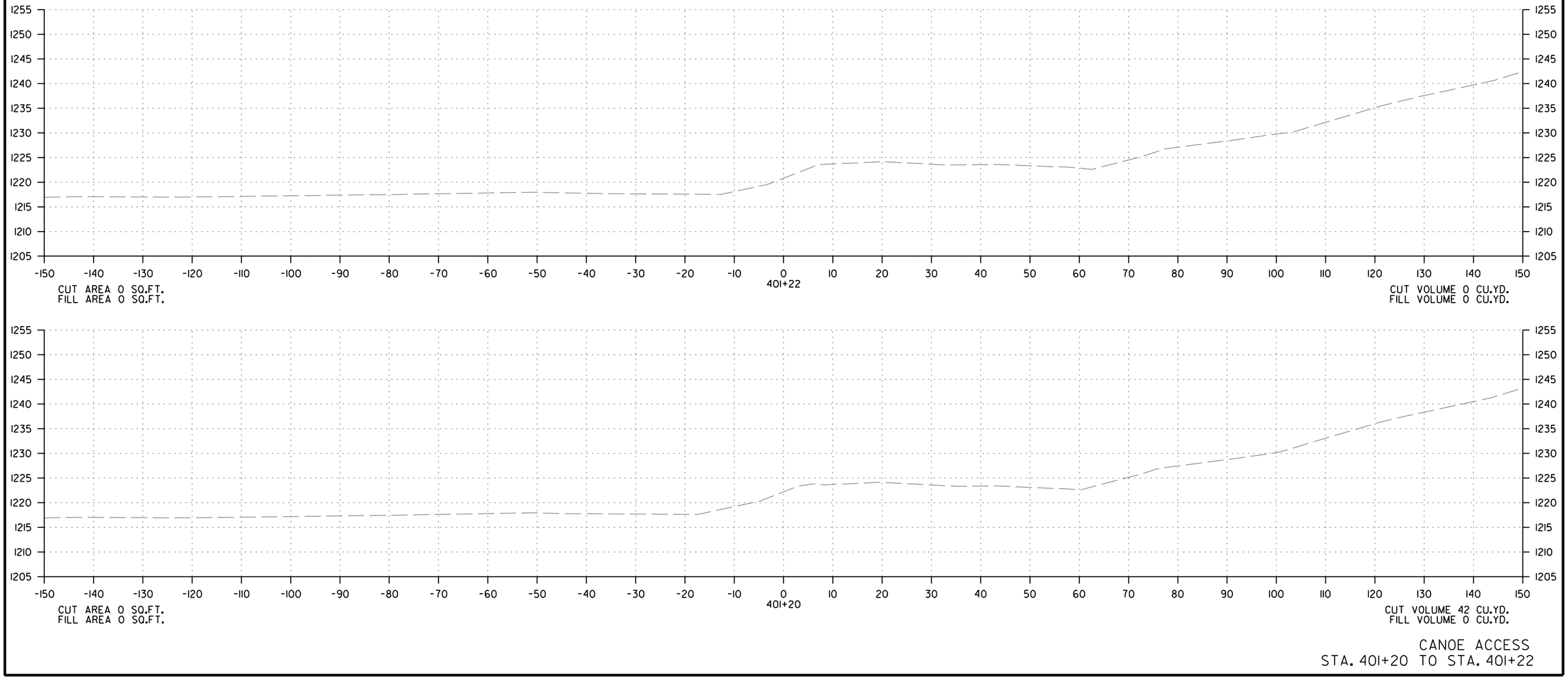

CANOE ACCESS
STA. 401+20 TO STA. 401+22

mh39735 7/13/2023
R090523.DGN

DATE REVISED	DATE REVISED	FED.RD. DIST.NO.	STATE	JOB NO.	SHEET NO.	TOTAL SHEETS
		6	ARK.	090523	99	103
		CROSS SECTIONS				

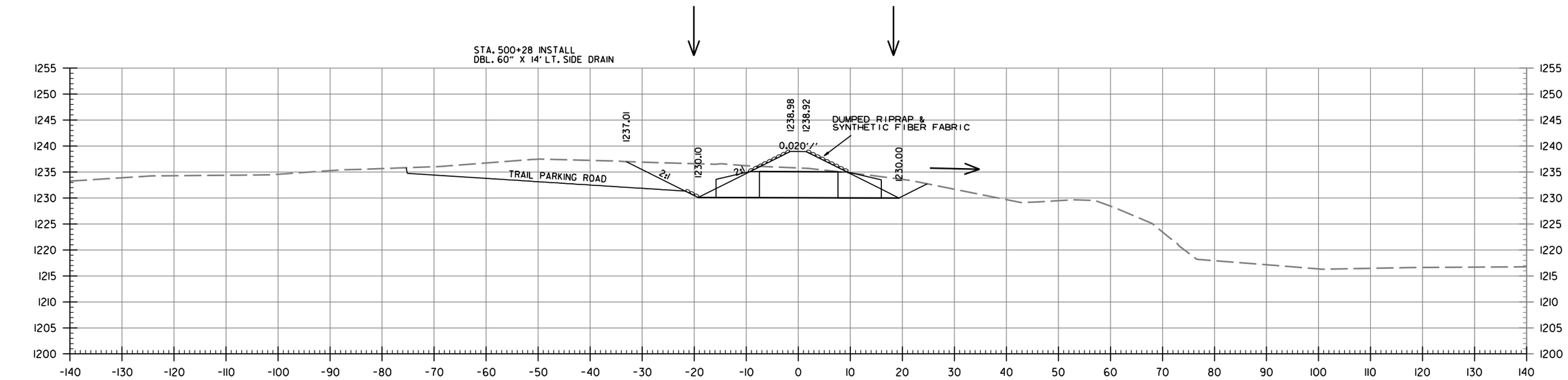

CUT AREA 210 SQ.FT.
FILL AREA 31 SQ.FT.

500+28

CUT VOLUME 109 CU.YD.
FILL VOLUME 16 CU.YD.

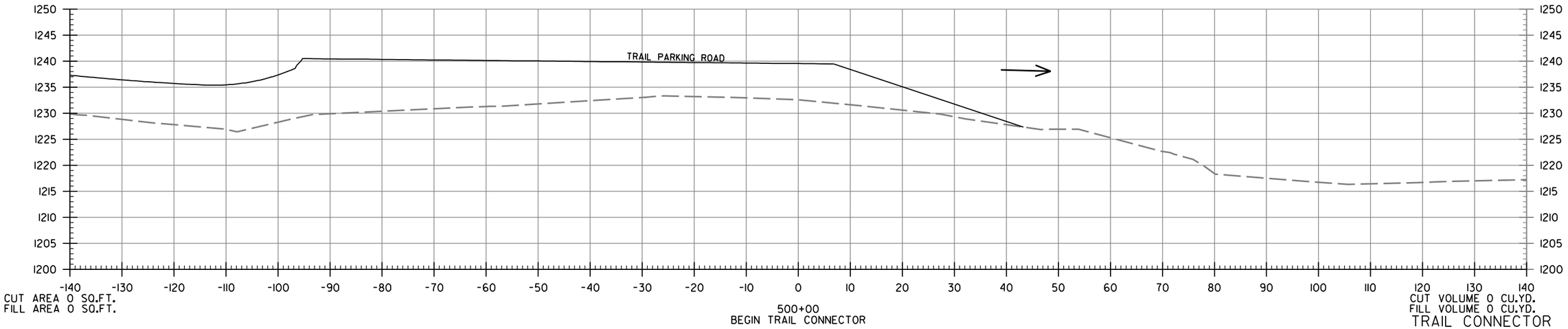

CUT AREA 0 SQ.FT.
FILL AREA 0 SQ.FT.

500+00
BEGIN TRAIL CONNECTOR

CUT VOLUME 0 CU.YD.
FILL VOLUME 0 CU.YD.

TRAIL CONNECTOR
CROSS SECTION STA. 500+00 TO STA. 500+28

mh39735 7/13/2023
R090523.DGN

DATE REVISED	DATE REVISED	FED.RD. DIST.NO.	STATE	JOB NO.	SHEET NO.	TOTAL SHEETS
		6	ARK.	090523	100	103
		CROSS SECTIONS				

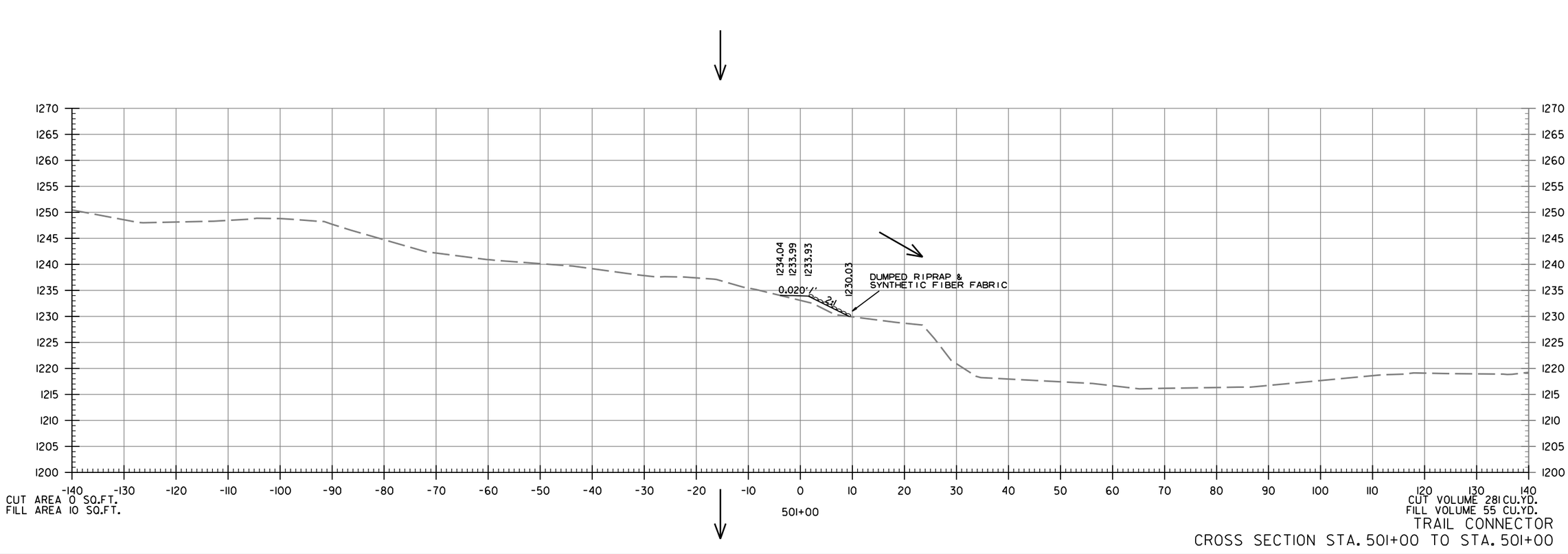

CUT AREA 0 SQ.FT.
FILL AREA 10 SQ.FT.

501+00

CUT VOLUME 281 CU.YD.
FILL VOLUME 55 CU.YD.

TRAIL CONNECTOR
CROSS SECTION STA. 501+00 TO STA. 501+00

mh39735 7/13/2023
R090523.DGN

DATE REVISED	DATE REVISED	FED.RD. DIST.NO.	STATE	JOB NO.	SHEET NO.	TOTAL SHEETS
		6	ARK.	090523	101	103
		CROSS SECTIONS				

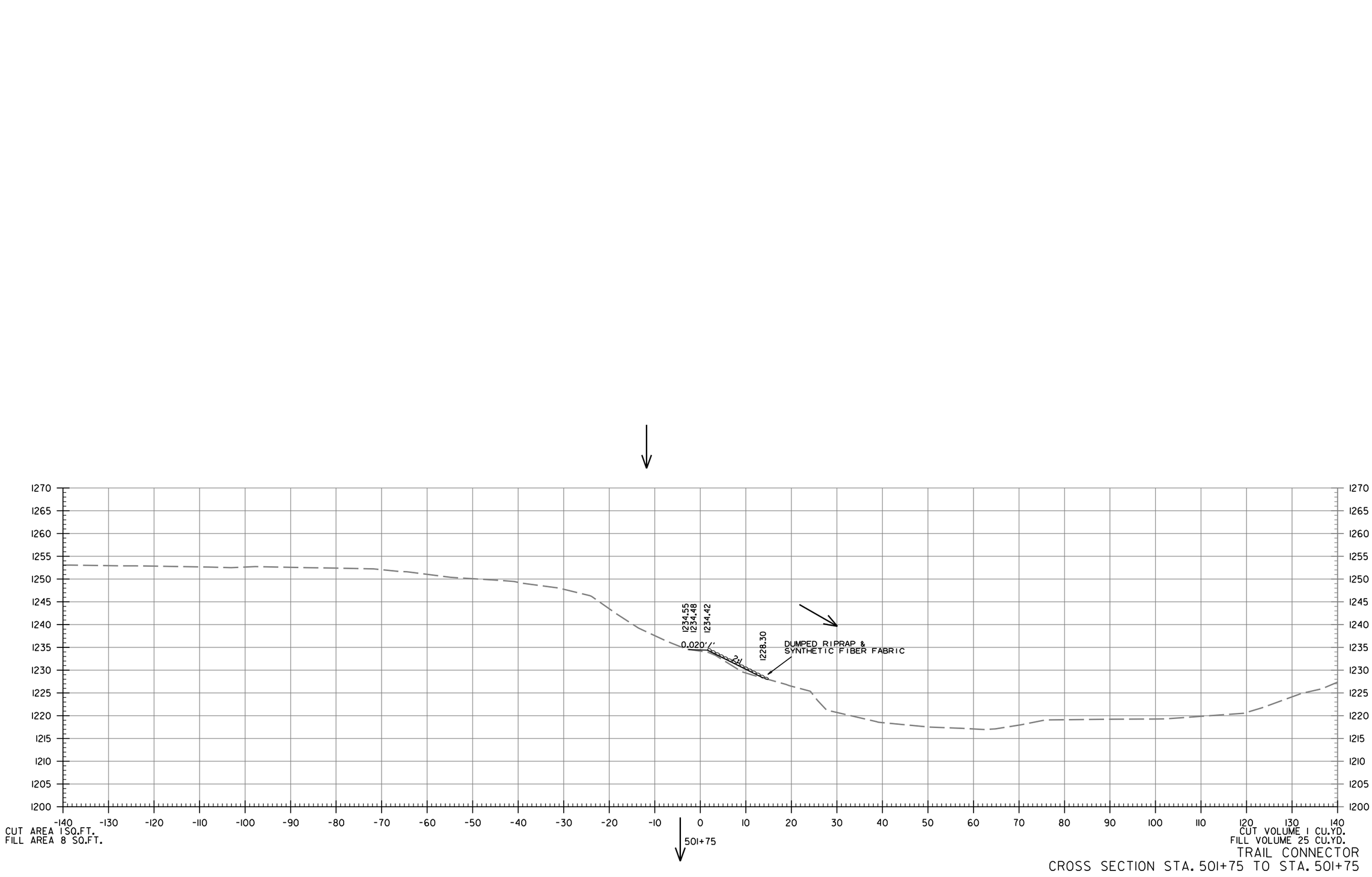

TRAIL CONNECTOR
CROSS SECTION STA. 501+75 TO STA. 501+75

mh39735 7/13/2023
R090523.DGN

DATE REVISED	DATE REVISED	FED.RD. DIST.NO.	STATE	JOB NO.	SHEET NO.	TOTAL SHEETS
		6	ARK.	090523	102	103
		CROSS SECTIONS				

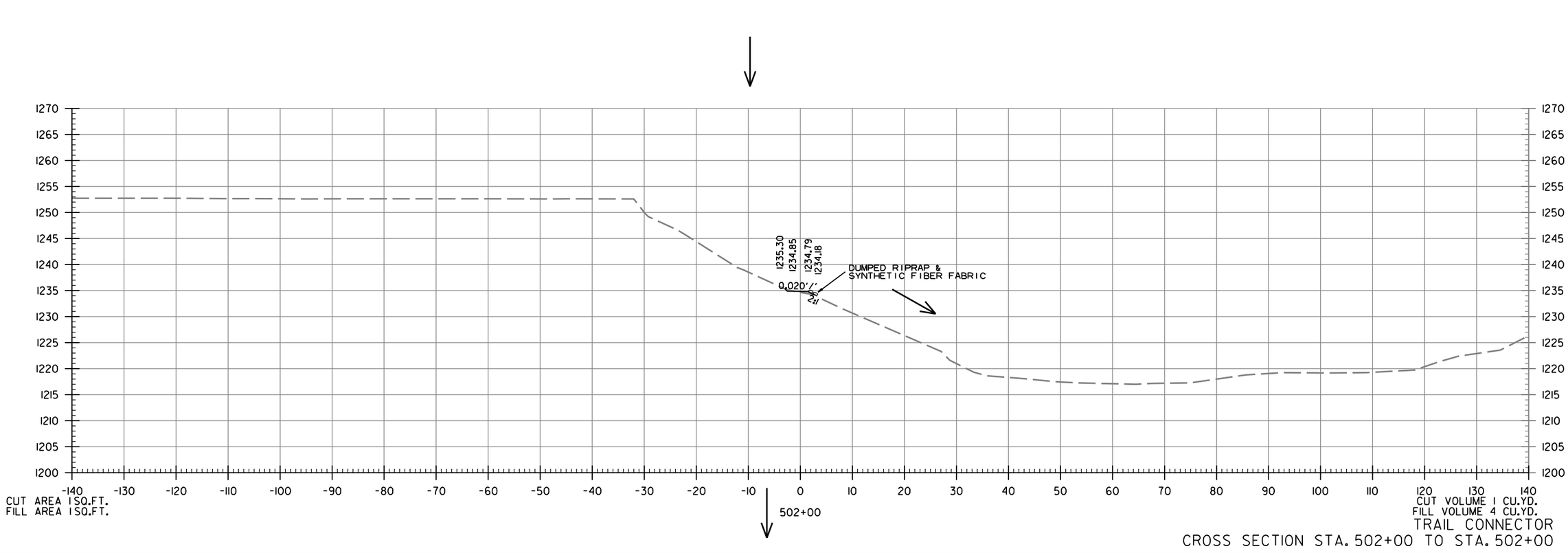

mh39735 7/13/2023
R090523.DGN

DATE REVISED	DATE REVISED	FED.RD. DIST.NO.	STATE	JOB NO.	SHEET NO.	TOTAL SHEETS
		6	ARK.	090523	103	103
		CROSS SECTIONS				

CUT AREA 0 SQ.FT.
FILL AREA 0 SQ.FT.

CUT VOLUME 0 CU.YD.
FILL VOLUME 0 CU.YD.

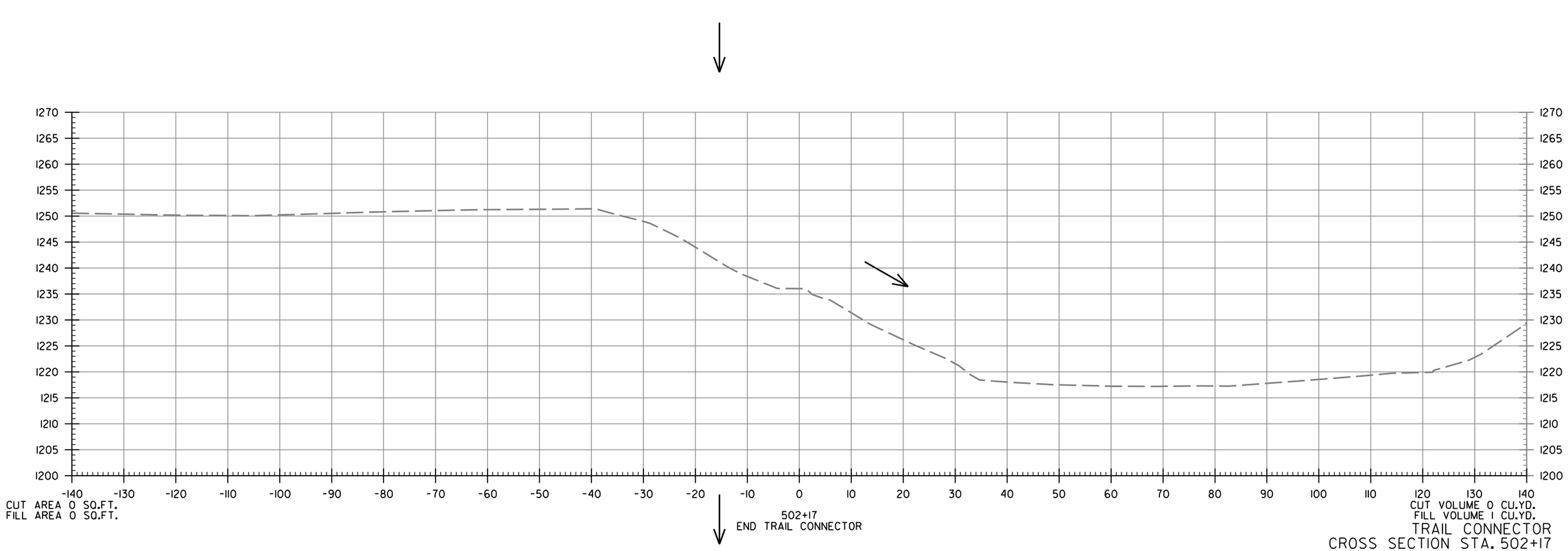

TRAIL CONNECTOR
CROSS SECTION STA. 502+17

mh39735 7/13/2023
R090523.DGN

DATE REVISED	DATE FILMED	DATE REVISED	DATE FILMED	FED. ROAD DIST. NO.	STATE	FED. AID PROJ. NO.	SHEET NO.	TOTAL SHEETS
				6	ARK.			
				JOB NO.				
				(1) EMBANKMENT & BACKFILL 55000				

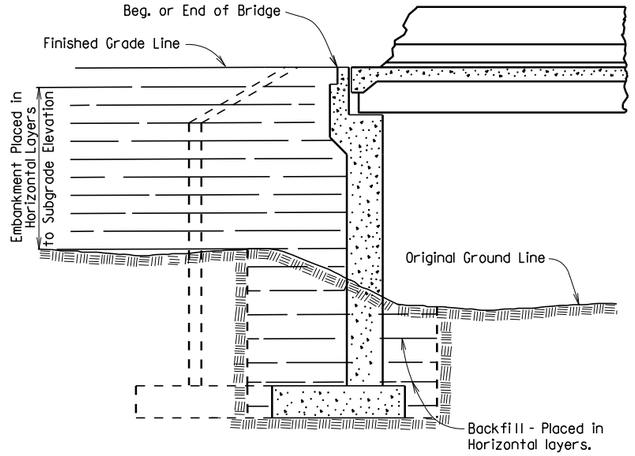

EMBANKMENT CONSTRUCTION AND FOOTING BACKFILL AT VERTICAL WALL ABUTMENTS

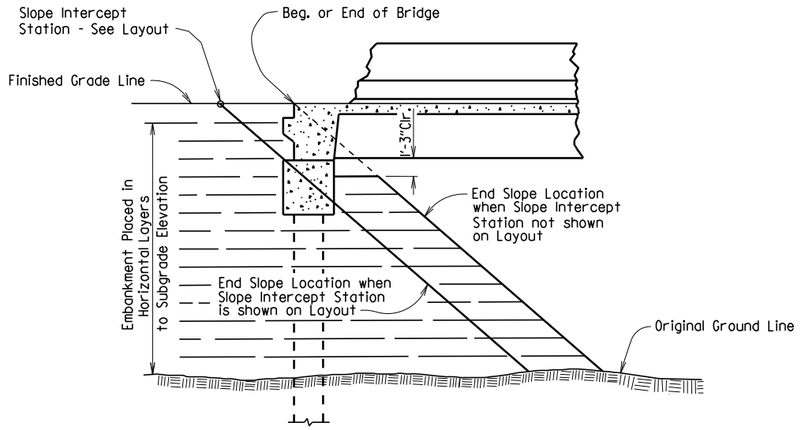

EMBANKMENT CONSTRUCTION AT SPILL-THROUGH PILE END BENTS

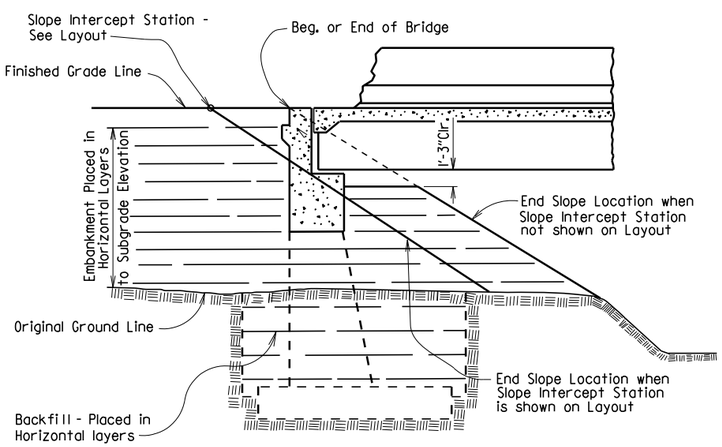

EMBANKMENT CONSTRUCTION AND FOOTING BACKFILL AT SPILL-THROUGH END BENTS

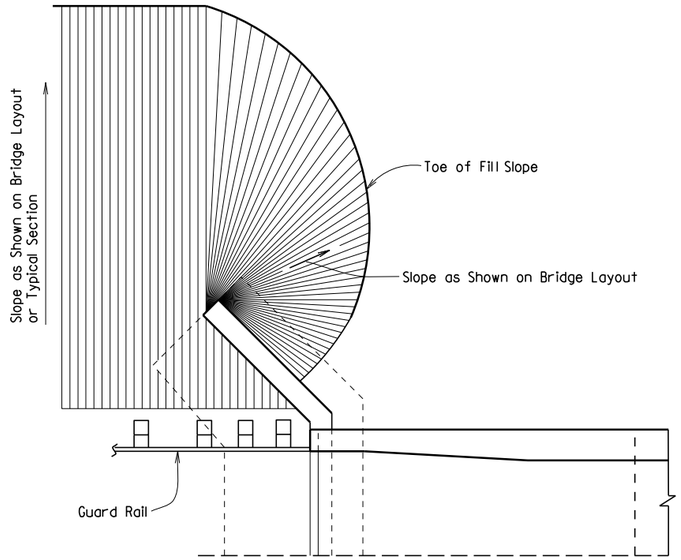

VERTICAL WALL ABUTMENTS

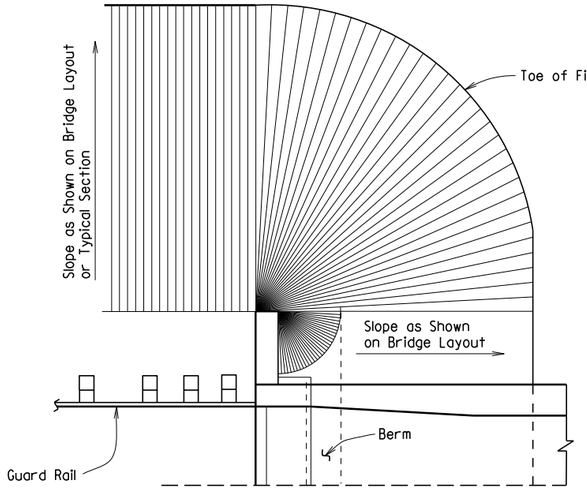

SPILL-THROUGH END BENTS WITH STUB WING

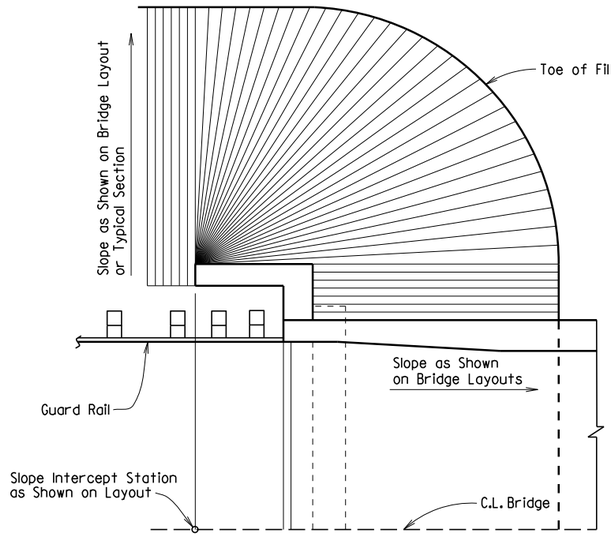

SPILL-THROUGH END BENTS WITH TURNBACK WING

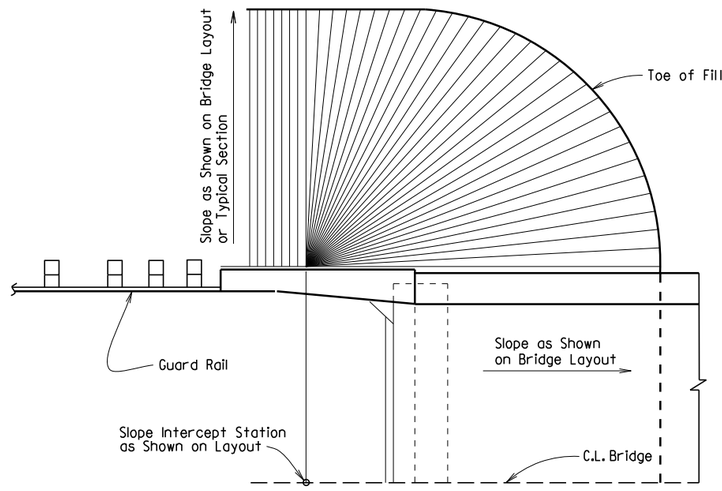

SPILL-THROUGH END BENTS WITH TRANSITION WING

METHOD OF DETERMINING FILL SLOPE LOCATION AT BRIDGE ENDS

GENERAL NOTES

The Bridge End Embankment shall be defined as a section of embankment, not less than 20 feet long adjacent to the bridge end, together with the side slopes and slopes under the bridge end including around the end of wingwalls. Embankment adjacent to structures shall be constructed in 6 inch horizontal layers (loose measure) and compacted by the use of mechanical equipment to the satisfaction of the Engineer. Refer to Subsections 210.09, 210.10 and 801.08 for construction requirements.

STANDARD DETAILS FOR EMBANKMENT CONSTRUCTION AND BACKFILL AT BRIDGE ENDS

ARKANSAS STATE HIGHWAY COMMISSION

LITTLE ROCK, ARK.

DRAWN BY: KDH DATE: 2-27-2014 FILENAME: b55000.dgn

CHECKED BY: BEF DATE: 2-27-2014 SCALE: NO SCALE

DESIGNED BY: STD. DATE: -

DRAWING NO. 55000

DATE REVISED	DATE FILMED	DATE REVISED	DATE FILMED	FED. ROAD DIST. NO.	STATE	FED. AID PROJ. NO.	SHEET NO.	TOTAL SHEETS
				6	ARK.			
				JOB NO.				

(1) RIPRAP & EXCAV. 55001

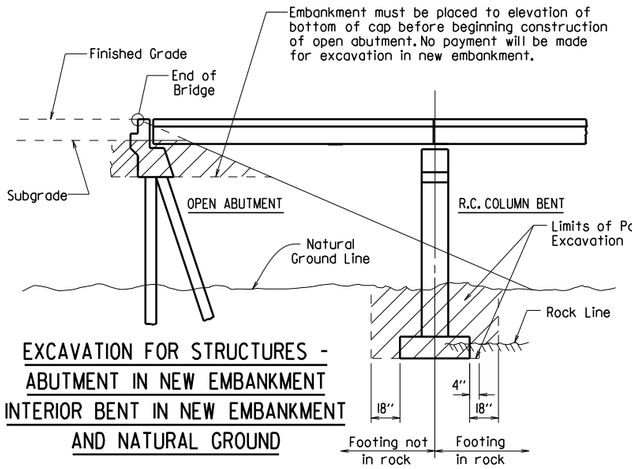

EXCAVATION FOR STRUCTURES - ABUTMENT IN NEW EMBANKMENT INTERIOR BENT IN NEW EMBANKMENT AND NATURAL GROUND

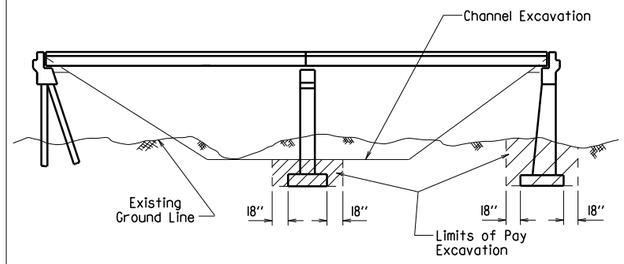

EXCAVATION FOR STRUCTURES - BRIDGE LOCATION WITH DESIGNATED CHANNEL CHANGE

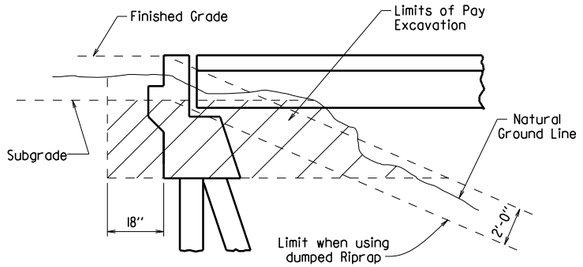

EXCAVATION FOR STRUCTURES - ABUTMENT IN NATURAL GROUND

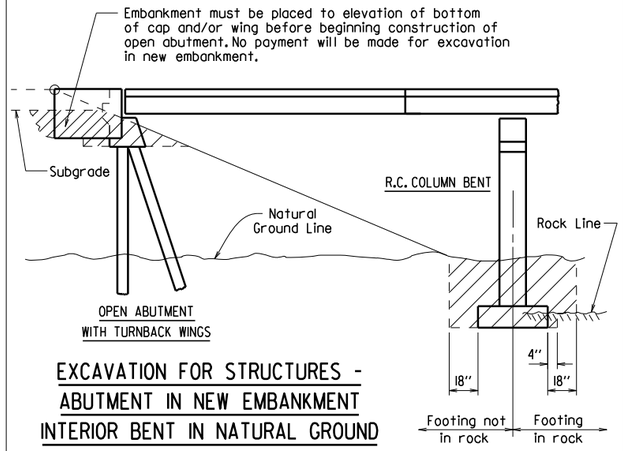

EXCAVATION FOR STRUCTURES - ABUTMENT IN NEW EMBANKMENT INTERIOR BENT IN NATURAL GROUND

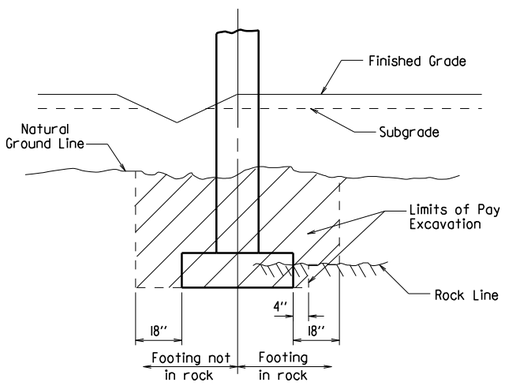

EXCAVATION FOR STRUCTURES - BENT IN ROADWAY FILL SECTION AND NATURAL GROUND

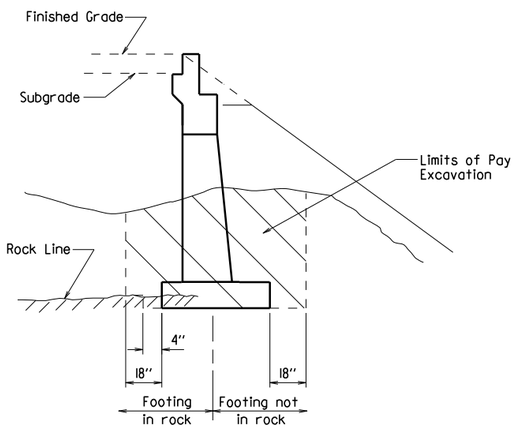

EXCAVATION FOR STRUCTURES - ABUTMENT IN NATURAL GROUND AND NEW EMBANKMENT

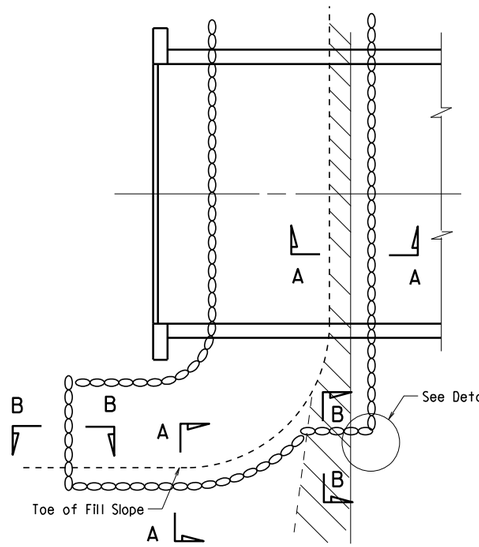

PLAN OF DUMPED RIPRAP

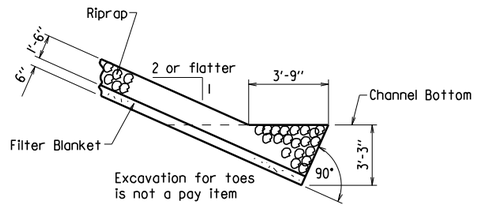

SECTION A-A

(Toe Excavation in Soil)

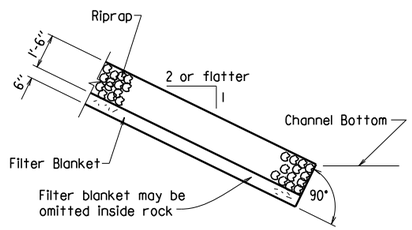

SECTION A-A

(Toe Excavation in Rock)

Note : Use this type of toe when rock is encountered which is in a stable condition.

Note : In lieu of an aggregate filter blanket, a synthetic fiber geotextile fabric complying with the requirements of Subsection 816.02(e) may be used.

Note : Details for computing excavation for structures are included for information as to how plan quantities were calculated and for use when adjusting quantities when changing footing elevation.

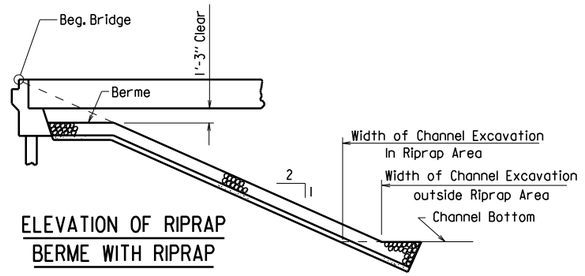

ELEVATION OF RIPRAP BERME WITH RIPRAP

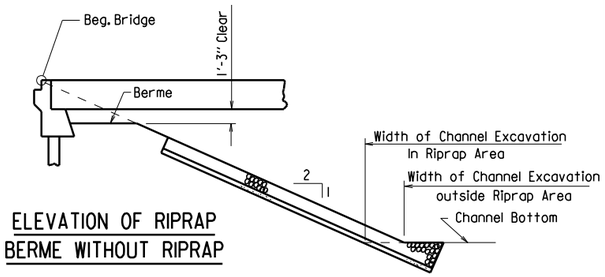

ELEVATION OF RIPRAP BERME WITHOUT RIPRAP

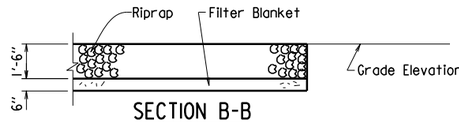

SECTION B-B

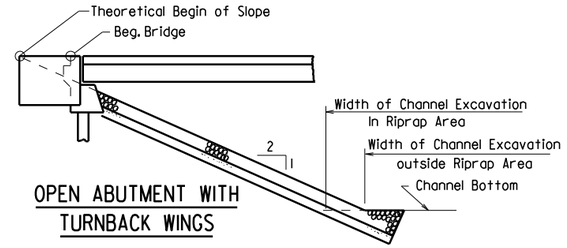

OPEN ABUTMENT WITH TURNBACK WINGS

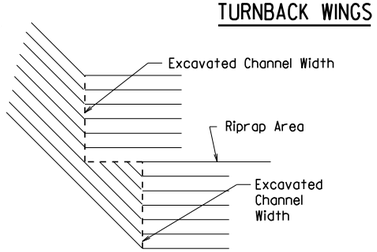

DETAIL C

STANDARD DETAILS FOR DUMPED RIPRAP AND FILTER BLANKET AND COMPUTING EXCAVATION FOR STRUCTURES

ARKANSAS STATE HIGHWAY COMMISSION

LITTLE ROCK, ARK.

DRAWN BY: KDH DATE: 2-27-2014 FILENAME: b55001.dgn

CHECKED BY: BEF DATE: 2-27-2014 SCALE: NO SCALE

DESIGNED BY: STD. DATE:

DRAWING NO. 55001

DATE REVISED	DATE FILMED	DATE REVISED	DATE FILMED	FED. ROAD DIST. NO.	STATE	FED. AID PROJ. NO.	SHEET NO.	TOTAL SHEETS
3/24/16				6	ARK.			
				JOB NO.				
				①	BRIDGE DECK FORMS		55005	

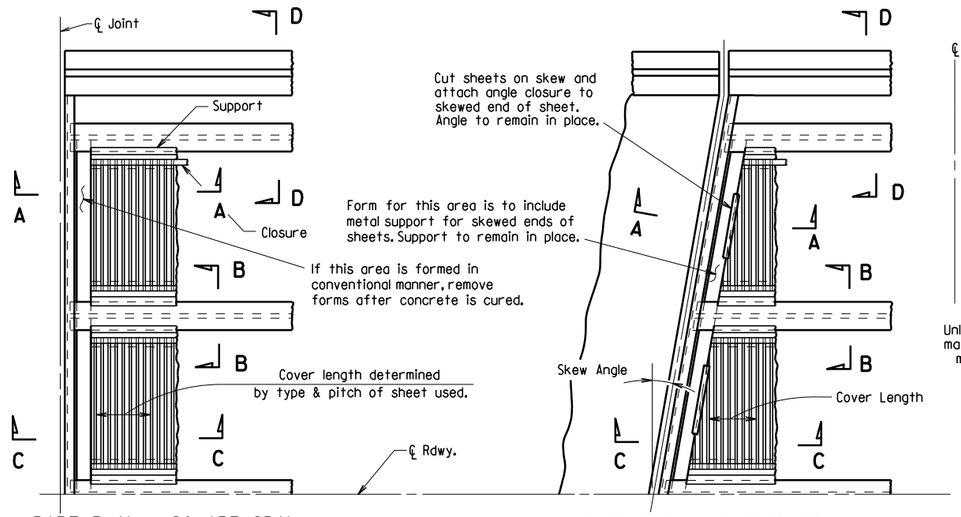

PART PLAN - SQUARE SPAN

3/8" = 1'-0"

PART PLAN - SKEWED SPAN

3/8" = 1'-0"

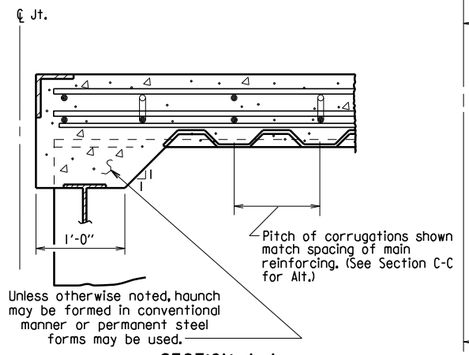

SECTION A-A

N.T.S.
(Angle at end of span)

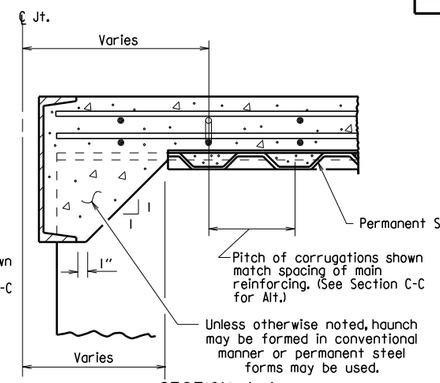

SECTION A-A

N.T.S.
(Channel at end of span)

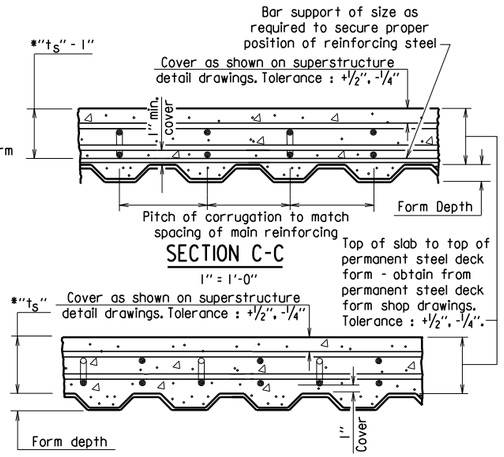

SECTION C-C

1" = 1'-0"

SECTION C-C - ALTERNATE

1" = 1'-0"
(Applicable when corrugations do not match spacing of main reinforcement)

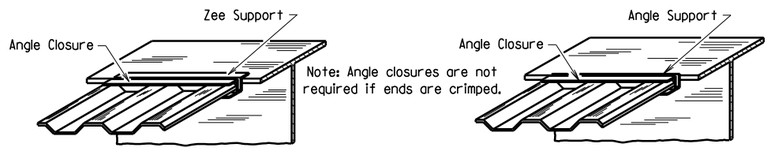

SKETCH OF PERMISSIBLE SUPPORTS

N.T.S.

*"t_s" = slab thickness as shown on superstructure detail drawings.

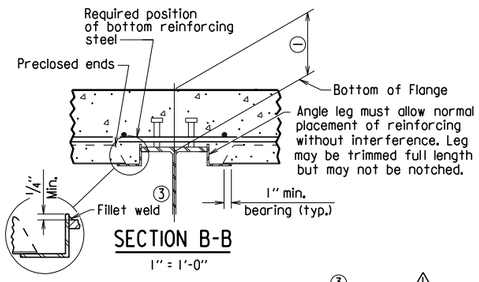

SECTION B-B

1" = 1'-0"
(Showing permissible support for tension flange where shear connectors are used, and for all compression flanges)

③ ⚠ Minimum weld: 1/8" x 1" @ 18". More weld may be required; maximum length per weld = 1 1/2" (typ.)

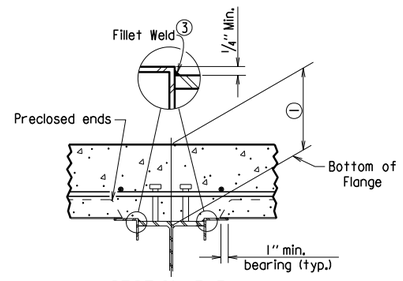

SECTION B-B

1" = 1'-0"
(Showing permissible support for tension flange where shear connectors are used and for all compression flanges)

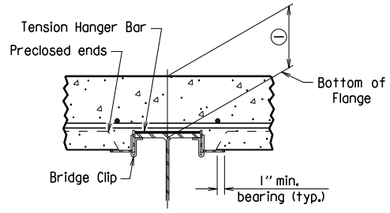

SECTION B-B

1" = 1'-0"
(Showing permissible support for tension flange where shear connectors are not used)

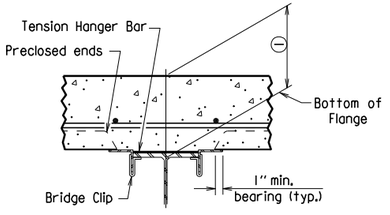

SECTION B-B

1" = 1'-0"
(Showing permissible support for tension flange where shear connectors are not used)

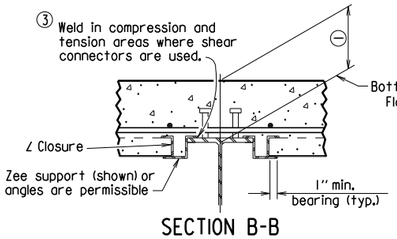

SECTION B-B

1" = 1'-0"
(Showing ∠ Closure)

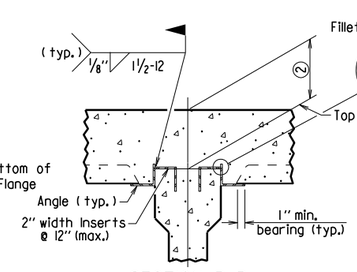

SECTION B-B (FOR CONCRETE GIRDERS)

1" = 1'-0"
(Showing support by Insert cast in girder)

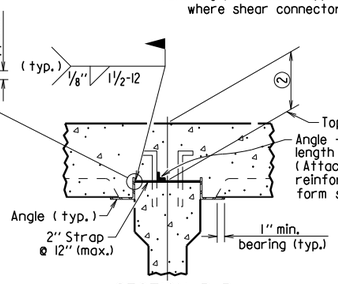

SECTION B-B (FOR CONCRETE GIRDERS)

1" = 1'-0"
(Showing support by Strap)

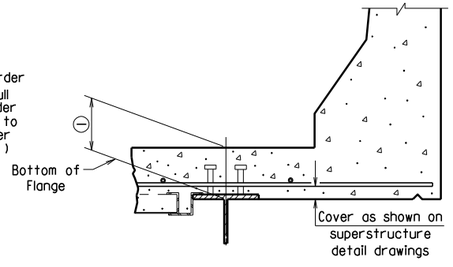

SECTION D-D

1" = 1'-0"
Note: Only Bottom Reinforcing is shown.

① Distance from top of slab to bottom of top flange as measured at centerline girder and as shown on superstructure detail drawings. This dimension may vary within the following limits to maintain the grade and slab thickness tolerances : Minimum - occurs when either the top flange or the support angle leg contacts the bottom reinforcing steel; Maximum = t_s + 1 3/4" + flange thickness. See Section C-C for slab thickness tolerance between adjacent girder flanges.

② Distance from top of slab to top of girder as measured at centerline girder and as shown on superstructure detail drawings. This dimension may vary within the following limits to maintain the grade and slab thickness tolerances : Minimum - occurs when either the top of girder or the support angle leg contacts the bottom reinforcing steel; Maximum - value shown on the superstructure detail drawings when removable forms are used. See Section C-C for slab thickness tolerance between adjacent girder flanges.

⚠ Revised weld dimension by KWY, Ck'd. by BEF, 3/24/16.

GENERAL NOTES

Permanent steel deck forms may be used at the Contractor's option and shall be at no additional cost to the Department. Such use may result in changes to the dead load deflection of the girder. Any cost for adjustments due to a change in the dead load deflection will be borne by the Contractor. Payment for deck concrete and structural steel will not be increased due to use of permanent steel deck forms.

Permanent steel deck forms shall conform to Subsection 802.14(b). Detailed plans, including detailed calculations and manufacturer's technical brochure, shall be submitted to and approved by the Engineer before work of forming the bridge deck is started.

Welding of form supports to the tension flange of steel girders will be permitted only in areas where shear connectors are used. When welding is not allowed, the method of fastening Z or ∠ supports to the flange must be approved by the Engineer.

Form sheets shall be fastened to supporting members and to each other with galvanized metal screws sufficient in size and number to provide a secure attachment. Alternate methods of attachment must be approved by the Engineer.

When the pitch of form corrugations match the reinforcing spacing, transversely align form sheets across the bridge to maintain the correct orientation of continuous reinforcing bars in the corrugations.

Bar support rods, when used, shall be sized and spaced to adequately support the bottom reinforcing mat at the required position.

High chairs shall be sized to support the top mat of reinforcing at the proper position. High chairs shall be placed at locations shown on the detail drawings.

Specifications: Arkansas State Highway and Transportation Department Standard Specifications for Highway Construction (2014 Edition), with applicable Supplemental Specifications and Special Provisions.

STANDARD DETAILS FOR PERMANENT STEEL BRIDGE DECK FORMS FOR STEEL & CONCRETE GIRDER SPANS

ARKANSAS STATE HIGHWAY COMMISSION

LITTLE ROCK, ARK.

DRAWN BY: KDH DATE: 2-27-2014 FILENAME: b55005.dgn
CHECKED BY: BEF DATE: 2-27-2014 SCALE: NONE
DESIGNED BY: STD. DATE: —

DRAWING NO. 55005

DATE REVISED	DATE FILMED	DATE REVISED	DATE FILMED	FED. ROAD DIST. NO.	STATE	FED. AID PROJ. NO.	SHEET NO.	TOTAL SHEETS
				6	ARK.			
				JOB NO.				
				①		GENERAL NOTES		55006

GENERAL NOTES

These GENERAL NOTES are applicable unless otherwise shown in the Plan Details, Special Provisions, or Supplemental Specifications.

CONSTRUCTION SPECIFICATIONS: Arkansas State Highway and Transportation Department Standard Specifications for Highway Construction (2014 Edition) with applicable Supplemental Specifications and Special Provisions. Section and Subsection refer to the Standard Specifications.

DESIGN SPECIFICATIONS: See Bridge Layout(s).

SUPERSTRUCTURE NOTES:

MATERIALS AND STRENGTHS:

Class S(AE) Concrete	f'c =	4,000 psi
Reinforcing Steel (Gr. 60, AASHTO M 31 or M 322, Type A)	fy =	60,000 psi
Structural Steel (AASHTO M 270, Gr. 36)	Fy =	36,000 psi
Structural Steel (AASHTO M 270, Gr. 50)	Fy =	50,000 psi
Structural Steel (AASHTO M 270, Gr. 50W)	Fy =	50,000 psi
Structural Steel (AASHTO M 270, Gr. HPS70W)	Fy =	70,000 psi

See Plan Details for Grade(s) of Structural Steel required.

CONCRETE:

All concrete shall be Class S(AE) with a minimum 28 day compressive strength f'c = 4,000 psi. Concrete shall be poured in the dry and all exposed corners shall be chamfered ¾" unless otherwise noted.

The superstructure details shown are for use when removable deck forming is used and are the basis for measurement of Class S(AE) Concrete. See Standard Drawing No. 55005 for allowable modifications and for tolerances when Permanent Steel Bridge Deck Forms are used.

Use of a longitudinal screed is not permitted on any span of a bridge deck with horizontal curvature.

The concrete deck (roadway surface) shall be given a tine finish in accordance with Subsection 802.19 for Class 5 Tined Bridge Roadway Surface Finish. Sidewalks shall receive a broomed finish as specified for final finishing in Subsection 802.19 for Class 6 Broomed Finish. Movement of the finishing machine across new concrete shall be on planks placed on the surface and shall be prohibited for 72 hours after finishing the pour. Sufficient concrete must be placed ahead of the strike-off to fully load the beam or girder. When permitted, the use of a longitudinal strike-off will require that a vertical camber adjustment be made in the strike-off to account for the future dead load deflection due to any railings, median barrier, and sidewalks.

REINFORCING STEEL:

All reinforcing steel shall be Grade 60 conforming to AASHTO M 31 or M 322, Type A, with mill test reports and shall be epoxy coated. The reinforcing steel is to be accurately located in the forms and firmly held in place by steel wire supports, sufficient in number and size to prevent displacement during the course of construction. The wire supports will not be paid for directly, but will be considered subsidiary to the item "Epoxy Coated Reinforcing Steel (Grade 60)".

STRUCTURAL STEEL (COMMON TO W-BEAMS AND PLATE GIRDERS):

Structural steel shall be AASHTO M 270 with grade and payment as specified in the plans. Grade 50W steel shall not be painted and all exposed surfaces shall be cleaned in accordance with Subsection 807.84(e). Grade 36 and Grade 50 steel shall be painted unless otherwise noted and all exposed surfaces shall be cleaned in accordance with Subsection 807.84. Structural steel completely embedded in concrete may be AASHTO M 270, Gr. 36, Gr. 50 or Gr. 50W unless otherwise noted.

Drawings show general features of design only. Shop drawings shall be made in accordance with the specifications, submitted and approval secured before fabrication is begun.

Requests for substitution of structural steel shapes shown with shapes of greater size must be submitted by the Contractor to the Engineer for approval. Steels of equal or greater strengths will be accepted only when shown on the approved shop drawings. Payment will be based on the basis of shapes and materials shown in the plans, and no additional compensation will be made for any adjustments due to substitutions.

All welding that is to be done during fabrication of structural steel, including temporary welds, shall be detailed on the shop drawings and submitted for approval. If additional welds are required, whether permanent or temporary, a formal request with detailed drawings shall be submitted to the Engineer for approval; however, additional welds used for attaching falsework support devices or screed rail supports to the structural steel that do not exceed the limitations of Subsection 802.13 will not require approval prior to construction. All welding shall conform to Subsection 807.26.

Unless otherwise noted, field connections shall be bolted with ¾" ø high-strength bolts using 13/16 " ø open holes. Holes for ¾" ø high-strength bolts may be 15/16 " ø if a washer is supplied for use under both the nut and head of the bolt. The use of oversized holes will not be allowed on main members unless otherwise noted. Bolts shall be placed with heads on the outside face of the exterior beam or girder webs and on the bottom of the beam or girder flanges.

All stud shear connectors shall be granular flux filled, solid fluxed, or equal and shall be automatically end welded in accordance with recommendations of the Manufacturer.

When painting is required, all structural steel except galvanized steel and steel completely encased in concrete shall be painted in accordance with Subsection 807.75. The color of paint shall be as specified in the plans.

STRUCTURAL STEEL (W-BEAMS):

All beams and field splice plates, and all diaphragms and connection plates attached to horizontally curved beams are considered main load carrying members and shall meet the Longitudinal Charpy V-Notch Test specified in Subsection 807.05. This work and material will not be paid for directly, but shall be considered subsidiary to the item "Structural Steel in Beam Spans (M 270, Gr. ___)".

All beams in continuous units and simple spans with field splices shall be blocked in their true position in the shop in groups as specified in Subsection 807.54(b)(2) with the webs horizontal. The camber, length of sections, distance between bearings, and openings of joints shall be measured and this information shall become part of the permanent records. The component parts shall be match marked in this assembly and these marks shall be shown on the erection diagram.

All beams in simple spans without field splices shall be blocked in their true position with webs horizontal. The camber, distance between bearings, and openings of joints shall be measured and this information shall become part of the permanent records.

Flange field splice plates shall be cut and fabricated so that the primary direction of rolling is parallel to the direction of the main tensile and/or compressive stresses.

All beam dimensions are based on a temperature of 60 degrees F. A tolerance of ¼" +/- is allowed for camber.

Bent plate diaphragms for horizontally curved beams shall be cut and fabricated so that the primary direction of rolling is parallel to the direction of the main tensile and/or compressive stresses. Bent plate diaphragms for straight beams may be cut and fabricated in accordance with Subsection 807.35 or as required for horizontally curved beams.

Unless otherwise noted, diaphragms shall be installed as beams are erected. All bolts in diaphragms and field splices shall be installed and tightened in accordance with Subsection 807.71 prior to pouring the concrete deck.

STRUCTURAL STEEL (PLATE GIRDERS):

All references to cross-frames shall include "X" or "K" types.

All girder web and flange plates, all field splice plates, and all diaphragms, cross-frames and connection plates attached to horizontally curved girders are considered main load carrying members and shall meet the Longitudinal Charpy V-Notch Test specified in Subsection 807.05. This work and material will not be paid for directly, but shall be considered subsidiary to the item "Structural Steel in Plate Girder Spans (M 270, Gr. ___)".

All girders in continuous units and simple spans with field splices shall be assembled in the shop as specified in Subsection 807.54(b)(2) and blocked in their true position with webs horizontal. The camber, length of sections, distance between bearings, and openings of joints shall be measured and this information shall become part of the permanent records. The component parts shall be match marked in this assembly and these marks shall be shown on the erection diagram.

All girders in simple spans without field splices shall be blocked in their true position with webs horizontal. The camber, distance between bearings, and openings of joints shall be measured and this information shall become part of the permanent records.

Web and flange plates for main members and flange splice plates for main members shall be cut and fabricated so that the primary direction of rolling is parallel to the direction of the main tensile and/or compressive stresses.

Girder webs may be made by shop splicing with minimum lengths of 25 feet for sections. Flange plates longer than 50 feet may be made by shop splicing with minimum lengths of 25 feet for sections. No additional payment will be made for shop welded splices.

All girder dimensions are based on a temperature of 60 degrees F. A tolerance of ¼" +/- is allowed for camber.

Groove welds in web and flange plates shall be Quality Control (Q.C.) tested by nondestructive testing, as required in Subsection 807.23(b). Fillet welds at flange to web plate connections shall be Q.C. tested by the magnetic particle method. All Q.C. testing shall be considered subsidiary to the item "Structural Steel in Plate Girder Spans (M 270, Gr. ___)".

Bent plate diaphragms for horizontally curved girders shall be cut and fabricated so that the primary direction of rolling is parallel to the direction of the main tensile and/or compressive stresses. Bent plate diaphragms for straight girders may be cut and fabricated in accordance with Subsection 807.35 or as required for horizontally curved girders.

Unless otherwise noted, cross-frames and diaphragms shall be installed as girders are erected. All bolts in cross-frames, diaphragms, and field splices shall be installed and tightened in accordance with Subsection 807.71 prior to pouring the concrete deck.

SUBSTRUCTURE NOTES:

CONCRETE:

Unless otherwise noted, concrete in caps, columns and footings (except seal footings) shall be Class "S" with a minimum 28 day compressive strength f'c = 3,500 psi and shall be poured in the dry. Seal Concrete for footings shall have a minimum 28 day compressive strength f'c = 2,100 psi.

Concrete in drilled shafts shall be Class "S" as modified by Job SP "Drilled Shaft Foundations".

All exposed corners shall be chamfered ¾" unless otherwise noted.

REINFORCING STEEL:

All reinforcing steel shall be Grade 60 (yield strength = 60,000 psi) conforming to AASHTO M 31 or M 322, Type A, with mill test reports.

Top reinforcing bars in cap shall be properly placed to avoid interference with anchor bolts or sheet metal sleeves.

STRUCTURAL STEEL:

Structural steel in end bents shall be AASHTO M 270 with grade and payment as specified in the plans.

FOR ADDITIONAL INFORMATION AND NOTES, SEE LAYOUT(S) AND PLAN DETAILS.

STANDARD GENERAL NOTES
FOR STEEL BRIDGE STRUCTURES

ARKANSAS STATE HIGHWAY COMMISSION
LITTLE ROCK, ARK.

DRAWN BY: A.M.S. DATE: 9-2-2015 FILENAME: b55006.dgn
CHECKED BY: B.E.F. DATE: 9-2-2015 SCALE: NO SCALE
DESIGNED BY: STD. DATE:

DRAWING NO. 55006

PRINT DATE: 11/7/2019

DATE REVISED	DATE FILMED	DATE REVISED	DATE FILMED	FED. ROAD DIST. NO.	STATE	FED. AID PROJ. NO.	SHEET NO.	TOTAL SHEETS
				6	ARK.			
				JOB NO.				
				①	STEEL BRIDGE STRUCTURES 55007			

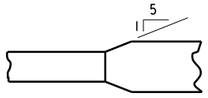

Plan-Unequal Width (Flg.)

FLANGE SPLICE

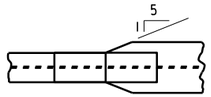

FLANGE SPLICE AT UNEQUAL BOTTOM FLANGE WIDTHS

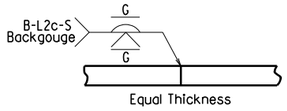

Equal Thickness

WEB & FLANGE SPLICE

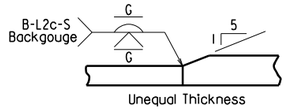

Unequal Thickness

FLANGE SPLICE

(Use when Base Metal Thickness is Equal to or Less than 2")

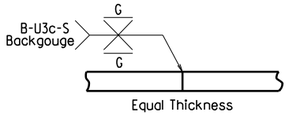

Equal Thickness

WEB & FLANGE SPLICE

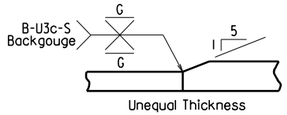

Unequal Thickness

FLANGE SPLICE

(Use when Base Metal Thickness is Greater than 2")

DETAILS OF WELDED SPLICES FOR PLATE GIRDERS

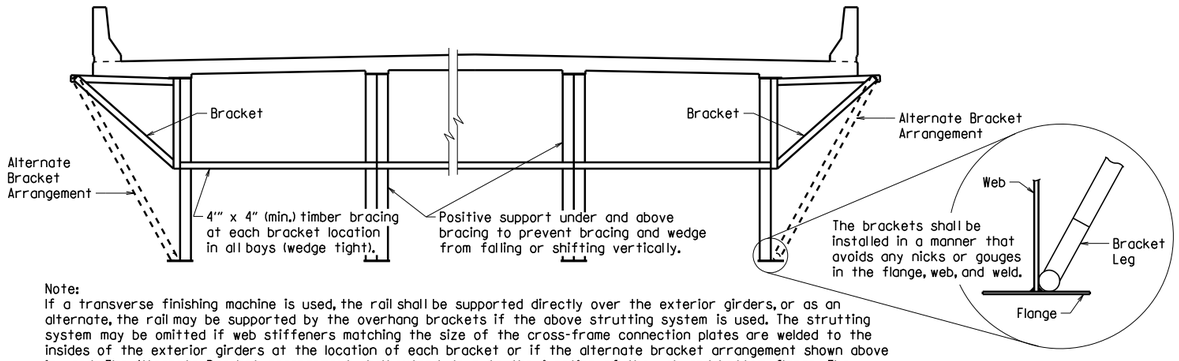

Note:
If a transverse finishing machine is used, the rail shall be supported directly over the exterior girders, or as an alternate, the rail may be supported by the overhang brackets if the above strutting system is used. The strutting system may be omitted if web stiffeners matching the size of the cross-frame connection plates are welded to the insides of the exterior girders at the location of each bracket or if the alternate bracket arrangement shown above is used. The Alternate Bracket arrangement shall extend down to the junction of the web and bottom flange. The stiffener shall conform to the details for cross frame connection plates shown on the plans. No direct payment will be made for brackets, timber bracing, supports, or welded stiffeners. Payment shall be subsidiary to "Structural Steel in Plate Girder Spans (___)".

SCREED RAIL SUPPORT FOR PLATE GIRDERS

(USE WHEN WEB DEPTHS ARE 48" OR GREATER)

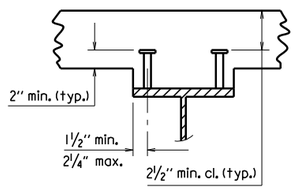

2 STUDS PER ROW

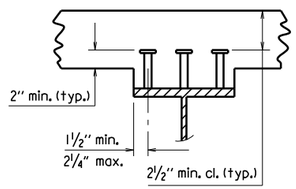

3 STUDS PER ROW

Stud Shear Connectors shall be automatically end welded to the beam or girder flange in accordance with the recommendations of the Manufacturer. See plan details for number and size.

SHEAR CONNECTOR DETAIL

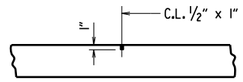

Use Type 3 or 4 Joint Sealer. See Subsections 501.02(h) and 501.05(j). Backer Rod filler will not be required. Joint Sealer shall be measured and paid for as Class S(AE) Concrete-Bridge. Slab Joints shall extend to the outside edge of the deck slab and shall align with open joints at the front face of the parapet. Slab joints shall be installed before the parapet railing is poured. If slab joints are to be sawed, they shall be sawed as soon as the concrete has sufficiently set to allow sawing of the joint without damage to the slab. Slab joints shall be placed at all pouring sequence construction joints and required slab joint locations. The joint sealer shall extend across the deck from gutterline to gutterline.

ADDITIONAL NOTES IF SIDEWALKS OR RAISED MEDIANS ARE REQUIRED:
Slab Joints shall be installed before the sidewalk or raised median is poured. After installation of the joint in the sidewalk or raised median and prior to pouring the parapet rail, the joint sealer shall be placed extending across the deck slab from gutterline to gutterline and acrosss the top of the sidwalk or raised median to the edge of the slab. No joint sealer shall be placed on the deck slab under the sidewalk or raised median.

TRANSVERSE SLAB JOINT DETAIL

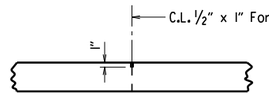

Use ½" x 1" Type 3 or 4 Joint Sealer. See Subsections 501.02(h) and 501.05(j). Backer Rod filler will not be required. Joint sealer shall be measured and paid for as Class S(AE) Concrete-Bridge. This joint shall be formed. Seal color shall be gray or other color similar to concrete.

LONGITUDINAL CONSTRUCTION JOINT

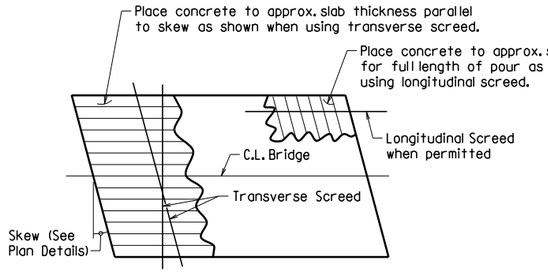

Note: At the Contractor's option, the transverse screed may be placed parallel to the skew or perpendicular to C.L. Bridge.

CONCRETE PLACEMENT PROCEDURE FOR BRIDGES WITH SKEW

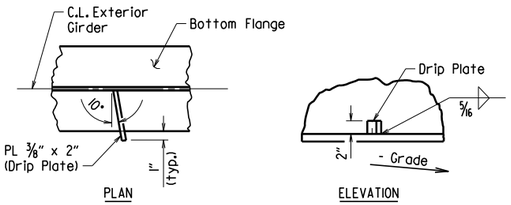

Drip Plate to be welded to the outer side of the bottom flange of the exterior girders.

Locate drip plate 5'-0" from C.L. Bearing on high side of each Bent, unless otherwise noted in the plans.

BOTTOM FLANGE DRIP PLATE

(USE WHEN WEB DEPTHS ARE 54" OR GREATER AND UNIT OR SPAN IS NOT IN LEVEL GRADE)

t_s = slab thickness. See "Typical Roadway Section" in the plans.

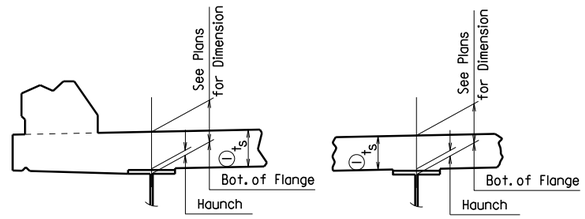

EXTERIOR BEAM OR GIRDER

INTERIOR BEAM OR GIRDER

① Tolerance when removable deck forming is used is + ½", - ¼". Haunch forming is required and shall be adjusted to maintain slab thickness tolerance.

NOTES:
Haunch dimension may vary within the following limits to maintain the grade and slab thickness tolerance: Minimum occurs when top flange contacts bottom reinforcing steel; Maximum = top flange thickness plus 1¾" unless otherwise noted in the plans. No increase in concrete and structural steel quantities will be made to maintain tolerances.

Tolerances shown are applicable only when removable deck forming is used. See Std. Dwg. No. 55005 for tolerances when permanent steel deck forms are used. Payment for concrete shall be based on removable deck forming.

ADJUSTMENT FOR SLAB THICKNESS TOLERANCE

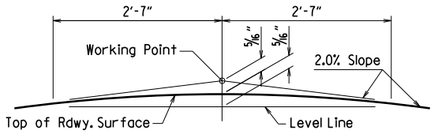

NOTE: Working Point matches Theoretical Roadway Grade.

ROUNDING DETAIL

BRIDGES IN NORMAL CROWN

WELD TABLE

Material Thickness of Thicker Part Joined (Inches)	Minimum Size of Fillet Weld (Inches)	Single Pass Weld Must Be Used
To ¾" Inclusive	¼"	
Over ¾"	5/16"	

NOTE: When a fillet weld size, as shown on the plans, is larger than the minimum, the first pass shall be that specified for minimum size of fillet weld.

SECTION AND SUBSECTION REFER TO THE ARKANSAS STATE HIGHWAY AND TRANSPORTATION DEPARTMENT STANDARD SPECIFICATIONS FOR HIGHWAY CONSTRUCTION (2014 EDITION).

THESE DETAILS ARE APPLICABLE UNLESS OTHERWISE SHOWN IN THE PLAN DETAILS, SPECIAL PROVISIONS, OR SUPPLEMENTAL SPECIFICATIONS.

STANDARD DETAILS FOR STEEL BRIDGE STRUCTURES

ARKANSAS STATE HIGHWAY COMMISSION

LITTLE ROCK, ARK.

DRAWN BY: JYP DATE: 2/11/2016 FILENAME: b55007.dgn

CHECKED BY: AMS DATE: 2/11/2016 SCALE: No Scale

DESIGNED BY: STD. DATE: —

DRAWING NO. 55007

DATE REVISED	DATE FILMED	DATE REVISED	DATE FILMED	FED. ROAD DIST. NO.	STATE	FED. AID PROJ. NO.	SHEET NO.	TOTAL SHEETS
				6	ARK.			
				JOB NO.				
				①		POURED SILICONE JOINT		55008

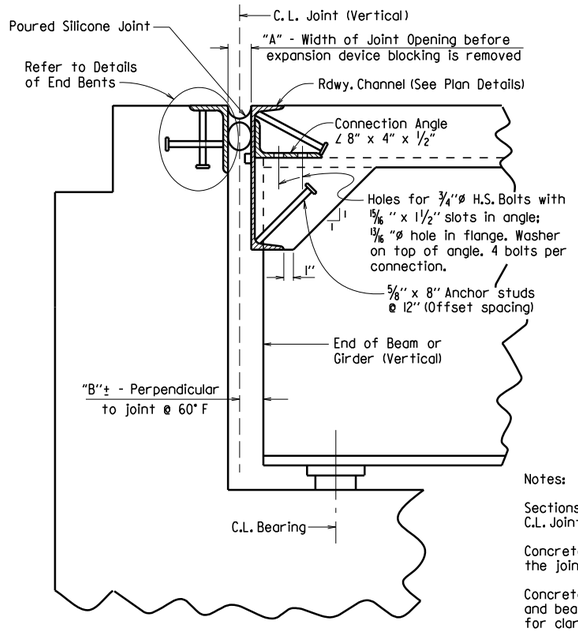

SECTION THRU JOINT AT END BENT

Notes:

Sections are taken perpendicular to C.L. Joint.

Concrete shall be hand packed under the joint armor.

Concrete diaphragms, steel diaphragms and bearing stiffeners are not shown for clarity. See plans for details.

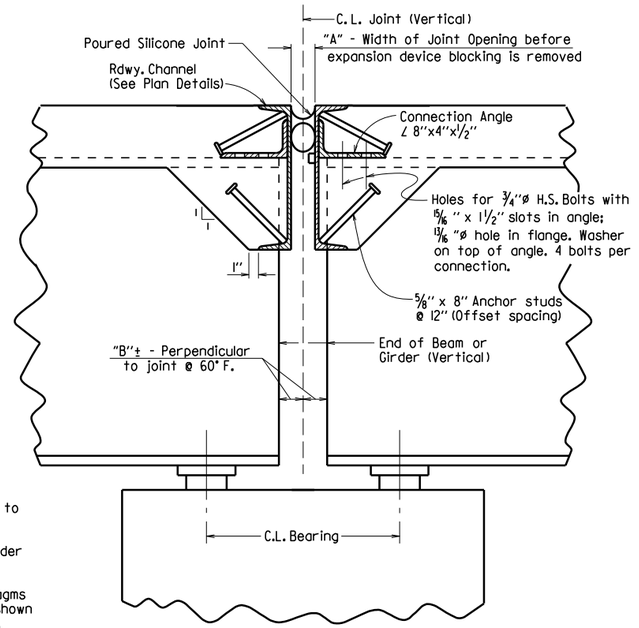

SECTION THRU JOINT AT INTERMEDIATE BENT

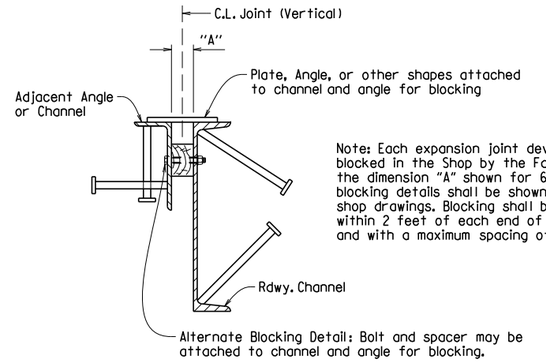

Note: Each expansion joint device shall be blocked in the Shop by the Fabricator to the dimension "A" shown for 60° F and the blocking details shall be shown on the shop drawings. Blocking shall be placed within 2 feet of each end of the device and with a maximum spacing of 8 feet.

DETAILS FOR BLOCKING EXPANSION JOINT DEVICE

EXPANSION DEVICE INSTALLATION AT END BENTS:

The Contractor may elect to install the expansion device using one of the following two alternatives:

1) The concrete span pour adjacent to joint shall be placed before the end bent backwall is placed. After the end bent backwall forms are in place and the beams or girders erected, the blocked expansion device shall be installed and adjusted for grade. All connection bolts shall be fully tightened prior to placing the deck concrete adjacent to the bent. Immediately prior to pouring the backwall concrete, the blocking shall be removed, and the opening adjusted for temperature and grade.

2) The backwall shall be poured to the optional construction joint after beams or girders are erected. The blocked expansion device shall be installed and adjusted for grade. All connection bolts shall be fully tightened prior to placing the deck concrete adjacent to the bent. Immediately prior to pouring the remainder of the backwall concrete, the blocking shall be removed and the opening adjusted for temperature and grade.

EXPANSION DEVICE INSTALLATION AT INTERMEDIATE BENTS:

After all beams or girders on each side of the joint are erected the blocked expansion device shall be installed and adjusted for grade. Deck concrete shall be placed for the entire unit or span on one side of the joint before deck concrete on the other side is placed. Connection bolts for the first side to have deck concrete placed shall be completely bolted. Bolts on the other side shall be loosely installed so that thermal and rotational movements will not be restricted during concrete placement on the first side.

Connection bolts on the second side shall remain loose until the concrete pour adjacent to the joint is to be placed. Immediately prior to pouring the span concrete on the second side, the blocking shall be removed, the joint adjusted for temperature and grade, and the connection bolts tightened.

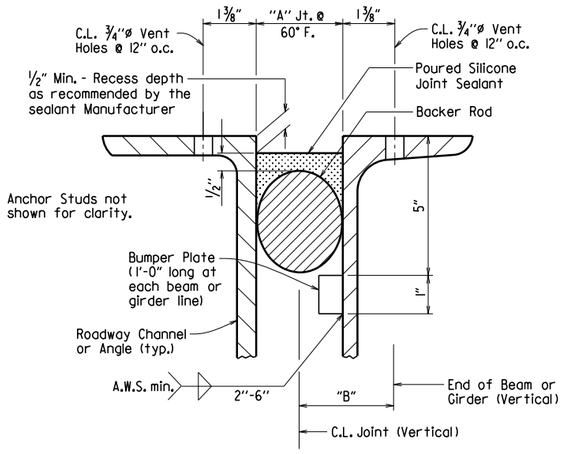

DETAIL OF POURED SILICONE JOINT

Silicone joint material and installation shall conform to Section 809. The temperature limitations recommended by the sealant Manufacturer shall be observed. The sealant shall be installed only when the average 24 hour air temperature is between 40° and 80° F.

Use an appropriately sized backer rod at the depth shown in the Manufacturer's literature based on the joint width at the time of sealing. Unless otherwise noted, do not install more backer rod than can be sealed in the same day.

The Contractor shall verify separation of the backer rod from the joint material after the joint material has set.

When bridge deck is constructed in stages, backer rods shall be extended beyond length of poured joint in initial construction stage so that the two pieces can be properly spliced together prior to installing sealant in subsequent stages. Manufacturer's recommendations shall be followed to prevent sealant from "running out of joint" during stage construction.

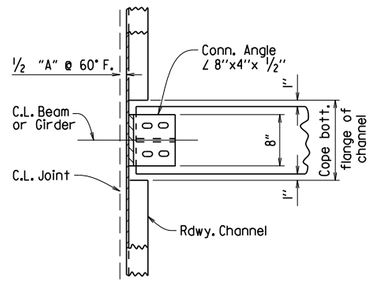

CHANNEL CONNECTION DETAIL

BENTS WITHOUT SKEW

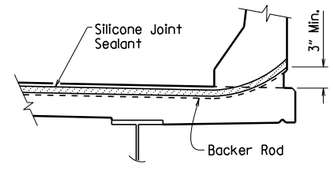

JOINT SEAL PLACEMENT AT RAIL

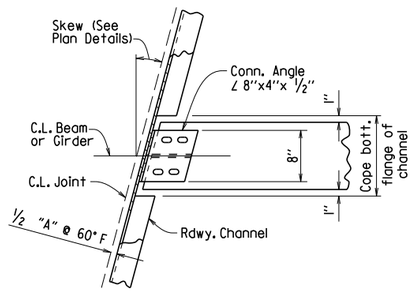

CHANNEL CONNECTION DETAIL

BENTS WITH SKEW

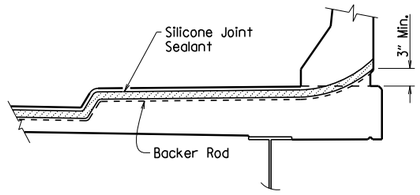

JOINT SEAL PLACEMENT AT SIDEWALK

SECTION AND SUBSECTION REFER TO THE ARKANSAS STATE HIGHWAY AND TRANSPORTATION DEPARTMENT STANDARD SPECIFICATIONS FOR HIGHWAY CONSTRUCTION (2014 EDITION).

THESE DETAILS ARE APPLICABLE UNLESS OTHERWISE SHOWN IN THE PLAN DETAILS, SPECIAL PROVISIONS, OR SUPPLEMENTAL SPECIFICATIONS. SEE "TABLE OF SILICONE JOINT DATA" IN PLAN DETAILS FOR VARIABLES "A" AND "B", AND BUMPER PLATE SIZE.

STANDARD DETAILS FOR POURED SILICONE JOINTS

ARKANSAS STATE HIGHWAY COMMISSION

LITTLE ROCK, ARK.

DRAWN BY: A.C.P. DATE: 2/11/2016 FILENAME: b55008.dgn

CHECKED BY: A.M.S. DATE: 2/11/2016 SCALE: No Scale

DESIGNED BY: STD. DATE: —

DRAWING NO. 55008

DATE REVISED	DATE FILMED	DATE REVISED	DATE FILMED	FED. ROAD DIST. NO.	STATE	FED. AID PROJ. NO.	SHEET NO.	TOTAL SHEETS
12-1-14		1-15-19		6	ARK.			
1-14-15		3-24-2020		JOB NO.				
1-17-17		5-11-2021						

1 TYPE D NAME PLATE - 55010

The name of the bridge as shown on the plans shall be placed on Lines 1-3 using ⅛" raised letters and numerals ⅜" high.

	Example 1	Example 2	Example 3	Example 4
Line 1	Red River	Southern	Saline	
Line 2	Relief	Railroad	River	Highway 5
Line 3		Overpass	Relief	

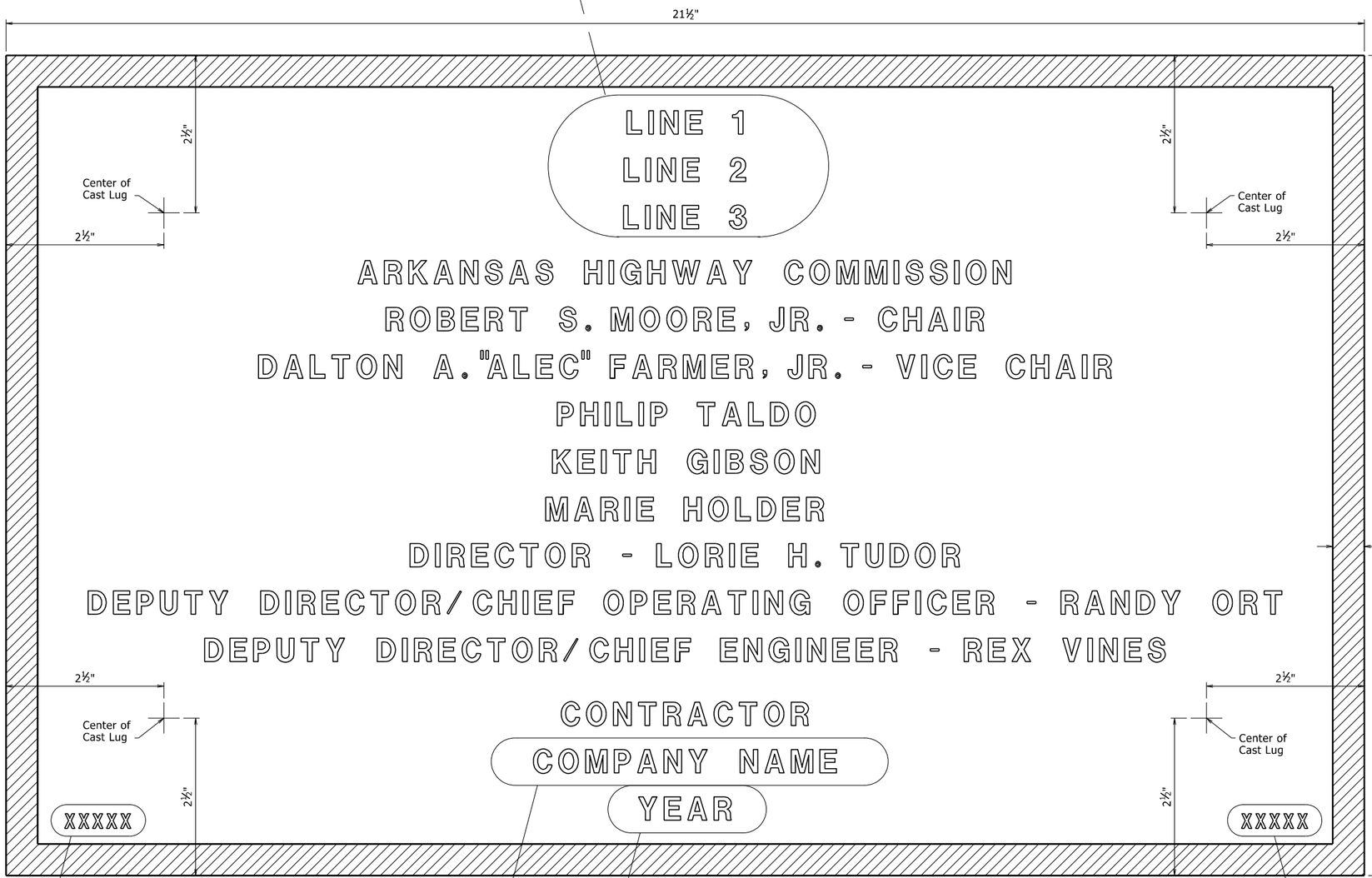

Place the design live loading here using ⅛" raised letters and numerals ¼" high. Examples: HS20, HL-93

Place the Year in which Contract was awarded here using ⅛" raised numerals ⅜" high. Example: 2001

Place the name of the company awarded the construction contract here using ⅛" raised letters and numerals ⅜" high. Example: ABCD CONSTRUCTION, INC.

Place the Bridge number here using ⅛" raised letters and numerals ¼" high. Examples: A1234, 05432

TYPICAL BRIDGE NAME PLATE

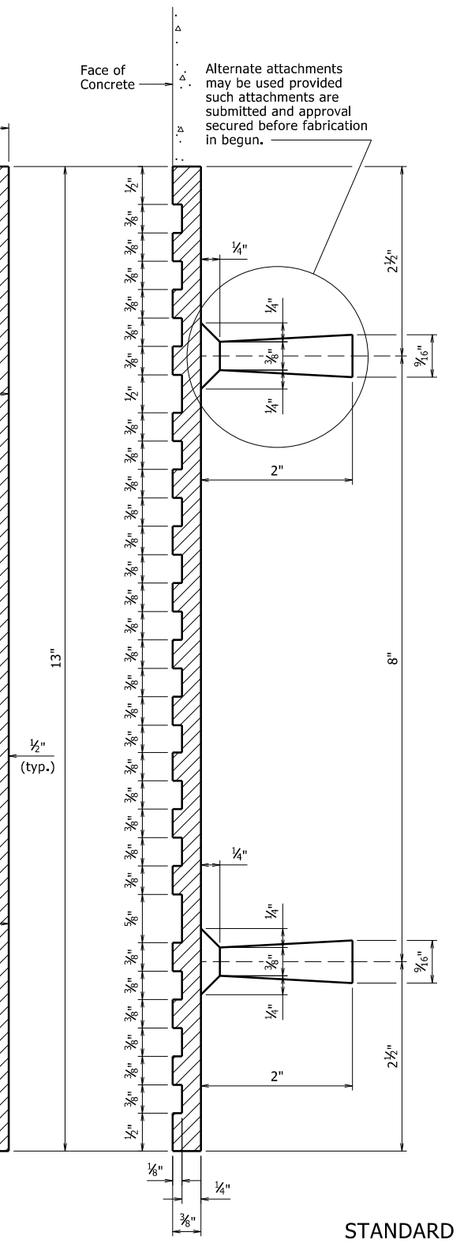

GENERAL NOTES

Specifications: Arkansas State Highway and Transportation Department Standard Specifications for Highway Construction, (2014 Edition) with applicable Supplemental Specifications and Special Provisions.

Name plates shall be cast bronze and shall meet the material requirements as specified in Section 812.

Body of plate shall be ¼" thick and shall include four tapering cone lugs ⅜" to 9/16" x 2" long. The border and all lettering shall be raised ⅛" above the face of plate and shall be polished.

All lettering shall be plain gothic, square cut and not tapered.

The number of plates required and the location and name on the plate for each bridge shall be as designated on the plans.

6 Revised Deputy Director/ Chief Engineer
5-11-2021 CGP Checked By: CRE

5 Revised Director, Deputy Director/Chief Operating Officer, Chair, Vice Chair and added New Commissioner
3-24-2020 CGP Checked By: CRE

4 Revised Chair and Vice Chair Added New Commissioner
1-15-19 CGP Checked By: CRE

3 Added New Commissioner
1-17-17 KDH Checked By: CRE

2 Revised Chair and Vice Chair Added New Commissioner
1-14-15 KDH Checked By: CRE

1 Revised Deputy Director/ Chief Engineer Added Deputy Director/ Chief Operating Officer
12-1-14 KDH Checked By: CRE

STANDARD DETAILS FOR
TYPE D BRIDGE NAME PLATE

ROUTE SEC.

ARKANSAS STATE HIGHWAY COMMISSION
LITTLE ROCK, ARK.

DRAWN BY: KDH DATE: 2-27-2014 FILENAME: b55010.dgn
CHECKED BY: BEF DATE: 2-27-2014 SCALE: NO SCALE
DESIGNED BY: STD. DATE:

DRAWING NO. 55010

PRINT DATE: 5/11/2021

DATE REVISED	DATE FILMED	DATE REVISED	DATE FILMED	FED. ROAD DIST. NO.	STATE	FED. AID PROJ. NO.	SHEET NO.	TOTAL SHEETS
3/24/16				6	ARK.			
				JOB NO.				
				①		STEEL H-PILES		55020

GENERAL NOTES FOR STEEL H-PILES:

Steel H-Piles shall conform to AASHTO M 270, Grade 36 or greater.

See Bridge Layout and Bent Details for pile size, estimated length, spacing, pile anchorage (if required) and for driving information.

Steel H-Piles that extend above the ground and are not protected by pile encasement shall be painted in accordance with Subsection 805.02.

Brackets, lugs, cap plates, pile tips, driving points, pile painting, splicing and welding shall not be paid for directly, but shall be considered subsidiary to the item "Steel Piling".

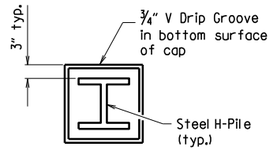

VIEW X-X

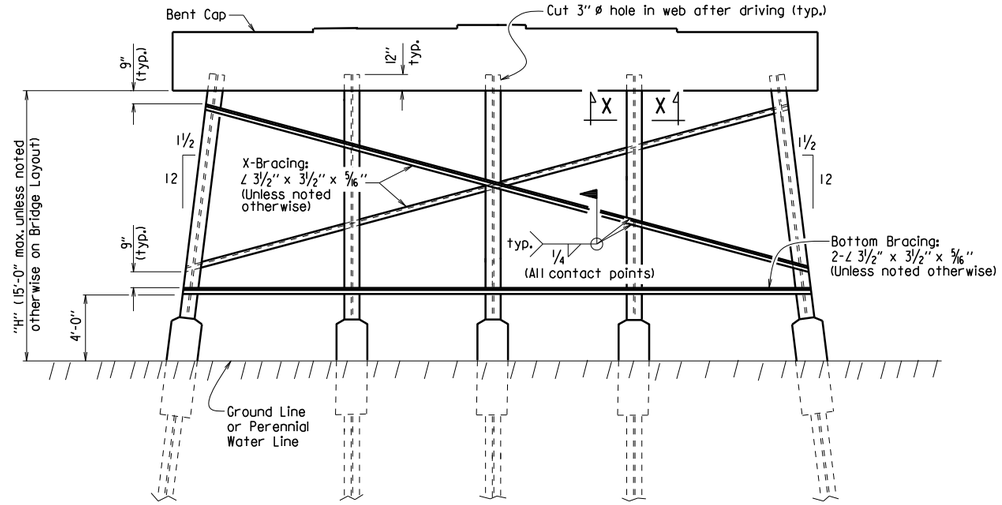

Notes:
All bracing shall be cut and welded in the field. Each brace shall be furnished in one piece. Payment shall be made under Item 807.

Unless noted otherwise, omit X-Bracing when "H" is less than 8 feet.

Omit X-Bracing and Bottom Bracing when "H" is 5 feet or less.

When required on the Bridge Layout sheet, pile encasements shall be constructed. See Notes and Details for H-Pile Encasements.

Omit all bracing (and V-groove in cap) when pile encasement is extended to bottom of bent cap.

TYPICAL DETAILS OF H-PILE TRESTLE INTERMEDIATE BENT

(Shown with Partial Height Encasement)

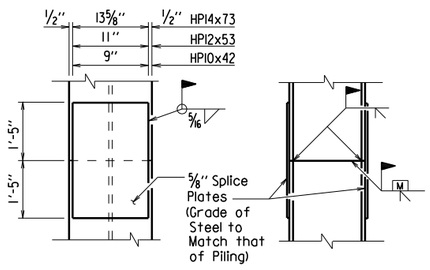

The Contractor may for his own convenience and at his own expense provide as many as three splices per pile. Minimum spacing between splices shall be 5 feet.

TYPICAL SPLICE DETAILS

⚠ H-pile splicers manufactured by Associated Pile and Fitting Corporation, LB Foster Piling, Skyline Steel or equivalent may be used in lieu of the "Typical Splice Details" shown. H-pile splicers shall match the same grade of steel specified for the piling and shall be welded to the pile with a 5/16" fillet weld around the entire perimeter of the splice. Flanges shall be welded with a complete penetration groove weld complying with AASHTO/AWS Joint Designation B-U4a or B-U4b. All welding shall conform to Subsection 807.26 of the AHTD Standard Specifcations for Highway Construction (2014 Edition).

Notes:
Steel pile tip reinforcing not required when approved H-Pile driving points are used.

Steel pile tip reinforcing shall not be paid for directly, but shall be considered subsidiary to the item "Steel Piling".

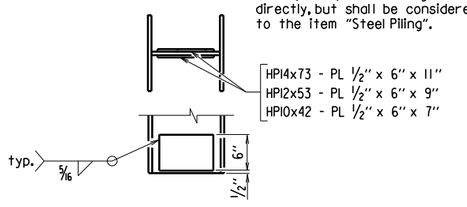

REINFORCING DETAIL FOR STEEL H-PILE TIP

GENERAL NOTES FOR H-PILE ENCASEMENTS:

⚠ See Bridge Layout for additional notes, any pile encasement restrictions and required location of pile encasements.

All concrete shall be Class S with a minimum 28-day compressive strength, f'c = 3,500 psi. If concrete cannot be placed in the dry, Seal Concrete may be used from top to bottom of encasement.

Reinforcing steel shall be Grade 60 conforming to AASHTO M 31 or M 322, Type A.

Welded Wire Fabric shall conform to AASHTO M 55 or M 221. Galvanized Corrugated Steel Pipe shall conform to AASHTO M 36 and M 218.

Concrete, welded wire fabric or reinforcing steel and galvanized pipe shall not be paid for directly, but shall be considered subsidiary to the item "Pile Encasement".

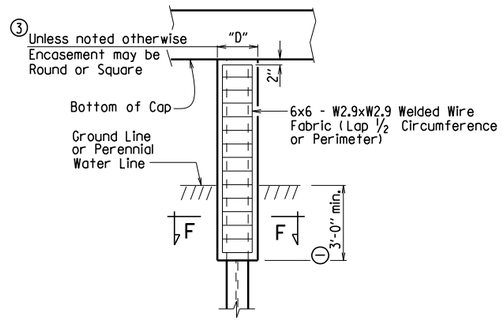

PILE ENCASEMENT DETAIL FOR STEEL H-PILES

④ (Shown with Encasement to Bottom of Cap)

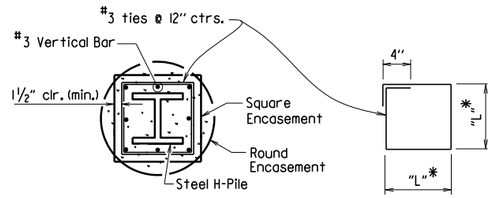

SECTION F-F

*Measured out-to-out of bar.

TABLE OF VARIABLES FOR PILE ENCASEMENT

Pile Size	"D" Square Encsmt.	"D" Round Encsmt.	"L"*
HPI0x42	1'-7"	2'-0"	1'-4"
HPI2x53	1'-8"	2'-2"	1'-5"
HPI4x73	1'-11"	2'-6"	1'-8"

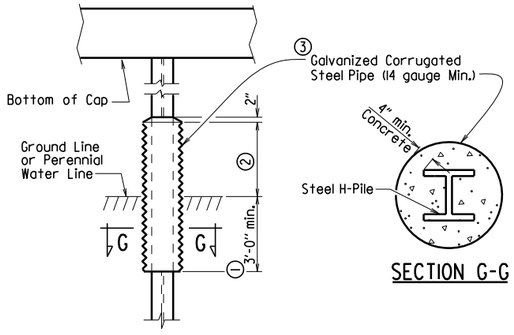

SECTION G-G

ALTERNATE PILE ENCASEMENT DETAIL FOR STEEL H-PILES

(Shown with Partial Height Encasement)

① Unless otherwise noted on Bridge Layout.

② 3'-0" minimum or as shown on Bridge Layout.

③ Encasement dimensions shall be sized to maintain a minimum concrete cover of 4" from the H-Pile. Reinforcement shall be sized to provide a minimum concrete cover of 1½" and a minimum clearance of 1¼" from the pile.

④ Alternate pile encasement, when not extended to bottom of cap, shall have 2" concrete taper for water runoff as shown in the Partial Height Encasement detail.

⚠ Added alternate method of splicing H-piles and revised pile encasement note.
3/24/2016 AMS

This document was originally issued and sealed by Charles R. Ellis, PE No. 9235, on March 24, 2016. This copy is not a signed and sealed document.

STATE OF ARKANSAS
REGISTERED PROFESSIONAL ENGINEER
No. 9235
CHARLES R. ELLIS

BRIDGE ENGINEER

STANDARD DETAILS FOR STEEL H-PILES AND PILE ENCASEMENTS

ARKANSAS STATE HIGHWAY COMMISSION

LITTLE ROCK, ARK.

DRAWN BY: A.M.S. DATE: 2/27/2014 FILENAME: b55020.dgn
CHECKED BY: B.E.F. DATE: 2/27/2014 SCALE: NO SCALE
DESIGNED BY: STD. DATE: —

DRAWING NO. 55020

DATE REVISED	DATE FILMED	DATE REVISED	DATE FILMED

FED. ROAD DIST. NO.	STATE	FED. AID PROJ. NO.	SHEET NO.	TOTAL SHEETS
6	ARK.			
JOB NO.				

TYPE CI APPROACH SLAB 55040CI

Notes:
The surface finish for Approach Slabs shall match that used on the bridge deck.

All longitudinal lines within the limits of horizontal curves shall be on curves concentric to C.L. Bridge. Adjustment to longitudinal bar lengths may be required. Transverse reinforcing shall be placed on radial lines to C.L. Bridge.

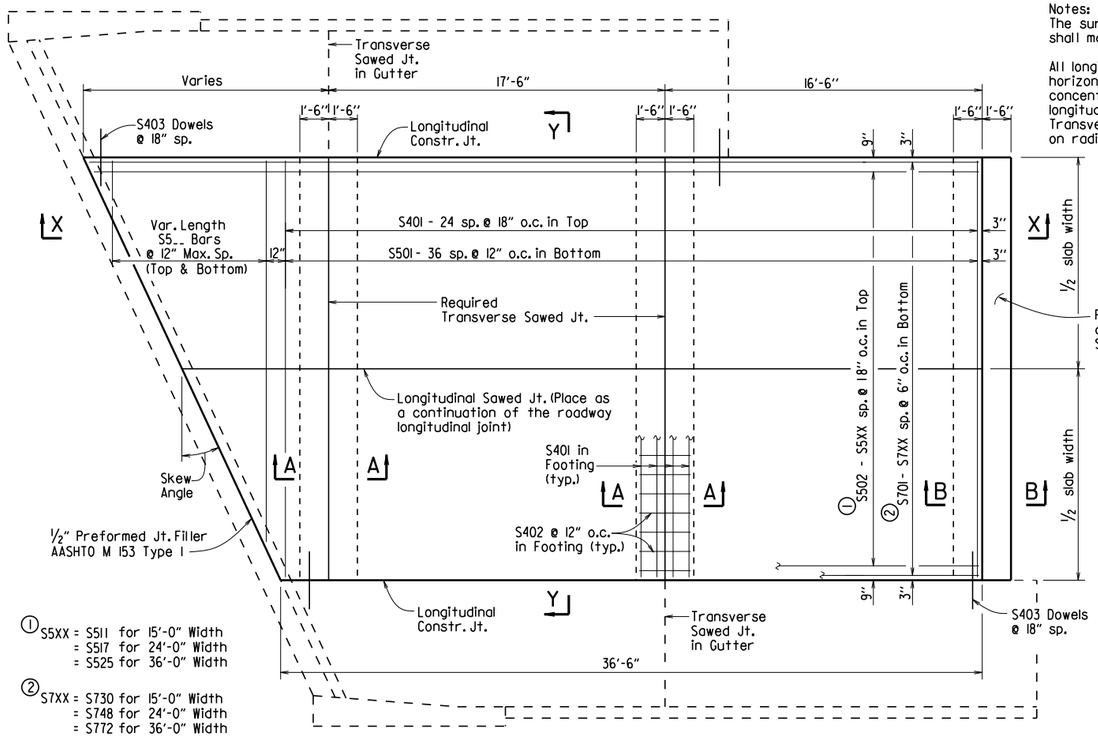

① S5XX = S511 for 15'-0" Width
= S517 for 24'-0" Width
= S525 for 36'-0" Width

② S7XX = S730 for 15'-0" Width
= S748 for 24'-0" Width
= S772 for 36'-0" Width

PLAN - SKEWED APPROACH SLAB WITH APPROACH GUTTERS

1/4" = 1'-0"

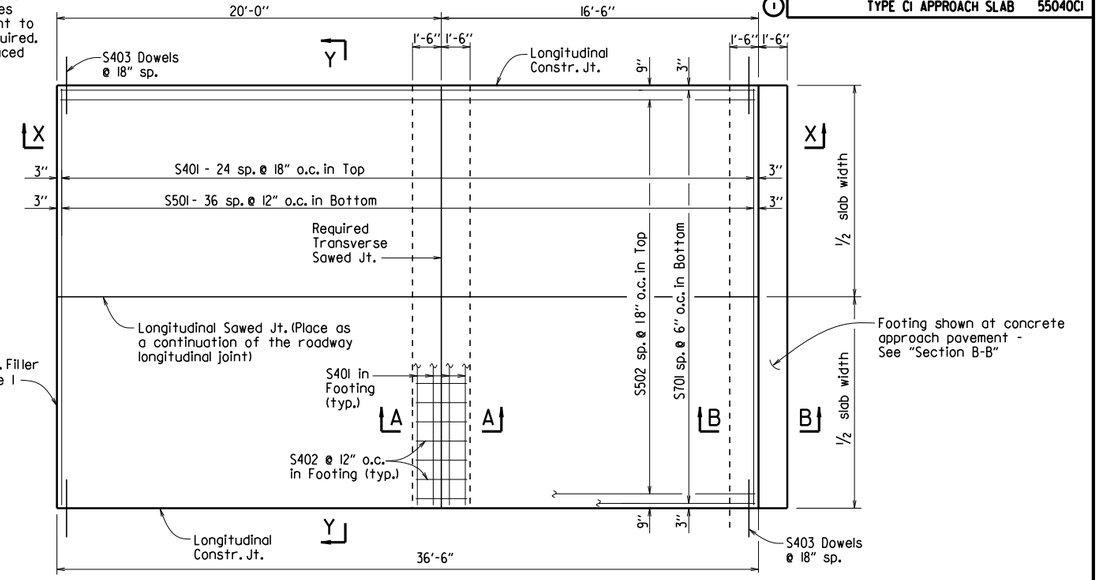

PLAN - SQUARE APPROACH SLAB

1/4" = 1'-0"

BAR LIST

(Square & Skewed Approach Slabs)

	Mark	Square No. Req'd.	Square Length	Skewed No. Req'd.	Skewed Length
15'-0" Slab Width	S401	33	14'-8"	37	14'-8"
	S402	30	2'-8"	45	2'-8"
	S403	50	3'-0"	*	3'-0"
	S501	37	14'-8"	37	14'-8"
	S502	10	36'-2"	—	—
	S502 - S511	—	—	1 Ea.	36.1' + 0.75'(tan skew angle) to 36.1' + 14.25'(tan skew angle)
	S5..	—	—	2 Ea.	14.7' - 0.75'/(tan skew angle) to 2'-0" Min.
	S701	30	36'-2"	—	—
	S701 - S730	—	—	1 Ea.	36.1' + 0.25'(tan skew angle) to 36.1' + 14.75'(tan skew angle)
24'-0" Slab Width	S401	33	23'-8"	37	23'-8"
	S402	48	2'-8"	72	2'-8"
	S403	50	3'-0"	*	3'-0"
	S501	37	23'-8"	37	23'-8"
	S502	16	36'-2"	—	—
	S502 - S517	—	—	1 Ea.	36.1' + 0.75'(tan skew angle) to 36.1' + 23.25'(tan skew angle)
	S5..	—	—	2 Ea.	23.7' - 0.75'/(tan skew angle) to 2'-0" Min.
	S701	48	36'-2"	—	—
	S701 - S748	—	—	1 Ea.	36.1' + 0.25'(tan skew angle) to 36.1' + 23.75'(tan skew angle)
36'-0" Slab Width	S401	33	35'-8"	37	35'-8"
	S402	72	2'-8"	108	2'-8"
	S403	50	3'-0"	*	3'-0"
	S501	37	35'-8"	37	35'-8"
	S502	24	36'-2"	—	—
	S502 - S525	—	—	1 Ea.	36.1' + 0.75'(tan skew angle) to 36.1' + 35.25'(tan skew angle)
	S5..	—	—	2 Ea.	35.7' - 0.75'/(tan skew angle) to 2'-0" Min.
	S701	72	36'-2"	—	—
	S701 - S772	—	—	1 Ea.	36.1' + 0.25'(tan skew angle) to 36.1' + 35.75'(tan skew angle)

* Varies with skew angle

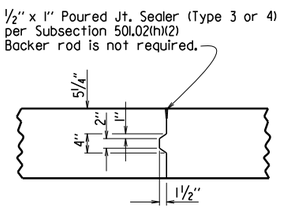

DETAILS OF LONGITUDINAL CONSTRUCTION JOINT

¾" = 1'-0"

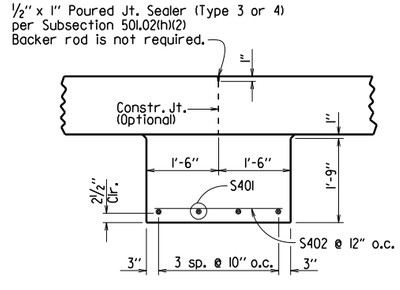

SECTION A-A

N.T.S.

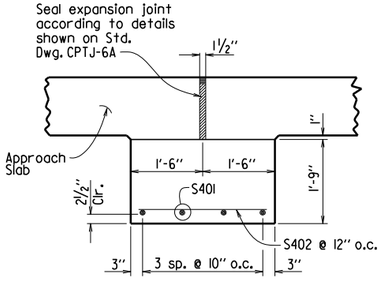

SECTION B-B

AT CONCRETE APPROACH PAVEMENT

N.T.S.

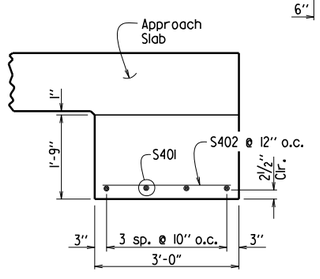

SECTION B-B

AT ASPHALT APPROACH PAVEMENT

N.T.S.

SECTION X-X

SQUARE APPROACH SLAB SHOWN

1/4" = 1'-0"

SECTION Y-Y

N.T.S.

TABLE OF QUANTITIES FOR ONE SQUARE APPROACH SLAB

(FOR INFORMATION ONLY)

Slab Width	Reinforcing Steel (Lbs.)	Concrete (Cu. Yds.)
15'-0"	3640	30.75
24'-0"	5775	49.15
36'-0"	8620	73.75

GENERAL NOTES

This drawing shall be used for Approach Slabs in Seismic Performance Zone 1 and for the maximum skew angles shown below:

15'-0" Slab Width: Maximum Skew Angle = 50°
24'-0" Slab Width: Maximum Skew Angle = 40°
36'-0" Slab Width: Maximum Skew Angle = 30°

All concrete shall be Class S (AE) with a minimum 28 day compressive strength f'c = 4,000 psi and shall be poured in the dry.

All reinforcing steel shall be Grade 60 (yield strength = 60,000 psi) conforming to AASHTO M 31 or M 322, Type A, with mill test reports.

Approach Slabs will be measured and paid for in accordance with Section 504.

STANDARD DETAILS FOR TYPE CI APPROACH SLAB

ARKANSAS STATE HIGHWAY COMMISSION

LITTLE ROCK, ARK.

DRAWN BY:	A.M.S.	DATE:	2/27/2014	FILENAME:	b55040ci.dgn
CHECKED BY:	K.W.Y.	DATE:	2/27/2014	SCALE:	AS SHOWN
DESIGNED BY:	STD.	DATE:			

DRAWING NO. 55040CI

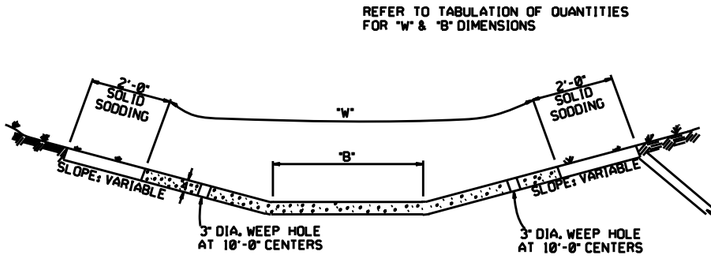

TYPE A

EXCAVATE TO NEAT LINES TO CONSTRUCT DITCH PAVING AND SOLID SODDING.

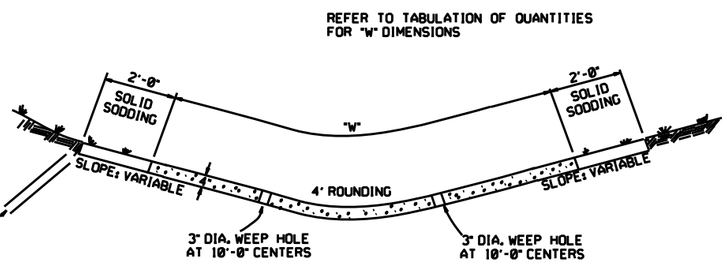

TYPE B

THE STEEL AND ADDITIONAL CONCRETE FOR THE WALLS SHALL NOT BE PAID FOR DIRECTLY, BUT SHALL BE CONSIDERED TO BE INCLUDED IN THE PRICE BID FOR "CONCRETE DITCH PAVING."

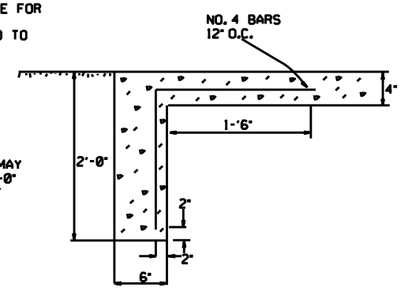

TOE WALL DEPTH MAY BE ALTERED TO 1'-0" WHEN DIRECTED BY THE ENGINEER IN ROCK EXCAVATION

TOE WALL DETAIL FOR CONCRETE DITCH PAVING

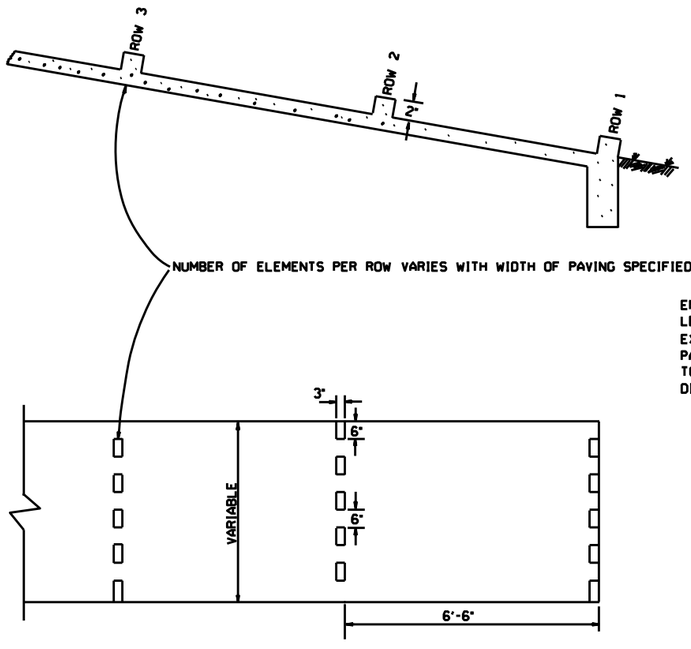

ENERGY DISSIPATORS
(NO SCALE)

ENERGY DISSIPATORS TO BE USED FOR THE ENTIRE LENGTH OF DITCH WHEN SLOPE OF DITCH PAVING EXCEEDS 7%. THE DISSIPATORS WILL NOT BE PAID FOR DIRECTLY, BUT SHALL BE CONSIDERED TO BE INCLUDED IN THE PRICE BID FOR CONCRETE DITCH PAVING.

GENERAL NOTES:

THE FULL WIDTH OF EACH SECTION SHALL BE POURED MONOLITHICALLY.

TOE WALLS TO BE CONSTRUCTED FULL WIDTH AT EACH END OF DITCH PAVING, AND POURED MONOLITHICALLY.

SOLID SOD ALONG DITCH PAVING TO BE PLACED WITHIN 14 DAYS OF DITCH PAVING CONSTRUCTION.

1" WIDE TRANSVERSE EXPANSION JOINTS SHALL BE PLACED IN CONCRETE DITCH PAVING AT 45' INTERVALS. THE SPACE SHALL BE FILLED WITH APPROVED JOINT FILLER COMPLYING WITH AASHTO M213.

DATE	REVISION	DATE FILM'D
12-8-16	CORRECTED ENERGY DISSIPATOR DRAWING AND NOTE	
11-17-10	ADDED GENERAL NOTE	
6-2-94	ADDED GENERAL NOTE ABOUT SOLID SODDING.	
11-30-8	ELIMINATED MIN. ROWS OF ELEMENTS	111-30-89
7-15-88	REVISED DISSIPATOR NOTE	653-7-15-88
4-3-87	REVISED ENERGY DISSIPATOR	671-4-3-87
1-9-87	MODIFIED NOTE ON ENERGY DISS.	532-1-9-87
11-3-86	ADDED NOTE TO ENERGY DISS.	599-12-1-86
11-1-84	ENERGY DISSIPATOR DETAILS ADDED	508-11-1-84
11-1-84	EXCAVATION DETAILS ADDED TYPES A & B	
10-2-72	REVISED AND REDRAWN	508-10-2-72

ARKANSAS STATE HIGHWAY COMMISSION

CONCRETE DITCH PAVING

STANDARD DRAWING CDP-1

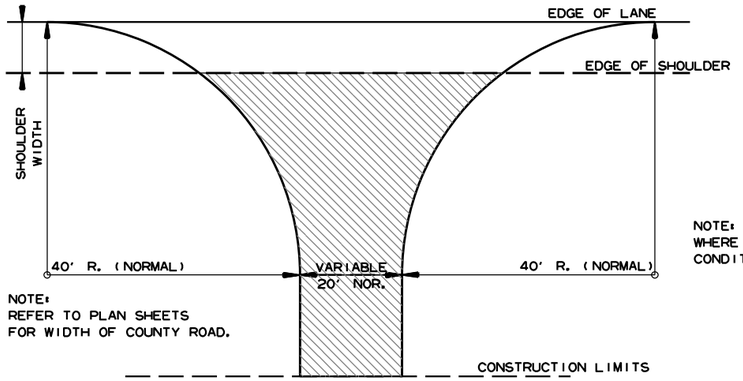

NOTE: TURNOUTS SHALL BE MODIFIED WHERE NECESSARY TO MEET LOCAL CONDITIONS AS DIRECTED BY THE ENGINEER.

ACHM SURFACE COURSE (1/2") (220 LBS. PER SQ. YD.) AND AGGREGATE BASE COURSE (CLASS 7) 7" COMP. DEPTH, UNLESS OTHERWISE SPECIFIED IN PLANS.

DETAIL FOR COUNTY ROAD TURNOUTS OPEN SHOULDER SECTION

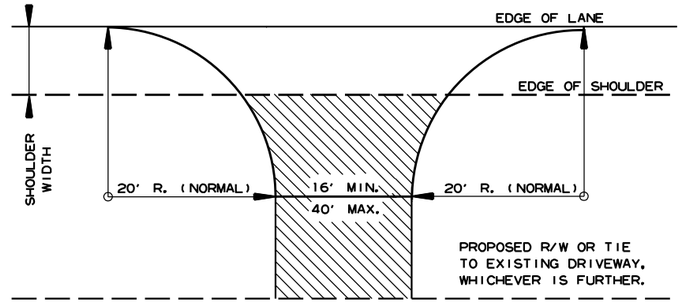

NOTE: TURNOUTS AND PRIVATE DRIVES SHALL BE MODIFIED WHERE NECESSARY TO MEET LOCAL CONDITIONS AS DIRECTED BY THE ENGINEER.

ACHM SURFACE COURSE (1/2") (220 LBS. PER SQ. YD.) AND AGGREGATE BASE COURSE (CLASS 7) 7" COMP. DEPTH IF ASPHALT OR GRAVEL DRIVE EXISTING, OR 6" CONCRETE IF CONCRETE DRIVE EXISTING.

DETAIL FOR DRIVEWAY TURNOUTS OPEN SHOULDER SECTION (ARTERIALS)

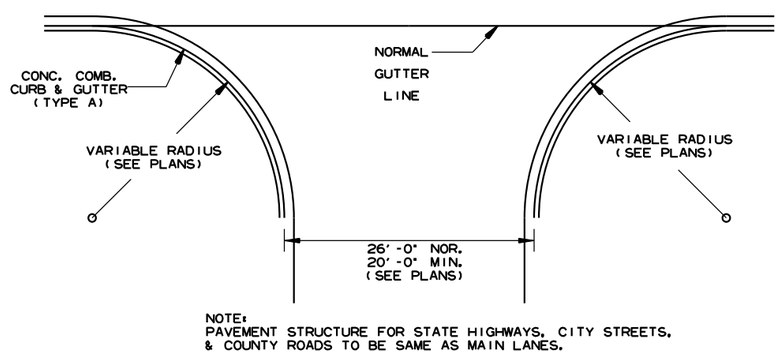

DETAIL OF TURNOUTS, ASPHALT STREETS, COUNTY ROADS & STATE HIGHWAYS CURB & GUTTER SECTION

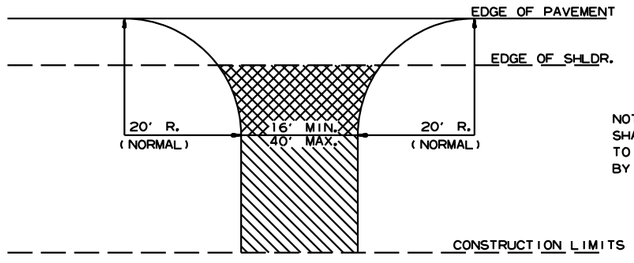

NOTE: TURNOUTS AND PRIVATE DRIVES SHALL BE MODIFIED WHERE NECESSARY TO MEET LOCAL CONDITIONS AS DIRECTED BY THE ENGINEER.

ASPHALT CONCRETE HOT MIX SURFACE COURSE (220 LBS. PER SQ. YD.) AGGREGATE BASE COURSE (CLASS 7) 7" COMP. DEPTH IF ASPHALT DRIVE EXIST OR 6" CONCRETE IF CONCRETE DRIVE EXIST.

AGGREGATE BASE COURSE (CLASS 7) 9" COMP. DEPTH OR CONFORM TO EXISTING DRIVEWAY

DETAIL FOR DRIVEWAY TURNOUTS (COLLECTORS)

5-19-22		ISSUED
DATE REV	DATE FILMED	DESCRIPTION

ARKANSAS STATE HIGHWAY COMMISSION

DETAILS OF DRIVEWAYS & STREET TURNOUTS

STANDARD DRAWING DR-2

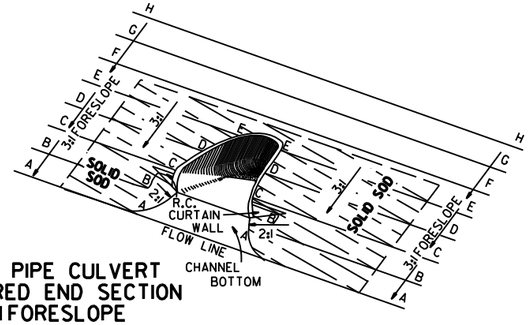

TYPICAL PIPE CULVERT
WITH FLARED END SECTION
& 3:1 FORESLOPE

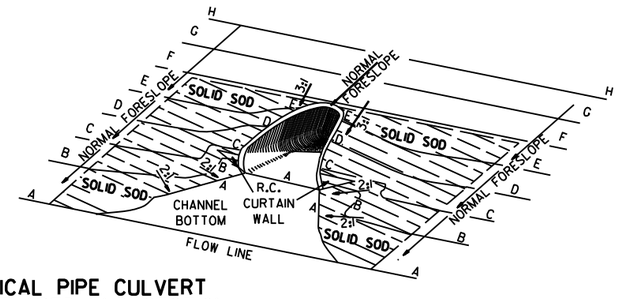

TYPICAL PIPE CULVERT
WITH FLARED END SECTION
& FLATTENED ADJACENT SLOPES

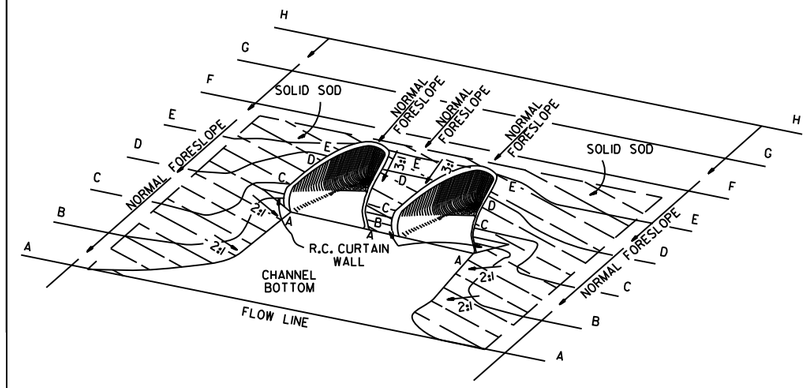

TYPICAL MULTIPLE PIPE CULVERT
WITH FLARED END SECTIONS
& FLATTENED ADJACENT SLOPES

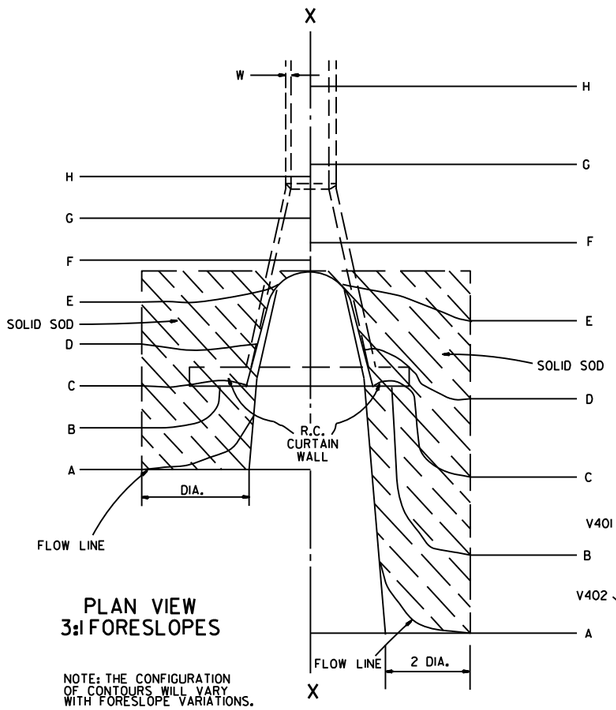

PLAN VIEW
3:1 FORESLOPES

NOTE: THE CONFIGURATION OF CONTOURS WILL VARY WITH FORESLOPE VARIATIONS.

PLAN VIEW
FLATTENED FORESLOPES

R.C. CURTAIN WALL
DIMENSIONS & QUANTITIES

PIPE DIA.	H_1	L_1	L	L (DBL.) / 2	SINGLE R.C.P.C.		DOUBLE R.C.P.C.	
					CONC.	REINF. STEEL	CONC.	REINF. STEEL
					CU. YDS.	LBS.	CU. YDS.	LBS.
18"	11½"	3'-5"	8'-0"	6'-3"	0.31	27.7	0.45	39.5
24"	1'-0½"	4'-6"	9'-6"	7'-6"	0.37	33.4	0.53	48.0
30"	1'-3½"	5'-7"	11'-0"	9'-0"	0.45	39.0	0.67	59.0
36"	1'-7"	6'-8"	13'-0"	10'-6"	0.58	52.6	0.83	73.9
42"	2'-1½"	7'-3"	15'-6"	12'-0"	0.82	77.1	1.10	100.7
48"	2'-5"	7'-10"	17'-0"	13'-0"	0.98	94.9	1.27	120.4
54"	2'-9½"	8'-5"	18'-6"	14'-0"	1.16	115.8	1.47	143.7
60"	3'-4"	9'-0"	20'-6"	15'-6"	1.47	149.7	1.84	180.3
72"	4'-5"	10'-2"	25'-6"	18'-6"	2.31	232.6	2.73	271.0

NOTE: QUANTITIES SHOWN ARE FOR ONE (1) CURTAIN WALL.

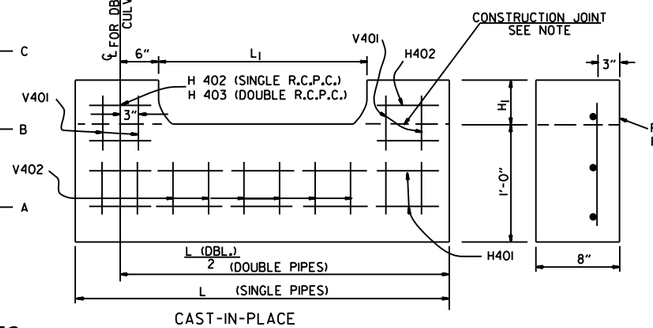

CAST-IN-PLACE

NOTE: THE PORTION OF THE R.C. CURTAIN WALL BENEATH THE FLARED END SECTION (LOWER 1'-0") SHALL BE PLACED MONOLITHICALLY. THE FLARED END SECTION SHALL THEN BE SET IN PLACE & THE REMAINING PORTIONS OF THE R.C. CURTAIN WALL PLACED.

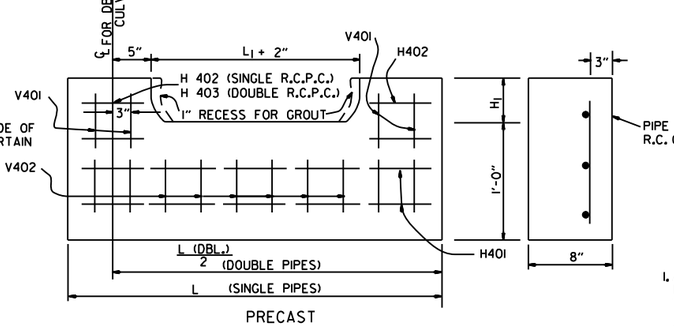

PRECAST

NOTE: THE PRECAST CURTAIN WALL WILL BE SET AND BACKFILLED WITH COMPACTED MATERIAL. THE FLARED END SECTION SHALL THEN BE SET IN PLACE AND THE 1" RECESS FILLED WITH GROUT. WHERE "L" EXCEEDS 11' THE CURTAIN WALL MAY BE CAST IN TWO (2) OR MORE SECTIONS. THE METHOD OF JOINING THE SECTIONS FOR INSTALLATION SHALL BE APPROVED BY THE ENGINEER.

R.C. CURTAIN WALL DETAILS

REINFORCING STEEL SCHEDULE

PIPE DIA.	SINGLE R.C. PIPE CULVERT								DOUBLE R.C. PIPE CULVERT									
	H401		H402		V401		V402		H401		H402		H403		V401		V402	
	L	NO.	L	NO.	L	NO.	L	NO.	L	NO.	L	NO.	L	NO.	L	NO.	L	NO.
18"	7'-8"	2	1'-11½"	4	1'-7½"	8	8"	8	12'-2"	2	1'-11½"	4	8"	2	1'-7½"	10	8"	14
24"	9'-2"	2	2'-2"	4	1'-8½"	10	8"	9	14'-8"	2	2'-2"	4	8"	2	1'-8½"	12	8"	18
30"	10'-8"	2	2'-4½"	4	1'-11½"	10	8"	12	17'-8"	2	2'-4½"	4	8"	2	1'-11½"	14	8"	22
36"	12'-8"	2	2'-10"	6	2'-3"	12	8"	14	20'-8"	2	2'-10"	6	8"	3	2'-3"	14	8"	28
42"	15'-2"	2	3'-9½"	8	2'-9½"	16	8"	15	23'-8"	2	3'-9½"	8	8"	4	2'-9½"	18	8"	30
48"	16'-8"	2	4'-3"	10	3'-1"	18	8"	16	25'-8"	2	4'-3"	10	8"	5	3'-1"	20	8"	32
54"	18'-2"	2	4'-8½"	12	3'-5½"	20	8"	17	27'-8"	2	4'-9"	12	8"	6	3'-5½"	22	8"	34
60"	20'-2"	2	5'-5"	14	4'-0"	24	8"	18	30'-8"	2	5'-5"	14	8"	7	4'-0"	26	8"	36
72"	25'-2"	2	7'-4"	18	5'-1"	30	8"	20	36'-8"	2	7'-4"	18	8"	9	5'-1"	33	8"	40

ALL REINFORCING STEEL #4 BARS @ 6" O.C.

SOLID SODDING

PIPE DIA.	SINGLE R.C.P.C.			DOUBLE R.C.P.C.		
	3:1	4:1	6:1	3:1	4:1	6:1
	SQ. YDS.			SQ. YDS.		
18"	5	7	12	6	8	13
24"	8	12	19	9	13	20
30"	13	18	29	14	19	30
36"	17	26	41	18	28	43
42"	23	35	55	25	37	57
48"	29	46	68	31	48	70
54"	36	57	85	37	59	87
60"	45	62	104	48	65	107
72"	64	92	156	67	95	159

NOTE: QUANTITIES SHOWN ABOVE ARE FOR ONE (1) END OF F.E.S.

GENERAL NOTES

1. A CAST-IN-PLACE OR PRECAST CURTAIN WALL MAY BE USED. PAYMENT FOR THE CURTAIN WALL SHALL BE CONSIDERED TO BE INCLUDED IN THE UNIT PRICE BID EACH FOR FLARED END SECTIONS OF THE SEVERAL SIZES, WHICH PRICE SHALL BE FULL COMPENSATION FOR FURNISHING ALL MATERIALS INCLUDING REINFORCING STEEL AND CONCRETE: FOR FORMS, MIXING AND PLACING; FOR EXCAVATION AND BACKFILL, AND FOR ALL LABOR, TOOLS, EQUIPMENT AND INCIDENTALS NECESSARY TO COMPLETE THE WORK.
2. ALL EXPOSED EDGES SHALL BE CHAMFERED ¾".
3. CONCRETE FOR CURTAIN WALL SHALL MEET THE REQUIREMENTS FOR CLASS A OR S CONCRETE AS PROVIDED IN SECTION 802 OF THE STANDARD SPECIFICATIONS OR FOR PAVING CONCRETE AS PROVIDED IN SECTION 501 OF THE STANDARD SPECIFICATIONS.
4. WELDED WIRE MESH 3 x 3 W10 x W10 MAY BE USED IN LIEU OF REINFORCING BARS.

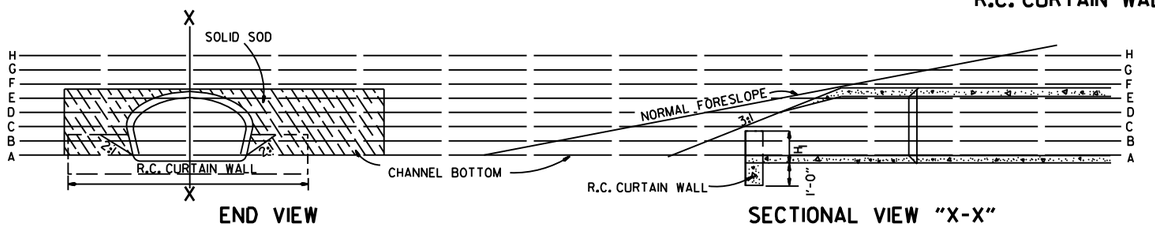

END VIEW

SECTIONAL VIEW "X-X"

DATE	REVISION	FILMED
10-18-96	ADDED NOTE TO SOLID SODDING	
10-12-95	CORRECTED SPELLING	
11-3-94	ADDED GENERAL NOTE NO. 4	
8-15-91	REV. CURTAIN WALL QUANT. STEEL SCH. & SOLID SOD QUANT.	
3-2-81	ALLOW PRECAST IN 2 OR MORE PIECES CHAMFER EDGES	
5-15-80	ADDED PRECAST WALL & GENERAL NOTES	
10-2-72	REVISED AND REDRAWN	

ARKANSAS STATE HIGHWAY COMMISSION

FLARED END SECTION

STANDARD DRAWING FES-1

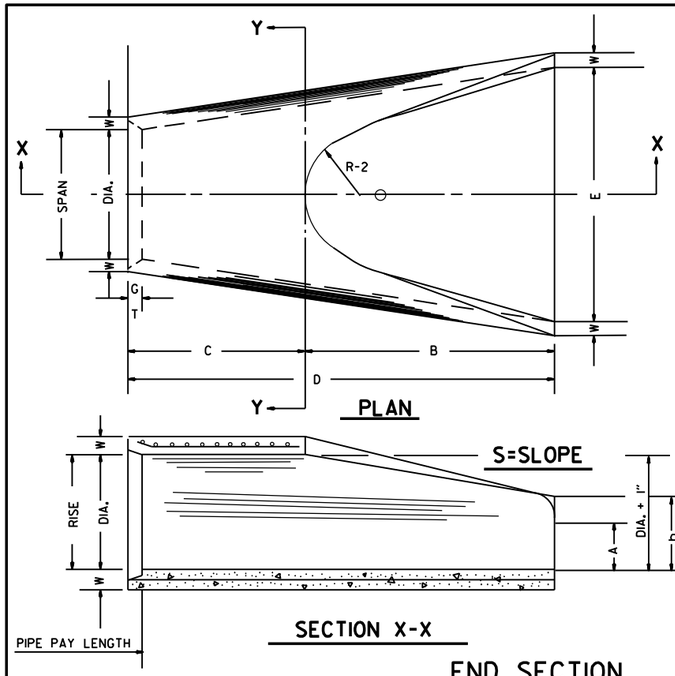

TABLE OF DIMENSIONS

DIA.	WALL	A	B	C	D	E	S	DIA. + I"	P	R-I	R-2	G-T	WT.	h
18"	2½"	9"	2'-3"	3'-10"	6'-1"	3'-0"	3:1	19"	29"	15½"	12"	2"	1000	1'-0½"
24"	3"	9½"	3'-7½"	2'-6"	6'-1½"	4'-0"	3:1	25"	33 3/16"	16 13/16"	14"	2½"	1600	1'-1½"
30"	3½"	1'-0"	4'-6"	1'-7¾"	6'-1¾"	5'-0"	3:1	31"	37"	18½"	15"	3¼"	1940	1'-4⅝"
36"	4"	1'-3"	5'-3"	2'-10¾"	8'-1¾"	6'-0"	3:1	37"	47 13/16"	24⅝"	20"	3½"	4100	1'-8"
42"	4½"	1'-9"	5'-3"	2'-11"	8'-2"	6'-6"	3:1	43"	53⅞"	27½"	22"	3½"	5380	2'-2½"
48"	5"	2'-0"	6'-0"	2'-2"	8'-2"	7'-0"	3:1	49"	56½"	28½"	22"	3½"	6550	2'-6"
54"	5½"	2'-4"	6'-6"	1'-10"	8'-4"	7'-6"	3:1	55"	65½"	33⅛"	24"	4"	8750	2'-10½"
60"	6"	2'-10"	6'-6"	1'-10"	8'-4"	8'-0"	3:1	61"	72½"	36 11/16"	24"	4"	9270	3'-5"
72"	7"	3'-10"	6'-6"	1'-10"	8'-4"	9'-0"	3:1	73"	77 13/16"	38 5/16"	24"	5"	13250	4'-6"

ARCH PIPE

EQUIV. DIA.	• SPAN AASHTO M 206	• SPAN AHD NOMINAL	• RISE AASHTO M 206	• RISE AHD NOMINAL	W	A	B	C	D	E	P	R2	G-T	S
	INCHES													
15	18	18	11	11	2"	4"	2'-0"	4'-0"	6'-0"	3'-0"	29"	12"	1½"	2½:1
18	22	22	13½	14	2½"	5"	2'-0"	4'-1"	6'-1"	3'-6"	32⅛"	13"	2½"	2½:1
21	26	26	15½	16	2¾"	7"	2'-3"	3'-10"	6'-1"	4'-0"	34⅛"	14"	2½"	2½:1
24	28½	29	18	18	3"	9"	2'-3"	3'-10"	6'-1"	5'-0"	36 11/16"	15"	2½"	2½:1
30	36¼	36	22½	23	3½"	10"	3'-1"	3'-0½"	6'-1½"	6'-0"	47 13/16"	20"	3"	2½:1
36	43¾	44	26⅝	27	4"	10½"	4'-0"	2'-1½"	6'-1½"	6'-6"	54⅝"	22"	3½"	2½:1
42	51⅛	51	31⅝	31	4½"	11½"	4'-7"	1-10¼"	6'-5¼"	7'-2"	59½"	23"	3¾"	2½:1
48	58½	59	36	36	5"	1'-3"	5'-3"	2'-10¾"	8'-1¾"	7'-10"	70 5/16"	24"	4¼"	2½:1
54	65	65	40	40	5½"	1'-7"	5'-3"	2'-11"	8'-2"	8'-6"	72 1/16"	24"	4¾"	2¼:1
60	73	73	45	45	6"	1'-10"	5'-6"	2'-8"	8'-2"	9'-0"	77⅝"	24"	5"	2¼:1

• THE MEASURED SPAN AND RISE SHALL NOT VARY MORE THAN ± 2 PER CENT FROM THE VALUES SPECIFIED BY AASHTO M 206.

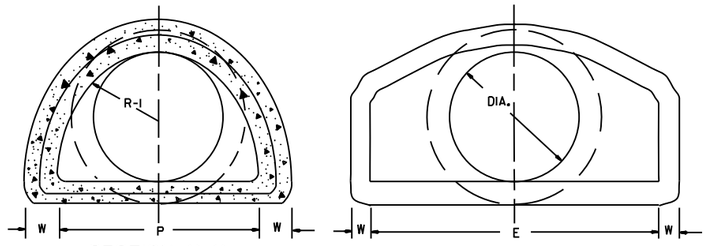

NOTE: TONGUE END ON UPSTREAM SECTION
GROOVE END ON DOWNSTREAM SECTION

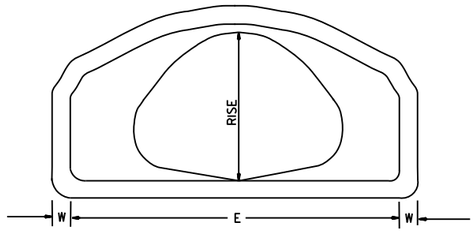

END VIEW
CONCRETE ARCH PIPE

END SECTION FOR REINFORCED CONCRETE PIPE CULVERTS

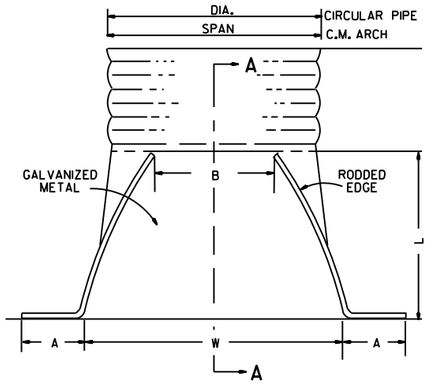

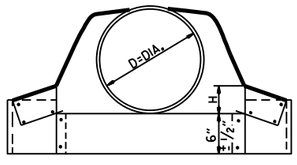

CIRCULAR PIPE

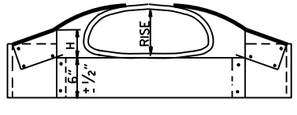

C.M. ARCH PIPE

CIRCULAR PIPE

D. DIA.	GAUGE	A 1" ±	B. MAX.	H 1" ±	L 1½" ±	W 2" ±	S
		INCHES					
12	16	6	6	6	21	24	2½:1
15	16	7	8	6	26	30	2½:1
18	16	8	10	6	31	36	2½:1
21	16	9	12	6	36	42	2½:1
24	16	10	13	6	41	48	2½:1
30	14	12	16	8	51	60	2½:1
36	14	14	19	9	60	72	2½:1
42	12	16	22	11	69	84	2½:1
48	12	18	27	12	78	90	2½:1
54	12	18	30	12	84	102	2:1
60	12	18	33	12	87	114	1¾:1
66	12	18	36	12	87	120	1½:1
72	12	18	39	12	87	126	1 1/3:1

C.M. ARCH PIPE

EQUIV. DIA.	SPAN	RISE	A 1" ±	B MAX.	H 1" ±	L 1½" ±	W 2" ±	S	GAUGE
	INCHES								
15"	17	13	7	9	6	19	30	2½:1	16
18"	21	15	7	10	6	23	36	2½:1	16
21"	24	18	8	12	6	28	42	2½:1	16
24"	28	20	9	14	6	32	48	2½:1	16
30"	35	24	10	16	6	39	60	2½:1	14
36"	42	29	12	18	8	46	75	2½:1	14
42"	49	33	13	21	9	53	85	2½:1	12
48"	57	38	18	26	12	63	90	2½:1	12
54"	64	43	18	30	12	70	102	2¼:1	12
60"	71	47	18	33	12	77	114	2¼:1	12

NOTE: ALTERNATE CONNECTIONS TO THE PIPE CULVERTS, IN ACCORDANCE WITH MANUFACTURER'S STANDARD PRACTICES, MAY BE MADE SUBJECT TO THE APPROVAL OF THE ENGINEER.

END SECTIONS FOR CORRUGATED METAL PIPE CULVERTS

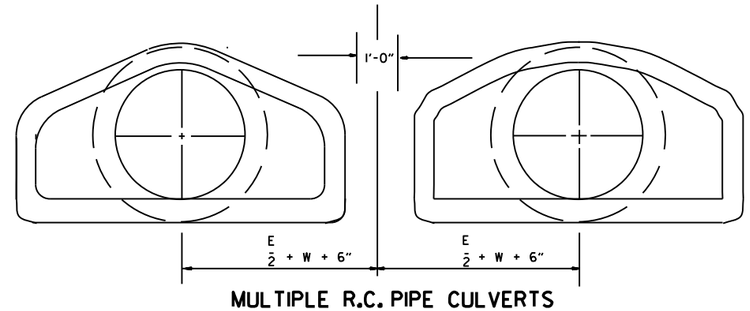

MULTIPLE R.C. PIPE CULVERTS

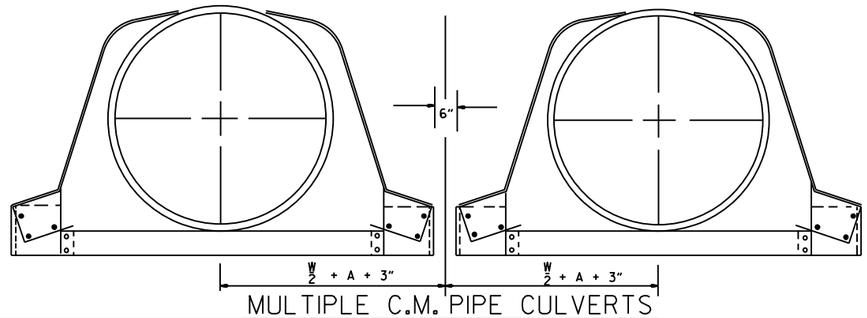

MULTIPLE C.M. PIPE CULVERTS

DATE	REVISION	FILMED
10-18-96	REVISED ASTM REF. TO AASHTO	
5-15-80	REVISED DISTANCE BETWEEN MULTIPLE R.C.P. F.E.S.	664-5-15-80
7-14-78	C.M. ARCH SIZES TO CONFORM WITH AASHTO SIZES	752-7-14-78
8-22-75	ADDED MULTIPLE PIPE CULVERTS	517-8-22-75
12-5-74	REMOVED NOTE RE REINF. FOR R.C. F.E.S.	500-12-5-74
5-24-73	CMP END SECTION, SHOW PIPE PAY LENGTH	627-5-24-73
10-2-72	REVISED AND REDRAWN	760-10-2-72

ARKANSAS STATE HIGHWAY COMMISSION

FLARED END SECTION

STANDARD DRAWING FES-2

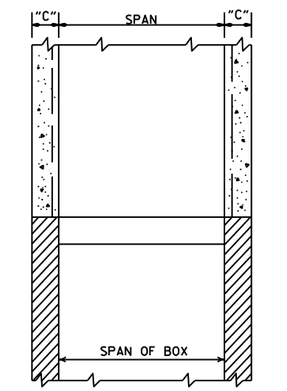

SECTION B-B

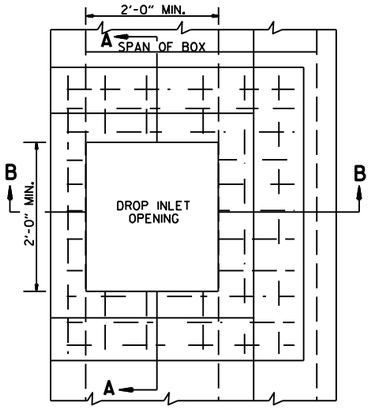

PLAN

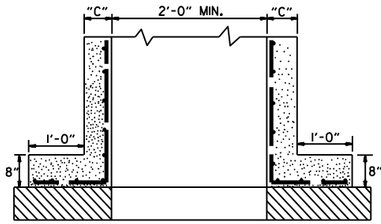

SECTION A-A

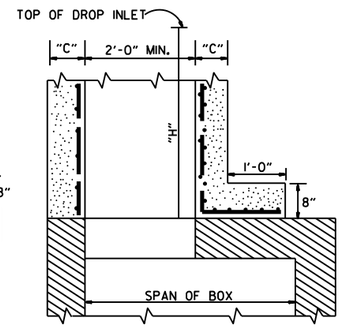

SECTION B-B

METHOD OF CONSTRUCTING DROP INLET ON EXISTING R.C. BOX CULVERT

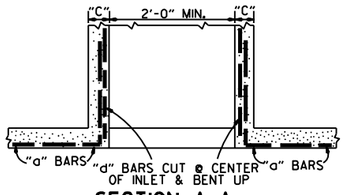

SECTION A-A

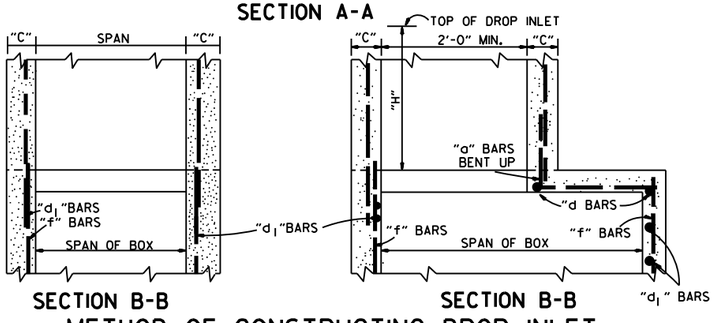

SECTION B-B SECTION B-B

METHOD OF CONSTRUCTING DROP INLET ON NEW R.C. BOX CULVERT

NOTE: "C" DIMENSIONS AND REINFORCING BAR SIZES, SHALL CONFORM TO THOSE SHOWN ON STANDARD DRAWING FOR DROP INLET.

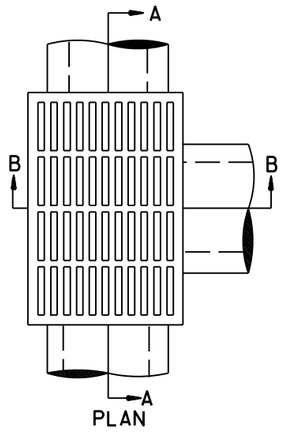

PLAN

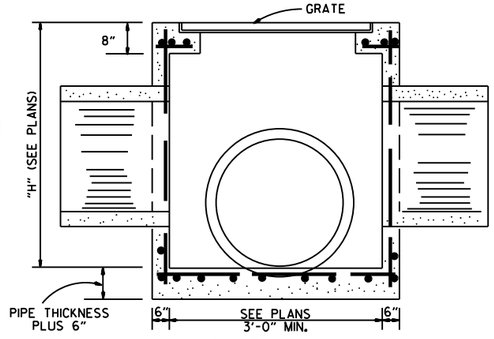

SECTION A-A

NOTE: REINF. BARS TO BE #4 BARS ON 6" CTRS. WITH 1½" MIN. COVER. THIS TYPE DROP INLET TO BE USED WHERE NOT SUBJECTED TO TRAFFIC.

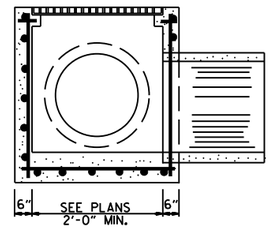

SECTION B-B

DROP INLET (TYPE E)

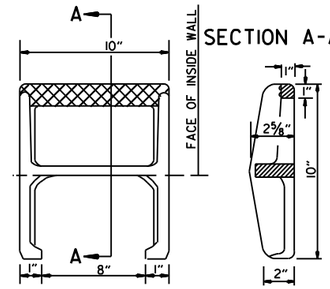

APPROX. WEIGHT = 11 LBS. (CAST IRON)

PLAN

NOTE: THIS DETAIL IS TYPICAL. OTHERS MAY BE USED WITH PRIOR APPROVAL OF THE ENGINEER.

DETAIL OF STEP FOR DROP INLET

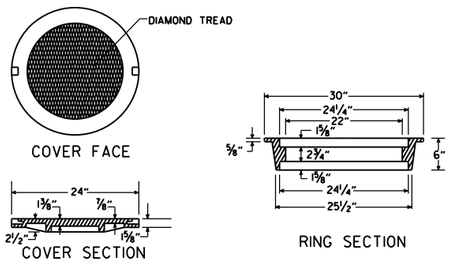

APPROXIMATE TOTAL WEIGHT = 333 LBS.

HEAVY DUTY RING & COVER

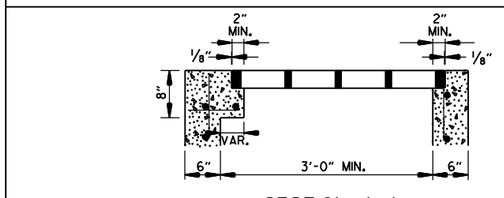

SECTION A-A

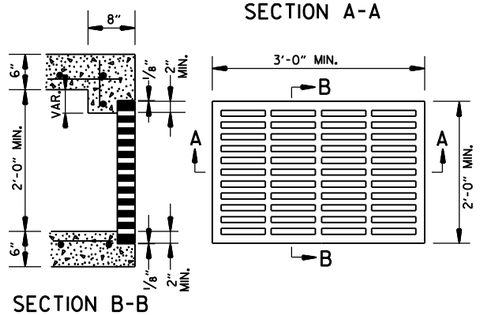

SECTION B-B

APPROXIMATE MINIMUM WATERWAY OPENING = 260 SQ. IN.

GRATE FOR TYPE E DROP INLET

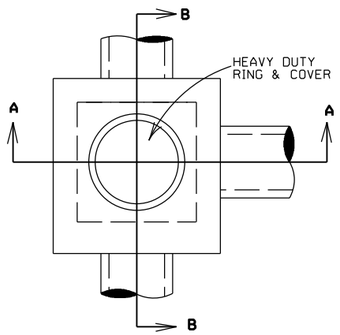

PLAN

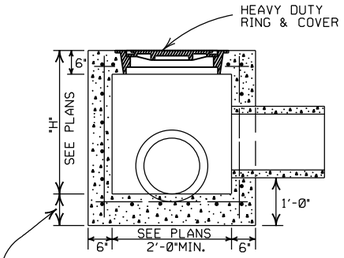

SECTION A-A

NOTE: REINF. BARS TO BE #4 BARS ON 6" CTRS. WITH 1½" MIN. COVER. THIS TYPE JUNCTION BOX TO BE USED WHERE NOT SUBJECTED TO TRAFFIC.

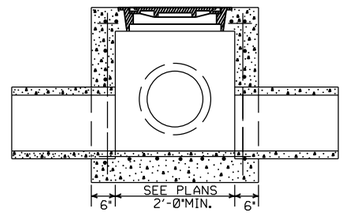

SECTION B-B

JUNCTION BOX (TYPE E)

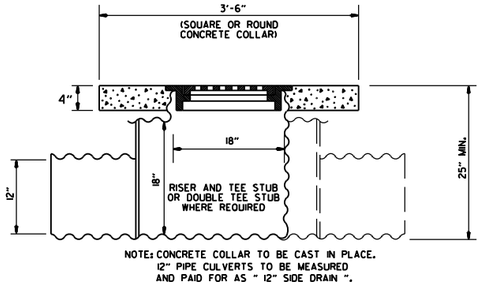

NOTE: CONCRETE COLLAR TO BE CAST IN PLACE. 12" PIPE CULVERTS TO BE MEASURED AND PAID FOR AS " 12" SIDE DRAIN ".

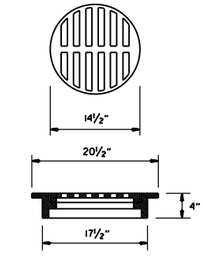

USE NEENAH R-5901-C OR EQUIVALENT BICYCLE SAFE FRAME AND GRATE

DETAIL OF YARD DRAIN

GENERAL NOTES:

1. ALL EXPOSED CORNERS SHALL BE ¾" CHAMFERED.
2. STEPS SHALL BE INSTALLED ON 16" CENTERS ON ALL INLETS 4'-0" HIGH OR OVER, OR AS APPROVED BY THE ENGINEER.
3. EXPANSION JOINT MATERIAL SHALL BE ¾" PREFORMED FIBER.
4. GRATE OR GRATE AND FRAME SHALL BE CONSTRUCTED OF CAST IRON AND SHALL CONFORM TO THE REQUIREMENTS OF THE STANDARD SPECIFICATIONS FOR GRAY IRON CASTINGS AASHTO M 105 CLASS 35B. GRATE MAY BE USED WITHOUT FRAME.
5. GRATE AND FRAME SHALL NOT BE PAINTED.
6. GRATE SHALL BE BICYCLE SAFE.
7. HEAVY DUTY RING SHALL ALWAYS BE INSTALLED WITH FLANGE ON TOP.
8. HEAVY DUTY RING AND COVER SHALL BE CONSTRUCTED OF CAST IRON AND SHALL CONFORM TO THE REQUIREMENTS OF THE STANDARD SPECIFICATIONS FOR GRAY IRON CASTINGS AASHTO M105 CLASS 35B & AASHTO M306.
9. HEAVY DUTY RING AND COVER SHALL NOT BE PAINTED.
10. DIMENSIONS SHOWN FOR RING AND COVER ARE TYPICAL. THE CONTRACTOR MAY SUBSTITUTE SIMILAR CASTINGS WITH THE APPROVAL OF THE ENGINEER. REQUESTING APPROVAL FOR CASTING DESIGNS MAY BE MADE BY REFERRING TO PREVIOUSLY APPROVED DRAWINGS.

DATE REV.	REVISION	DATE FILMED
11-16-01	ADDED NOTE 10	
1-12-00	REVISED HEAVY DUTY RING & COVER	
7-02-98	CHANGED GRATE DETAIL, DELETED DI(TYPE D), REPLACED RING & COVER W/HEAVY DUTY RING & COVER, ADDED JUNCTION BOX (TYPE E)	
6-26-97	ADDED DIMENSION TO TYPE IV-A	
10-18-96	ADDED DETAIL OF YARD DRAIN	
8-15-91	DELETE TYPE IV GRATE	
7-15-88	REVISED STEP DETAIL	
5-20-83	REVISED DETAILS OF GRATES (TYPE IV & IV-A)	
2-4-83	ADDED GENERAL NOTE NO. 4	
3-2-81	ADDED TYPE IV-A GRATE	
5-22-74	DELETED INLET (TYPE F) & GRATE (TYPE III)	
10-2-72	REVISED AND REDRAWN	

ARKANSAS STATE HIGHWAY COMMISSION

DETAILS OF DROP INLETS & JUNCTION BOXES

STANDARD DRAWING FPC-9

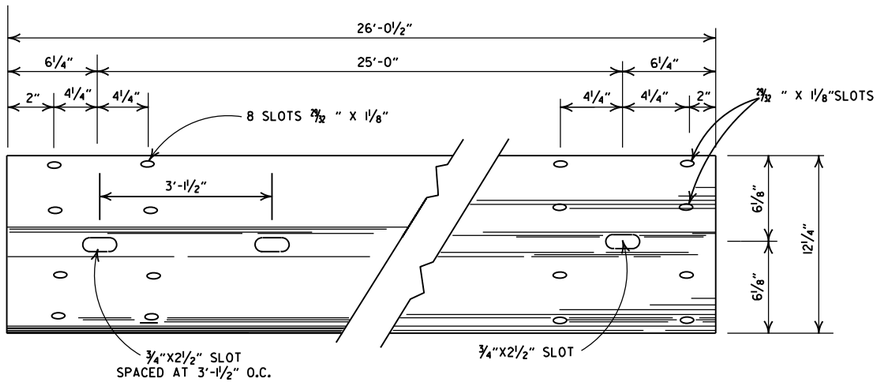

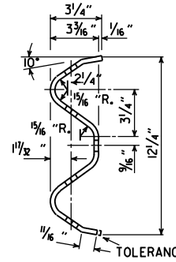

DETAILS OF W-BEAM GUARDRAIL

RAIL SECTION OF CLOSELY SIMILAR DIMENSIONS AND COMPARABLE STRENGTH MAY BE SUBSTITUTED IF APPROVED BY THE ENGINEER.

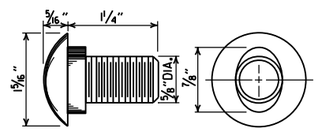

SPLICE BOLT
POST BOLT - SAME EXCEPT LENGTH

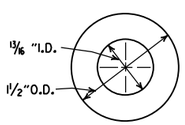

CUT STEEL WASHER

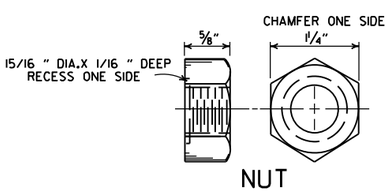

NUT

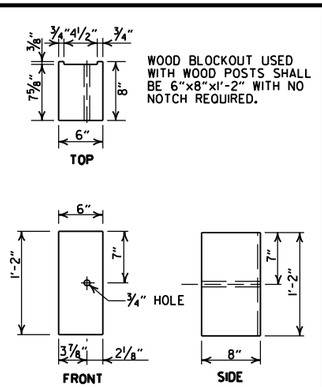

WOOD BLOCKOUT USED WITH WOOD POSTS SHALL BE 6"x8"x1'-2" WITH NO NOTCH REQUIRED.

WOOD BLOCKOUT (W-BEAM)

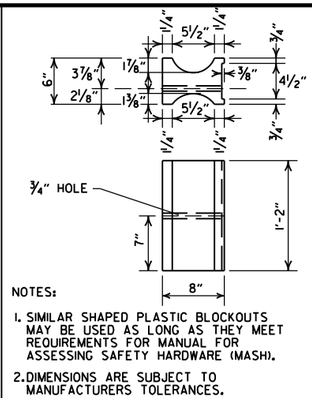

NOTES:

1. SIMILAR SHAPED PLASTIC BLOCKOUTS MAY BE USED AS LONG AS THEY MEET REQUIREMENTS FOR MANUAL FOR ASSESSING SAFETY HARDWARE (MASH).
2. DIMENSIONS ARE SUBJECT TO MANUFACTURERS TOLERANCES.

PLASTIC BLOCKOUT (W-BEAM)

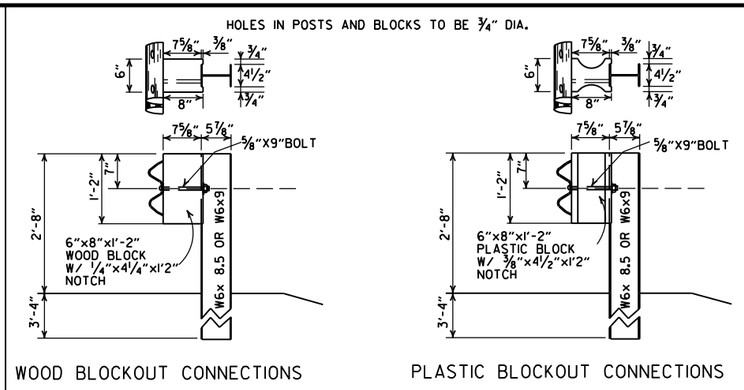

WOOD BLOCKOUT CONNECTIONS

PLASTIC BLOCKOUT CONNECTIONS

DETAILS OF STEEL LINE POST CONNECTIONS (W-BEAM)

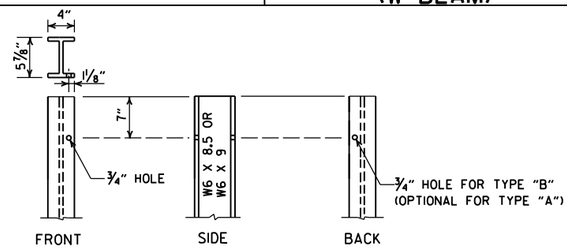

STEEL POST

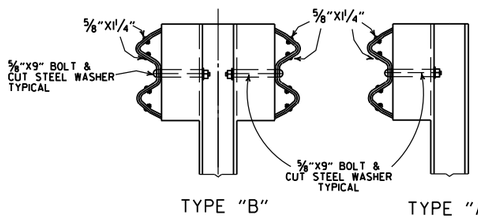

TYPE "B" TYPE "A"

DETAILS OF STEEL LINE POST CONNECTIONS (W-BEAM)

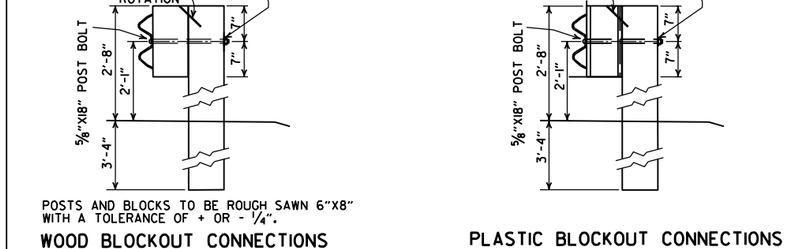

POSTS AND BLOCKS TO BE ROUGH SAWN 6"X8" WITH A TOLERANCE OF + OR - ¼".

WOOD BLOCKOUT CONNECTIONS

PLASTIC BLOCKOUT CONNECTIONS

DETAILS OF WOOD LINE POST CONNECTIONS (W-BEAM)

-GENERAL NOTES-

ALL BOLTS SHALL BE SUFFICIENT LENGTH TO EXTEND THROUGH THE FULL THICKNESS OF THE NUT AND NO MORE THAN ¾" BEYOND IT.

WHERE W-BEAM GUARDRAIL CONTINUES, THE INTERMEDIATE SECTIONS SHALL HAVE A POST SPACING OF 6'-3" UNLESS OTHERWISE NOTED.

W-BEAM GUARDRAIL REPRESENTING INTERMEDIATE SECTIONS WILL BE MEASURED ALONG THE ROADWAY FACE FROM CENTERLINE OF POST TO CENTERLINE OF POST.

USE W-BEAM GUARDRAIL COMPONENTS OF SAME MATERIAL FOR ENTIRE JOB. FOR EXTENSIONS OR MODIFICATION OF EXISTING GUARDRAIL, W-BEAM GUARDRAIL COMPONENTS OF THE SAME TYPE AS THOSE EXISTING SHALL BE USED.

ANY BACKFILLING UNDER OR AROUND POST SHALL BE DAMP SAND THOROUGHLY TAMPED IN PLACE.

WOOD POSTS & WOOD BLOCKS SHALL BE EITHER DENSE NO. 1 STRUCTURAL OR BETTER 9.7f (1400 f) OR NO. 1 1350 f SOUTHERN PINE.

CONTRACTOR SHALL HAVE THE OPTION OF USING WOOD BLOCKOUTS FOR W-BEAM GUARDRAIL OR PLASTIC BLOCKOUTS, AS LONG AS BLOCKOUT USED MEETS REQUIREMENTS FOR MANUAL FOR ASSESSING SAFETY HARDWARE (MASH) FOR W-BEAM GUARDRAIL.

DATE	REVISION	FILMED
11-07-19	RENUMBERED AND RENAMED	
11-16-17	REVISED GENERAL NOTES AND RAISED GUARDRAIL HEIGHT 3"	
07-14-10	RAISED HEIGHT OF GUARDRAIL 1"	
10-15-09	ADDED REFERENCE TO MASH	
04-10-03	REVISED GENERAL NOTES	
08-22-02	REVISED DIMENSION ON WOOD & PLASTIC BLOCKOUT CONNECTIONS & STEEL POST	
11-16-01	REVISED WOOD BLOCKOUT & DETAILS OF WOOD LINE POST CONNECTIONS	
03-30-00	REMOVED GUARDRAIL AT BRIDGE ENDS	
01-12-00	ADDED PLASTIC BLOCKOUT	
08-12-98	REV. BLOCKOUTS TO WOOD, DELETED CONC. POST & REV. GENERAL NOTE, DELETED DET. OF GUARDRAIL REPLACE. BEHIND CURB & DET. OF POST PLACE. IN SOLID ROCK, & ADDED DETAILS OF STEEL LINE POST CONN. REMOVED BACK-UP PLATE. REVISED HOLES IN STEEL POLES	
04-03-97	REMOVED "LAP IN DIRECTION OF TRAFFIC" NOTE & PLACED ARROWS ON WASHERS	
10-18-96	REVISED WOOD POST NOTE	
06-02-94	ADDED ALT. STEEL POST SIZE	
08-05-93	REVISED STEEL POST SIZE	8-5-93
10-01-92	REDRAWN & REVISED	10-1-92
08-15-91	REVISED WASHER NOTE	8-15-91
08-02-90	REV. GEN. NOTE & DEPTH OF ANC. POST IN ROCK	8-2-90
07-15-88	REVISED SECTION 3 & GENERAL NOTES	
03-04-88	REV. ANCHOR POST ,ELEV. NOTES & POST IN ROCK	780-3-4-88
10-30-87	REVISED WOOD LINE POST DETAIL	546-10-30-87
10-09-87	REDRAWN & REVISED	802-10-9-87

ARKANSAS STATE HIGHWAY COMMISSION

GUARDRAIL DETAILS

STANDARD DRAWING GR-6

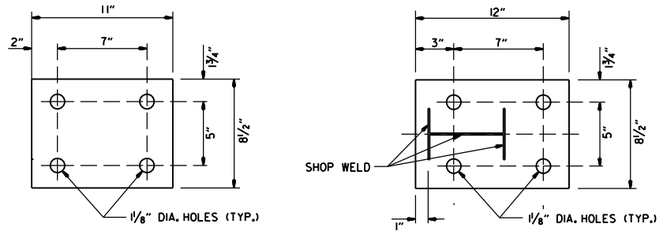

WASHER PLATE

BASE PLATE

Note: Bolts, nuts, washers and plates shall be galvanized in accordance with Section 807 of the Standard Specifications.

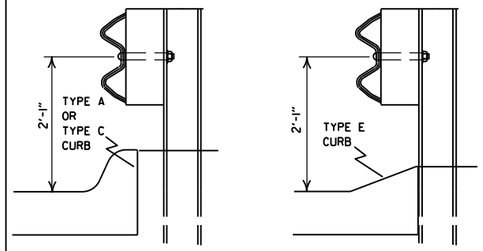

DETAIL OF GUARDRAIL PLACEMENT BEHIND CURB (W-BEAM)

FOR DESIGN SPEEDS OF 50 MPH OR LESS ALL CURB FACES, AS SHOWN ON STD. DRWG. CG-1, MAY BE USED. FOR DESIGN SPEEDS OF 55 MPH OR MORE TYPE "E" CURB FACE SHALL BE USED.

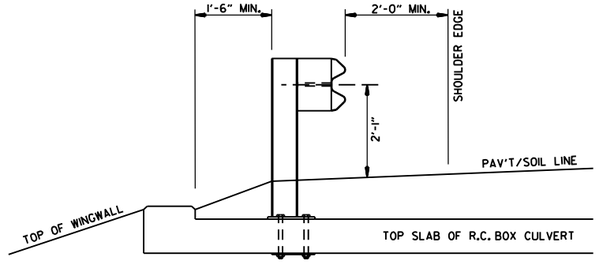

SECTION A-A

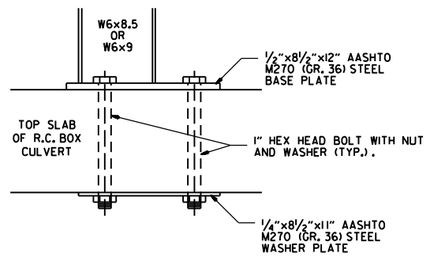

DETAIL OF CONNECTION

Case 1

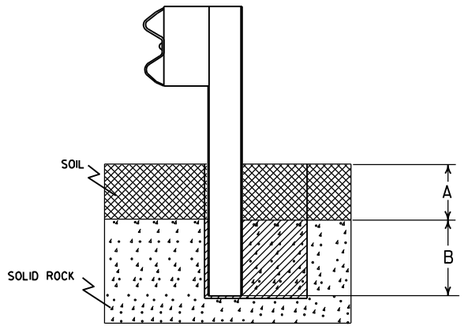

Case 2

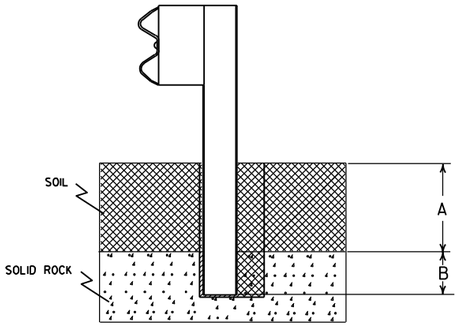

Plan View Steel Posts
Either hole configuration acceptable

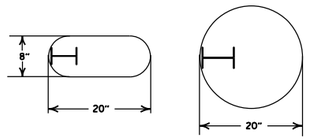

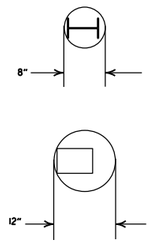

Plan View Wood Posts
Either hole configuration acceptable

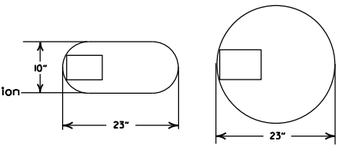

Notes: For overlying soil depths (A) ranging from 0 to 18", the depth of required drilling (B) is equal to 24".

Zone A:
Backfill according to Section 617.03(a).

Zone B:
Backfill hole in 6" lifts with material meeting the requirements of Section 802.02(c) - Alternate gradation. Compact to 95% maximum dry density per ASTM D-698.

Notes: For overlying soil depths (A) ranging from 18" to 44", the depth of required drilling (B) is equal to either 12" or 44" minus the depth of soil whichever is less.

Zone A & B:
Backfill according to Section 617.03(a).

DETAIL OF POST PLACEMENT IN SOLID ROCK (W-BEAM)

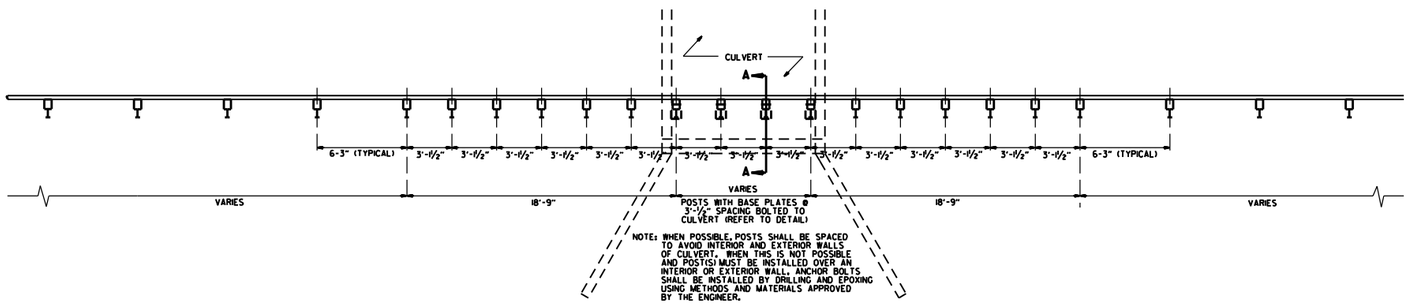

PLAN LAYOUT OF TYPE A GUARDRAIL AT LOW-FILL CULVERTS

NOTE: THIS DETAIL IS TO BE USED ONLY WHEN THE COVER OVER THE CULVERT DOES NOT PERMIT FULL EMBEDMENT OF GUARDRAIL POSTS AS SHOWN ON STD. DWG. GR-6.

DATE	REVISION	FILMED
11-07-19	RENUMBERED, RENAMED, REVISED REFERENCE	
11-16-17	REVISED GUARDRAIL HEIGHT	
07-14-10	RAISED HEIGHT OF GUARDRAIL 1"	
04-12-07	REVISED DETAIL OF GUARDRAIL PLACEMENT BEHIND CURB	
11-10-05	ADDED GUARDRAIL PLACEMENT BEHIND CURB; REVISED DETAIL OF CONNECTION	
11-18-04	REVISED POST PLACEMENT IN ROCK & CULVERT CONNECTION DETAILS. ADDED DETAIL FOR GUARDRAIL PLACEMENT AT LOW-FILL CULVERTS	
03-30-00	REMOVED CONCRETE INSERT ANCHOR	
08-12-98	CHANGED STEEL SPACER BLOCK TO WOOD BLOCKOUT, ADDED DET. OF GUARDRAIL CONNECTION TO R.C. BOX CULV'T., DELETED DET. OF STEEL LINE POST CONN. & ADDED DET. OF GUARDRAIL PLACE. BEHIND CURB & DET. OF POSTPLACE. IN SOLID ROCK	
04-03-96	PLACED ARROWS AT CUT STEEL WASHERS	4-3-96
10-18-96	REV. ASTM REF. TO AASHTO	
11-22-95	ADDED OPTIONAL HOLES	
06-02-94	REVISED ALTERNATE POST SIZE	
08-05-93	REVISED STEEL POST SIZE	
10-01-92	REDRAWN & REVISED	10-1-92
08-02-90	DEL. WASHER ON ANCHOR ASSEMBLY	8-2-90
07-15-88	CONFORMED TO 1988 SPECS	
03-04-88	REVISED ANCHOR NOTE	
10-30-87	REVISED ANCHOR ASSEMBLY	712-10-30-87
10-30-87	REVISED PLACEMENT BEHIND CURB	547-10-30-87
10-09-87	REDRAWN & REVISED	803-10-9-87

ARKANSAS STATE HIGHWAY COMMISSION

GUARDRAIL DETAILS

STANDARD DRAWING GR-7

NOTE: GUARDRAIL WITH GUARDRAIL TERMINAL (TYPE I) TO BE INSTALLED ONLY AT LOCATIONS SHOWN ON PLANS.

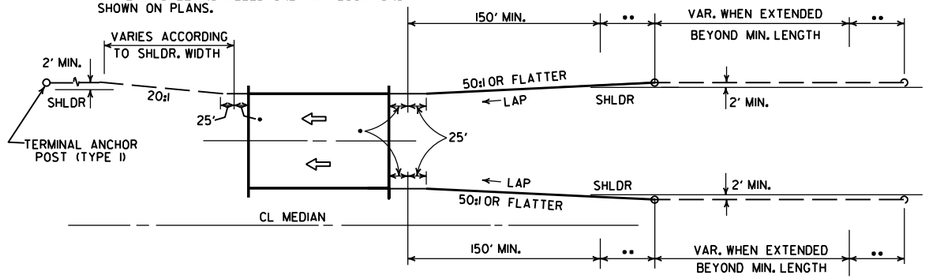

ONE-WAY TRAFFIC

••• LAP OF GUARDRAIL SHALL BE AS SHOWN FOR A DISTANCE OF UP TO 200', CHANGE TO LAP IN DIRECTION OF TRAVEL.

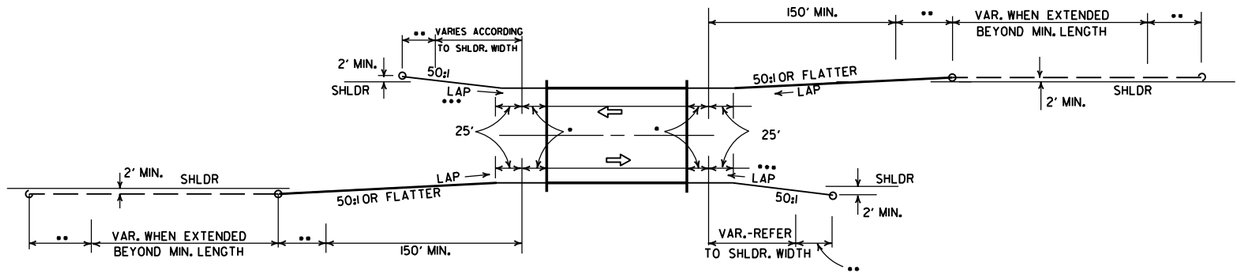

TWO-WAY TRAFFIC

METHODS OF INSTALLATION OF GUARDRAIL AT LESS THAN FULL SHOULDER WIDTH BRIDGES USING GUARDRAIL TERMINAL (TYPE 2)

••• LAP OF GUARDRAIL SHALL BE AS SHOWN FOR A DISTANCE OF UP TO 200', CHANGE TO LAP IN DIRECTION OF TRAVEL.

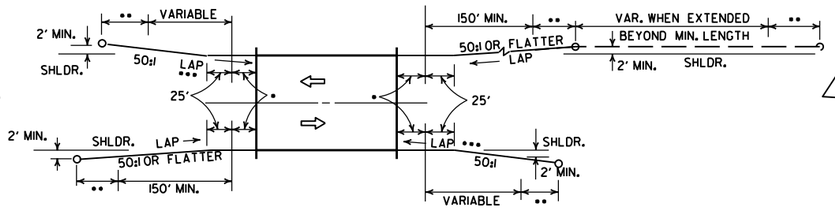

TWO-WAY TRAFFIC

NOTE: GUARDRAIL WITH GUARDRAIL TERMINAL (TYPE I) TO BE INSTALLED ONLY AT LOCATIONS SHOWN ON PLANS.

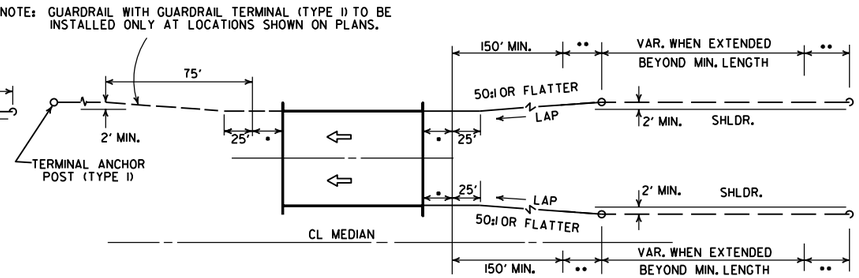

ONE-WAY TRAFFIC

METHOD OF INSTALLATION OF GUARDRAIL AT FULL SHOULDER WIDTH BRIDGES USING GUARDRAIL TERMINAL (TYPE 2)

••• LAP OF GUARDRAIL SHALL BE AS SHOWN FOR A DISTANCE OF UP TO 200', CHANGE TO LAP IN DIRECTION OF TRAVEL.

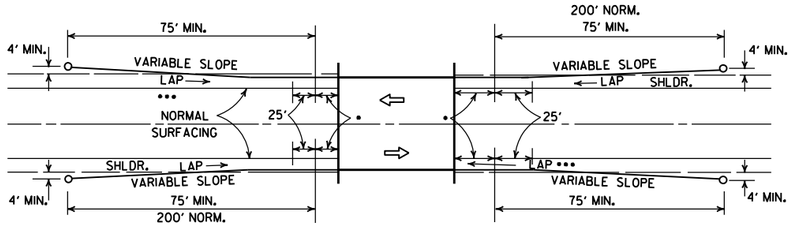

METHOD OF INSTALLATION OF GUARDRAIL USING GUARDRAIL TERMINAL (TYPE I) (FULL SHOULDER WIDTH OR LESS BRIDGES)

LEGEND

- • THRIE BEAM GUARDRAIL TERMINAL
- •• GUARDRAIL TERMINAL (TYPE 2)

DATE	REVISION	DATE FILM
11-07-19	RENUMBERED AND RENAMED	
4-17-08	REVISED LAYOUTS	
11-10-05	REMOVED GUARDRAIL NOTES AND DETAILS	
11-16-01	DELETED NOTE-METHOD OF INSTALLATION OF GUARDRAIL USING GUARDRAIL TERM. (TY. I)	
1-12-00	ADDED CONSTRUCTION NOTE	1-12-00
6-26-97	REVISED LAYOUT	
10-1-92	REDRAWN & REVISED	10-1-92
	ADDED NOTE	
10-9-87	REDRAWN & REVISED	

ARKANSAS STATE HIGHWAY COMMISSION

GUARDRAIL DETAILS

STANDARD DRAWING GR-8

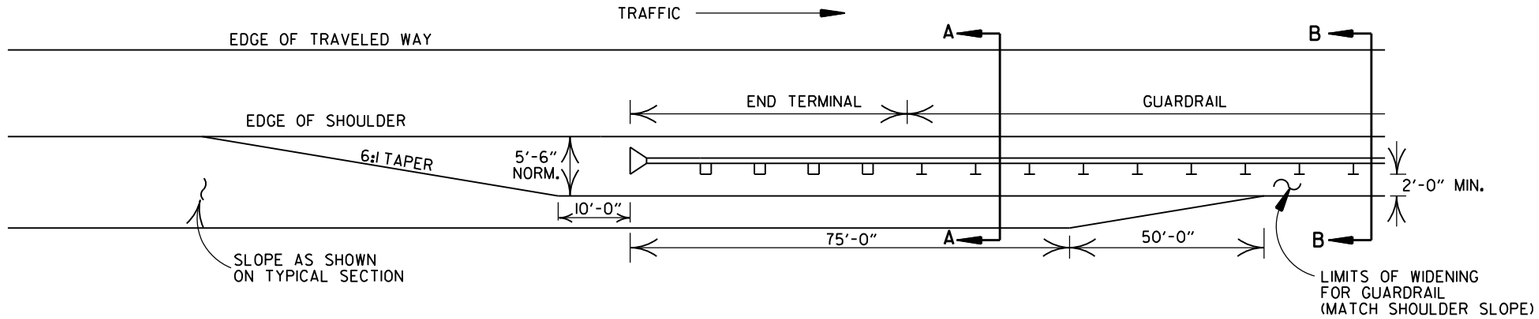

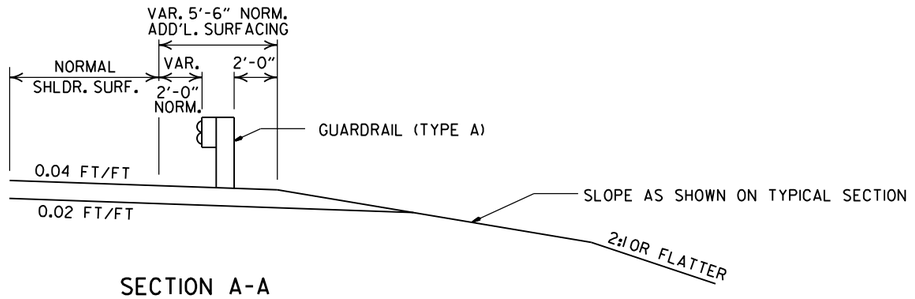

SECTION A-A

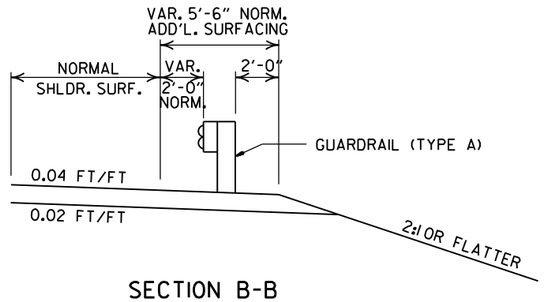

SECTION B-B

DETAILS OF WIDENING FOR GUARDRAIL

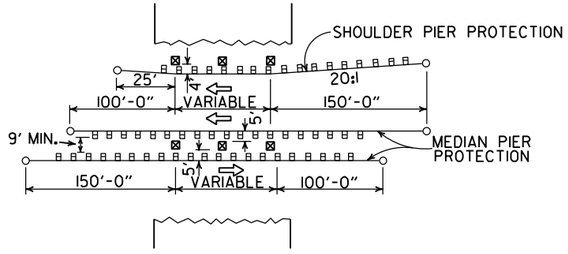

METHOD OF INSTALLATION OF GUARDRAIL AT FIXED OBSTACLE

NOTE: NORMAL SECTION TO BE WIDENED APPROX. 5'-6" EACH SIDE TO SUPPORT GUARDRAIL.

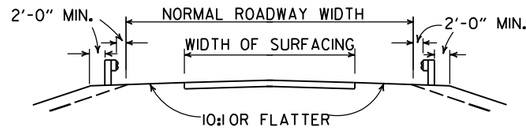

SECTION ON TANGENT

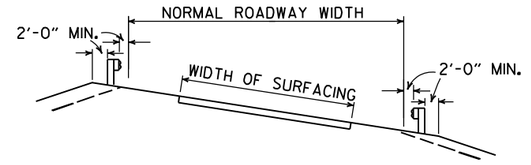

SECTION ON CURVE

DETAILS SHOWING POSITION OF GUARDRAIL ON HIGHWAY

DATE	REVISION	DATE FILM
11-07-19	RENUMBERED AND RENAMED	
4-17-08	MINOR REVISION	
11-10-05	DRAWN	

ARKANSAS STATE HIGHWAY COMMISSION

GUARDRAIL DETAILS

STANDARD DRAWING GR-9

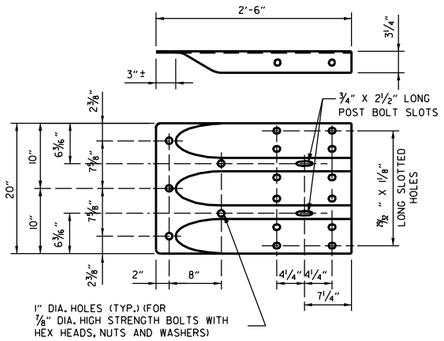

SPECIAL END SHOE

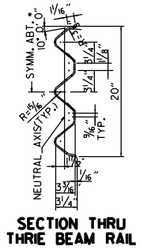

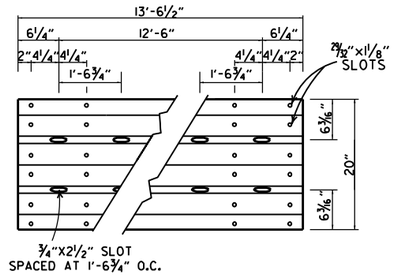

THRIE BEAM RAIL

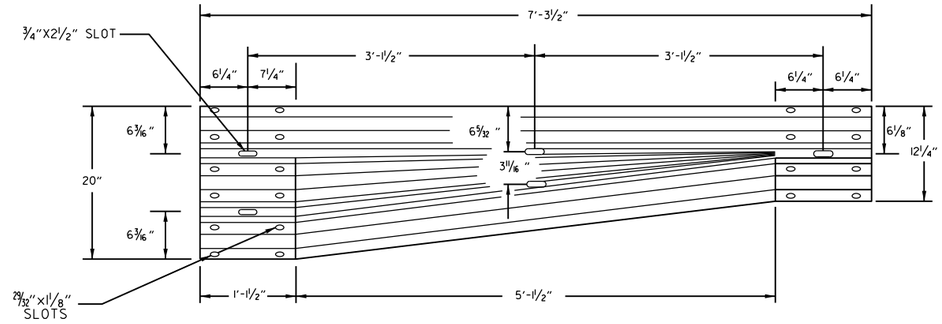

TRANSITION SECTION

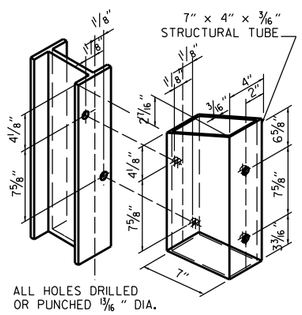

ATTACH BLOCKOUT TO POST USING ⅝" DIA. HEX HEAD BOLTS WITH 1½" O.D. CUT STEEL WASHERS AND NUT.

STRUCTURAL STEEL TUBING BLOCKOUT DETAIL

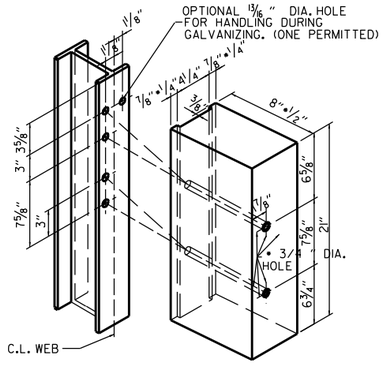

ALL HOLES 13/16" DIAMETER EXCEPT AS NOTED

HOLE PUNCHING DETAIL FOR STEEL POST & WOOD OR PLASTIC BLOCKOUTS

NOTE: BLOCKS SHALL BE THE SAME TYPE THROUGHOUT THE PROJECT LIMITS.

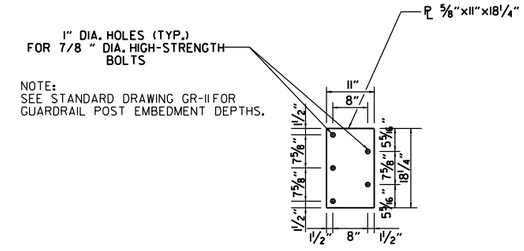

NOTE:
SEE STANDARD DRAWING GR-11 FOR GUARDRAIL POST EMBEDMENT DEPTHS.

CONNECTOR PLATE

CONNECTOR PLATE SHALL BE AASHTO M270, GR. 36 AND SHALL BE GALVANIZED AFTER FABRICATION. GALVANIZING SHALL CONFORM TO SUBSECTION 807.19 OF THE STANDARD SPECIFICATIONS. CONNECTOR PLATE TO BE BOLTED TO SPECIAL END SHOE USING ⅞" DIA. HIGH STRENGTH BOLTS, WITH THE HEADS PLACED ON THE TRAFFIC FACE. WASHERS SHALL BE USED UNDER THE HEAD AND NUT. BOLTS, NUTS AND WASHERS SHALL BE GALVANIZED AND SHALL CONFORM TO SUBSECTION 807.06.

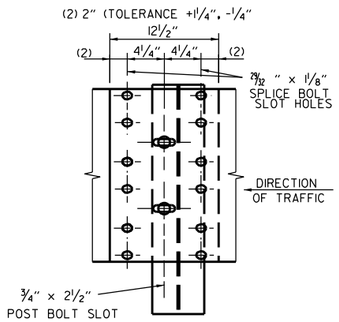

THRIE BEAM RAIL SPLICE AT POST

GENERAL NOTES:

THE THRIE BEAM RAIL, SPECIAL END SHOE, AND THE TRANSITION SECTION SHALL BE MADE OF STEEL AND SHALL BE 12 GAGE. ZINC COATING SHALL BE TYPE I.

RAIL POSTS SHALL BE SET PERPENDICULAR TO THE ROADWAY PROFILE GRADE AND VERTICALLY IN CROSS SECTION.

ALL BOLTS SHALL BE SUFFICIENT LENGTH TO EXTEND THROUGH THE FULL THICKNESS OF THE NUT AND NO MORE THAN 3"#4" BEYOND IT.

ALL LAP SPLICES, INCLUDING SPECIAL END SHOES, SHALL BE MADE IN THE DIRECTION SHOWN ON STANDARD DRAWINGS GR-8 & GR-13.

REFER TO STD. DRWG. GR-11 FOR POST DETAILS.

USE THRIE BEAM GUARDRAIL COMPONENTS OF SAME MATERIAL FOR ENTIRE JOB.

THRIE BEAM POSTS SHALL BE SAME MATERIAL AS W-BEAM POSTS FOR ENTIRE JOB.

WOOD POSTS & WOOD BLOCKS SHALL BE EITHER DENSE NO. 1 STRUCTURAL OR BETTER 9.7# (1400 f) OR NO. 1 1350 f SOUTHERN PINE.

DATE	REVISION	FILMED
11-07-19	RENAMED AND REVISED REFERENCES	
11-16-17	REVISED TRANSITION SECTION, GUARD RAIL HEIGHT, AND GENERAL NOTES; MOVED THRIE BEAM GUARD RAIL CONNECTIONS AT BRIDGES ENDS TO STD. DRWG. GR-12	
07-14-10	RAISED HEIGHT OF W-BEAM 1"	
11-29-07	ADDED PLASTIC BLOCKOUTS	
11-10-05	ADDED NOTE FOR ATTACHING STEEL BLOCKOUT	
11-18-04	REVISED GENERAL NOTES	
10-9-03	REVISED GENERAL NOTES	
04-10-03	REVISED GENERAL NOTES	
08-22-02	REVISED NOTE (2)	
06-29-00	MOVED DIMENSION LINES	
05-18-00	ADDED NOTE	
03-30-00	DRAWN & ISSUED	

ARKANSAS STATE HIGHWAY COMMISSION

GUARDRAIL DETAILS

STANDARD DRAWING GR-10

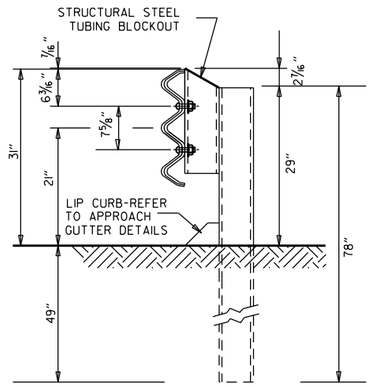

THRIE BEAM RAIL WITH STEEL TUBING BLOCKOUT
AND STEEL POST
POSTS 1-7

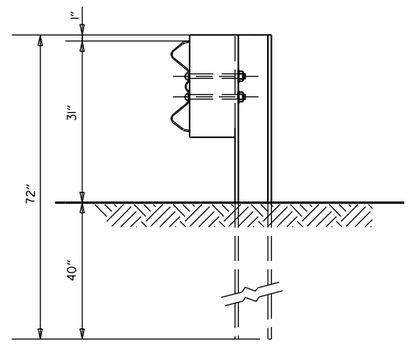

W-BEAM TO THRIE BEAM TRANSITION RAIL
WITH WOOD OR PLASTIC BLOCKOUT AND STEEL POST
POST 8

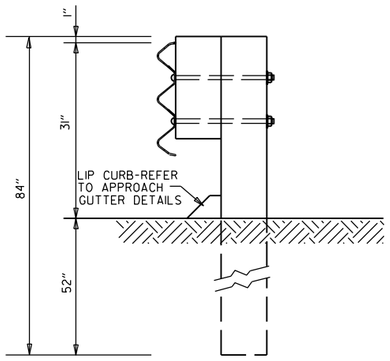

THRIE BEAM RAIL
WITH WOOD OR PLASTIC
BLOCKOUTS & WOOD POSTS
POSTS 1-6

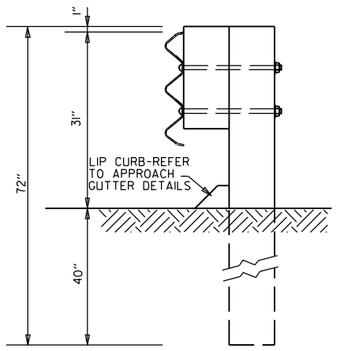

THRIE BEAM RAIL
WITH WOOD OR PLASTIC
BLOCKOUT & WOOD POST
POST 7

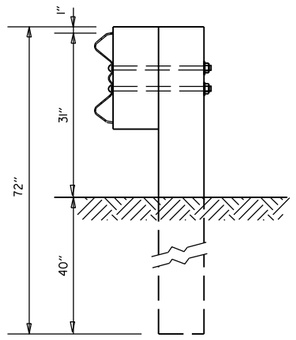

W-BEAM TO THRIE BEAM
TRANSITION RAIL WITH WOOD OR
PLASTIC BLOCKOUT & WOOD POST
POST 8

GENERAL NOTES:

RAIL POSTS SHALL BE SET PERPENDICULAR TO THE ROADWAY PROFILE GRADE AND VERTICALLY IN CROSS SECTION.

WOOD POSTS & WOOD BLOCKS SHALL BE EITHER DENSE NO. 1 STRUCTURAL OR BETTER 9.7f (1400 f) OR NO. 1 1350 f SOUTHERN PINE.

DATE	REVISION	FILMED
11-07-19	RENAMED	
11-16-17	REVISED GUARDRAIL HEIGHT, CHANGED STD. DWG. NUMBER FROM GR-10A TO GR-11	
07-14-10	REVISED POST 8 DIMENSIONS	
11-29-07	ADDED PLASTIC BLOCKOUTS	
08-22-02	REVISED LIP CURB NOTE	
03-30-00	DRAWN & ISSUED	

ARKANSAS STATE HIGHWAY COMMISSION

GUARDRAIL DETAILS

STANDARD DRAWING GR-11

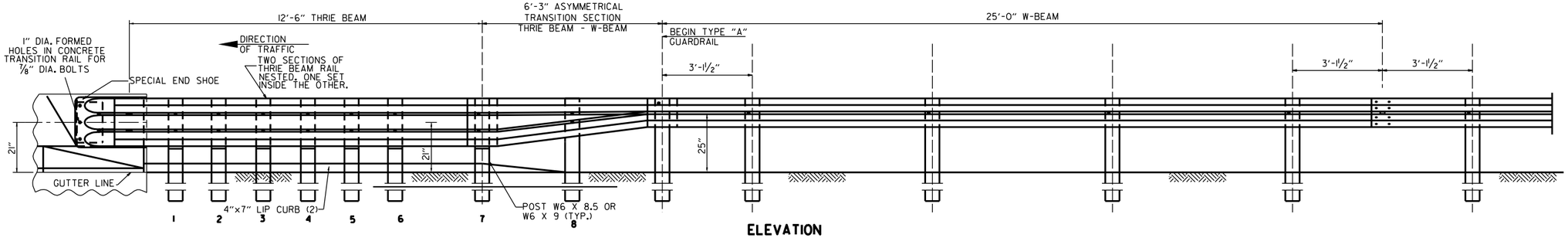

ELEVATION

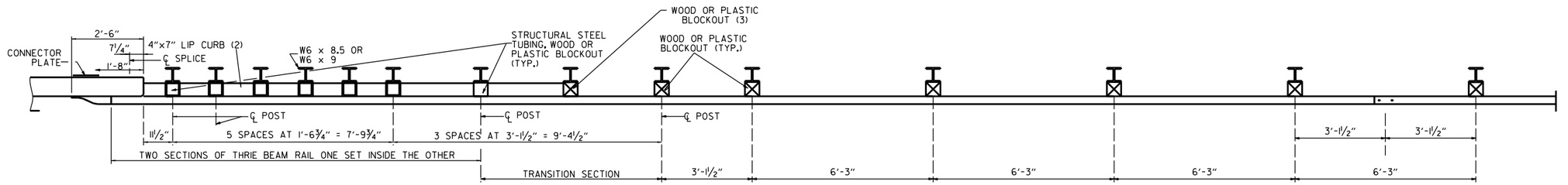

PLAN

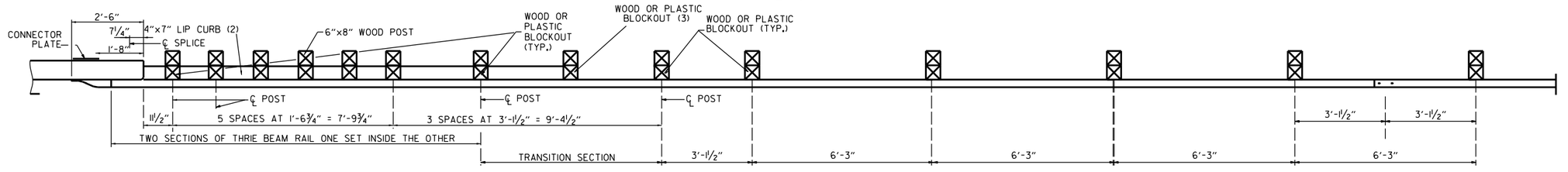

PLAN

(1) VERIFY BOLT SPACING FROM RAIL TRANSITION PRODUCER.
(2) REFER TO APPROACH GUTTER DETAILS.
(3) LENGTH OF BLOCKOUT ON POST 8 TO BE MODIFIED TO FIT RAIL WIDTH.

THRIE BEAM GUARDRAIL CONNECTION AT BRIDGE ENDS

GENERAL NOTES:

THE THRIE BEAM RAIL, SPECIAL END SHOE, AND THE TRANSITION SECTION SHALL BE MADE OF STEEL AND SHALL BE 12 GAGE. ZINC COATING SHALL BE TYPE I.

RAIL POSTS SHALL BE SET PERPENDICULAR TO THE ROADWAY PROFILE GRADE AND VERTICALLY IN CROSS SECTION.

ALL BOLTS SHALL BE SUFFICIENT LENGTH TO EXTEND THROUGH THE FULL THICKNESS OF THE NUT AND NO MORE THAN 3/4" BEYOND IT.

ALL LAP SPLICES, INCLUDING SPECIAL END SHOES, SHALL BE MADE IN THE DIRECTION SHOWN ON STANDARD DRAWINGS GR-8 & GR-13.

REFER TO STD. DRWG. GR-11 FOR POST DETAILS.

USE THRIE BEAM GUARDRAIL COMPONENTS OF SAME MATERIAL FOR ENTIRE JOB.

THRIE BEAM POSTS SHALL BE SAME MATERIAL AS W-BEAM POSTS FOR ENTIRE JOB.

POSTS SHALL NOT BE PLACED AT SPLICE LOCATIONS ALONG W-BEAM RAILS.

WOOD POSTS & WOOD BLOCKS SHALL BE EITHER DENSE NO. 1 STRUCTURAL OR BETTER 9.7f (1400 f) OR NO. 1 1350 f SOUTHERN PINE.

DATE	REVISION	FILMED
05-14-20	REVISED NOTES	
11-07-19	RENAMED & REVISED REFERENCES	
11-16-17	RE-DRAWN FROM STD. DWG. GR-10 & ISSUED	

ARKANSAS STATE HIGHWAY COMMISSION

GUARDRAIL DETAILS

STANDARD DRAWING GR-12

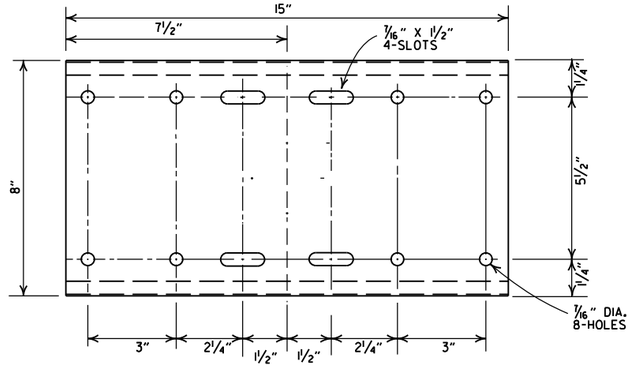

SHELF

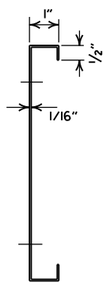

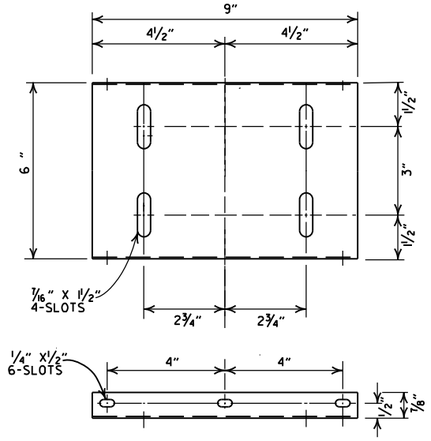

PLATFORM

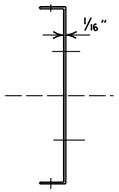

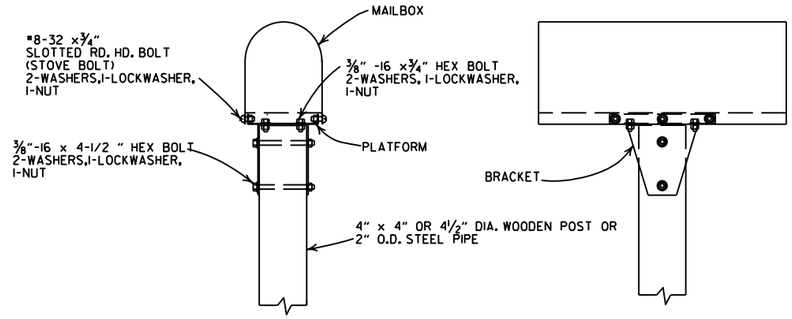

SINGLE INSTALLATION

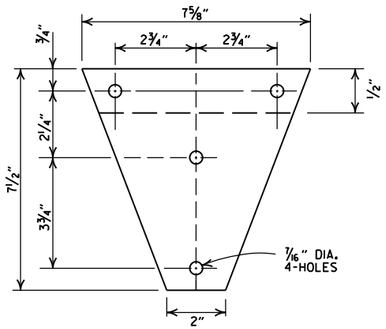

BRACKET

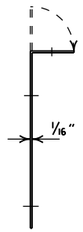

GENERAL NOTES

1. MAILBOX POSTS MAY BE WOOD OR METAL. WOOD POSTS SHALL BE PRESSURE TREATED FOR GROUND CONTACT IN ACCORDANCE WITH SECTION 637.02 OF THE STANDARD SPECIFICATIONS.
2. ANTI-TWIST PLATES SHALL BE USED ONLY ON METAL POSTS.
3. MAILBOX SHELF, BRACKET & PLATFORM SHALL BE GALVANIZED OR PAINTED STEEL. HOWEVER TREATED WOOD MAY BE USED WITH WOODEN POSTS. THE WOODEN SHELF, BRACKET & PLATFORM SHALL BE A MINIMUM OF 3/4" THICK AND SHALL BE ASSEMBLED WITH BOLTS OF THE APPROPRIATE LENGTH WITH SIX 8 X 3/4" FLATHEAD WOOD SCREWS USED TO ATTACH THE MAILBOX TO THE PLATFORM.
4. THE MAILBOX SHELF AND PLATFORM THAT IS SHOWN IS FOR STANDARD SIZE MAILBOXES. THE SHELF AND PLATFORM SIZE SHALL BE MODIFIED TO FIT MAILBOXES OF A DIFFERENT SIZE.
5. METAL PIPE FOR MAILBOX SUPPORT SHALL BE 2" OUTSIDE DIAMETER STEEL WITH A WALL THICKNESS OF 0.145" AND A WEIGHT OF 2.72 LBS PER FT. OUTSIDE DIAMETER AND WEIGHT SHALL HAVE A TOLERANCE OF +/- 5% ACCORDING TO AASHTO M 181.
6. MAILBOX SUPPORT SYSTEM DIFFERING FROM THOSE SHOWN MAY BE USED, PROVIDED THEY ARE ON THE ARDOT QUALIFIED PRODUCTS LIST FOR MAILBOX SUPPORTS.

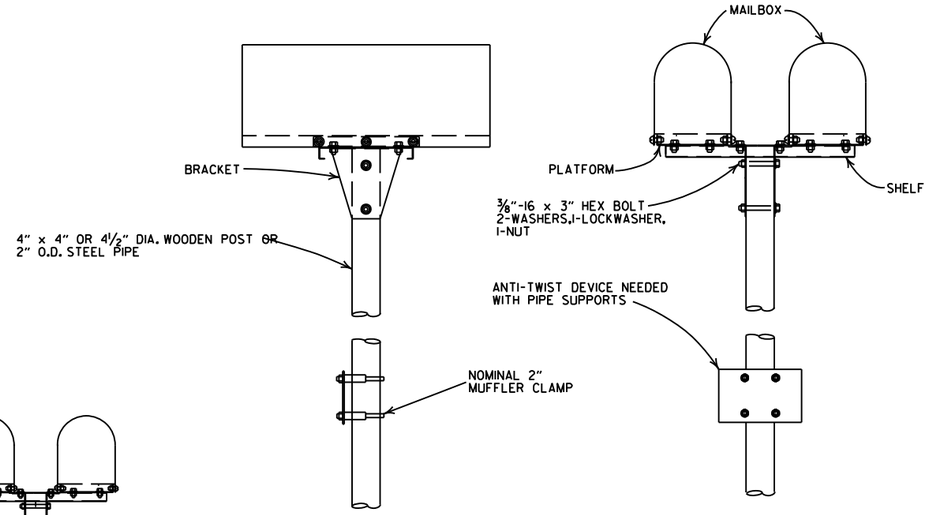

DOUBLE INSTALLATION

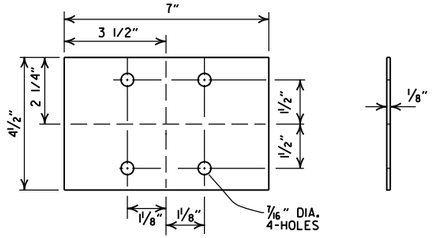

ANTI-TWIST PLATE

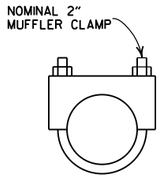

CLAMP

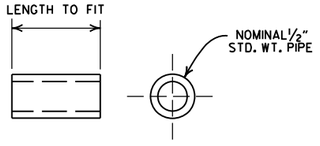

SPACER

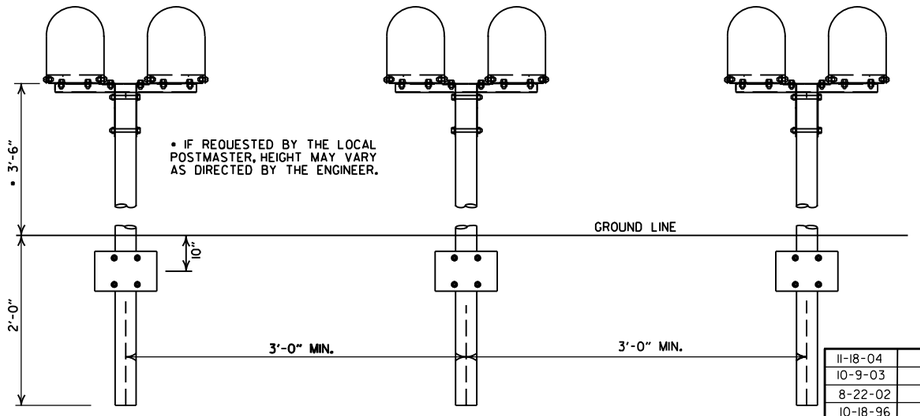

SPACING FOR MULTIPLE POST INSTALLATION

DATE	FILMED	REVISION
11-18-04		REVISED NOTES
10-9-03		REVISED NOTE 6
8-22-02		REVISED NOTE 6
10-18-96		CORRECTED AASHTO
10-1-92		CORRECTED SPELLING
9-26-91		NEW PHONE NUMBER
8-15-91		ADDED NOTE
11-30-89		ADJUSTED HEIGHT & ADDED NOTE
2-16-89		DELETED SLOTS FROM SHELF & PLTF
11-17-88	10-1-92	ADJUSTED DIMENSIONS OF STEEL POSTS
7-15-88	20-7-15-88	ISSUED

ARKANSAS STATE HIGHWAY COMMISSION

MAILBOX DETAILS

STANDARD DRAWING MB-1

REINFORCED CONCRETE ARCH PIPE DIMENSIONS

EQUIV. DIA.	SPAN		RISE	
	AASHTO M 206	ARDOT NOMINAL	AASHTO M 206	ARDOT NOMINAL
INCHES	INCHES			
15	18	18	11	11
18	22	22	13½	14
21	26	26	15½	16
24	28½	29	18	18
30	36¼	36	22½	23
36	43⅜	44	26⅝	27
42	51⅛	51	31⅝	31
48	58½	59	36	36
54	65	65	40	40
60	73	73	45	45
72	88	88	54	54
84	102	102	62	62
90	115	115	72	72
96	122	122	77½	77
108	138	138	87⅛	87
120	154	154	96⅞	97
132	168¾	169	106½	107

THE MEASURED SPAN AND RISE SHALL NOT VARY MORE THAN ± 2 PERCENT FROM THE VALUES SPECIFIED BY AASHTO M206.

REINFORCED CONCRETE HORIZONTAL ELLIPTICAL PIPE DIMENSIONS

EQUIV. DIA.	AASHTO M 207	
	SPAN	RISE
INCHES	INCHES	
18	23	14
24	30	19
27	34	22
30	38	24
33	42	27
36	45	29
39	49	32
42	53	34
48	60	38
54	68	43
60	76	48
66	83	53
72	91	58
78	98	63
84	106	68

THE MEASURED SPAN AND RISE SHALL NOT VARY MORE THAN ± 2 PERCENT FROM THE VALUES SPECIFIED BY AASHTO M207.

CONSTRUCTION SEQUENCE

1. PLACE STRUCTURAL BEDDING MATERIAL TO GRADE. DO NOT COMPACT.
2. INSTALL PIPE TO GRADE.
3. COMPACT STRUCTURAL BEDDING OUTSIDE THE MIDDLE THIRD OF THE PIPE.
4. PLACE AND COMPACT THE HAUNCH AREA UP TO THE MIDDLE OF THE PIPE.
5. COMPLETE BACKFILL ACCORDING TO SUBSECTION 606.03.(f)(1).

NOTE: HAUNCH AND STRUCTURAL BEDDING MATERIAL WILL NOT BE PAID FOR SEPARATELY, BUT COMPENSATION WILL BE CONSIDERED TO BE INCLUDED IN THE PRICE BID PER LINEAR FOOT OF CONCRETE PIPE.

- LEGEND -

D_1 = NORMAL INSIDE DIAMETER OF PIPE
D_o = OUTSIDE DIAMETER OF PIPE
H = FILL COVER HEIGHT OVER PIPE (FEET)
MIN. = MINIMUM
= UNDISTURBED SOIL

INSTALLATION TYPE	MATERIAL REQUIREMENTS FOR HAUNCH AND STRUCTURAL BEDDING
TYPE 1	AGGREGATE BASE COURSE (CLASS 5 OR CLASS 7)
TYPE 2	SELECTED MATERIALS (CLASS SM-1, SM-2, OR SM-4) OR TYPE 1 INSTALLATION MATERIAL*
TYPE 3**	AASHTO CLASSIFICATION A-1 THRU A-6 SOIL OR TYPE 1 OR 2 INSTALLATION MATERIAL

* SM-3 WILL NOT BE ALLOWED.

** MATERIALS SHALL NOT INCLUDE ORGANIC MATERIALS OR STONES LARGER THAN 3 INCHES.

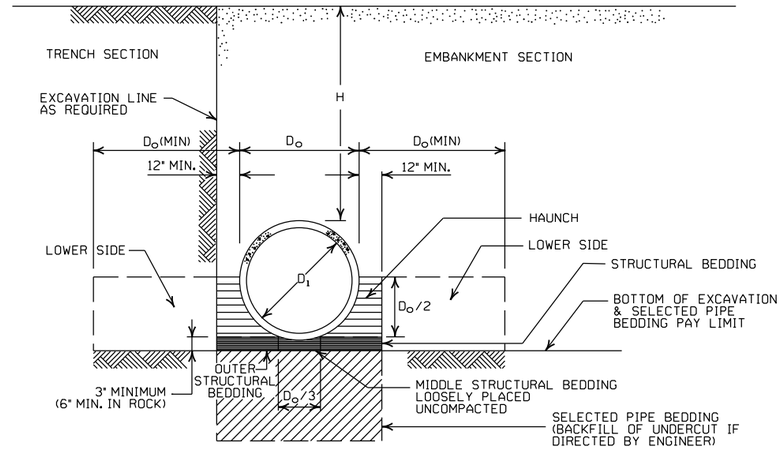

EMBANKMENT AND TRENCH INSTALLATIONS

1. MATERIAL IN THE HAUNCH AND OUTER STRUCTURAL BEDDING SHALL BE COMPACTED TO 95% OF THE MAXIMUM DENSITY ACCORDING TO THE TYPE OR CLASS OF MATERIAL USED.
2. FOR TRENCHES WITH WALLS OF NATURAL SOIL, THE DENSITY OF THE SOIL IN THE LOWER SIDE ZONE SHALL BE AS FIRM AS THE 95% DENSITY REQUIRED FOR THE HAUNCH. IF THE EXISTING SOIL DOES NOT MEET THIS CRITERIA, IT SHALL BE REMOVED AND RECOMPACTED TO 95% OF THE MAXIMUM DENSITY ACCORDING TO THE TYPE OF MATERIAL USED.
3. FOR EMBANKMENTS, THE MATERIAL IN THE LOWER SIDE ZONE SHALL BE COMPACTED TO 95% OF THE MAXIMUM DENSITY ACCORDING TO THE TYPE OR CLASS OF MATERIAL USED.

GENERAL NOTES

1. CONCRETE PIPE CULVERT CONSTRUCTION SHALL CONFORM TO ARKANSAS DEPARTMENT OF TRANSPORTATION STANDARD SPECIFICATIONS FOR HIGHWAY CONSTRUCTION (CURRENT EDITION), WITH APPLICABLE SUPPLEMENTAL SPECIFICATIONS AND SPECIAL PROVISIONS. UNLESS OTHERWISE NOTED IN THE PLANS, SECTION AND SUBSECTION REFER TO THE STANDARD CONSTRUCTION SPECIFICATIONS.
2. CONCRETE PIPE CULVERT DESIGN SHALL CONFORM TO AASHTO LRFD BRIDGE DESIGN SPECIFICATIONS, FIFTH EDITION (2010) WITH 2010 INTERIMS.
3. ALL PIPE SHALL CONFORM TO SECTION 606. CIRCULAR R.C. PIPE CULVERTS SHALL CONFORM TO AASHTO M170. R.C. ARCH PIPE CULVERTS SHALL CONFORM TO AASHTO M206 AND HORIZONTAL ELLIPTICAL PIPE CULVERTS SHALL CONFORM TO AASHTO M207.
4. ALL PIPE SHALL BE PROTECTED DURING CONSTRUCTION BY A COVER SUFFICIENT TO PREVENT DAMAGE FROM PASSAGE OF EQUIPMENT.
5. THE MINIMUM TRENCH WIDTH SHALL BE THE OUTSIDE DIAMETER OF THE PIPE PLUS 24 INCHES. THE MAXIMUM ALLOWABLE TRENCH WIDTH SHALL BE THE MINIMUM WIDTH PRACTICABLE FOR WORKING CONDITIONS.
6. MULTIPLE PIPE CULVERTS SHALL BE INSTALLED WITH A MINIMUM CLEARANCE OF 24 INCHES BETWEEN STRINGS OF PIPE. REFER TO STD. DWG. FES-2 FOR MINIMUM CLEARANCE WHERE FLARED END SECTIONS ARE USED.
7. IMPERVIOUS MATERIAL SHOULD BE PLACED AS DIRECTED BY THE ENGINEER AT THE ENDS OF THE CULVERT TO PREVENT LOSS OF STRUCTURAL BEDDING WHEN PERVIOUS MATERIAL IS USED FOR STRUCTURAL BEDDING AND/OR BACKFILL.
8. NOT MORE THAN ONE LIFTING HOLE MAY BE PROVIDED IN CONCRETE PIPE TO FACILITATE HANDLING. HOLE MAY BE CAST IN PLACE, CUT INTO THE FRESH CONCRETE AFTER FORMS ARE REMOVED, OR DRILLED. THE HOLE SHALL NOT BE MORE THAN TWO INCHES IN DIAMETER OR TWO INCHES SQUARE. CUTTING OR DISPLACEMENT OF REINFORCEMENT WILL NOT BE PERMITTED. SPALLED AREAS AROUND THE HOLE SHALL BE REPAIRED IN A WORKMANLIKE MANNER. LIFTING HOLE SHALL BE FILLED WITH MORTAR, CONCRETE, OR OTHER METHOD AS APPROVED BY THE ENGINEER.
9. WHEN DIRECTED BY THE ENGINEER, UNSUITABLE MATERIAL THAT IS ENCOUNTERED AT THE BOTTOM OF THE EXCAVATED TRENCH (BELOW THE AREA IDENTIFIED AS "STRUCTURAL BEDDING" ABOVE) WILL BE EXCAVATED AND REPLACED WITH SELECTED PIPE BEDDING. THE QUANTITY OF MATERIAL REQUIRED TO BACKFILL THE UNDERCUT AREA UP TO THE SELECTED PIPE BEDDING PAY LIMIT DESIGNATED ABOVE WILL BE MEASURED AND PAID FOR AS "SELECTED PIPE BEDDING."
10. WHEN THE EXISTING MATERIAL EXCAVATED FOR THE PIPE TRENCH IS DETERMINED BY THE ENGINEER TO BE UNSUITABLE FOR BACKFILLING THE PIPE (ABOVE THE AREA IDENTIFIED ABOVE AS THE HAUNCH), BORROW MATERIAL OR MATERIAL FROM THE ROADWAY EXCAVATION WILL BE USED TO BACKFILL THE PIPE. IF SUITABLE MATERIAL IS NOT AVAILABLE, THE ENGINEER MAY AUTHORIZE THE USE OF "SELECTED PIPE BACKFILL."

MINIMUM HEIGHT OF FILL "H" OVER CIRCULAR R.C. PIPE CULVERTS

	CLASS OF PIPE			
	CLASS III		CLASS IV	CLASS V
INSTALLATION TYPE	TYPE 1 OR 2	TYPE 3	ALL	ALL
PIPE ID (IN.)	FEET			
12-15	2	2.5	2	1
18-24	2.5	3	2	1
27-33	3	4	2	1
36-42	3.5	5	2	1
48	4.5	5.5	2	1
54-60	5	7	2	1
66-78	6	8	2	1
84-108	7.5	8	2	1

NOTE: FOR MINIMUM COVER VALUES, "H" SHALL INCLUDE A MINIMUM OF 12" OF PAVEMENT AND/OR BASE.

MAXIMUM HEIGHT OF FILL "H" OVER CIRCULAR R.C. PIPE CULVERTS

INSTALLATION TYPE	CLASS OF PIPE		
	CLASS III	CLASS IV	CLASS V
	FEET		
TYPE 1	21	32	50
TYPE 2	16	25	39
TYPE 3	12	20	30

NOTE: IF FILL HEIGHT EXCEEDS 50 FEET, A SPECIAL DESIGN CONCRETE PIPE WILL BE REQUIRED USING TYPE 1 INSTALLATION.

MINIMUM HEIGHT OF FILL "H" OVER R.C. ARCH & HORIZONTAL ELLIPTICAL PIPE CULVERTS

INSTALLATION TYPE	CLASS OF PIPE	
	CLASS III	CLASS IV
	FEET	
TYPE 2 OR TYPE 3	2.5	1.5

NOTE: TYPE 1 INSTALLATION WILL NOT BE ALLOWED FOR ARCH & HORIZONTAL ELLIPTICAL PIPE CULVERTS.

NOTE: FOR MINIMUM COVER VALUES, "H" SHALL INCLUDE A MINIMUM OF 12" OF PAVEMENT AND/OR BASE.

MAXIMUM HEIGHT OF FILL "H" OVER R.C. ARCH & HORIZONTAL ELLIPTICAL PIPE CULVERTS

INSTALLATION TYPE	CLASS OF PIPE	
	CLASS III	CLASS IV
	FEET	
TYPE 2	13	21
TYPE 3	10	16

NOTE: TYPE 1 INSTALLATION WILL NOT BE ALLOWED FOR ARCH & HORIZONTAL ELLIPTICAL PIPE CULVERTS.

DATE	REVISION	DATE FILMED
2-27-14	REVISED GENERAL NOTE 1.	
12-15-11	REVISED FOR LRFD DESIGN SPECIFICATIONS	
5-18-00	REVISED TYPE 3 BEDDING & ADDED NOTE	
3-30-00	REVISED INSTALLATIONS	
11-06-97	ISSUED	

ARKANSAS STATE HIGHWAY COMMISSION

CONCRETE PIPE CULVERT FILL HEIGHTS & BEDDING

STANDARD DRAWING PCC-1

CORRUGATED STEEL PIPE (ROUND)

PIPE DIAMETER (INCHES)	① MINUMUM COVER TOP OF PIPE TO TOP OF GROUND "H" (FEET)	MAX. FILL HEIGHT "H" ABOVE TOP OF PIPE (FEET)				
		METAL THICKNESS (INCHES)				
		0.064	0.079	0.109	0.138	0.168
2⅔ INCH BY ½ INCH CORRUGATION RIVETED, WELDED, OR HELICAL LOCK-SEAM						
12	1	84	91			
15	1	67	73			
18	1	56	61			
24	1	42	46	59		
30	2	34	36	47		
36	2		30	39	41	
42	2		43	67	70	73
48	2		37	58	61	64
② 3 INCH BY 1 INCH OR 5 INCH BY 1 INCH CORRUGATION RIVETED, WELDED, BOLTED, OR HELICAL LOCK-SEAM						
36	1	48	60	88	111	118
42	1	41	51	72	90	102
48	1	36	45	64	77	85
54	2	32	40	59	71	79
60	2	29	36	53	64	71
66	2	26	33	47	58	64
72	2	24	30	44	53	59
78	2		28	41	49	54
84	2		26	38	45	51
90	2		24	35	43	45
96	2		22	33	40	44
102	2			31	38	42
108	2			30	35	39
114	2			28	34	37
120	2			27	32	35

CORRUGATED ALUMINUM PIPE (ROUND)

PIPE DIAMETER (INCHES)	① MINUMUM COVER TOP OF PIPE TO TOP OF GROUND "H" (FEET)	MAX. FILL HEIGHT "H" ABOVE TOP OF PIPE (FEET)				
		METAL THICKNESS IN INCHES				
		0.060	0.075	0.105	0.135	0.164
		2 ⅔ INCH BY ½ INCH CORRUGATION RIVETED OR HELICAL LOCK-SEAM				
12	1	45	45			
18	2	30	30	52		
24	2	22	22	39	41	
30	2		18	31	32	34
36	2.5		15	26	27	28
42	2			43	43	44
48	2			40	41	43
54	2			35	37	38
60	2				33	34
66	2					31
72	2					29

CONSTRUCTION SEQUENCE

1. PLACE STRUCTURAL BEDDING MATERIAL TO GRADE. DO NOT COMPACT.
2. INSTALL PIPE TO GRADE.
3. COMPACT STRUCTURAL BEDDING OUTSIDE THE MIDDLE THIRD OF THE PIPE.
4. COMPLETE STRUCTURAL BACKFILL OPERATION BY WORKING FROM SIDE TO SIDE OF THE PIPE. THE SIDE TO SIDE STRUCTURAL BACKFILL DIFFERENTIAL SHALL NOT EXCEED 24 INCHES OR 1/3 THE SIZE OF THE PIPE, WHICHEVER IS LESS.

NOTE: STRUCTURAL BACKFILL AND STRUCTURAL BEDDING MATERIAL WILL NOT BE PAID FOR SEPARATELY, BUT COMPENSATION WILL BE CONSIDERED TO BE INCLUDED IN THE PRICE BID PER LINEAR FOOT OF METAL PIPE.

INSTALLATION TYPE	MATERIAL REQUIREMENTS FOR STRUCTURAL BACKFILL AND STRUCTURAL BEDDING
TYPE 1	AGGREGATE BASE COURSE (CLASS 4, 5, 6, OR 7)
TYPE 2	SELECTED MATERIALS (CLASS SM-1, SM-2, OR SM-4) OR TYPE 1 INSTALLATION MATERIAL ③

③ SM-3 WILL NOT BE ALLOWED.

EQUIVALENT METAL THICKNESSES AND GAUGES

METAL THICKNESS IN INCHES			GAUGE NUMBER
STEEL			
ZINC COATED	UNCOATED	ALUMINUM	
0.064	0.0598	0.060	16
0.079	0.0747	0.075	14
0.109	0.1046	0.105	12
0.138	0.1345	0.135	10
0.168	0.1644	0.164	8

CORRUGATED METAL PIPE ARCHES

EQUIV. DIA. (INCHES)	PIPE DIMENSION SPAN X RISE (INCHES)	MINUMUM CORNER RADIUS (INCHES)	STEEL			ALUMINUM		
			MIN. THICKNESS REQUIRED INCHES	① MIN. HEIGHT OF FILL, "H" (FT.) INSTALLATION TYPE 1	MAX. HEIGHT OF FILL, "H" (FT.) INSTALLATION TYPE 1	MIN. THICKNESS REQUIRED INCHES	① MIN. HEIGHT OF FILL, "H" (FT.) INSTALLATION TYPE 1	MAX. HEIGHT OF FILL, "H" (FT.) INSTALLATION TYPE 1
			2 ⅔ INCH BY ½ INCH CORRUGATION RIVETED, WELDED, OR HELICAL LOCK-SEAM			2 ⅔ INCH BY ½ INCH CORRUGATION RIVETED OR HELICAL LOCK-SEAM		
15	17x13	3	0.064	2	15	0.060	2	15
18	21x15	3	0.064	2	15	0.060	2	15
21	24x18	3	0.064	2.25	15	0.060	2.25	15
24	28x20	3	0.064	2.5	15	0.075	2.5	15
30	35x24	3	0.079	3	12	0.075	3	12
36	42x29	3½	0.079	3	12	0.105	3	12
42	49x33	4	0.079	3	12	0.105	3	12
48	57x38	5	0.109	3	13	0.135	3	13
54	64x43	6	0.109	3	14	0.135	3	14
60	71x47	7	0.138	3	15	0.135	3	15
66	77x52	8	0.168	3	15	0.164	3	15
72	83x57	9	0.168	3	15			
			② 3 INCH BY 1 INCH OR 5 INCH BY 1 INCH CORRUGATION RIVETED, WELDED, OR HELICAL LOCK-SEAM					
				INSTALLATION	INSTALLATION			
				TYPE 2 / TYPE 1	TYPE 2 / TYPE 1			
36	40x31	5	0.079	3 / 2	12 / 15			
42	46x36	6	0.079	3 / 2	13 / 15			
48	53x41	7	0.079	3 / 2	13 / 15			
54	60x46	8	0.079	3 / 2	13 / 15			
60	66x51	9	0.079	3 / 2	13 / 15			
66	73x55	12	0.079	3 / 2	15 / 15			
72	81x59	14	0.079	3 / 2	15 / 15			
78	87x63	14	0.079	3 / 2	15 / 15			
84	95x67	16	0.109	3 / 2	15 / 15			
90	103x71	16	0.109	3 / 2	15 / 15			
96	112x75	18	0.109	3 / 2	15 / 15			
102	117x79	18	0.109	3 / 2	15 / 15			
108	128x83	18	0.138	3 / 2	15 / 15			

① FOR MINIMUM COVER VALUES, "H" SHALL INCLUDE A MINIMUM 12" OF PAVEMENT AND/OR BASE.

② WHERE THE STANDARD 2 2/3"x ½" CORRUGATION AND GAUGE IS SPECIFIED FOR A GIVEN DIAMETER, A PIPE OF THE SAME DIAMETER WITH A 3" x 1" OR 5" x 1" CORRUGATION MAY BE SUBSTITUTED, PROVIDING IT IS GAUGED FOR A FILL HEIGHT CONDITION EQUAL TO OR GREATER THAN THE MAXIMUM FILL HEIGHT CONDITION FOR THE SPECIFIED GAUGE AND CORRUGATION.

- LEGEND -

D_o = OUTSIDE DIAMETER OF PIPE
MAX. = MAXIMUM
MIN. = MINIMUM
= STRUCTURAL BACKFILL MATERIAL
= UNDISTURBED SOIL
EQUIV. DIA. = EQUIVALENT DIAMETER
H = FILL COVER HEIGHT OVER PIPE (FEET)

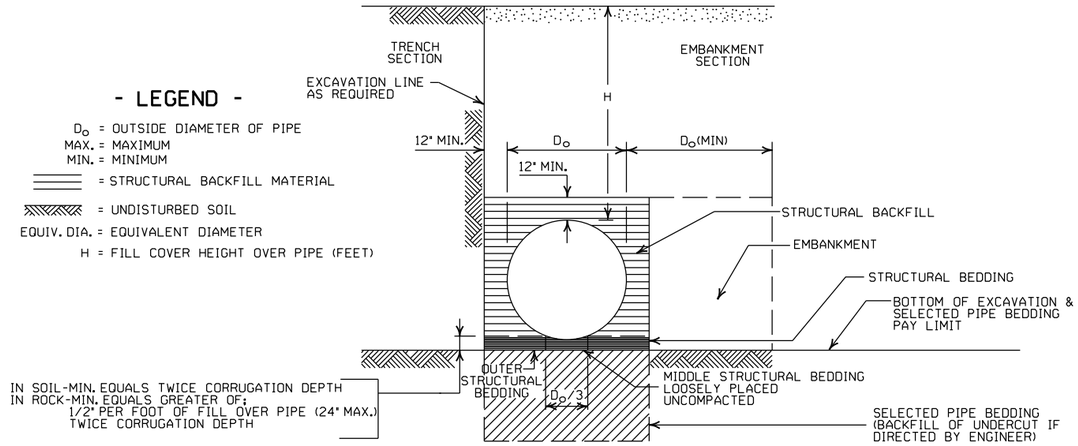

EMBANKMENT AND TRENCH INSTALLATIONS

1. STRUCTURAL BACKFILL, EMBANKMENT, AND OUTER STRUCTURAL BEDDING MATERIAL SHALL BE COMPACTED TO 95% OF THE MAXIMUM DENSITY ACCORDING TO THE TYPE OR CLASS OF MATERIAL USED.
2. INSTALLATION TYPE 1 OR 2 MAY BE USED FOR CORRUGATED STEEL OR ALUMINUM PIPE (ROUND).
3. INSTALALTION TYPE 1 SHALL BE USED FOR CORRUGATED STEEL OR ALUMINUM PIPE ARCHES WITH 2⅔" X ½" CORRUGATION.
4. INSTALLATION TYPE 1 OR 2 MAY BE USED FOR CORRUGATED STEEL OR ALUMINUM PIPE ARCHES WITH 3" X 1" OR 5" X 1" CORRUGATION.

GENERAL NOTES

1. METAL PIPE CULVERT CONSTRUCTION SHALL CONFORM TO ARKANSAS DEPARTMENT OF TRANSPORTATION STANDARD SPECIFICATIONS FOR HIGHWAY CONSTRUCTION (CURRENT EDITION), WITH APPLICABLE SUPPLEMENTAL SPECIFICATIONS AND SPECIAL PROVISIONS. UNLESS OTHERWISE NOTED IN THE PLANS, SECTION AND SUBSECTION REFER TO THE STANDARD CONSTRUCTION SPECIFICATIONS.
2. METAL PIPE CULVERT DESIGN SHALL CONFORM TO AASHTO LRFD BRIDGE DESIGN SPECIFICATIONS, FIFTH EDITION (2010) WITH 2010 INTERIMS.
3. METAL PIPE CULVERT MATERIALS AND INSTALLATIONS SHALL CONFORM TO SECTION 606 AND JOB SPECIAL PROVISION "METAL PIPE".
4. ALL PIPE SHALL BE PROTECTED DURING CONSTRUCTION BY A COVER SUFFICIENT TO PREVENT DAMAGE FROM PASSAGE OF EQUIPMENT.
5. THE MINIMUM TRENCH WIDTH SHALL BE THE OUTSIDE DIAMETER OF THE PIPE PLUS 24 INCHES. THE MAXIMUM ALLOWABLE TRENCH WIDTH SHALL BE THE MINIMUM WIDTH PRACTICABLE FOR WORKING CONDITIONS.
6. MULTIPLE PIPE CULVERTS SHALL BE INSTALLED WITH A MINIMUM CLEARANCE OF 24 INCHES BETWEEN STRINGS OF PIPE. REFER TO STD. DWG. FES-2 FOR MINIMUM CLEARANCE WHERE FLARED END SECTIONS ARE USED.
7. IMPERVIOUS MATERIAL SHOULD BE PLACED AS DIRECTED BY THE ENGINEER AT THE ENDS OF THE CULVERT TO PREVENT LOSS OF STRUCTURAL BEDDING WHEN PERVIOUS MATERIAL IS USED FOR STRUCTURAL BEDDING AND/OR BACKFILL.
8. WHEN DIRECTED BY THE ENGINEER, UNSUITABLE MATERIAL THAT IS ENCOUNTERED AT THE BOTTOM OF THE EXCAVATED TRENCH (BELOW THE AREA IDENTIFIED AS "STRUCTURAL BEDDING" ABOVE) WILL BE EXCAVATED AND REPLACED WITH SELECTED PIPE BEDDING. THE QUANTITY OF MATERIAL REQUIRED TO BACKFILL THE UNDERCUT AREA UP TO THE SELECTED PIPE BEDDING PAY LIMIT DESIGNATED ABOVE WILL BE MEASURED AND PAID FOR AS "SELECTED PIPE BEDDING."
9. WHEN THE EXISTING MATERIAL EXCAVATED FOR THE PIPE TRENCH IS DETERMINED BY THE ENGINEER TO BE UNSUITABLE FOR BACKFILLING THE PIPE (ABOVE THE AREA IDENTIFIED AS STRUCTURAL BACKFILL), BORROW MATERIAL OR MATERIAL FROM THE ROADWAY EXCAVATION WILL BE USED TO BACKFILL THE PIPE. IF SUITABLE MATERIAL IS NOT AVAILABLE, THE ENGINEER MAY AUTHORIZE THE USE OF "SELECTED PIPE BACKFILL."

DATE	REVISION	DATE FILMED
2-27-14	REVISED GENERAL NOTE 1.	
12-15-11	REVISED FOR LRFD DESIGN SPECS	
3-30-00	REVISED INSTALLATIONS	
11-06-97	ISSUED	

ARKANSAS STATE HIGHWAY COMMISSION

METAL PIPE CULVERT FILL HEIGHTS & BEDDING

STANDARD DRAWING PCM-1

NOTES:
1. REFER TO THE STRIPING DETAILS FOR PAVEMENT MARKING LINE WIDTHS.
2. THIS DRAWING SHALL BE USED IN CONJUNCTION WITH THE LATEST REVISED ADDITION OF THE "MANUAL ON UNIFORM TRAFFIC CONTROL DEVICES."
3. RAISED PAVEMENT MARKERS SHALL BE PLACED ON AN 80 FEET SPACING UNLESS OTHERWISE SHOWN IN THE PLANS.

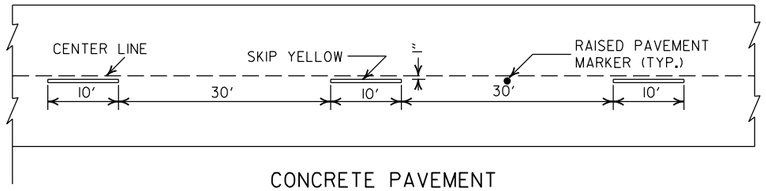

CONCRETE PAVEMENT

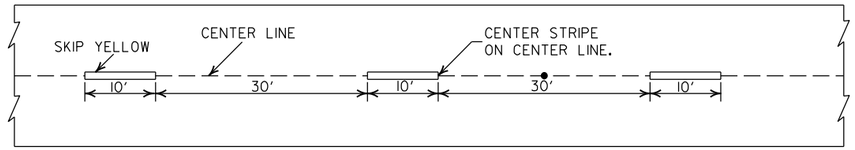

ASPHALT PAVEMENT

BROKEN LINE STRIPING

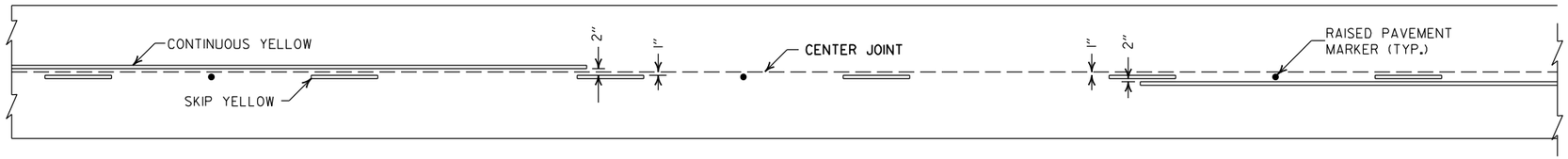

SOLID LINE STRIPING ON CONCRETE PAVEMENT

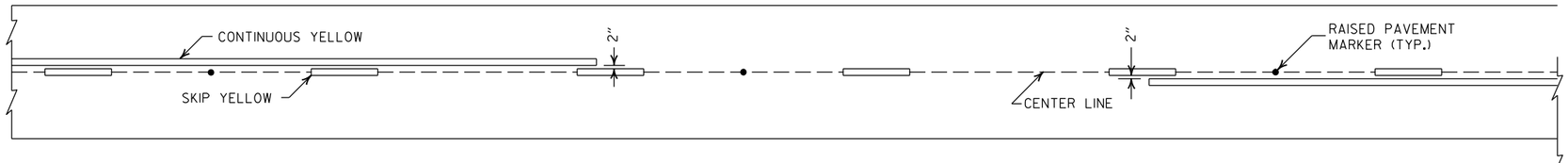

SOLID LINE STRIPING ON ASPHALT PAVEMENT

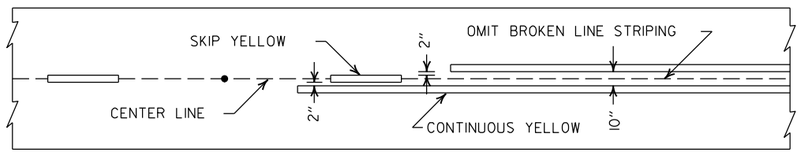

ASPHALT PAVEMENT

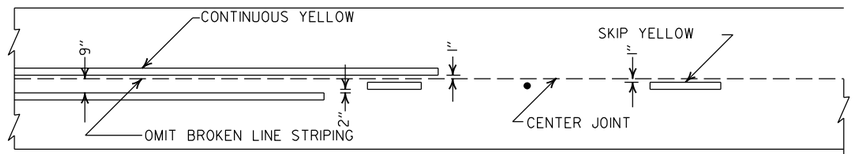

CONCRETE PAVEMENT

STRIPING AT ADJACENT NO PASSING LANES

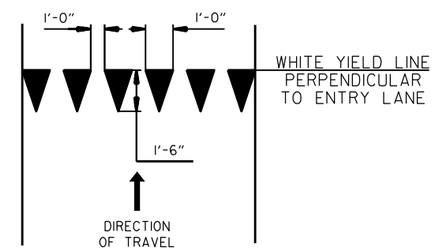

YIELD LINE DETAIL

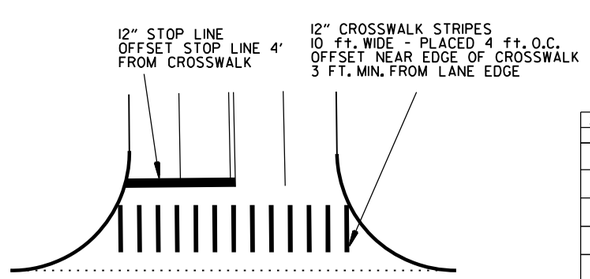

CROSSWALK AND STOP LINE DETAILS

2" FOR ASPHALT OR CONCRETE PAVEMENT
6" FOR BITUMINOUS SURFACE TREATMENT

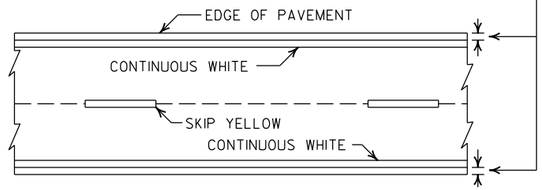

PAVEMENT EDGE LINE MARKING

NOTE:
THE RED LENS OF THE TYPE II R.P.M. SHALL FACE THE INCORRECT TRAFFIC MOVEMENT.

TYPE II
RED/CLEAR OR
YELLOW/YELLOW

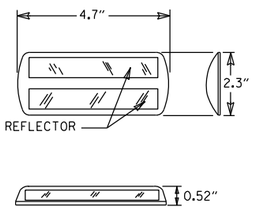

NOTE:
DIMENSIONS SHOWN FOR RAISED PAVEMENT MARKERS ARE TYPICAL. THE CONTRACTOR MAY SUBSTITUTE SIMILAR MARKERS WITH THE APPROVAL OF THE ENGINEER. REQUESTING APPROVAL FOR SIMILAR MARKERS MAY BE MADE BY REFERRING TO THE ARDOT QUALIFIED PRODUCTS LIST.

DETAIL OF STANDARD RAISED PAVEMENT MARKERS

DATE	REVISION	FILMED
2-27-20	REVISED STOP LINE DETAILS	
6-1-17	ADDED YIELD LINE DETAIL	
5-12-16	REVISED LINE WIDTHS, SPACING, & NOTES	
9-12-13	REVISED DETAIL OF STANDARD RAISED PAVEMENT MARKERS	
11-17-10	REVISED GENERAL NOTES & REMOVED PLOWABLE PVMT MRKRS	
11-18-04	REVISED NOTE 2 & GENERAL NOTES	
8-22-02	ADDED CROSSWALK & STOPBAR DTLS.	
7-02-98	ADDED DETAILS OF STD. RAISED PAV'T. MARKERS	
4-26-96	REV. NOTES 3&4; ADDED R.P.M.	
9-30-80	DRAWN	1-9-30-80

ARKANSAS STATE HIGHWAY COMMISSION

PAVEMENT MARKING DETAILS

STANDARD DRAWING PM-1

SUPERELEVATION TABLE FOR TWO - WAY TRAFFIC

DEGREE OF CURVE	30 MPH			35 MPH			40 MPH			45 MPH			50 MPH			55 MPH			60 MPH			65 MPH			70 MPH			75 MPH		
	e	Ls (FT)		e	Ls (FT)		e	Ls (FT)		e	Ls (FT)		e	Ls (FT)		e	Ls (FT)		e	Ls (FT)		e	Ls (FT)		e	Ls (FT)		e	Ls (FT)	
		MINIMUM	DESIRABLE		MINIMUM	DESIRABLE		MINIMUM	DESIRABLE		MINIMUM	DESIRABLE		MINIMUM	DESIRABLE		MINIMUM	DESIRABLE		MINIMUM	DESIRABLE		MINIMUM	DESIRABLE		MINIMUM	DESIRABLE		MINIMUM	DESIRABLE
0° 15'	NC			NC			NC			NC			NC			NC			NC			NC			NC			NC		
0° 30'	NC			NC			NC			NC			NC			NC			RC	96		RC	96		RC	96		0.022	101	
0° 45'	NC			NC			NC			NC			RC	96		RC	96		0.024	106		0.026	110		0.030	120		0.032	125	
1° 00'	NC			NC			NC			RC	90		0.022	101		0.026	110		0.030	120		0.034	130		0.038	139		0.042	149	300
1° 15'	NC			NC			RC	84		0.022	95		0.028	115		0.032	125		0.038	139		0.042	149		0.046	158	300	0.052	173	
1° 30'	NC			RC	78		0.022	88		0.028	108		0.032	125		0.038	139		0.044	154		0.050	168	300	0.056	182		0.062	197	
1° 45'	RC	72		RC	78		0.026	97		0.030	113		0.036	134		0.044	154		0.050	168	300	0.056	182		0.064	202		0.070	216	
2° 00'	RC	72		0.024	86		0.028	101		0.034	122		0.042	149		0.048	163		0.056	182		0.064	202		0.070	216		0.080	240	350
2° 15'	RC	72		0.026	90		0.032	109		0.038	131		0.046	158		0.054	178	300	0.062	197		0.070	216		0.078	235	350	0.088	259	
2° 30'	0.022	75		0.028	94		0.034	113		0.042	140		0.050	168		0.058	187		0.068	211		0.076	230		0.086	254		0.096	278	
2° 45'	0.024	79		0.030	98		0.038	122		0.046	149	200	0.054	178	250	0.064	202		0.072	221		0.082	245		0.092	269		0.100	288	400
3° 00'	0.026	83		0.034	105		0.040	126		0.050	158		0.058	187		0.068	211		0.078	235		0.088	259		0.098	283	400	D MAX = 2° 45'		
3° 15'	0.028	86		0.036	109		0.044	134	200	0.052	162		0.062	197		0.072	221		0.082	245		0.092	269		0.100	288		D MAX = 3° 30'		
3° 30'	0.030	90		0.038	113		0.046	139		0.056	171		0.066	206		0.076	230		0.086	254		0.096	278	350						
3° 45'	0.032	93		0.040	117		0.050	147		0.058	176		0.070	216		0.080	240		0.090	264		0.098	283							
4° 00'	0.034	97		0.042	121	200	0.052	151		0.062	185		0.072	221		0.084	250		0.094	274	350	0.100	288							
4° 15'	0.036	100		0.044	125		0.054	155		0.064	189		0.076	230		0.086	254		0.096	278		D MAX = 4° 15'								
4° 30'	0.036	100	200	0.046	129		0.056	160		0.068	198		0.078	235		0.090	264		0.098	283										
4° 45'	0.038	104		0.048	133		0.060	168		0.070	203	250	0.082	245		0.092	269	350	0.100	288										
5° 00'	0.040	108		0.050	137		0.062	172		0.072	207		0.084	250		0.094	274		D MAX = 5° 15'										
5° 30'	0.044	115		0.054	144		0.066	181		0.078	221		0.088	259	300	0.098	283												
6° 00'	0.046	119		0.058	152		0.070	189		0.082	230		0.092	269		0.100	288												
6° 30'	0.050	126		0.062	160		0.074	198	250	0.086	239		0.096	278		D MAX = 6° 30'														
7° 00'	0.052	130		0.064	164		0.078	206		0.090	248		0.098	283																
7° 30'	0.054	133		0.068	172		0.080	210		0.092	252	300	0.100	288																
8° 00'	0.058	140		0.070	176		0.084	219		0.094	257		D MAX = 8° 25'																	
8° 30'	0.060	144		0.072	179		0.086	223	250	0.096	261																			
9° 00'	0.062	148		0.076	187		0.088	227		0.098	266																			
9° 30'	0.064	151		0.078	191		0.092	235		0.100	270																			
10° 00'	0.066	155		0.080	195		0.094	240		D MAX = 10° 30'																				
11° 00'	0.070	162		0.084	203		0.096	244																						
12° 00'	0.074	169		0.088	211	250	0.098	248																						
13° 00'	0.076	173		0.090	215		0.100	252	300																					
14° 00'	0.080	180		0.094	222		D MAX = 13° 45'																							
15° 00'	0.082	184		0.096	226																									
16° 00'	0.086	191		0.098	230																									
17° 00'	0.088	194		0.100	234																									
18° 00'	0.090	198	250	D MAX = 19° 30'																										
19° 00'	0.092	202																												
20° 00'	0.094	205																												
21° 00'	0.096	209																												
22° 00'	0.096	209																												
23° 00'	0.098	212																												
24° 00'	0.098	212																												
25° 00'	0.100	216																												
D MAX = 28° 30'																														

GENERAL NOTES

1. ON PAVEMENT WITH TWO-WAY TRAFFIC, THE SUPERELEVATION SHALL BE REVOLVED ON THE INSIDE PAVEMENT EDGE UNLESS OTHERWISE NOTED ON THE PLANS
2. SUPERELEVATION VALUES SHOWN ON THE CROSS SECTIONS ARE VALUES (+) OR (-) TO BE ADDED TO OR SUBTRACTED FROM THE POINT OF CONTROL.
3. LENGTHS FOR L MAY BE ROUNDED IN MULTIPLES OF 25 FT. OR 50 FT. TO PERMIT SIMPLER CALCULATIONS.
4. PAVEMENTS WIDER THAN 2 LANES SHALL HAVE ADDITIONAL TRANSITION LENGTHS AS FOLLOWS:

3 LANE UNDIVIDED - - - - - +20%
4 LANE UNDIVIDED - - - - - +50%
5 LANE UNDIVIDED - - - - - +80%
6 LANE UNDIVIDED - - - - - +100%

NOTE: MAINTAIN NORMAL CROWN ON INSIDE UNTIL SUPERELEVATION EXCEEDS 2C.

RATE OF SUPERELEVATION SHALL BE COMPUTED ON STRAIGHT LINE METHOD USING APPLICABLE Ls.

SUPERELEVATION FORMULA = $\frac{Lde}{Ls}$

ABBREVIATIONS

NC - NORMAL CROWN
RC - REVERSE CROWN, SUPERELEVATION AT NORMAL CROWN SLOPE
e - RATE OF SUPERELEVATION (FT. PER FT.)
Ls - LENGTH OF SUPERELEVATION TRANSITION (FT.)
L - DISTANCE FROM BEGINNING OF SUPERELEVATION TRANSITION TO ANY POINT (FT.)
d - WIDTH OF PAVEMENT (FT.) OR WIDTH OF SUBGRADE (FT.)
C - NORMAL CROWN (FT.)

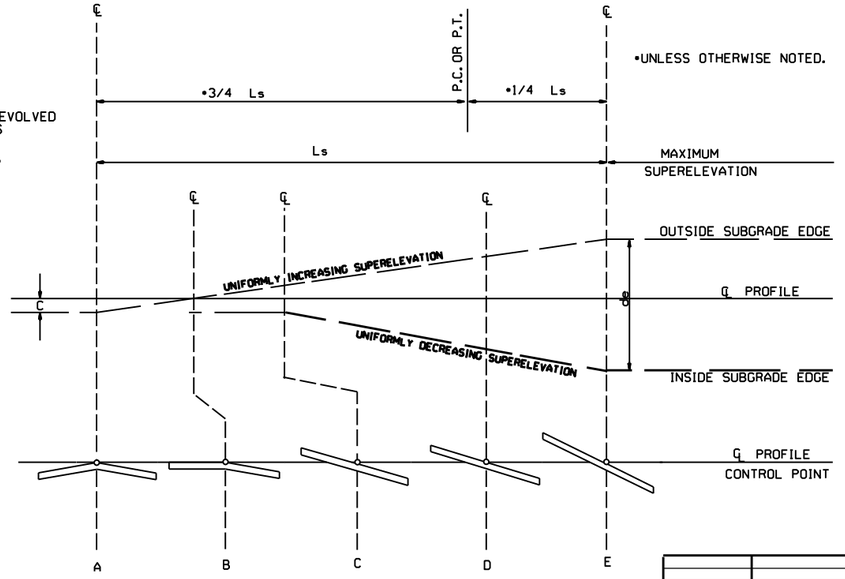

STANDARD METHOD WHEN SUPERELEVATION REVOLVES AROUND CENTER LINE

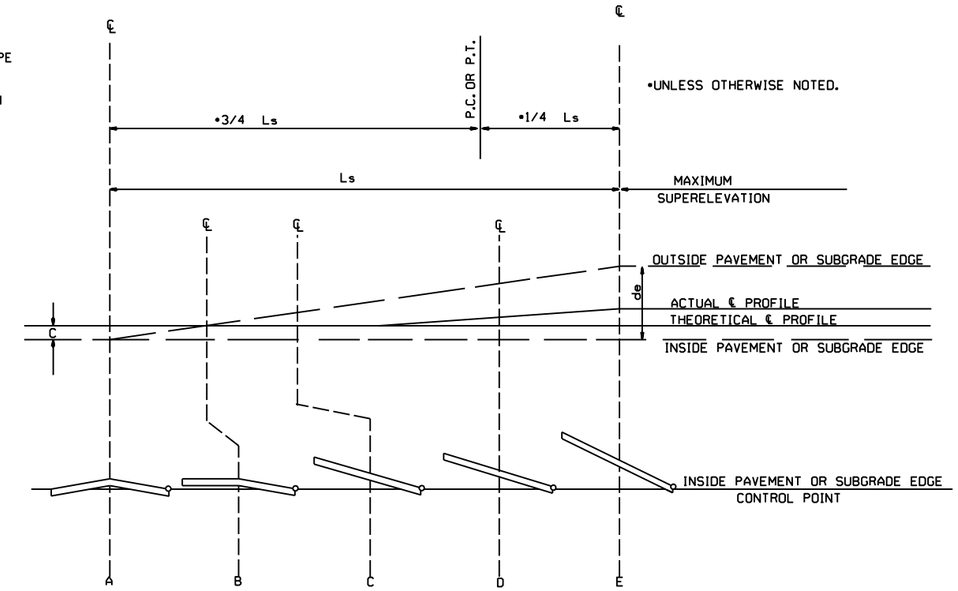

STANDARD METHOD WHEN SUPERELEVATION REVOLVES AROUND INNER SUBGRADE POINT OR INNER PAVEMENT EDGE

NOTE: MAINTAIN NORMAL CROWN ON INSIDE UNTIL SUPERELEVATION EXCEEDS 2C.

DATE	REVISION	
11-07-19	REVISED SUPERELEVATION TABLE	
10-18-96	ADDED FORMULA	
01-09-87	ISSUED	534-1-9-87
		DATE FILMED

ARKANSAS STATE HIGHWAY COMMISSION

TABLES AND METHOD OF SUPERELEVATION FOR TWO-WAY TRAFFIC

STANDARD DRAWING SE-2

R1-1



STANDARD 30"X30"
EXPRESSWAY 36"X36"
SPECIAL 48"X48"

R1-2

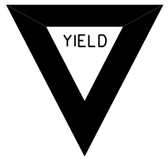

STD. 36"X36"X36"
EXPWY. 48"X48"X48"
FWY. 60"X60"X60"

R2-1



STD. 24"X30"
EXPWY. 36"X48"
FWY. 48"X60"

W3-5



STD. 36"X36"
EXPWY. 48"X48"
FWY. 48"X48"

W3-5a



STD. 36"X36"
EXPWY. 48"X48"
FWY. 48"X48"

R4-1



STD. 24"X30"
EXPWY. 36"X48"
FWY. 48"X60"

R4-2



STD. 24"X30"
EXPWY. 36"X48"
FWY. 48"X60"

R5-1



STD. 30"X30"
EXPWY. 36"X36"
SPECIAL 48"X48"

R11-2



48"X30"

R11-3A

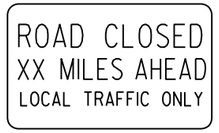

60"X30"

R11-4



60"X30"

W21-5a



STD. 36"X36"
FWY. 48"X48"

W1-1



STD. 36"X36"
FWY. 48"X48"

W1-2



STD. 36"X36"
FWY. 48"X48"

W1-3



STD. 48"X48"

W1-4



STD. 48"X48"

W1-6



STD. 48"X24"
SPECIAL 60"X30"

W1-8



STD. 18"X24"
SPECIAL 24"X30"
EXPWY. 30"X36"
FWY. 36"X48"

W3-1

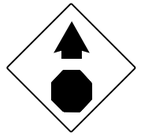

STD. 36"X36"
SPECIAL 48"X48"

W3-2



STD. 36"X36"
SPECIAL 48"X48"

W4-2

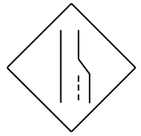

STD. 36"X36"
FWY. 48"X48"

W5-1



STD. 36"X36"
SPECIAL 48"X48"

W6-3



EXPWY. 36"X36"
SPECIAL 48"X48"

W8-7



EXPWY. 36"X36"
FWY. 48"X48"

W9-2



STD. 36"X36"
FWY. 48"X48"

W13-1



STD. 24"X24"

W20-1



STD. 48"X48"

W20-2



STD. 48"X48"

W20-3



STD. 48"X48"

W20-4



STD. 48"X48"

W20-5



STD. 48"X48"

W20-7a



STD. 36"X36"
FWY. 48"X48"

W21-2



STD. 30"X30"
SPECIAL 36"X36"

W21-5



STD. 30"X30"
SPECIAL 36"X36"

W24-1



STD. 36"X36"

W1-4b



STD. 48"X48"

R56-1



STD. 18"X18"

W8-11



STD. 36"X36"
FWY. 48"X48"

W8-9



STD. 36"X36"
FWY. 48"X48"

G20-1



60"X24"

G20-2

48"X24"

OM-3L OM-3R

12"X36"

M4-9

STD. 30"X24"
SPECIAL 48"X36"
SPECIAL 60"X48"

M4-10

48"X18"

R55-1

36"X60"

• USE 6" C LETTERS
•• USE 4" D LETTERS

ADVANCE DISTANCES
(XXXX)

500 FT	1/2 MILE
1000 FT	3/4 MILE
1500 FT	1 MILE AHEAD

GENERAL NOTES:

1. ALL TRAFFIC CONTROL DEVICES USED ON ROAD CONSTRUCTION SHALL CONFORM TO THE MANUAL ON UNIFORM TRAFFIC CONTROL DEVICES, LATEST EDITION, AND TO THE STANDARD HIGHWAY SIGNS, LATEST EDITION, OR AS APPROVED BY THE FEDERAL HIGHWAY ADMINISTRATION.
2. TRAFFIC CONTROL DEVICES SHALL BE SET UP JUST BEFORE THE START OF CONSTRUCTION OPERATIONS AND SHALL BE PROPERLY MAINTAINED DURING THE TIME SUCH CONDITIONS EXIST. THEY SHALL REMAIN IN PLACE ONLY AS LONG AS NEEDED AND REMOVED THEREAFTER.
3. EXISTING SIGNS AND CONSTRUCTION SIGNS SHALL BE KEPT IN PROPER POSITION, AND BE CLEAN AND LEGIBLE AT ALL TIMES. SIGNS THAT DO NOT APPLY TO EXISTING CONDITIONS SHALL BE REMOVED. SIGNS THAT ARE DAMAGED, DEFACED, OR THAT ACCUMULATE DIRT DURING CONSTRUCTION SHALL BE CLEANED, REPAIRED, OR REPLACED.
- 4. SIGNS ARE USUALLY MOUNTED ON A SINGLE POST, ALTHOUGH THOSE WIDER THAN 36" OR LARGER THAN 10 SQ. FT. SHALL BE MOUNTED ON TWO POSTS OR ABOVE A TYPE III BARRICADE.
- 5. SIGN POSTS DIRECT BURIED IN SOIL SHALL BE 2 LB. MINIMUM CHANNEL POST OR 4"x4" WOOD POSTS. CHANNEL POSTS SHALL BE PAINTED GREEN. WOOD POSTS SHALL BE PAINTED WHITE. ALL POSTS SHALL BE NEATLY CONSTRUCTED, AND SHALL BE REPLUMBED, CLEANED, OR REPAIRED AS NEEDED FOR THE DURATION OF THE JOB. THERE SHALL NOT BE MORE THAN 2 POSTS IN A 7' PATH FOR WOOD OR CHANNEL POSTS. ANY CHANNEL POST SPLICE SHALL BE IN ACCORDANCE WITH STANDARD DRAWING TC-3.
6. POST MOUNTED SIGNS IN RURAL AREAS SHALL BE CONSTRUCTED WITH THE NEAR EDGE OF THE SIGN FROM 6 TO 12 FEET FROM THE PAVEMENT EDGE. SIGNS IN URBAN AREAS AND BARRICADE MOUNTED SIGNS SHALL BE MOUNTED A MINIMUM OF 2 FEET FROM THE PAVEMENT EDGE.
7. ALL POST AND BARRICADE MOUNTED SIGNS MOUNTED IN URBAN AREAS SHALL BE MOUNTED A MINIMUM DISTANCE OF 7' FROM THE BOTTOM OF THE SIGN TO THE ROADWAY SURFACE. ALL POST AND BARRICADE MOUNTED SIGNS MOUNTED IN RURAL AREAS SHALL BE MOUNTED A MINIMUM DISTANCE OF 7' FROM THE BOTTOM OF THE SIGN TO THE ROADWAY SURFACE, EXCEPT A MINIMUM OF 6' SHALL BE USED WHEN MOUNTING AN ADVISORY SIGN BELOW A WARNING SIGN. TEMPORARY SIGNS MAY BE MOUNTED ON PORTABLE SUPPORTS FOR INTERMEDIATE TERM STATIONARY WORK CONDITIONS. THE SIGNS MINIMUM MOUNTING HEIGHT SHALL BE 5'. RETROREFLECTIVE DEVICES SHALL BE USED. TEMPORARY SIGNS MAY BE MOUNTED ON PORTABLE SUPPORTS FOR SHORT-TERM, SHORT DURATION, AND MOBILE CONDITIONS. THEY SHALL BE NO LESS THAN ONE (1) FOOT ABOVE THE TRAVELED WAY. LONG-TERM STATIONARY SIGNS SHALL BE DIRECT BURIED IN SOIL, UNLESS CONDITIONS NECESSITATE THE USE OF PORTABLE SIGNS, OR AS APPROVED BY THE ENGINEER. CONCRETE PADS, CONCRETE OR ROCK BALLAST, OR OTHER SOLID MATERIALS SHALL NOT BE UTILIZED WITH PORTABLE SIGN SUPPORTS.
8. FLAGGERS SHALL USE REFLECTORIZED STOP-SLOW PADDLES. FLAGS MAY BE USED ONLY FOR EMERGENCY SITUATIONS.
9. MOST OF THE SIGNS SHOWN ARE ORIENTED TO THE RIGHT. HOWEVER, THIS DOES NOT PRECLUDE THE USE OF MIRROR IMAGES OF THESE SIGNS WHERE THE REVERSE ORIENTATION MIGHT BETTER CONVEY TO MOTORISTS THE PROPER DIRECTION OF MOVEMENT.
10. R55-1 SIGNS SHALL BE PLACED AT LEAST 1500' BUT NOT MORE THAN 1 MILE IN ADVANCE OF THE WORK ZONE. IF A SPEED LIMIT REDUCTION IS IN EFFECT, THE SIGN SHALL BE PLACED A MINIMUM OF 500' IN ADVANCE OF THE "REDUCED SPEED AHEAD" SIGN.

• NOTE: SUPPORTS FOR SIGNS, BARRICADES, AND VERTICAL PANELS THAT ARE DIFFERENT FROM THE REQUIREMENTS SHOWN IN NOTES 4 & 5, BUT MEET THE REQUIREMENTS OF MANUAL FOR ASSESSING SAFETY HARDWARE (MASH), WILL BE ACCEPTED. COMPLIANCE WITH THE REQUIREMENTS OF MANUAL FOR ASSESSING SAFETY HARDWARE (MASH) IS REQUIRED FOR ALL PROJECTS.

DATE	REVISION	FILMED
11-07-19	REVISED FOR MASH	
4-13-17	DELETED RSP-1 & ADDED W21-5a	
9-2-15	REVISED REDUCED SPEED LIMIT AHEAD SIGNS REVISED ROAD WORK NEXT XX MILES	
12-15-11	REVISED W24-1	
11-17-10	DELETED W8-9a & ADDED W8-9	
10-15-09	ADDED REFERENCE TO MASH & ADDED SIGN W24-1	
4-17-08	REVISED SIGN DESIGNATIONS	
11-18-04	REVISED NOTES	
10-9-03	REVISED NOTE 1	
11-16-01	REVISED NOTE 7	
9-28-00	REVISED NOTE	
11-18-98	ADDED NOTE	
6-26-97	REVISED NOTE 5	
4-03-97	REVISED NOTE 5	
10-18-96	ADDED CONTROLLED ACCESS HWY. SIGN & TO NOTE 7	
10-12-95	ADDED R55-1	
6-8-95	REVISED TO CORRECT SIGN ILLUSTRATIONS	6-8-95
2-2-95	REVISED PER PART VI, MUTCD SEPT. 3, 1993	
8-15-91	DRAWN AND PLACED IN USE	

ARKANSAS STATE HIGHWAY COMMISSION

STANDARD TRAFFIC CONTROLS FOR HIGHWAY CONSTRUCTION

STANDARD DRAWING TC-1

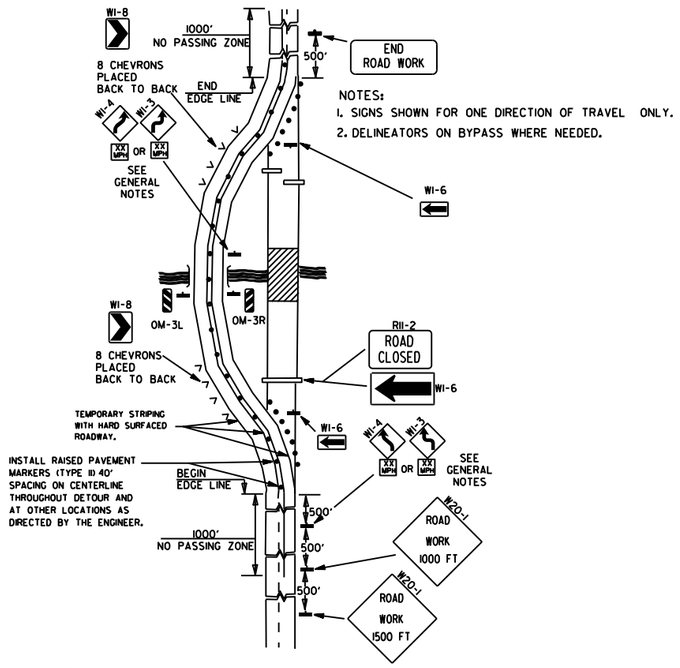

(A) TYPICAL APPLICATION OF TRAFFIC CONTROL DEVICES ON A 2-LANE HIGHWAY WHERE THE ENTIRE ROADWAY IS CLOSED AND A BYPASS DETOUR IS PROVIDED.

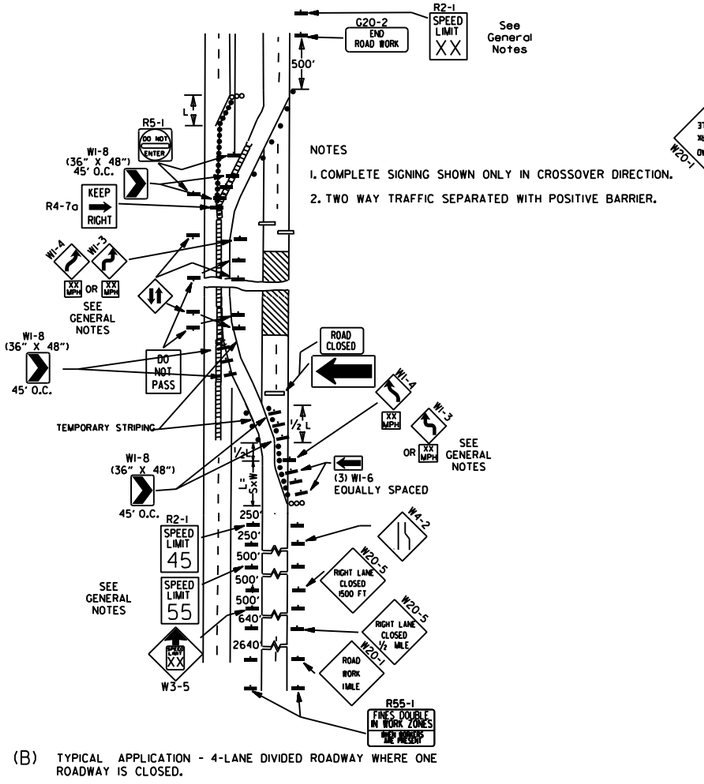

(B) TYPICAL APPLICATION - 4-LANE DIVIDED ROADWAY WHERE ONE ROADWAY IS CLOSED.

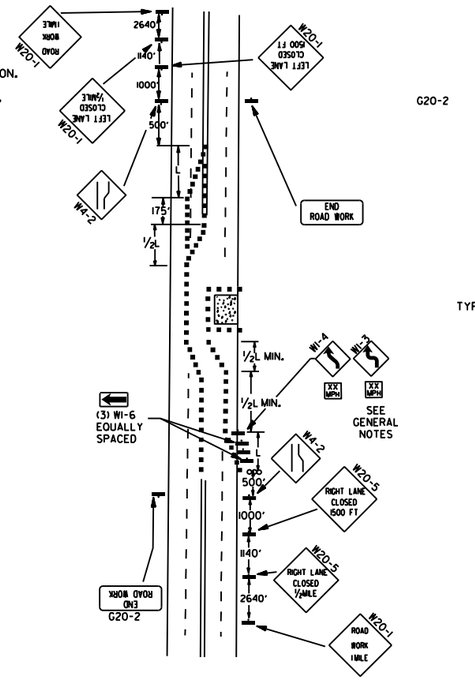

(C) TYPICAL APPLICATION - 4-LANE UNDIVIDED ROADWAY WHERE HALF OF THE ROADWAY IS CLOSED.

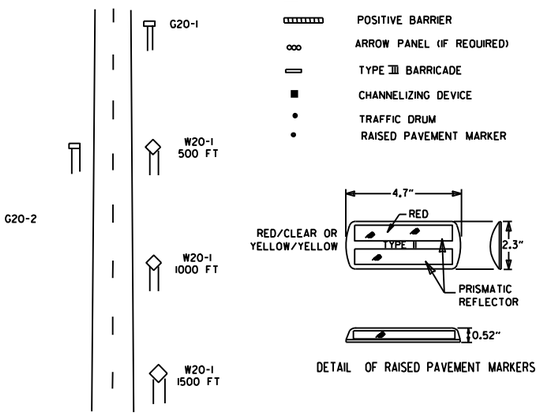

DETAIL OF RAISED PAVEMENT MARKERS

TYPICAL ADVANCE WARNING SIGN PLACEMENT

TAPER FORMULAE:

L=SXW FOR SPEEDS OF 45MPH OR MORE.

$L = \frac{WS^2}{60}$ FOR SPEEDS OF 40MPH OR LESS.

WHERE:

L= MINIMUM LENGTH OF TAPER.

S= NUMERICAL VALUE OF POSTED SPEED LIMIT PRIOR TO WORK OR 85TH PERCENTILE SPEED.

W= WIDTH OF OFFSET.

GENERAL NOTES:

1. THE MAINTENANCE DIVISION SHALL CONDUCT A BALL BANK STUDY TO DETERMINE THE ADVISORY SPEED LIMIT PRIOR TO OPENING TO TRAFFIC. THE ADVISORY SPEED WILL BE POSTED ON W1-3 OR W1-4 CURVE WARNING SIGNS. USE W1-4 WHEN SPEED IS GREATER THAN 30MPH AND W1-3 WHEN 30MPH OR LESS
2. WHEN THE EXISTING SPEED LIMIT IS 55MPH AND THE PLANS REQUIRE A SPEED LIMIT OF 45MPH, THE R2-1(55) SHALL BE OMITTED AND THE W3-5 SHALL BE INSTALLED AT THAT LOCATION. ADDITIONAL R2-1 45MPH SPEED LIMIT SIGNS SHALL BE INSTALLED AT A MAXIMUM OF 1MILE INTERVALS. AT THE END OF THE WORK AREA A R2-1(XX) SHALL BE INSTALLED TO MATCH ORIGINAL SPEED LIMIT.
3. WHEN THE EXISTING SPEED LIMIT IS 65MPH AND THE PLANS REQUIRE A SPEED LIMIT OF 55MPH, THE R2-1(45) SHALL BE OMITTED. ADDITIONAL R2-1 55MPH SPEED LIMIT SIGNS SHALL BE INSTALLED AT A MAXIMUM OF 1MILE INTERVALS. AT THE END OF THE WORK AREA A R2-1(XX) SHALL BE INSTALLED TO MATCH ORIGINAL SPEED LIMIT.
4. THE MAXIMUM SPACING BETWEEN CHANNELIZING DEVICES IN A TAPER SHOULD BE APPROXIMATELY EQUAL IN FEET TO THE SPEED LIMIT. BEYOND THE TAPER, MAXIMUM SPACING SHALL BE TWO TIMES THE SPEED LIMIT, OR AS DIRECTED BY THE ENGINEER.
5. WARNING LIGHTS AND/OR FLAGS MAY BE MOUNTED TO SIGNS OR CHANNELIZING DEVICES AT NIGHT AS NEEDED.
6. PAVEMENT MARKINGS NO LONGER APPLICABLE WHICH MIGHT CREATE CONFUSION IN THE MINDS OF VEHICLE OPERATORS SHALL BE REMOVED OR OBLITERATED AS SOON AS PRACTICABLE.
7. TRAILER MOUNTED DEVICES SUCH AS ARROW PANELS AND PORTABLE CHANGEABLE MESSAGE SIGNS SHALL BE DELINEATED BY AFFIXING CONSPICUITY MATERIAL IN A CONTINUOUS LINE ON THE FACE OF THE TRAILER. WHEN PLACED ON OR ADJACENT TO THE SHOULDER AND NOT BEHIND A POSITIVE BARRIER, THESE DEVICES SHALL BE DELINEATED BY PLACING FIVE (5) TRAFFIC DRUMS, EQUALLY SPACED ALONG THE TRAFFIC SIDE OF THE DEVICE. PAYMENT FOR TRAFFIC DRUMS SHALL BE CONSIDERED INCLUDED IN THE PRICE BID FOR VARIOUS TRAILER MOUNTED DEVICES.
8. DIMENSIONS SHOWN FOR RAISED PAVEMENT MARKERS ARE TYPICAL. THE CONTRACTOR MAY SUBSTITUTE SIMILAR MARKERS WITH THE APPROVAL OF THE ENGINEER. REQUESTING APPROVAL FOR SIMILAR MARKERS MAY BE MADE BY REFERRING TO THE ARDOT QUALIFIED PRODUCTS LIST.
9. ALL TRAILER MOUNTED DEVICES SUCH AS ARROW PANELS AND PORTABLE CHANGEABLE MESSAGE SIGNS SHALL MEET THE REQUIREMENTS OF THE MANUAL FOR ASSESSING SAFETY HARDWARE (MASH).

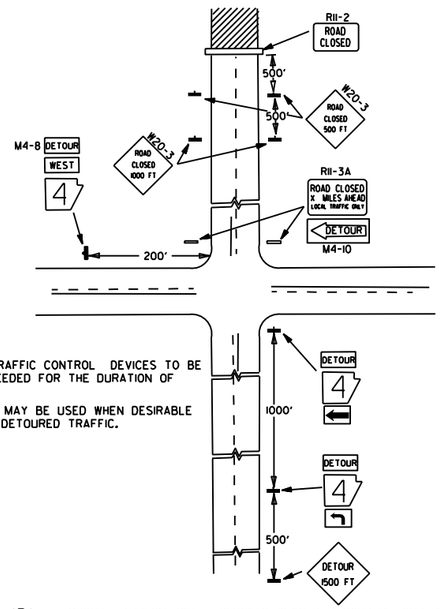

(D) TYPICAL APPLICATION - ROADWAY CLOSED BEYOND DETOUR POINT.

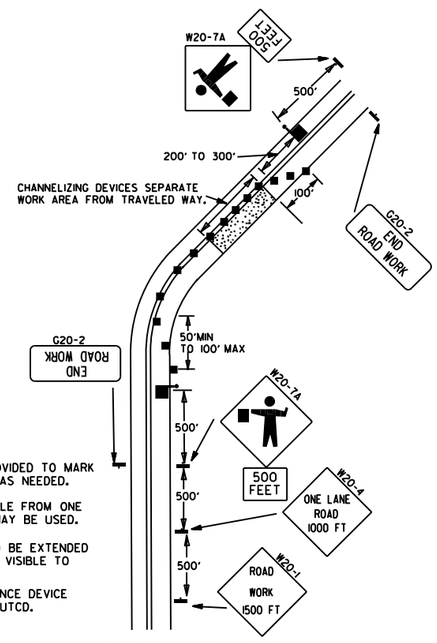

(E) TYPICAL APPLICATION OF TRAFFIC CONTROL DEVICES ON 2-LANE HIGHWAY WHERE ONE LANE IS CLOSED AND FLAGGING IS PROVIDED.

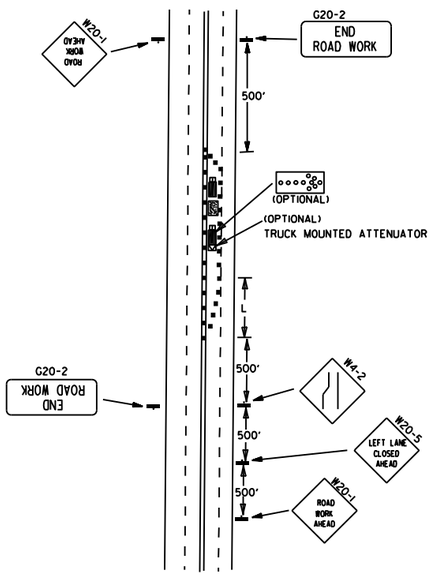

(F) TYPICAL APPLICATION - 4-LANE UNDIVIDED ROADWAY WITH INSIDE LANE CLOSED.

DATE	REVISION	FILMED
05-20-21	REVISED NOTE 7	
11-07-19	REVISED NOTE 1, ADDED NOTE 9	
9-2-15	REVISED NOTE 2, ADDED NOTE 8, REVISED DRAWING (A) & REPLACED R2-5A WITH W3-5	
9-12-13	REVISED DETAIL OF RAISED PAVEMENT MARKERS	
3-11-10	ADDED (AFAD)	
11-20-08	REVISED SIGN DESIGNATIONS	
11-18-04	ADDED GENERAL NOTE	
10-18-96	ADDED R55-1	
4-26-96	CORRECTED (a) BEHIND G20-2	
6-8-95	CORRECTED SIGN IDENT. ON W1-4A	6-8-95
2-2-95	REVISED PER PART VI, MUTCD, SEPT. 3, 1993	
8-15-91	DRAWN AND PLACED IN USE	

ARKANSAS STATE HIGHWAY COMMISSION

STANDARD TRAFFIC CONTROLS FOR HIGHWAY CONSTRUCTION

STANDARD DRAWING TC-2

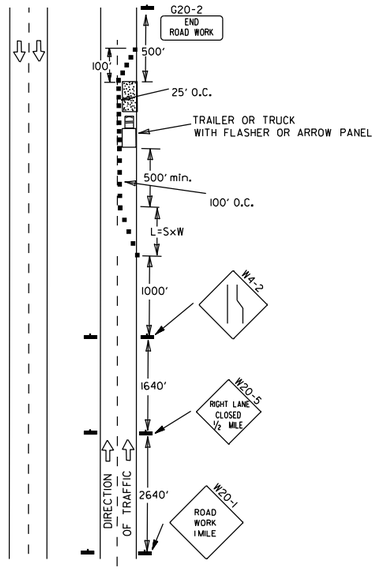

(A) TYPICAL APPLICATION - DAYTIME MAINTENANCE OPERATIONS OF SHORT DURATION ON A 4-LANE DIVIDED ROADWAY WHERE HALF OF THE ROADWAY IS CLOSED.

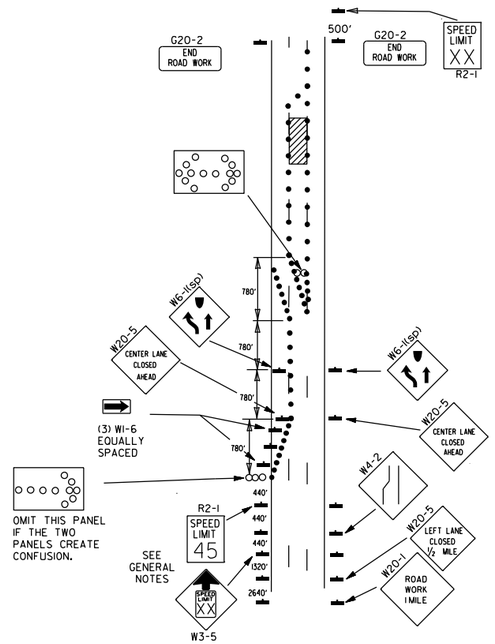

(B) TYPICAL APPLICATION - 3-LANE ONEWAY ROADWAY WHERE CENTER LANE IS CLOSED.

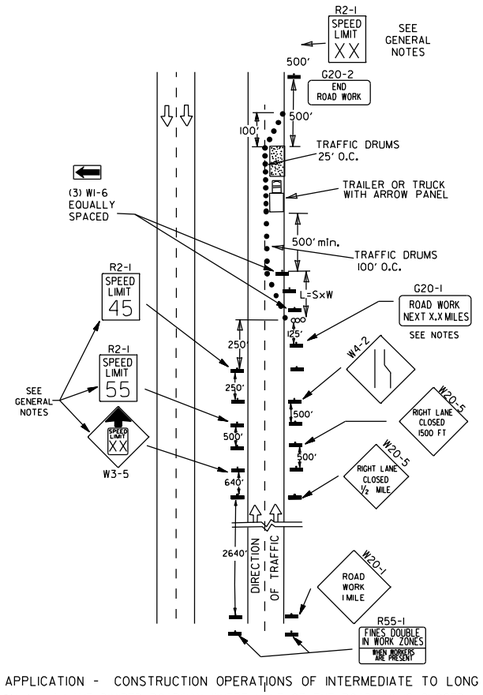

(C) TYPICAL APPLICATION - CONSTRUCTION OPERATIONS OF INTERMEDIATE TO LONG TERM DURATION ON A 4-LANE DIVIDED ROADWAY WHERE HALF OF THE ROADWAY IS CLOSED.

CHANNELIZING DEVICES



* WHEN CONES ARE USED ON FREEWAYS AND MULTI-LANE HIGHWAYS, THEY SHALL BE 28" MIN. DURING HOURS OF DARKNESS, 28" CONES SHALL BE USED ON ALL ROADWAYS, AND SHALL BE REFLECTORIZED IN ACCORDANCE WITH THE M.U.T.C.D.

CONES

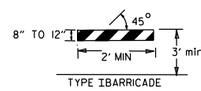

PLASTIC DRUM

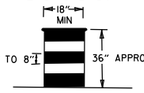

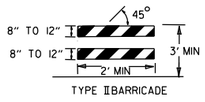

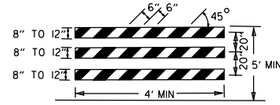

NOTE:
FOR ALL ROAD CLOSURES, THE TYPE III BARRICADES SHALL BE OF SUFFICIENT LENGTH TO EXTEND ACROSS ENTIRE ROADWAY.

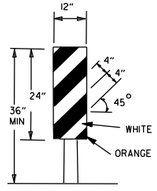

VERTICAL PANEL PLACEMENT

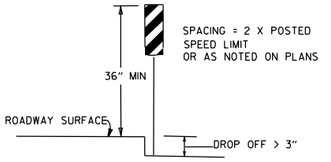

FLAG

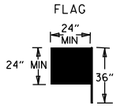

FLAG SHALL BE OF GOOD GRADE RED MATERIAL

KEY:

ooo ARROW PANEL (IF REQUIRED)

■ CHANNELIZING DEVICE

● TRAFFIC DRUM

GENERAL NOTES:

1. A SPEED LIMIT REDUCTION MAY BE IMPLEMENTED ONLY WHEN DESIGNATED IN THE PLAN OR WHEN RECOMMENDED BY THE ROADWAY DESIGN DIVISION.
2. WHEN THE EXISTING SPEED LIMIT IS 55MPH AND THE PLANS REQUIRE A SPEED LIMIT OF 45MPH, THE R2-1(55) SHALL BE OMITTED AND THE W3-5 SHALL BE INSTALLED AT THAT LOCATION. ADDITIONAL R2-1 45MPH SPEED LIMIT SIGNS SHALL BE INSTALLED AT A MAXIMUM OF 1 MILE INTERVALS. AT THE END OF THE WORK AREA A R2-1(XX) SHALL BE INSTALLED TO MATCH ORIGINAL SPEED LIMIT.
3. WHEN THE EXISTING SPEED LIMIT IS 65MPH AND THE PLANS REQUIRE A SPEED LIMIT OF 55MPH, THE R2-1(45) SHALL BE OMITTED. ADDITIONAL R2-1 55MPH SPEED LIMIT SIGNS SHALL BE INSTALLED AT A MAXIMUM OF 1 MILE INTERVALS. AT THE END OF THE WORK AREA A R2-1(XX) SHALL BE INSTALLED TO MATCH ORIGINAL SPEED LIMIT.
4. THE MAXIMUM SPACING BETWEEN CHANNELIZING DEVICES IN A TAPER SHOULD BE APPROXIMATELY EQUAL IN FEET TO THE SPEED LIMIT. BEYOND THE TAPER, MAXIMUM SPACING SHALL BE TWO TIMES THE SPEED LIMIT OR AS DIRECTED BY THE ENGINEER.
5. WARNING LIGHTS AND/OR FLAGS MAY BE MOUNTED TO SIGNS OR CHANNELIZING DEVICES AT NIGHT AS NEEDED.
6. PAVEMENT MARKINGS NO LONGER APPLICABLE WHICH MIGHT CREATE CONFUSION IN THE MINDS OF VEHICLE OPERATORS SHALL BE REMOVED OR OBLITERATED AS SOON AS PRACTICABLE.
7. THE G20-1 SIGN WILL BE REQUIRED ON JOBS OF OVER TWO MILES IN LENGTH. WHEN THE LANE CLOSURE IS NOT AT THE BEGINNING OF THE PROJECT, THE G20-1 SIGN SHALL BE ERECTED 125' IN ADVANCE OF THE JOB LIMIT. ADDITIONAL W20-1 (1 MILE) SIGNS ARE NOT REQUIRED IN ADVANCE OF LANE CLOSURES THAT BEGIN INSIDE THE PROJECT LIMITS.
8. FLAGGERS SHALL USE STOP/SLOW PADDLES FOR CONTROLLING TRAFFIC THROUGH WORK ZONES. FLAGS MAY BE USED ONLY FOR EMERGENCY SITUATIONS.
9. ALL PLASTIC DRUMS AND CONES SHALL MEET THE REQUIREMENTS OF MANUAL FOR ASSESSING SAFETY HARDWARE (MASH).
10. TRAILER MOUNTED DEVICES SUCH AS ARROW PANELS AND PORTABLE CHANGEABLE MESSAGE SIGNS SHALL BE DELINEATED BY AFFIXING CONSPICUITY MATERIAL IN A CONTINUOUS LINE ON THE FACE OF THE TRAILER. WHEN PLACED ON OR ADJACENT TO THE SHOULDER AND NOT BEHIND A POSITIVE BARRIER, THESE DEVICES SHALL BE DELINEATED BY PLACING FIVE (5) TRAFFIC DRUMS, EQUALLY SPACED ALONG THE TRAFFIC SIDE OF THE DEVICE. PAYMENT FOR TRAFFIC DRUMS SHALL BE CONSIDERED INCLUDED IN THE PRICE BID FOR VARIOUS TRAILER MOUNTED DEVICES.
11. ALL TRAILER MOUNTED DEVICES SUCH AS ARROW PANELS AND PORTABLE CHANGEABLE MESSAGE SIGNS SHALL MEET THE REQUIREMENTS OF THE MANUAL FOR ASSESSING SAFETY HARDWARE (MASH).

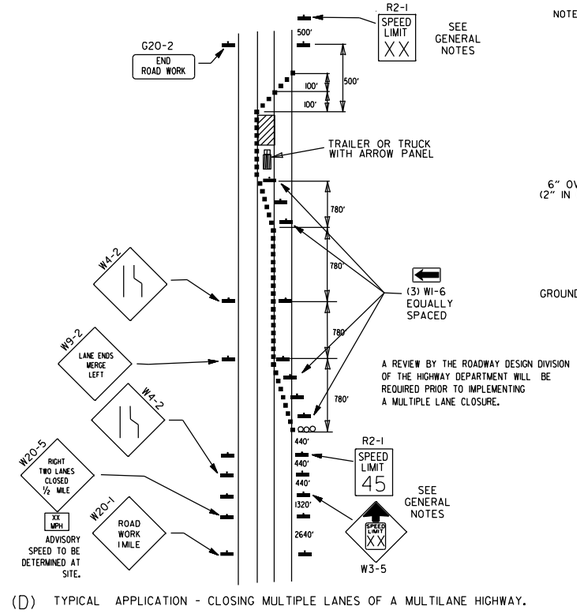

A REVIEW BY THE ROADWAY DESIGN DIVISION OF THE HIGHWAY DEPARTMENT WILL BE REQUIRED PRIOR TO IMPLEMENTING A MULTIPLE LANE CLOSURE.

(D) TYPICAL APPLICATION - CLOSING MULTIPLE LANES OF A MULTILANE HIGHWAY.

TRAFFIC CONTROL DEVICES

NON-INTERSTATE

VERTICAL DIFFERENTIAL	LOCATION	TRAFFIC CONTROL	
		≤ 45 MPH	> 45 MPH
≤ 1"	CENTERLINE	W8-11	W8-11
> 1" ≤ 3"	CENTERLINE	W8-11 AND CENTERLINE LANE STRIPING	W8-11 AND CENTERLINE LANE STRIPING
> 3"	CENTERLINE	STANDARD LANE CLOSURE[6]	STANDARD LANE CLOSURE[6]
≤ 3"	EDGE OF TRAVELED LANE OR EDGE OF SHOULDER	W8-9 AND TRAFFIC DRUMS[1]	W8-9 AND TRAFFIC DRUMS[1]
> 3" ≤ 6"	EDGE OF TRAVELED LANE OR EDGE OF SHOULDER	W8-17, EDGE LINE STRIPING, AND TRAFFIC DRUMS[1]	W8-17, EDGE LINE STRIPING, AND TRAFFIC DRUMS[1]
> 6" ≤ 18"	EDGE OF TRAVELED LANE OR EDGE OF SHOULDER	W8-17, EDGE LINE STRIPING, AND TRAFFIC DRUMS[1]	W8-17, EDGE LINE STRIPING, AND TRAFFIC DRUMS[2]
> 18" ≤ 24"	EDGE OF TRAVELED LANE OR EDGE OF SHOULDER	W8-17, EDGE LINE STRIPING, AND TRAFFIC DRUMS[1]	A STABILIZED WEDGE, W8-17, EDGE LINE STRIPING AND TRAFFIC DRUMS[3]
> 24"	EDGE OF TRAVELED LANE OR EDGE OF SHOULDER	PRECAST CONCRETE BARRIER[4] & EDGE LINES	PRECAST CONCRETE BARRIER[4] & EDGE LINES

INTERSTATE

VERTICAL DIFFERENTIAL	LOCATION	TRAFFIC CONTROL
≤ 3"	CENTERLINE	W8-11 AND LANE STRIPING
≤ 3"	EDGE OF TRAVELED LANE OR EDGE OF SHOULDER	W8-9, EDGE LINE STRIPING, AND TRAFFIC DRUMS[2]
> 3" ≤ 6"	EDGE OF TRAVELED LANE OR EDGE OF SHOULDER	W8-17, EDGE LINE STRIPING, AND TRAFFIC DRUMS[2]
> 6"	EDGE OF TRAVELED LANE OR EDGE OF SHOULDER	PRECAST CONCRETE BARRIER & EDGE LINES

INTERSTATE AND NON-INTERSTATE

FORESLOPE	HEIGHT	TRAFFIC CONTROL
1:1	> 2 FT	PRECAST CONCRETE BARRIER
2:1	≤ 5 FT	TRAFFIC DRUMS
2:1	> 5 FT	PRECAST CONCRETE BARRIER
Flatter than 2:1	N/A	TRAFFIC DRUMS

GENERAL NOTES:

1. WHEN THE SHOULDER AREA IS USED AS PART OF THE TRAVELED LANE AND THERE IS INSUFFICIENT WIDTH TO PLACE TRAFFIC DRUMS ON THE REMAINING SHOULDER WIDTH, THEN VERTICAL PANELS SHALL BE USED.
2. WHEN THERE IS INSUFFICIENT WIDTH TO PLACE TRAFFIC DRUMS ON THE REMAINING SHOULDER WIDTH, A STABILIZED WEDGE SHALL BE USED.
3. PRECAST CONCRETE BARRIER WALL CAN BE USED IN LIEU OF A STABILIZED WEDGE, W8-17 SIGN, EDGE LINE STRIPING, AND TRAFFIC DRUMS, IF AND WHERE DIRECTED BY THE ENGINEER.
4. A STABILIZED WEDGE, W8-17 SIGN, EDGE LINE STRIPING, AND TRAFFIC DRUMS CAN BE USED IN LIEU OF PRECAST CONCRETE BARRIER WALL, IF AND WHERE DIRECTED BY THE ENGINEER.
5. W21-5, W21-5a, AND/OR W21-5b SIGNS SHALL BE USED WHERE THE ROADWAY IS UNOBSTRUCTED IF AND WHERE DIRECTED BY THE ENGINEER.
6. TIME LIMITATIONS MUST CONFORM TO SECTION 603 OF THE STANDARD SPECIFICATIONS FOR HIGHWAY CONSTRUCTION (CURRENT EDITION).

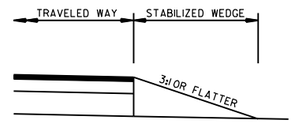

STABILIZED WEDGE

NOTE:
MATERIALS FOR THE STABILIZED WEDGE SHALL MEET THE REQUIREMENTS PROVIDED IN SECTION 603.02 OF THE STANDARD SPECIFICATIONS.

STOP SLOW PADDLE

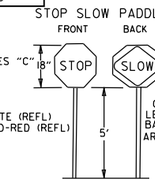

NOTES: USE SPLICES ONLY WHEN NECESSARY FOR INSTALLATION. TYPICAL INSTALLATION SHOULD HAVE NO SPLICES (SEE STD. DRAWING NO. SHS-2)

NORMAL INSTALLATIONS WILL REQUIRE 1/4" DIA. BOLTS TO MOUNT SIGNS TO POST AND 5/16" DIA. BOLTS TO ASSEMBLE THE VARIOUS POST SUPPORTS. EACH OF THESE BOLTS SHALL BE CARRIAGE BOLTS.

SIGN POSTS SHALL BE PAINTED GREEN; SIGNS SHALL NOT BE PAINTED, AND ALL SIGN POSTS SHALL BE PLUMB.

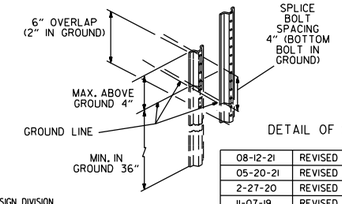

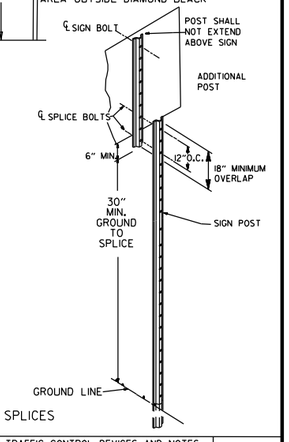

DETAIL OF SPLICES

DATE	REVISION	FILMED
08-12-21	REVISED TRAFFIC CONTROL DEVICES AND NOTES	
05-20-21	REVISED NOTE 10	
2-27-20	REVISED TRAFFIC CONTROL DEVICES DETAILS	
11-07-19	REVISED NOTE 9, ADDED NOTE 11	
7-25-19	REVISED TRAFFIC CONTROL DEVICES DETAILS	
9-2-15	REVISED NOTE 2 & REPLACED R2-5A WITH W3-5	
10-15-09	ADDED REFERENCE TO MASH	
11-20-08	REVISED SIGN DESIGNATIONS	
11-18-04	ADDED NOTE	
10-1-98	ADDED NOTE	
4-03-97	ADDED (SP) TO W6-1& REVISED TRAFFIC CONTROL DEVICES NOTE	
10-18-96	ADDED R55-1	
10-12-95	MOVED UPPER SPLICE	
6-8-95	REVISED SPLICE DETAIL, TEXT	6-8-95
2-2-95	REVISED PER PART VI, MUTCD, SEPT. 3, 1993	
8-15-91	DRAWN AND PLACED IN USE	

ARKANSAS STATE HIGHWAY COMMISSION

STANDARD TRAFFIC CONTROLS FOR HIGHWAY CONSTRUCTION

STANDARD DRAWING TC-3

GENERAL NOTES

INSTALL A MINIMUM OF 2 UPSLOPE STAKES AND 4 DOWNSLOPE STAKES AT AN ANGLE TO WEDGE WATTLE TO BOTTOM OF DITCH.

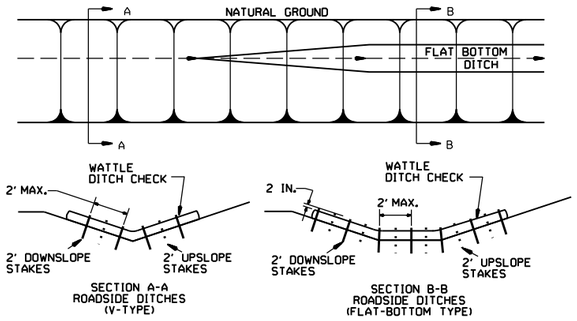

WATTLE DITCH CHECK (E-1)

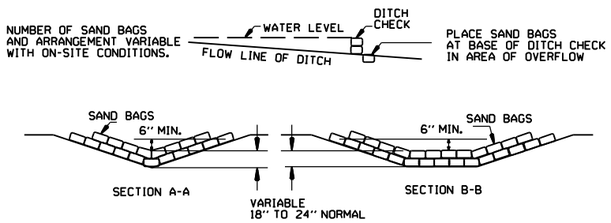

SAND BAG DITCH CHECK (E-5)

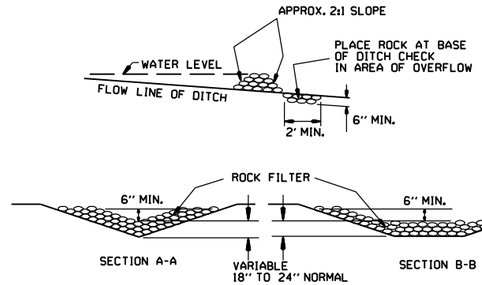

ROCK DITCH CHECK (E-6)

GENERAL NOTES

GEOTEXTILE FABRIC (TYPE 4) IN ACCORDANCE WITH SECTION 625

GEOTEXTILE FABRIC SHALL BE SPLICED TOGETHER WITH A SEWN SEAM ONLY AT A SUPPORT POST OR TWO SECTIONS OF FENCE MAY BE OVERLAPPED INSTEAD. PAYMENT OF ADDITIONAL MATERIAL FOR OVERLAP WILL NOT BE MADE.

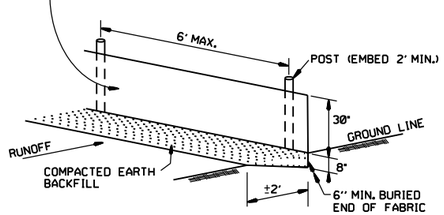

SILT FENCE (E-11)

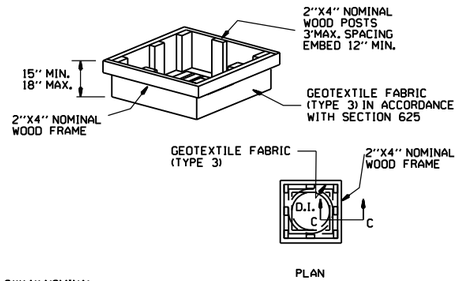

DROP INLET SILT FENCE (E-7)

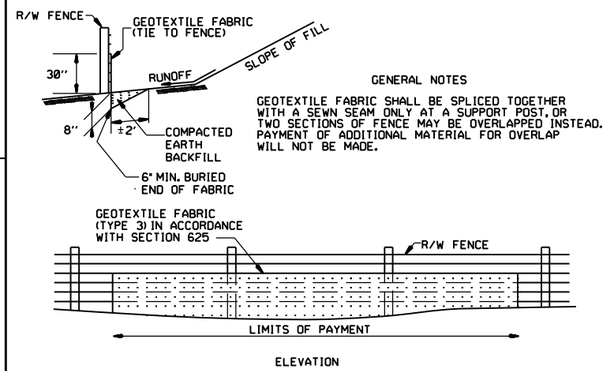

GENERAL NOTES

GEOTEXTILE FABRIC SHALL BE SPLICED TOGETHER WITH A SEWN SEAM ONLY AT A SUPPORT POST, OR TWO SECTIONS OF FENCE MAY BE OVERLAPPED INSTEAD. PAYMENT OF ADDITIONAL MATERIAL FOR OVERLAP WILL NOT BE MADE.

SILT FENCE ON R/W FENCE (E-4)

GENERAL NOTES

1. STRAW BALES SHALL BE INSTALLED SO THAT THE BINDINGS ARE ORIENTED AROUND THE SIDES RATHER THAN ALONG THE TOPS AND BOTTOMS OF THE BALES. THE BALES SHALL BE A MINIMUM OF 30 INCHES IN LENGTH.

2. NO GAPS SHALL BE LEFT BETWEEN BALES.

3. BALED STRAW FILTER BARRIERS COMPLETED AND ACCEPTED WILL BE MEASURED BY THE BALE IN PLACE AS AUTHORIZED BY THE ENGINEER AND WILL BE PAID FOR AT THE CONTRACT UNIT PRICE BID PER BALE FOR BALED STRAW DITCH CHECKS.

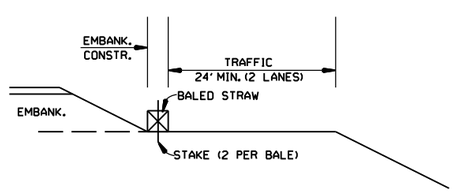

BALED STRAW FILTER BARRIER (E-2)

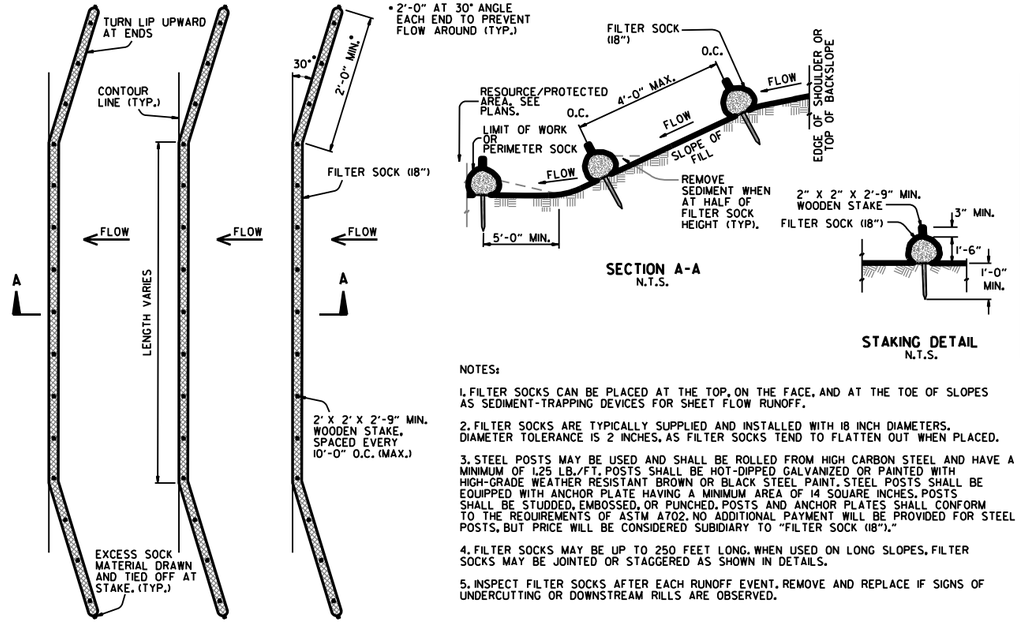

NOTES:

1. FILTER SOCKS CAN BE PLACED AT THE TOP, ON THE FACE, AND AT THE TOE OF SLOPES AS SEDIMENT-TRAPPING DEVICES FOR SHEET FLOW RUNOFF.

2. FILTER SOCKS ARE TYPICALLY SUPPLIED AND INSTALLED WITH 18 INCH DIAMETERS. DIAMETER TOLERANCE IS 2 INCHES. AS FILTER SOCKS TEND TO FLATTEN OUT WHEN PLACED.

3. STEEL POSTS MAY BE USED AND SHALL BE ROLLED FROM HIGH CARBON STEEL AND HAVE A MINIMUM OF 1.25 LB./FT. POSTS SHALL BE HOT-DIPPED GALVANIZED OR PAINTED WITH HIGH-GRADE WEATHER RESISTANT BROWN OR BLACK STEEL PAINT. STEEL POSTS SHALL BE EQUIPPED WITH ANCHOR PLATE HAVING A MINIMUM AREA OF 14 SQUARE INCHES. POSTS SHALL BE STUDDED, EMBOSSED, OR PUNCHED. POSTS AND ANCHOR PLATES SHALL CONFORM TO THE REQUIREMENTS OF ASTM A702. NO ADDITIONAL PAYMENT WILL BE PROVIDED FOR STEEL POSTS, BUT PRICE WILL BE CONSIDERED SUBIDIARY TO "FILTER SOCK (18")."

4. FILTER SOCKS MAY BE UP TO 250 FEET LONG. WHEN USED ON LONG SLOPES, FILTER SOCKS MAY BE JOINTED OR STAGGERED AS SHOWN IN DETAILS.

5. INSPECT FILTER SOCKS AFTER EACH RUNOFF EVENT. REMOVE AND REPLACE IF SIGNS OF UNDERCUTTING OR DOWNSTREAM RILLS ARE OBSERVED.

FILTER SOCK ALONG SLOPE (E-3)

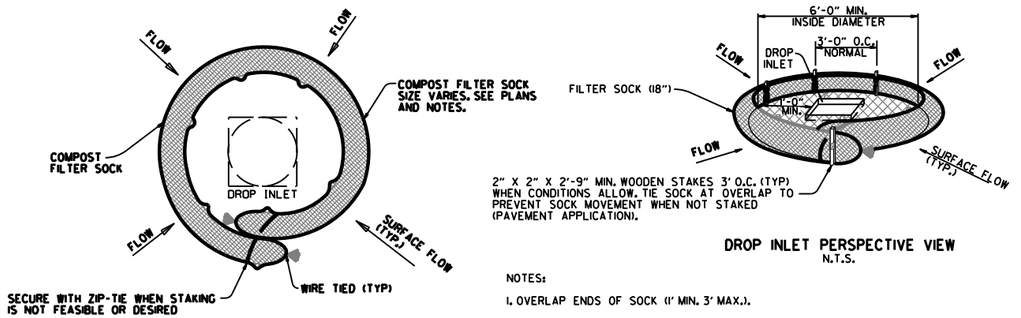

NOTES:

1. OVERLAP ENDS OF SOCK (1' MIN. 3' MAX.).

2. USE 18" DIA. SOCK IN NON-TRAFFIC AREAS OR AREAS WHERE SAFETY IS NOT A CONCERN.

COMPOST FILTER SOCK DROP INLET PROTECTION (E-13)

DATE	REVISION	FILMED
11-16-17	ADDED FILTER SOCK E-3 AND E-13	
12-15-11	DELETED BALED STRAW DITCH CHECK & ADDED WATTLE DITCH CHECK	
11-18-98	ADDED NOTES	
07-02-98	ADDED BALED STRAW FILTER BARRIER (E-2)	
07-20-95	REVISED SILT FENCE E-4 AND E-11	7-20-95
07-15-94	REV. E-4 & E-11 MIN. 13" BURIED END OF FABRIC	
06-02-94	REVISED E-1,4,7 & 11; DELETED E-2 & 3	6-2-94
04-01-93	REDRAWN	
10-01-92	REDRAWN	
08-02-76	ISSUED R.D.M.	298-7-28-76

ARKANSAS STATE HIGHWAY COMMISSION

TEMPORARY EROSION CONTROL DEVICES

STANDARD DRAWING TEC-1

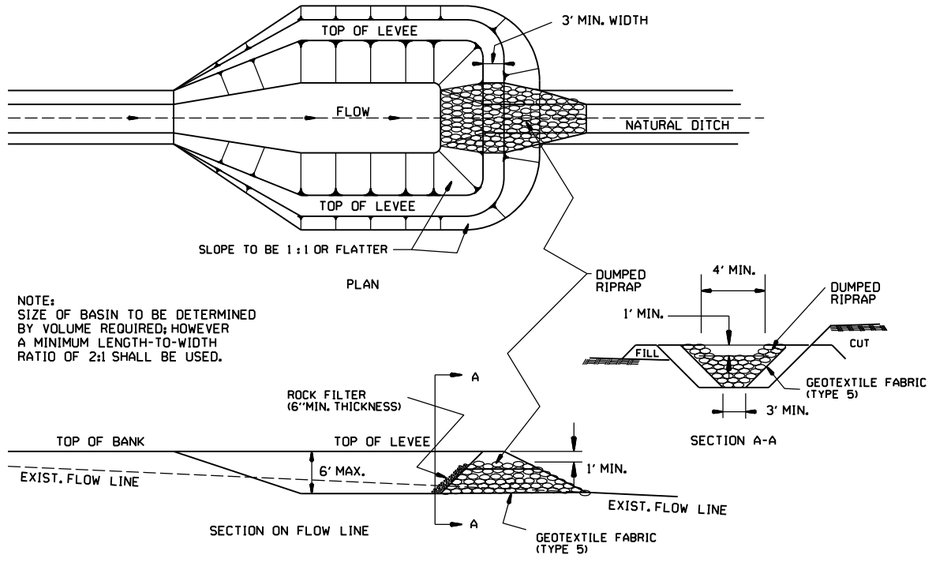

SEDIMENT BASIN WITH RIPRAP OUTLET (E-9)

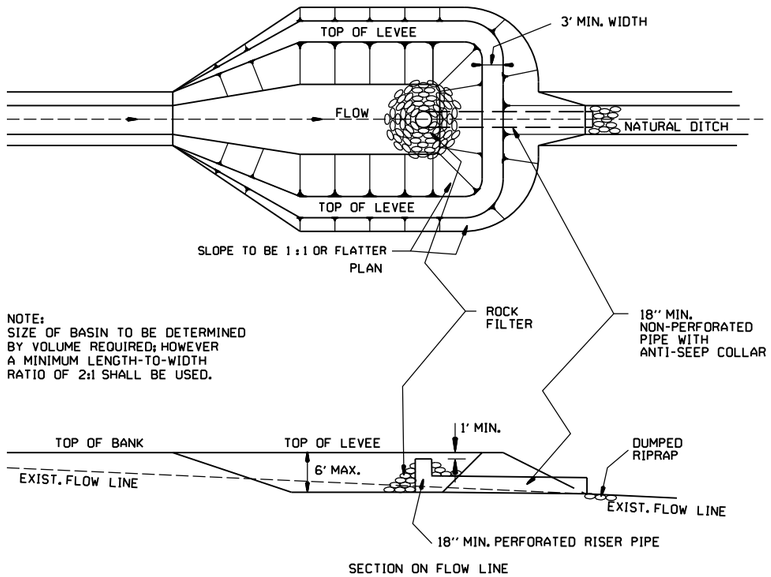

SEDIMENT BASIN WITH PIPE OUTLET (E-10)

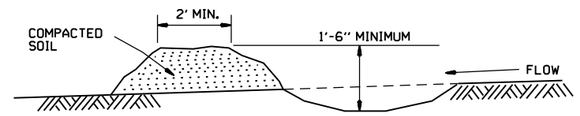

DIVERSION DITCH (E-8)

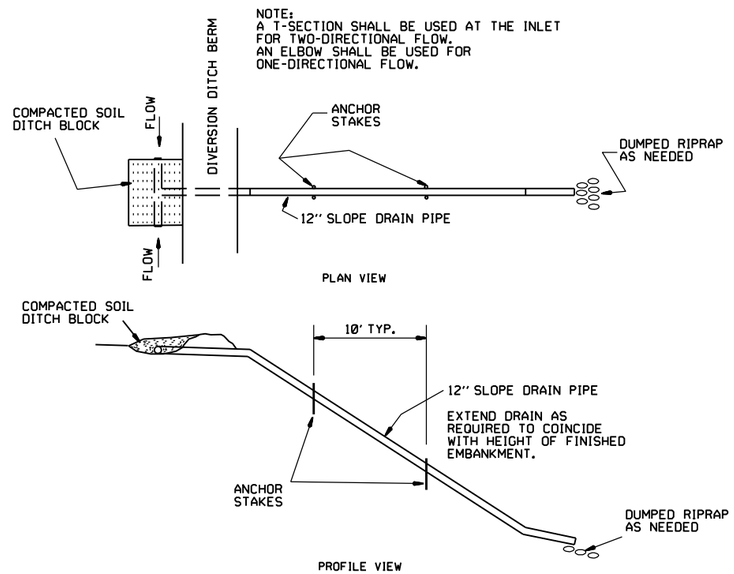

SLOPE DRAIN (E-12)

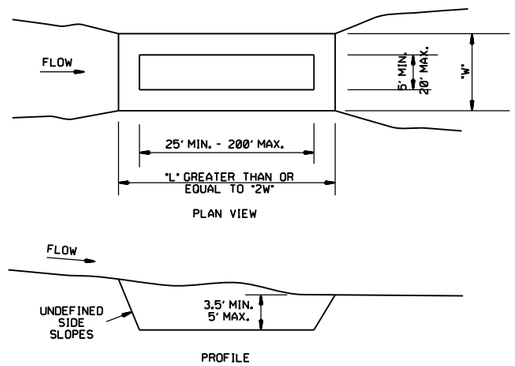

SEDIMENT BASIN (E-14)

DATE	REVISION	FILMED
6-2-94	Revised E-8 & E-12; Added E-14 & Deleted E-13	
4-1-93	ISSUED	

ARKANSAS STATE HIGHWAY COMMISSION

TEMPORARY EROSION CONTROL DEVICES

STANDARD DRAWING TEC-2

CLEARING AND GRUBBING

CONSTRUCTION SEQUENCE

1. PLACE PERIMETER CONTROLS (I.E. SILT FENCES , DIVERSION DITCHES, SEDIMENT BASINS, ETC.)
2. PERFORM CLEARING AND GRUBBING OPERATION.

EXCAVATION

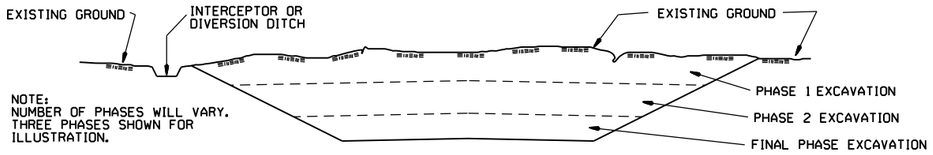

GENERAL NOTE

ALL CUT SLOPES SHALL BE DRESSED, PREPARED, SEEDED, AND MULCHED AS THE WORK PROGRESSES. SLOPES SHALL BE EXCAVATED AND STABILIZED IN EQUAL INCREMENTS NOT TO EXCEED 25 FEET, MEASURED VERTICALLY.

CONSTRUCTION SEQUENCE

1. EXCAVATE AND STABILIZE INTERCEPTOR AND/OR DIVERSION DITCHES.
2. PERFORM PHASE 1 EXCAVATION. PLACE PERMANENT OR TEMPORARY SEEDING.
3. PERFORM PHASE 2 EXCAVATION. PLACE PERMANENT OR TEMPORARY SEEDING.
4. PERFORM FINAL PHASE OF EXCAVATION. PLACE PERMANENT OR TEMPORARY SEEDING. STABILIZE DITCHES. CONSTRUCT DITCH CHECKS, DIVERSION DITCHES, SEDIMENT BASINS, OR OTHER EROSION CONTROL DEVICES AS REQUIRED.

EMBANKMENT

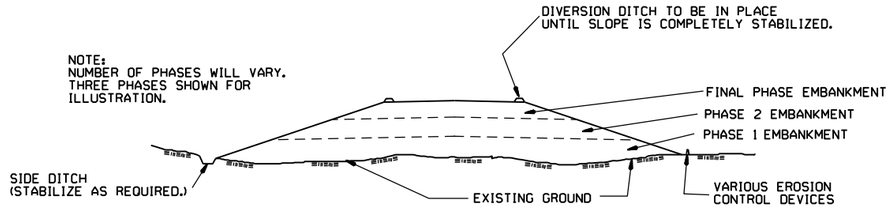

GENERAL NOTE

ALL EMBANKMENT SLOPES SHALL BE DRESSED, PREPARED, SEEDED, AND MULCHED AS THE WORK PROGRESSES. SLOPES SHALL BE CONSTRUCTED AND STABILIZED IN EQUAL INCREMENTS NOT TO EXCEED 25 FEET, MEASURED VERTICALLY.

CONSTRUCTION SEQUENCE

1. CONSTRUCT DIVERSION DITCHES, DITCH CHECKS, SEDIMENT BASINS, SILT FENCES, OR OTHER EROSION CONTROL DEVICES AS SPECIFIED.
2. PLACE PHASE 1 EMBANKMENT WITH PERMANENT OR TEMPORARY SEEDING. PROVIDE DIVERSION DITCHES AND SLOPE DRAINS IF EMBANKMENT CONSTRUCTION IS TO BE TEMPORARILY ABANDONED FOR A PERIOD OF GREATER THAN 21 DAYS.
3. PLACE PHASE 2 EMBANKMENT WITH PERMANENT OR TEMPORARY SEEDING. PROVIDE DIVERSION DITCHES AND SLOPE DRAINS IF EMBANKMENT CONSTRUCTION IS TO BE TEMPORARILY ABANDONED FOR A PERIOD OF GREATER THAN 21 DAYS.
4. PLACE FINAL PHASE OF EMBANKMENT WITH PERMANENT OR TEMPORARY SEEDING. PLACE DIVERSION DITCHES AND SLOPE DRAINS AND MAINTAIN UNTIL ENTIRE SLOPE IS STABILIZED.

DATE	REVISION	FILMED
11-03-94	CORRECTED SPELLING	
6-2-94	Drawn & Issued	6-2-94

ARKANSAS STATE HIGHWAY COMMISSION

TEMPORARY EROSION CONTROL DEVICES

STANDARD DRAWING TEC-3

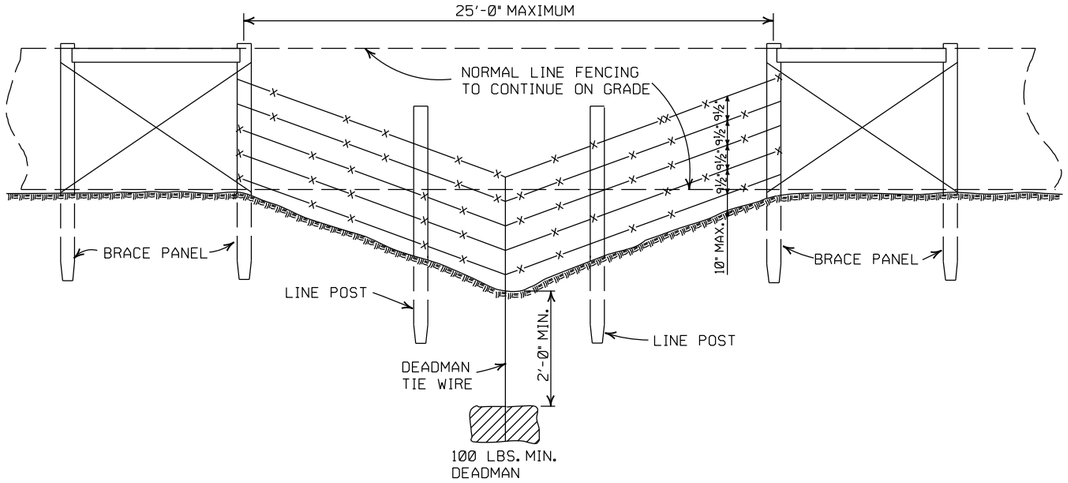

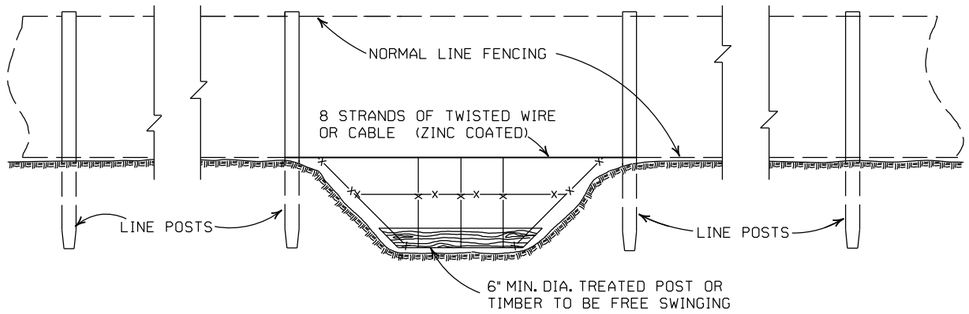

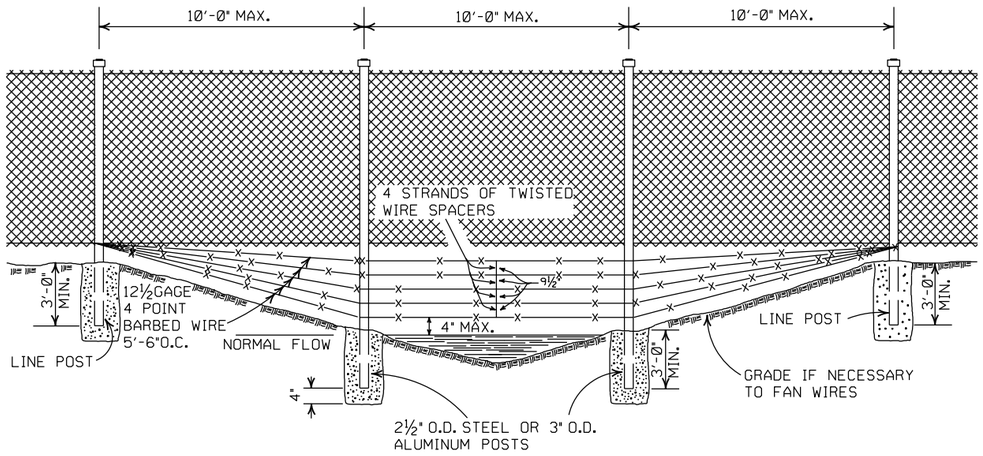

GENERAL NOTES:

THESE INSTALLATIONS TO BE USED WHERE NORMAL FENCING INSTALLATION WOULD CAUSE THE COLLECTING OF DRIFT IN THE CHANNEL OR THE DEPRESSION WILL NOT PERMIT NORMAL INSTALLATION. INSTALLATIONS WILL BE MADE ONLY WHERE DIRECTED BY THE ENGINEER.

WHEN A FENCE LINE APPROACHES A DITCH, GULLY OR DEPRESSION, THE LAST POST ON LEVEL GROUND SHALL BE PLACED CLOSE ENOUGH TO THE EDGE OF THE DROP OFF THAT THE FENCE MAY BE STRUNG TO THE POST IN THE DEPRESSION WITHOUT TOUCHING THE GROUND.

IN TERRAIN OF SUCH EXTREME IRREGULARITY THAT MINOR GRADING WILL NOT BE FEASIBLE, THE NORMAL FENCE SHALL CONTINUE ON GRADE AND THE GULLIES OR DEPRESSIONS TREATED BY AUXILIARY FENCES AS SHOWN.

PAYMENT FOR THE TYPE INSTALLATION USED WILL NOT BE MADE DIRECTLY BUT WILL BE INCLUDED IN THE CONTRACT UNIT PRICE BID FOR WIRE FENCE OR CHAIN LINK FENCE.

DATE	REVISION	FILMED
4-20-79	REVISED TOP RAIL & TENSION WIRE	696-4-20-79
10-2-72	REVISED AND REDRAWN	529-10-2-72

ARKANSAS STATE HIGHWAY COMMISSION

WIRE FENCE WATER GAPS

STANDARD DRAWING WF-2

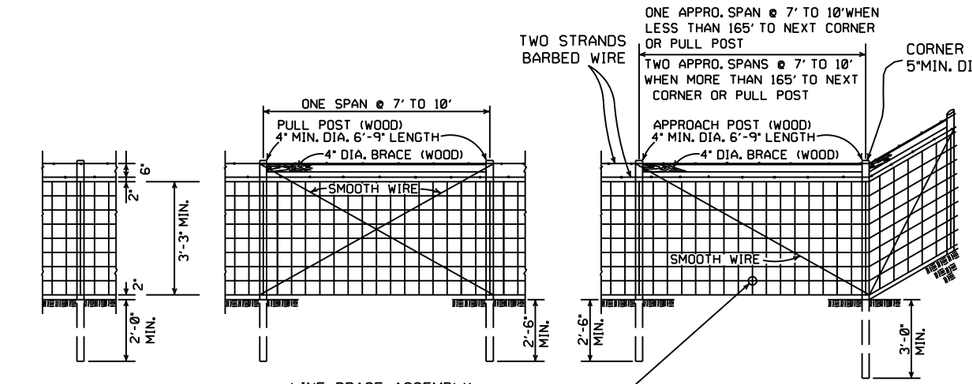

LINE BRACE ASSEMBLY
MAX. SPACING TO BE 330'

LINE POST
3" MIN. DIA. 6'-3" LENGTH
MAX. SPACING TO BE 10'-0"

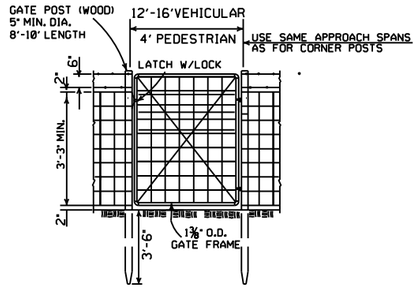

TYPE C FENCE (WOOD POSTS)

OTHER APPROVED TIES WILL BE PERMITTED

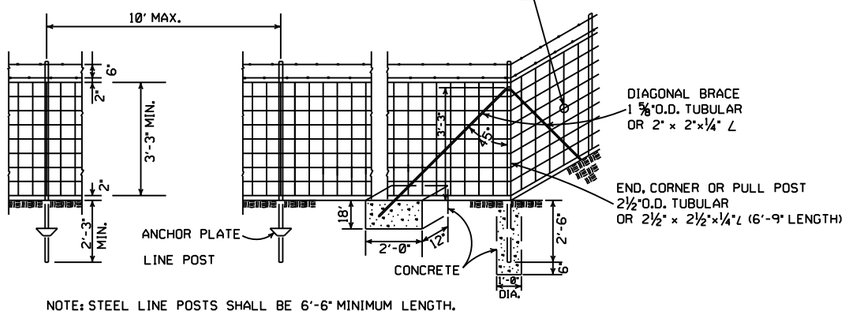

NOTE: STEEL LINE POSTS SHALL BE 6'-6" MINIMUM LENGTH.

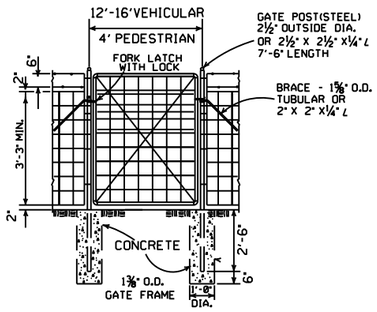

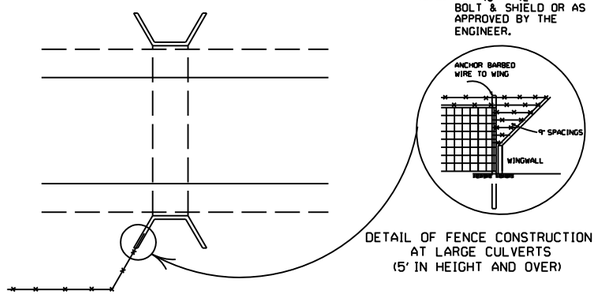

DETAIL OF FENCE CONSTRUCTION AT LARGE CULVERTS (5' IN HEIGHT AND OVER)

GENERAL NOTES:

STEEL LINE POSTS SHALL BE PAINTED OR GALVANIZED.
TUBULAR END, CORNER, PULL, OR DIAGONAL BRACES MUST CONFORM TO THE DIMENSIONS AND WEIGHTS SPECIFIED ON STANDARD DRAWING WF-3 (CHAIN LINK). APPROVED ALTERNATES ARE ACCEPTABLE.
AN ACCEPTABLE TOLERANCE IN LENGTH OF TUBULAR OR WOODEN POSTS SHALL BE - 1" TO +2".
TUBULAR POSTS MUST BE PAINTED OR GALVANIZED.

THE CONTRACTOR SHALL FURNISH AT LEAST 25% OF TIMBER LINE POSTS OF 7 FOOT LENGTHS IN ORDER TO PROVIDE SUFFICIENT SET IN SOFT GROUND OR SMALL DEPRESSIONS.

DRIVEWAY GATES, EITHER SINGLE 12' TO 16' OR DOUBLE 6' TO 8' OPENING OF THE SAME TYPE AS THE PEDESTRIAN GATE, SHALL BE INSTALLED ON THE RIGHT SIDE OF EACH THROUGH LANE ROAD AT LARGE CULVERTS OR BRIDGE CROSS FENCE, FOR USE OF MAINTENANCE EQUIPMENT. LOCATION OF GATES TO BE SHOWN ON PLANS OR AS DESIGNATED BY THE ENGINEER.

AT STREAM CROSSINGS, THE FENCE SHALL NOT BE CONSTRUCTED ACROSS LARGE STREAMS. WHERE CLEARANCE IS SUFFICIENT FROM THE TOP OF THE BANK TO THE BRIDGE STRUCTURE A CROSS CONNECTION SHALL BE CONSTRUCTED BETWEEN THE FENCE ON EACH SIDE OF THE ROAD. WHERE THE CLEARANCE IS NOT SUFFICIENT, THE FENCE SHALL BE TERMINATED WITH CROSS CONNECTIONS AND END POSTS ADJACENT TO BRIDGE ABUTMENTS OR CULVERT WINGWALLS.

SPLICE FOR BARBED WIRE BETWEEN PULL POST ASSEMBLY SHALL BE BY THE "EYE METHOD" AS DESCRIBED AS FOLLOWS: THE ENDS OF THE BARBED WIRE SHALL BE BENT TO FORM A LOOP. THE LOOPS SHALL BE CONNECTED. AFTER THE LOOPS ARE CONNECTED THE ENDS OF THE WIRE SHALL BE WRAPPED AROUND THE PROJECTING WIRES A MINIMUM OF 4 TIMES FOR EACH WIRE LOOP.

SPLICE FOR WOVEN WIRE BETWEEN PULL POST SHALL BE BY THE "WESTERN UNION METHOD" AS DESCRIBED AS FOLLOWS: THE VERTICAL WIRES FOR EACH END OF THE FENCE FABRIC SHALL BE PLACED SIDE BY SIDE AND THE PROJECTING HORIZONTAL WIRES SHALL BE WRAPPED A MINIMUM OF 4 TIMES AROUND THE HORIZONTAL WIRES OF THE FIRST WEB.

STAPLE AT LEAST TOP, BOTTOM AND ALTERNATE WIRES OF WOVEN FABRIC FOR WOOD LINE POSTS.

TYPE C FENCE (STEEL POSTS)

4 STRANDS BARBED WIRE (D)
5 STRANDS BARBED WIRE (D-1)
6 STRANDS BARBED WIRE (D-2)

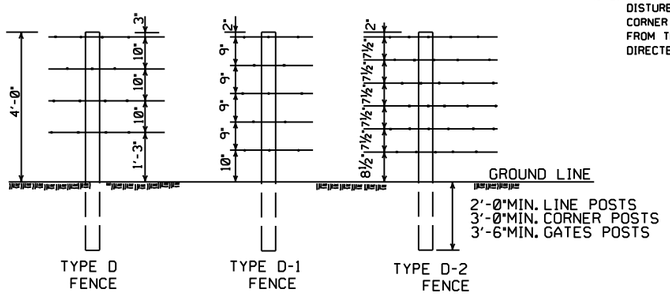

NOTE: SPACING AND SIZE (EXCEPT LENGTH) OF POSTS, APPROACH SPANS, PULL POST ASSEMBLIES, AND CORNER BRACING FOR TYPE D FENCE SHALL CONFORM TO TYPE C FENCE. USE GALVANIZED STAPLES ON WOOD POSTS AND APPROVED FASTENERS ON STEEL POSTS.

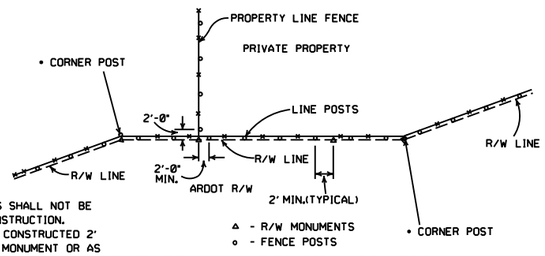

• NOTE: RIGHT-OF-WAY MONUMENTS SHALL NOT BE DISTURBED BY FENCE CONSTRUCTION. CORNER POSTS SHALL BE CONSTRUCTED 2' FROM THE RIGHT-OF-WAY MONUMENT OR AS DIRECTED BY THE ENGINEER.

RIGHT-OF-WAY FENCE LOCATION

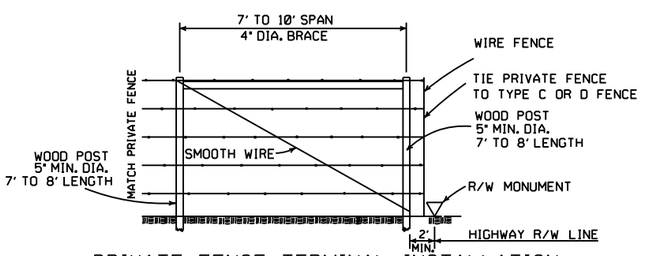

PRIVATE FENCE TERMINAL INSTALLATION
WHERE EXISTING FENCE CONSISTS OF STEEL POSTS, USE END POST ASSEMBLY AS SHOWN IN TYPE C FENCE OR OTHER END POST ASSEMBLY AS APPROVED BY THE ENGINEER.

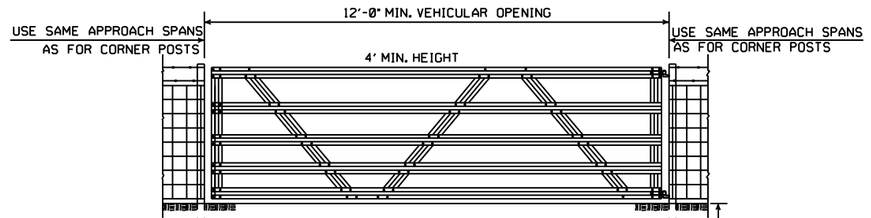

TYPICAL VEHICULAR GATES
(ALTERNATE TYPE)

OTHER STYLE VEHICULAR GATES MAY BE USED WITH THE APPROVAL OF THE ENGINEER. THE METHOD OF SECURING GATE (LATCH AND/OR LOCK) SHALL MEET THE APPROVAL OF THE ENGINEER.

DATE	REVISION	FILMED
8-22-02	REVISED GENERAL NOTES	
10-18-96	REVISED AASHTO	
11-22-95	REVISED R-O-W LOCATION DETAIL	
6-2-94	REVISED BARB WIRE AND ADDED CORNER POST NOTES	6-2-94
8-5-93	REVISED R/W INSTALLATION FENCE	8-5-93
10-1-92	ADDED STAPLE NOTE	10-1-92
8-15-91	ADDED TYPE D-2 FENCE	8-15-91
11-30-89	DELETED CLASS CONCRETE	11-30-89
7-15-88	ADDED SPLICE NOTE	700-7-15-88
10-30-87	GENERAL REVISIONS	549-10-30-87
11-1-84	MAX. POST SPACING MIN. WIRE GAUGE	507-11-1-84
1-4-83	MIN. DIA. LINE POST	648-1-4-83
3-2-81	TOLERANCE FOR POST LENGTH	722-3-2-81
12-1-72	ADDED D-1 & FENCE INSTALLATION	564-12-1-72
10-2-72	REVISED AND REDRAWN	540-10-2-72

ARKANSAS STATE HIGHWAY COMMISSION

WIRE FENCE TYPE C AND D

STANDARD DRAWING WF-4