DATE REVISED	DATE FILED	DATE REVISED	DATE FILED	FED.RD. DIST.NO.	STATE	FED.AID PROJ.NO.	SHEET NO.	TOTAL SHEETS
				6	ARK.			
				JOB NO.		061276	1	438
				② REDMOND RD. & MAIN ST. STRS & APPRS. (JACKSONVILLE) (F)				

"A FULLY CONTROLLED ACCESS FACILITY"

ARKANSAS STATE HIGHWAY AND TRANSPORTATION DEPARTMENT

CONSTRUCTION PLANS

REDMOND RD. & MAIN ST. STRS. & APPRS. (JACKSONVILLE) (F)

PULASKI COUNTY
ROUTE 67 SECTION 10
F.A.P. NHPP-9222(10)

JOB 061276

NOT TO SCALE

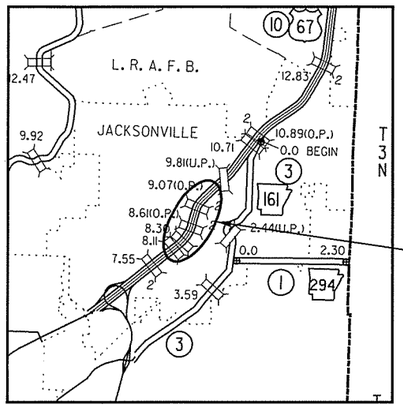

VICINITY MAP

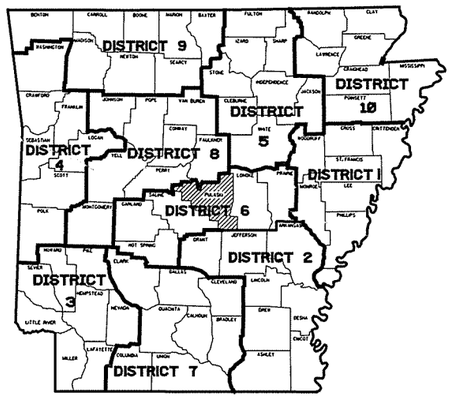

ARK. HWY. DIST. NO. 6

BRIDGE STRUCTURES

① STA. 566+14.68 ℄ CONST. BRIDGE END
280'-0" CONTINUOUS COMP. W-BEAM UNIT
BRIDGE NO. 7282A
56'-0" CLEAR ROADWAY WIDTH
282'-2 3/16" BRIDGE LENGTH
STA. 568+99.16 ℄ CONST. BRIDGE END

② STA. 566+00.49 ℄ CONST. BRIDGE END
280'-0" CONTINUOUS COMP. W-BEAM UNIT
BRIDGE NO. 7282B
64'-0" CLEAR ROADWAY WIDTH
282'-2 3/16" BRIDGE LENGTH
STA. 568+80.29 ℄ CONST. BRIDGE END

③ STA. 588+54.76 ℄ CONST. BRIDGE END
237'-0" CONTINUOUS COMP. W-BEAM UNIT
BRIDGE NO. 7283A
64'-0" CLEAR ROADWAY WIDTH
239'-4 1/16" BRIDGE LENGTH
STA. 590+90.66 ℄ CONST. BRIDGE END

④ STA. 588+79.34 ℄ CONST. BRIDGE END
238'-0" CONTINUOUS COMP. W-BEAM UNIT
BRIDGE NO. 7283B
56'-0" CLEAR ROADWAY WIDTH
240'-4 1/16" BRIDGE LENGTH
STA. 591+22.88 ℄ CONST. BRIDGE END

STRUCTURES OVER 20'-0" SPAN

⑤ STA. 539+63 ℄ CONST. - IN PLACE
DBL. 10'X7'X188' R.C. BOX CULVERT
W/DROP INLET IN MEDIAN
Q_{50} =807 CFS, D.A.= 1.1 SQ. MI.
SPAN= 22.08'
RETAIN & EXTEND R.C. BOX 14' LT. & 10' RT.
USE 3:1 WINGWALLS
ADJUST TYPE TM DROP INLET TO GRADE
(4'-0"X3'-0"XH=3'-11 1/4")

⑥ STA. 549+95 ℄ CONST. - IN PLACE
TRI. 10'X6'X186' R.C. BOX CULVERT
W/DROP INLET IN MEDIAN - MODIFY DROP INLET
Q_{50} =1210 CFS, D.A.= 1.6 SQ. MI.
SPAN= 32.92'
RETAIN & EXTEND 35' LT. & 19' RT.
USE 3:1 WINGWALLS

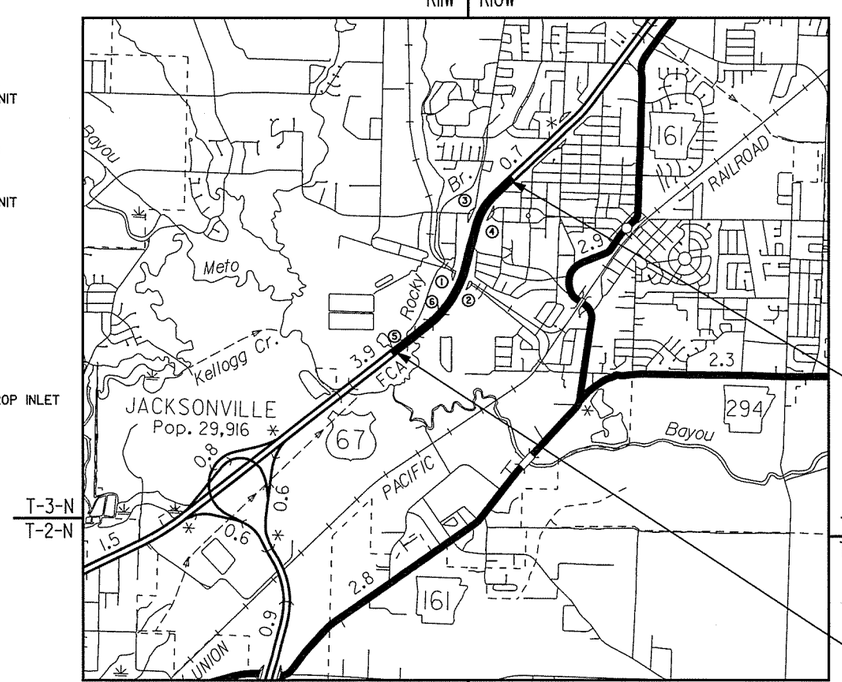

N

DESIGN TRAFFIC DATA - HWY. 67

DESIGN YEAR	2033
2013 ADT	78,000
2033 ADT	101,000
2033 DHV	11,110
DIRECTIONAL DISTRIBUTION	0.60
TRUCKS	8%
DESIGN SPEED	60 MPH

STA. 600+00.00 ℄ CONST. HWY. 67
END JOB 061276
LOG MILE 9.25

STA. 534+00.00 ℄ CONST. HWY. 67
BEGIN JOB 061276
LOG MILE 8.00

	BEGIN PROJECT	MID-POINT OF PROJECT	END PROJECT
LATITUDE	N 34°51'17"	N 34°51'44"	N 34°52'10"
LONGITUDE	W 92°08'13"	W 92°07'53"	W 92°07'33"

LENGTH COMPUTED ALONG ℄ CONST. HWY. 67

GROSS LENGTH OF PROJECT	6,600.00	FEET OR 1.250	MILES
NET LENGTH OF ROADWAY	6,023.14	FEET OR 1.141	MILES
NET LENGTH OF BRIDGES	576.86	FEET OR 0.109	MILES
NET LENGTH OF PROJECT	6,600.00	FEET OR 1.250	MILES

STATE OF ARKANSAS
REGISTERED PROFESSIONAL ENGINEER
No. 9808
JAMES L. BARR
8/20/13

P.E. JOB 061261
NON-PART.

JOB 061276

INDEX OF SHEETS

SHEET NO.	TITLE	STRUCTURE NO./BRIDGE NO.	DRWG. NO.	DATE
1	TITLE SHEET			
2-3	INDEX OF SHEETS			
4	GOVERNING SPECIFICATIONS			
5	GENERAL AND TRAFFIC SIGNAL NOTES			
6-19	TYPICAL SECTIONS OF IMPROVEMENT			
20-39D	SPECIAL DETAILS			
40-54	TEMPORARY EROSION CONTROL DETAILS			
55-109	MAINTENANCE OF TRAFFIC DETAILS			
110-113	PAVEMENT MARKING DETAILS			
114	SIGNING SUMMARY AND SIGNING QUANTITIES			
115	SIGNING QUANTITIES			
116-124	SIGN LAYOUT AND PLACEMENT SHEETS			
125	SOIL LOG			
126-133	QUANTITY SHEETS			
134	SCHEDULE OF BRIDGE QUANTITIES	A & B7282 , A & B7283	53581	
135-137	SUMMARY OF QUANTITIES AND REVISIONS			
138-141	SURVEY CONTROL DETAILS			
142-152	PLAN AND PROFILE SHEETS - MAIN LANES			
153	INTERCHANGE LAYOUT - REDMOND ROAD			
154-157	PLAN AND PROFILE SHEETS - REDMOND ROAD AND RAMPS			
158	INTERCHANGE LAYOUT - MAIN STREET			
159-163	PLAN AND PROFILE SHEETS - MAIN STREET AND RAMPS			
164	SUMMARY OF TRAFFIC SIGNAL QUANTITIES			
165	SYSTEM MAP			
166-174	SIGNALIZATION PLANS			
175-176	CULVERT DIAGRAMS			
177	LAYOUT OF BRIDGES OVER REDMOND ROAD (SHEET 1 OF 2)	A & B7282	53582	
178	LAYOUT OF BRIDGES OVER REDMOND ROAD (SHEET 2 OF 2)	A & B7282	53583	
179	STAKING DIAGRAM BRIDGES OVER REDMOND ROAD	A & B7282	53584	
180	DETAILS OF STAGE CONSTRUCTION (SHEET 1 OF 2)	A & B7282	53585	
181	DETAILS OF STAGE CONSTRUCTION (SHEET 2 OF 2)	A & B7282	53586	
182	EXHIBIT A - LAYOUT OF BRIDGES OVER REDMOND ROAD (SHEET 1 OF 2)	A & B7282	53587	
183	EXHIBIT A - LAYOUT OF BRIDGES OVER REDMOND ROAD (SHEET 2 OF 2)	A & B7282	53588	
184	DETAILS OF BENT 1 - BRIDGE A (SHEET 1 OF 3)	A7282	53589	
185	DETAILS OF BENT 1 - BRIDGE A (SHEET 2 OF 3)	A7282	53590	
186	DETAILS OF BENT 1 - BRIDGE A (SHEET 3 OF 3)	A7282	53591	
187	COMMON DETAILS OF END BENTS	A & B7282	53592	
188	DETAILS OF BENT 2 - BRIDGE A	A7282	53593	
189	DETAILS OF BENT 3 - BRIDGE A	A7282	53594	
190	DETAILS OF BENT 4 - BRIDGE A	A7282	53595	
191	COMMON INTERIOR BENT DETAILS - BRIDGE A	A7282	53596	
192	DETAILS OF BENT 5 - BRIDGE A (SHEET 1 OF 3)	A7282	53597	
193	DETAILS OF BENT 5 - BRIDGE A (SHEET 2 OF 3)	A7282	53598	
194	DETAILS OF BENT 5 - BRIDGE A (SHEET 3 OF 3)	A7282	53599	
195	DETAILS OF 280'-0" CONTINUOUS COMPOSITE W-BEAM UNIT - BRIDGE A (SHEET 1 OF 5)	A7282	53600	
196	DETAILS OF 280'-0" CONTINUOUS COMPOSITE W-BEAM UNIT - BRIDGE A (SHEET 2 OF 5)	A7282	53601	
197	DETAILS OF 280'-0" CONTINUOUS COMPOSITE W-BEAM UNIT - BRIDGE A (SHEET 3 OF 5)	A7282	53602	
198	DETAILS OF 280'-0" CONTINUOUS COMPOSITE W-BEAM UNIT - BRIDGE A (SHEET 4 OF 5)	A7282	53603	
199	DETAILS OF 280'-0" CONTINUOUS COMPOSITE W-BEAM UNIT - BRIDGE A (SHEET 5 OF 5)	A7282	53604	
200	DETAILS OF CHAIN LINK FENCE -BRIDGE A	A7282	53604A	
201	COMMON DETAILS OF CONTINUOUS COMPOSITE W-BEAM UNIT (SHEET 1 OF 6)	A & B7282	53605	
202	COMMON DETAILS OF CONTINUOUS COMPOSITE W-BEAM UNIT (SHEET 2 OF 6)	A & B7282	53606	
203	COMMON DETAILS OF CONTINUOUS COMPOSITE W-BEAM UNIT (SHEET 3 OF 6)	A & B7282	53607	
204	COMMON DETAILS OF CONTINUOUS COMPOSITE W-BEAM UNIT (SHEET 4 OF 6)	A & B7282	53608	
205	COMMON DETAILS OF CONTINUOUS COMPOSITE W-BEAM UNIT (SHEET 5 OF 6)	A & B7282	53609	
206	COMMON DETAILS OF CONTINUOUS COMPOSITE W-BEAM UNIT (SHEET 6 OF 6)	A & B7282	53610	
207	DETAILS OF BENT 1 - BRIDGE B (SHEET 1 OF 3)	B7282	53611	
208	DETAILS OF BENT 1 - BRIDGE B (SHEET 2 OF 3)	B7282	53612	
209	DETAILS OF BENT 1 - BRIDGE B (SHEET 3 OF 3)	B7282	53613	
210	DETAILS OF BENT 2 - BRIDGE B	B7282	53614	
211	DETAILS OF BENT 3 - BRIDGE B	B7282	53615	
212	DETAILS OF BENT 4 - BRIDGE B	B7282	53616	
213	COMMON INTERIOR BENT DETAILS - BRIDGE B	B7282	53617	
214	DETAILS OF BENT 5 - BRIDGE B (SHEET 1 OF 3)	B7282	53618	
215	DETAILS OF BENT 5 - BRIDGE B (SHEET 2 OF 3)	B7282	53619	
216	DETAILS OF BENT 5 - BRIDGE B (SHEET 3 OF 3)	B7282	53620	
217	DETAILS OF 280'-0" CONTINUOUS COMPOSITE W-BEAM UNIT - BRIDGE B (SHEET 1 OF 5)	B7282	53621	
218	DETAILS OF 280'-0" CONTINUOUS COMPOSITE W-BEAM UNIT - BRIDGE B (SHEET 2 OF 5)	B7282	53622	
219	DETAILS OF 280'-0" CONTINUOUS COMPOSITE W-BEAM UNIT - BRIDGE B (SHEET 3 OF 5)	B7282	53623	
220	DETAILS OF 280'-0" CONTINUOUS COMPOSITE W-BEAM UNIT - BRIDGE B (SHEET 4 OF 5)	B7282	53624	
221	DETAILS OF 280'-0" CONTINUOUS COMPOSITE W-BEAM UNIT - BRIDGE B (SHEET 5 OF 5)	B7282	53625	
222	DETAILS OF ARMORED JOINT WITH POURED SILICONE JOINT	A & B7282	53626	
223	DETAILS OF ELASTOMERIC BEARINGS	A & B7282	53627	
224	APPROACH GUTTERS AND APPROACH SLABS LAYOUT	A & B7282	53628	
225	DETAILS OF TYPE SPECIAL 1 APPROACH SLABS	A7282	53629	
226	DETAILS OF TYPE SPECIAL 2 APPROACH SLABS	A7282	53630	
227	DETAILS OF TYPE SPECIAL 3 APPROACH SLABS	A7283	53631	
228	DETAILS OF TYPE SPECIAL 4 APPROACH SLABS	A7284	53632	
229	DETAILS OF TYPE SPECIAL 1 APPROACH GUTTERS	A7285	53633	
230	DETAILS OF TYPE SPECIAL 2 APPROACH GUTTERS (SHEET 1 OF 2)	A & B7282	53634	
231	DETAILS OF TYPE SPECIAL 2 APPROACH GUTTERS (SHEET 2 OF 2)	A & B7282	53635	
232	LAYOUT OF BRIDGES OVER MAIN STREET (SHEET 1 OF 2)	A & B7283	53636	
233	LAYOUT OF BRIDGES OVER MAIN STREET (SHEET 2 OF 2)	A & B7283	53637	
234	STAKING DIAGRAM BRIDGES OVER MAIN STREET	A & B7283	53638	
235	DETAILS OF STAGE CONSTRUCTION (SHEET 1 OF 2)	A & B7283	53639	
236	DETAILS OF STAGE CONSTRUCTION (SHEET 2 OF 2)	A & B7283	53640	
237	DETAILS OF BENT 1 - BRIDGE A (SHEET 1 OF 3)	A7283	53641	
238	DETAILS OF BENT 1 - BRIDGE A (SHEET 2 OF 3)	A7283	53642	
239	DETAILS OF BENT 1 - BRIDGE A (SHEET 3 OF 3)	A7283	53643	
240	COMMON END BENT DETAILS - BRIDGE A	A7283	53644	
241	DETAILS OF BENT 2 - BRIDGE A	A7283	53645	
242	DETAILS OF BENT 3 - BRIDGE A	A7283	53646	
243	COMMON INTERIOR BENT DETAILS - BRIDGE A	A7283	53647	
244	DETAILS OF BENT 4 - BRIDGE A (SHEET 1 OF 3)	A7283	53648	
245	DETAILS OF BENT 4 - BRIDGE A (SHEET 2 OF 3)	A7283	53649	
246	DETAILS OF BENT 4 - BRIDGE A (SHEET 3 OF 3)	A7283	53650	
247	DETAILS OF 237'-0" CONTINUOUS COMPOSITE W-BEAM UNIT-BRIDGE A (SHEET 1 OF 5)	A7283	53651	
248	DETAILS OF 237'-0" CONTINUOUS COMPOSITE W-BEAM UNIT-BRIDGE A (SHEET 2 OF 5)	A7283	53652	
249	DETAILS OF 237'-0" CONTINUOUS COMPOSITE W-BEAM UNIT-BRIDGE A (SHEET 3 OF 5)	A7283	53653	
250	DETAILS OF 237'-0" CONTINUOUS COMPOSITE W-BEAM UNIT-BRIDGE A (SHEET 4 OF 5)	A7283	53654	
251	DETAILS OF 237'-0" CONTINUOUS COMPOSITE W-BEAM UNIT-BRIDGE A (SHEET 5 OF 5)	A7283	53655	
252	COMMON DETAILS OF CONTINUOUS COMPOSITE W-BEAM UNIT (SHEET 1 OF 4)	A & B7283	53656	
253	COMMON DETAILS OF CONTINUOUS COMPOSITE W-BEAM UNIT (SHEET 2 OF 4)	A & B7283	53657	
254	COMMON DETAILS OF CONTINUOUS COMPOSITE W-BEAM UNIT (SHEET 3 OF 4)	A & B7283	53658	

INDEX OF SHEETS

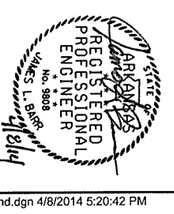

DATE REVISED	DATE PLANS	DATE REVISED	DATE PLANS

FED.ROAD DIST.NO.	STATE	FED.AID PROJ.NO.	SHEET NO.	TOTAL SHEETS
6	ARK.		2	438

JOB NO. 061276

INDEX OF SHEETS

r061276.ind.dgn 4/8/2014 5:20:42 PM

INDEX OF SHEETS (CONTINUED)

SHEET NO.	TITLE	STRUCTURE NO. /BRIDGE NO.	DRWG. NO.	DATE
255	COMMON DETAILS OF CONTINUOUS COMPOSITE W-BEAM UNIT (SHEET 4 OF 4)	A & B7283	53659	
256	DETAILS OF BENT 1 - BRIDGE B (SHEET 1 OF 2)	B7283	53660	
257	DETAILS OF BENT 1 - BRIDGE B (SHEET 2 OF 2)	B7283	53661	
258	COMMON END BENT DETAILS - BRIDGE B	B7283	53662	
259	DETAILS OF BENT 2 - BRIDGE B	B7283	53663	
260	DETAILS OF BENT 3 - BRIDGE B	B7283	53664	
261	COMMON INTERIOR BENT DETAILS - BRIDGE B	B7283	53665	
262	DETAILS OF BENT 4 - BRIDGE B (SHEET 1 OF 2)	B7283	53666	
263	DETAILS OF BENT 4 - BRIDGE B (SHEET 2 OF 2)	B7283	53667	
264	DETAILS OF 238'-0" CONTINUOUS COMPOSITE W-BEAM UNIT-BRIDGE B (SHEET 1 OF 4)	B7283	53668	
265	DETAILS OF 238'-0" CONTINUOUS COMPOSITE W-BEAM UNIT-BRIDGE B (SHEET 2 OF 4)	B7283	53669	
266	DETAILS OF 238'-0" CONTINUOUS COMPOSITE W-BEAM UNIT-BRIDGE B (SHEET 3 OF 4)	B7283	53670	
267	DETAILS OF 238'-0" CONTINUOUS COMPOSITE W-BEAM UNIT-BRIDGE B (SHEET 4 OF 4)	B7283	53671	
268	DETAILS OF ARMORED JOINT WITH POURED SILICONE JOINT	A & B7283	53672	
269	DETAILS OF ELASTOMERIC BEARINGS (SHEET 1 OF 2)	A & B7283	53673	
270	DETAILS OF ELASTOMERIC BEARINGS (SHEET 2 OF 2)	A & B7283	53674	
271	APPROACH GUTTERS AND APPROACH SLABS LAYOUT	A & B7283	53675	
272	DETAILS OF TYPE SPECIAL 5 APPROACH SLABS	A7283	53676	
273	DETAILS OF TYPE SPECIAL 6 APPROACH SLABS	A7283	53677	
274	DETAILS OF TYPE SPECIAL 7 APPROACH SLABS	B7283	53678	
275	DETAILS OF TYPE SPECIAL 8 APPROACH SLABS	B7283	53679	
276	DETAILS OF TYPE SPECIAL 3 APPROACH GUTTERS	A7283	53680	
277	DETAILS OF TYPE SPECIAL 4 APPROACH GUTTERS	B7283	53681	
278	DETAILS OF TYPE SPECIAL 5 APPROACH GUTTERS (SHEET 1 OF 2)	A & B7283	53682	
279	DETAILS OF TYPE SPECIAL 5 APPROACH GUTTERS (SHEET 2 OF 2)	A & B7283	53683	
280	LAYOUT OF BARRIER AND RETAINING WALLS		53684	
281	LAYOUT OF MSE RETAINING WALL MW-1		53685	
282	LAYOUT OF MSE RETAINING WALL MW-2		53685A	
283	LAYOUT OF MSE RETAINING WALL MW-3		53685B	
284	LAYOUT OF RETAINING WALLS GW-1 & MW-4		53685C	
285	ELEVATION OF MSE RETAINING WALL MW-4		53685D	
286	LAYOUT OF MSE RETAINING WALL MW-5		53685E	
287	LAYOUT OF MSE RETAINING WALLS MW-6 & MW-7		53685F	
288	RETAINING WALL DETAILS (SHEET 1 OF 3)		53685G	
289	RETAINING WALL DETAILS (SHEET 2 OF 3)		53685H	
290	RETAINING WALL DETAILS (SHEET 3 OF 3)		53685J	
291	DETAILS FOR RELOCATION OF EXISTING OVERHEAD SIGN STRUCTURE OH-067-60-26 (SHEET 1 OF 2)	OH-067-60-26	51135	
292	DETAILS FOR RELOCATION OF EXISTING OVERHEAD SIGN STRUCTURE OH-067-60-26 (SHEET 2 OF 2)	OH-067-60-26	51136	
293	DETAILS FOR 70' TO 85' STEEL OVERHEAD SIGN STRUCTURES (SHEET 1 OF 5)	OH-067-60-22 & OH-067-60-29	53686	
294	DETAILS FOR 70' TO 85' STEEL OVERHEAD SIGN STRUCTURES (SHEET 2 OF 5)	OH-067-60-22 & OH-067-60-29	53687	
295	DETAILS FOR 70' TO 85' STEEL OVERHEAD SIGN STRUCTURES (SHEET 3 OF 5)	OH-067-60-22 & OH-067-60-29	53688	
296	DETAILS FOR 70' TO 85' STEEL OVERHEAD SIGN STRUCTURES (SHEET 4 OF 5)	OH-067-60-22 & OH-067-60-29	53689	
297	DETAILS FOR 70' TO 85' STEEL OVERHEAD SIGN STRUCTURES (SHEET 5 OF 5)	OH-067-60-22 & OH-067-60-29	53690	
298	STANDARD DETAILS FOR EMBANKMENT CONSTRUCTION AND BACKFILL AT BRIDGE ENDS		55000	02-27-14
299	STANDARD DETAILS FOR DUMPED RIPRAP AND FILTER BLANKET AND COMPUTING EXCAVATION FOR STRUCTURES		55001	02-27-14
300	STANDARD DETAILS FOR CONCRETE RIPRAP		55002	02-27-14
301	STANDARD DETAILS FOR PERMANENT STEEL BRIDGE DECK FORMS FOR STEEL & CONCRETE GIRDER SPANS		55005	02-27-14
302	STANDARD DETAILS FOR TYPE D BRIDGE NAME PLATE		55010	02-27-14
303	STANDARD DETAILS FOR TYPE C APPROACH GUTTERS		55030C	02-27-14
304	NOT USED			
305	CONCRETE DITCH PAVING		CDP-1	11-17-10
306	CURBING DETAILS		CG-1	11-29-07
307	TRANSVERSE & LONGITUDINAL JOINTS FOR CONCRETE PAVEMENT (NON-REINFORCED)		CPTJ-6A	05-25-06
308	DETAILS OF DRIVEWAYS & ISLANDS		DR-1	02-27-14
309	FLARED END SECTION		FES-1	10-18-96
310	FLARED END SECTION		FES-2	10-18-96
311	DETAILS OF DROP INLETS & JUNCTION BOXES		FPC-9	11-16-01
312	DETAILS OF DROP INLETS		FPC-9D	08-22-02
313	DETAILS OF DROP INLETS (TYPE C)		FPC-9E	08-22-02
314	DETAILS OF DROP INLETS (TYPE MO)		FPC-9M	08-22-02
315	DETAILS OF DROP INLETS AND SPILLWAY OUTLET		FPC-9N	07-02-98
316	DETAILS OF DROP INLET & JUNCTION BOX (TYPE ST)		FPC-9S	07-26-12
317	GUARD RAIL DETAILS		GR-8	07-14-10
318	GUARD RAIL DETAILS		GR-8A	07-14-10
319	GUARD RAIL DETAILS		GR-9	04-17-08
320	GUARD RAIL DETAILS		GR-9A	04-17-08
321	GUARD RAIL DETAILS		GR-10	07-14-10
322	GUARD RAIL DETAILS		GR-10A	07-14-10
323	GUARD RAIL DETAILS		GRT-1	07-14-10
324	CONCRETE PIPE CULVERT FILL HEIGHTS & BEDDING		PCC-1	02-27-14
325	METAL PIPE CULVERT FILL HEIGHTS & BEDDING		PCM-1	02-27-14
326	PLASTIC PIPE CULVERT (HIGH DENSITY POLYETHYLENE)		PCP-1	02-27-14
327	PLASTIC PIPE CULVERT (PVC F949)		PCP-2	02-27-14
328	PAVEMENT MARKING DETAILS		PM-1	09-12-13
329	PERMANENT PAVEMENT MARKING ON ACCESS CONTROLLED ROADWAYS		PM-2	09-12-13
330	DETAILS OF PIPE UNDERDRAIN		PU-1	04-10-03
331	REINFORCED CONCRETE BOX CULVERT DETAILS		RCB-1	07-26-12
332	EXCAVATION PAY LIMITS, BACKFILL, & SOLID SODDING FOR BOX CULVERTS		RCB-2	11-20-03
333	METHOD OF EXTENDING EXISTING R.C. BOX CULVERTS		RCB-3	10-12-95
334	CONTROLLER CABINET UTILITY DRAWER		SD-5	09-12-13
335	HEAVY DUTY PULL BOX		SD-6	09-12-13
336	SIGNAL HEAD PLACEMENT		SD-8	09-12-13
337	SERVICE POINT		SD-9	09-12-13
338	STEEL POLE WITH MAST ARM		SD-11	02-27-14
339	TABLES AND METHOD OF SUPERELEVATION FOR ONE-WAY TRAFFIC		SE-1	01-09-87
340	TABLES AND METHOD OF SUPERELEVATION FOR TWO-WAY TRAFFIC		SE-2	10-18-96
341	STANDARD HIGHWAY SIGNS AND SUPPORTS ASSEMBLIES		SHS-1	09-12-13
342	U-CHANNEL POST ASSEMBLIES		SHS-2	02-27-14
343	DETAIL OF BREAKAWAY SIGN SUPPORTS FOR GUIDE SIGNS		SHS-3	09-12-13
344	DETAIL OF BREAKAWAY SIGN SUPPORTS FOR STANDARD SIGNS		SHS-4	09-12-13
345	DETAILS OF GUIDE SIGN PANELS		SHS-5	09-12-13
346	MOUNTING DETAILS FOR DEMOUNTABLE LEGEND ON GUIDE SIGNS		SHS-6	09-12-13
347	DETAILS OF SPECIAL ITEMS		SI-1	09-12-13
348	STANDARD TRAFFIC CONTROLS FOR HIGHWAY CONSTRUCTION		TC-1	12-15-11
349	STANDARD TRAFFIC CONTROLS FOR HIGHWAY CONSTRUCTION		TC-2	09-12-13
350	STANDARD TRAFFIC CONTROLS FOR HIGHWAY CONSTRUCTION		TC-3	10-15-09
351	STANDARD TRAFFIC CONTROLS FOR HIGHWAY CONSTRUCTION - TEMPORARY PRECAST BARRIER		TC-4	02-27-14
352	STANDARD TRAFFIC CONTROLS FOR HIGHWAY CONSTRUCTION - TEMPORARY PRECAST BARRIER		TC-5	10-15-09
353	TEMPORARY EROSION CONTROL DEVICES		TEC-1	12-15-11
354	TEMPORARY EROSION CONTROL DEVICES		TEC-2	06-02-94
355	TEMPORARY EROSION CONTROL DEVICES		TEC-3	11-03-94
356	TEMPORARY EROSION CONTROL DEVICES		TEC-4	07-26-12
357	DETAILS OF STANDARD TURNOUT FOR ENTRANCE & EXIT RAMPS (NON - REINFORCED)		TR-1A	08-22-02
358	CHAIN LINK FENCE		WF-3	11-17-10
359	WHEELCHAIR RAMPS NEW CONSTRUCTION AND ALTERATIONS		WR-1	11-10-05
360	DETAILS OF STANDARD BARREL SECTIONS FOR REINFORCED CONCRETE BOX CULVERTS		R-200X-X2	01-14-63
360A	DETAILS OF STANDARD BARREL SECTIONS FOR REINFORCED CONCRETE BOX CULVERTS		R-300X-X2	01-13-65
360B	DETAILS OF STANDARD WINGS FOR REINFORCED CONCRETE BOX CULVERTS		W-X003-1	05-10-66
361-438	CROSS SECTIONS			

NOTE: CROSS SECTIONS NOT NORMALLY INCLUDED IN PLANS SOLD TO PROSPECTIVE BIDDERS, BUT ARE AVAILABLE UPON REQUEST.

INDEX OF SHEETS

STATE OF ARKANSAS
REGISTERED PROFESSIONAL ENGINEER
No. 9808
JAMES L. BARR

DATE REVISED	DATE FILED	DATE REVISED	DATE FILED

FED.RD. DIST.NO.	STATE	FED.AID PROJ.NO.	SHEET NO.	TOTAL SHEETS
6	ARK.	061276	3	438

JOB NO.

INDEX OF SHEETS

r061276.ind.dgn 4/17/2014 10:27:21 AM

GOVERNING SPECIFICATIONS

ARKANSAS STATE HIGHWAY COMMISSION STANDARD SPECIFICATIONS FOR HIGHWAY CONSTRUCTION, EDITION OF 2014, AND THE FOLLOWING SPECIAL PROVISIONS AND SUPPLEMENTAL SPECIFICATIONS:

NUMBER	TITLE
ERRATA	ERRATA FOR THE BOOK OF STANDARD SPECIFICATIONS
FHWA-1273	REQUIRED CONTRACT PROVISIONS FEDERAL-AID CONSTRUCTION CONTRACTS
FHWA-1273	SUPPLEMENT - EQUAL EMPLOYMENT OPPORTUNITY - NOTICE TO CONTRACTORS
FHWA-1273	SUPPLEMENT - SPECIFIC EQUAL EMPLOYMENT OPPORTUNITY RESPONSIBILITIES (23 U.S.C. 140)
FHWA-1273	SUPPLEMENT - EQUAL EMPLOYMENT OPPORTUNITY - GOALS AND TIMETABLES
FHWA-1273	SUPPLEMENT - EQUAL EMPLOYMENT OPPORTUNITY - FEDERAL STANDARDS
FHWA-1273	SUPPLEMENT - TRAINING PROGRAM - JOB 061276
FHWA-1273	SUPPLEMENT - POSTERS AND NOTICES REQUIRED FOR FEDERAL-AID PROJECTS
FHWA-1273	SUPPLEMENT - WAGE RATE DETERMINATION
108-1	LIQUIDATED DAMAGES
410-1	CONSTRUCTION REQUIREMENTS AND ACCEPTANCE OF ASPHALT CONCRETE PLANT MIX COURSES
620-1	MULCH COVER
JOB 061276	AIRPORT CLEARANCE REQUIREMENTS
JOB 061276	ASSESSMENT OF WORKING DAYS - SATURDAYS
JOB 061276	BROADBAND INTERNET SERVICE FOR ASPHALT CONCRETE PLANT
JOB 061276	BROADBAND INTERNET SERVICE FOR FIELD OFFICE
JOB 061276	CABINET DRAWER ASSEMBLY
JOB 061276	CHANNEL POST SIGN SUPPORT
JOB 061276	CONCRETE BARRIER WALL
JOB 061276	CONCRETE DITCH PAVING
JOB 061276	CONSTRUCTION IN SPECIAL FLOOD HAZARD AREAS
JOB 061276	COORDINATION OF WORK
JOB 061276	ELASTOMERIC BEARINGS
JOB 061276	ELECTRICAL CONDUCTORS-IN-CONDUIT
JOB 061276	ELECTRICAL CONDUCTORS FOR LUMINAIRES
JOB 061276	GOALS FOR DISADVANTAGED BUSINESS ENTERPRISE PARTICIPATION
JOB 061276	HIGH PERFORMANCE PAVEMENT MARKING
JOB 061276	INSURANCE, CONSTRUCTION, AND FLAGGING REQUIREMENTS ON RAILROAD PROPERTY (CITY OF JACKSONVILLE AND ARKANSAS MIDLAND RAILROAD)
JOB 061276	LED COUNTDOWN PEDESTRIAN SIGNAL HEAD
JOB 061276	LED TRAFFIC SIGNAL HEAD
JOB 061276	LUMINAIRE ASSEMBLY (CUTOFF TYPE)
JOB 061276	MAINTENANCE OF TRAFFIC
JOB 061276	MANDATORY USE OF INTERNET BIDDING
JOB 061276	MSE RETAINING WALLS
JOB 061276	NESTING SITES OF MIGRATORY BIRDS
JOB 061276	PARTNERING REQUIREMENTS
JOB 061276	PIPE CULVERTS
JOB 061276	PLASTIC PIPE
JOB 061276	PROSECUTION AND PROGRESS
JOB 061276	RELOCATION OF CAMERA ASSEMBLY
JOB 061276	RELOCATION OF EXISTING OVERHEAD SIGNS
JOB 061276	RELOCATION OF EXISTING OVERHEAD SIGN STRUCTURES
JOB 061276	RELOCATION OF VARIABLE MESSAGE SIGN ASSEMBLY
JOB 061276	REMOVAL AND DISPOSAL OF GUARDRAIL
JOB 061276	REMOVAL AND DISPOSAL OF OVERHEAD SIGN STRUCTURE
JOB 061276	REMOVAL AND DISPOSAL OF WIRE ROPE SAFETY FENCE
JOB 061276	REMOVING EXISTING PORTLAND CEMENT CONCRETE PAVEMENT
JOB 061276	RETAINING WALLS
JOB 061276	SEQUENCE OF CONSTRUCTION
JOB 061276	SHORING
JOB 061276	SIGN PANEL MATERIALS AND FABRICATION
JOB 061276	SITE USE (A+C METHOD)
JOB 061276	SOIL STABILIZATION
JOB 061276	SPECIAL SAFETY REQUIREMENTS FOR BRIDGES
JOB 061276	SPECIAL SAFETY REQUIREMENTS FOR OVERHEAD SIGNS
JOB 061276	STEEL SIGN STRUCTURES
JOB 061276	STORM WATER POLLUTION PREVENTION PLAN
JOB 061276	STREET NAME SIGN (MAST ARM MOUNTED)
JOB 061276	SUBMISSION OF ASPHALT CONCRETE HOT MIX ACCEPTANCE TEST RESULTS
JOB 061276	TEMPORARY RETAINING WALLS
JOB 061276	TEMPORARY TERMINAL ANCHOR FOR WIRE ROPE SAFETY FENCE
JOB 061276	TRAFFIC CONTROL DEVICES IN CONSTRUCTION ZONES
JOB 061276	TRAFFIC CONTROL SUPERVISOR
JOB 061276	TRAFFIC SIGNAL CONTROLLER (MODIFICATION)
JOB 061276	UTILITY ADJUSTMENTS
JOB 061276	VALUE ENGINEERING
JOB 061276	VIDEO DETECTOR (COLOR)
JOB 061276	WARM MIX ASPHALT
JOB 061276	WIRE ROPE SAFETY FENCE (POST REPAIR)
JOB 061276	WIRE ROPE SAFETY FENCE (WRSF) SPECIFICATIONS

GOVERNING SPECIFICATIONS

STATE OF ARKANSAS
JAMES L. BARR
No. 9808
REGISTERED PROFESSIONAL ENGINEER
5/2/2014

DATE REVISED	DATE PLANS	DATE REVISED	DATE PLANS	FED.AID DIST.NO.	STATE	FED.AID PROJ.NO.	SHEET NO.	TOTAL SHEETS
5/2/2014				6	ARK.		4	438
				JOB NO.		061276		

(2) GOVERNING SPECIFICATIONS

r061276.ind.dgn 5/2/2014 9:54:57 AM

DATE REVISED	DATE FILMED	DATE REVISED	DATE FILMED	FED.RD. DIST.NO.	STATE	FED.AID PROJ.NO.	SHEET NO.	TOTAL SHEETS
				6	ARK.			
				JOB NO.		061276	5	438

(2) GENERAL AND TRAFFIC SIGNAL NOTES

GENERAL NOTES

1. GRADE LINE DENOTES FINISHED GRADE WHERE SHOWN ON PLANS.
2. ALL PIPE LINES, POWER, TELEPHONE AND TELEGRAPH LINES TO BE MOVED OR LOWERED BY THE RESPECTIVE OWNERS AS PER AGREEMENT WITH SUCH OWNERS.
3. ANY EQUIPMENT OR APPURTENANCE THAT INTERFERES WITH THE PROPOSED CONSTRUCTION AND WHICH MAY BE THE PROPERTY OF UTILITY SERVICE ORGANIZATIONS SHALL BE MOVED BY THE OWNERS UNLESS OTHERWISE PROVIDED.
4. THE CONTRACTOR SHALL BE RESPONSIBLE FOR MAINTAINING U.S. MAILBOXES WITHIN THE PROJECT LIMITS IN SUCH A MANNER THAT THE PUBLIC MAY RECEIVE CONTINUED MAIL SERVICE. PAYMENT WILL BE CONSIDERED INCLUDED IN THE PRICE BID FOR THE VARIOUS BID ITEMS.
5. ALL LAND MONUMENTS LOCATED WITHIN THE CONSTRUCTION AREA SHALL BE PROTECTED IN ACCORDANCE WITH SECTION 107.12 OF THE STANDARD SPECIFICATIONS.
6. ALL TREES THAT DO NOT DIRECTLY INTERFERE WITH THE PROPOSED CONSTRUCTION SHALL BE SPARED AS DIRECTED BY THE ENGINEER. CARE AND DISCRETION SHALL BE USED TO INSURE THAT ALL TREES NOT TO BE REMOVED SHALL BE HARMED AS LITTLE AS POSSIBLE DURING THE CONSTRUCTION OPERATIONS.
7. THE CONTRACTOR SHALL BE RESPONSIBLE FOR PROVIDING A FENCE TO CONTROL LIVESTOCK IN AREAS WHERE PASTURES ARE SEVERED. WIRE FENCES MAY BE CONSTRUCTED INITIALLY, OR IN LIEU THEREOF, THE CONTRACTOR AT HIS OWN EXPENSE, MAY ELECT TO PROVIDE TEMPORARY FENCING SUITABLE TO CONTAIN LIVESTOCK.
8. ALL FLEXIBLE BASE AND ASPHALTIC PAVEMENTS REMOVED SHALL BE PAID FOR UNDER THE ITEM NO. 210 - UNCLASSIFIED EXCAVATION.
9. THE CONTRACTOR SHALL CONTACT ALL FIBER OPTIC COMPANIES INVOLVED ON THIS PROJECT AT LEAST FIVE (5) WORKING DAYS BEFORE CONSTRUCTION, INCLUDING REMOVING AND INSTALLING ANY FENCING, AND TAKE EVERY PRECAUTION NECESSARY TO AVOID CONFLICT WITH THE FIBER OPTIC CABLES. THE CONTRACTOR SHALL TELEPHONE ARKANSAS ONE-CALL SYSTEM AT 1-800-482-8998 TO DETERMINE THE LOCATION OF THE BURIED FIBER OPTIC CABLES.
10. THE EXISTING ASPHALT PAVEMENT TO BE REMOVED FROM THE REMAINING PAVEMENT SHALL BE SEPARATED BY SAWING ALONG A NEAT LINE. AFTER SAWING, THE PAVEMENT TO BE REMOVED SHALL BE CAREFULLY REMOVED IN A MANNER THAT WILL NOT DAMAGE THE PAVEMENT THAT IS TO REMAIN. ANY DAMAGE OF THE ASPHALT PAVEMENT THAT IS TO REMAIN IN PLACE SHALL BE REPAIRED AT THE CONTRACTOR'S EXPENSE.
11. THIS PROJECT IS COVERED UNDER A SECTION 404 NATIONWIDE 23 PERMIT FOR CATEGORICAL EXCLUSIONS. REFER TO SECTION 110 OF THE STANDARD SPECIFICATIONS, EDITION 2014, AND SUPPLEMENTAL SPECIFICATION 110-1, FOR PERMIT REQUIREMENTS.

TRAFFIC SIGNAL NOTES

1. PERFORM ELECTRICAL WORK IN ACCORDANCE WITH THE CURRENT EDITIONS OF THE NFPA 70 (2002) NATIONAL ELECTRICAL CODE, NFPA 101 (2000) LIFE SAFETY CODE, STATE ELECTRICAL CODE AND LOCAL ELECTRICAL CODE.
2. EXTEND GREEN EQUIPMENT GROUNDING CONDUCTOR (EGC) FROM GROUND BAR AT MAIN BREAKER TO CONTROL PANEL AND TO FIRST POLE. SOLIDLY BOND EGC TO GROUND LUG OF CONTROL CABINET AND TO POLE GROUND. ENSURE THAT ONLY ONE NEUTRAL-TO-GROUND BOND EXISTS IN THE SYSTEM AND THAT IT IS AT THE MAIN BREAKER.
3. ELECTRICAL SERVICE SHALL BE PROVIDED BY THE CITY TO A SERVICE POLE WITH EXTERNAL RAINTIGHT BREAKER (MAIN BREAKER), GALVANIZED STEEL SERVICE RISER, METER LOOP (IF REQUIRED), AND WEATHERHEAD AT A MUTUALLY ACCEPTABLE POINT WITHIN THE RIGHT-OF-WAY. IF THE SERVICE POINT IS OVER 10 FEET FROM THE CONTROLLER, THE CONTRACTOR SHALL PROVIDE AND INSTALL A SEPARATE TWO CIRCUIT EXTERNAL BREAKER (SECONDARY BREAKER) ON OR NEAR THE TRAFFIC SIGNAL CONTROLLER CABINET AND SHALL INSTALL CONDUIT, ELECTRICAL SERVICE WIRE (2c/#6 USE RATED, WITH GROUND TYPICAL), AND PERFORM WIRING TO TAP INTO THE CITY'S MAIN BREAKER AS PART OF THIS CONTRACT. CONDUIT IS PAID FOR AS A SEPARATE ITEM OF THIS CONTRACT. TWO CIRCUIT BREAKERS, CONSIDERED SUBSIDIARY TO THE CONTROL EQUIPMENT WHERE STREET LIGHTING IS INCLUDED. AS PART OF THE SIGNAL INSTALLATION, STREET LIGHTING CIRCUIT (2c/#12 AWG UF RATED, TYPICAL) SHALL BE KEPT FROM THE CIRCUIT SERVING THE TRAFFIC SIGNAL CONTROL EQUIPMENT FROM THE POINT OF TIE-IN AT THE SECONDARY BREAKER PROVIDED BY THE CONTRACTOR.
4. CONTRACTOR SHALL CONNECT A SEPARATE NEUTRAL FOR EACH LOAD SWITCH REPRESENTED ON EACH SIGNAL POLE.
5. TRAFFIC CONTROLLER CABINET AND LAYOUT SHALL BE SUCH THAT IT IS NOT NECESSARY TO SHUT DOWN POWER OR REMOVE LOAD SWITCHES IN ORDER TO EASILY TEST OR MODIFY DETECTOR INPUTS TO THE CONTROLLER.
6. CONTROLLER CABINET SHALL BE WIRED SUCH THAT DURING FLASH OPERATIONS POWER TO THE LOAD SWITCHES CANNOT BACKFEED TO LOAD SWITCH POWER BUSS.
7. ALL PARTS OF THIS INSTALLATION SHALL BE IN ACCORDANCE WITH AASHTO, THE ARKANSAS HIGHWAY AND TRANSPORTATION DEPARTMENT STANDARD SPECIFICATIONS AND DETAILS AND WITH THE MANUAL ON UNIFORM TRAFFIC CONTROL DEVICES, CURRENT EDITIONS.
8. CONDUIT INSTALLED UNDER ROADWAY SURFACES SHALL BE INSTALLED BY PUSHING OR BORING METHODS. IF THE ENGINEER DETERMINES THIS IS NOT FEASIBLE, THEN A TRENCHING METHOD AS SHOWN IN THE DETAILS MAY BE USED.
9. TRAFFIC SIGNAL POLES SHALL BE GALVANIZED. BACKPLATES SHALL BE SUPPLIED FOR ALL SIGNAL HEADS.
10. FOUNDATION FOR ALL POLES SHALL BE EXTENDED IF NECESSARY TO ACCOMMODATE THE REQUIREMENTS FOR SIGNAL HEAD CLEARANCE ABOVE ROADWAY ONLY AT LOCATIONS WHERE THE GROUND ELEVATION AT THE POLE IS BELOW THE ELEVATION OF THE ROADWAY (SEE NOTES ON SPECIAL DETAILS). PAYMENT WILL BE INCLUDED IN SECTION 714, AHTD STANDARD SPECIFICATIONS FOR HIGHWAY CONSTRUCTION.
11. ALL BOXES SHALL BE (TYPE 2 HD) UNLESS OTHERWISE INDICATED. ALL CONDUIT SHALL BE 3" DIAMETER UNLESS SPECIFIED ON THE PLANS.
12. CONTRACTOR SHALL NOTIFY ALL EXISTING UTILITY OWNERS BEFORE BEGINNING WORK ON THIS PROJECT.
13. HARDWARE INPUTS MAY BE DETERMINED BY SUPPLIER. EACH DETECTOR OUTPUT SHALL INPUT THE CONTROLLER THROUGH A SEPARATE INPUT UNLESS OTHERWISE NOTED AND BE PROGRAMMED TO ACTUATE THE ASSOCIATED PHASE. COMBINATION (COMB.) DETECTORS SHALL ALSO BE PROGRAMMED TO PROVIDE VEHICLE COUNT/OCCUPANCY DATA.
14. TO DETERMINE UTILITY CLEARANCES ABOVE THE TRAFFIC SIGNAL POLE, REFER TO THE POLE SCHEDULE FOR VERTICAL SHAFT HEIGHT. WHERE THE POLE SCHEDULE INDICATES THAT A LUMINAIRE ARM WILL BE USED, 38 FEET SHOULD BE USED TO DETERMINE UTILITY CLEARANCE ABOVE THE LUMINAIRE ARM. WHERE THE POLE SCHEDULE INDICATES A TRAFFIC SIGNAL POLE WITHOUT A LUMINAIRE ARM, A HEIGHT OF 21' SHOULD BE USED TO DETERMINE UTILITY CLEARANCE ABOVE THE TRAFFIC SIGNAL MAST ARM. AN ADDITIONAL 6 FEET SHOULD BE USED DIRECTLY ABOVE "VIDEO DETECTOR" AT LOCATIONS SHOWN ON THE SIGNAL PLANS.
15. THE DESIRABLE MINIMUM DISTANCE FROM THE FACE OF ROADWAY CURB OR SHOULDER EDGE TO THE FACE OF NON-BREAKAWAY POLE OR OBSTRUCTION IS 6 FEET. REFER TO TRAFFIC SIGNAL PLANS FOR SPECIFIC LOCATION OF POLES, CONTROLLER AND ANY OTHER NON-BREAKAWAY OBSTRUCTIONS. REFER TO "DESIGN PARAMETERS, MINIMUM CLEAR ZONE DISTANCE" FOR MINIMUM DISTANCE FROM THE EDGE OF TRAVELED WAY TO THE FACE OF A NON-BREAKAWAY POLE OR OBSTRUCTION. TRAFFIC SIGNAL POLES OR ANY OTHER NON-BREAKAWAY OBSTRUCTION SHALL NOT BE INSTALLED WITHIN THE CLEAR ZONE.
16. AS DETERMINED BY THE ENGINEER, FOUNDATION EMBEDMENT MAY BE DECREASED BY A MAXIMUM OF TWO FEET IF COMPETENT ROCK IS ENCOUNTERED PRIOR TO ACHIEVING PLAN EMBEDMENT AND AT LEAST HALF OF THE REMAINING PLAN EMBEDMENT LENGTH IS KEYED INTO COMPETENT ROCK.
17. CONNECTION OF TRAFFIC SIGNAL DISPLAY TO FIELD WIRING SHALL UTILIZE AN APPROVED TERMINAL STRIP BEHIND HAND HOLE COVER AT BASE OF POLE. TERMINAL STRIP SHALL PROVIDE PROTECTION TO PREVENT EXPOSURE TO THE PUBLIC IN THE EVENT THAT THE POLE COVER IS MISSING. PAYMENT FOR TERMINAL STRIPS SHALL BE INCLUDED IN ITEM 714-TRAFFIC SIGNAL MAST ARM AND POLE WITH FOUNDATION.
18. CONTROLLER CABINET LAYOUT AND ORIENTATION SHALL CONFORM TO IMSA STANDARDS.
19. ONE VIDEO PROGRAMMING MODULE SHALL BE PROVIDED FOR AIMING AND SETUP OF DETECTORS IF THE VIDEO SYSTEM CANNOT BE ADJUSTED THROUGH HARDWARE AND SOFTWARE PROVIDED BY ITEMS WITHIN THE JOB.
20. TRAFFIC SIGNAL CONTRACTOR MUST NOTIFY RESIDENT ENGINEER OR ASSIGNED DEPARTMENT PROJECT INSPECTOR EACH DAY PRIOR TO SIGNAL RELATED WORK. NO WORK ON TRAFFIC SIGNALS WILL BE ALLOWED OR APPROVED WITHOUT THIS PRIOR NOTIFICATION.
21. ALL STEEL POLES SHALL BE DESIGNED TO MEET THE AASHTO STANDARD SPECIFICATIONS FOR STRUCTURAL SUPPORTS FOR HIGHWAY SIGNS, LUMINAIRES AND TRAFFIC SIGNALS, 4th EDITION (2001) WITH 2003 AND 2006 INTERIMS.
22. CONTRACTOR SHALL PROVIDE CONTROLLER AND LOCAL RADIO TO THE DEPARTMENT'S TRAFFIC ENGINEERING STAFF AT THE MAINTENANCE DIVISION, FOR SETUP AND TIMING BEFORE IT IS PLACED INTO OPERATION.
23. THE LOCAL RADIO WITH ANTENNA SHALL BE COMPATIBLE WITH THE EXISTING CLOSED LOOP COORDINATION SYSTEM IN THE CITY. THE MASTER CONTROLLER IS LOCATED AT THE INTERSECTION OF T.P. WHITE AND MADDEN DR.

STATE OF ARKANSAS
REGISTERED PROFESSIONAL ENGINEER
No. 9808
JAMES L. BARR
4/8/14

GENERAL AND TRAFFIC SIGNAL NOTES

r061276.ind.dgn 4/8/2014 11:30:45 AM

DATE REVISED	DATE FILMED	DATE REVISED	DATE FILMED	FED.RD. DIST.NO.	STATE	FED.AID PROJ.NO.	SHEET NO.	TOTAL SHEETS
				6	ARK.			
				JOB NO.		061276	6	438

(2) TYPICAL SECTIONS OF IMPROVEMENT

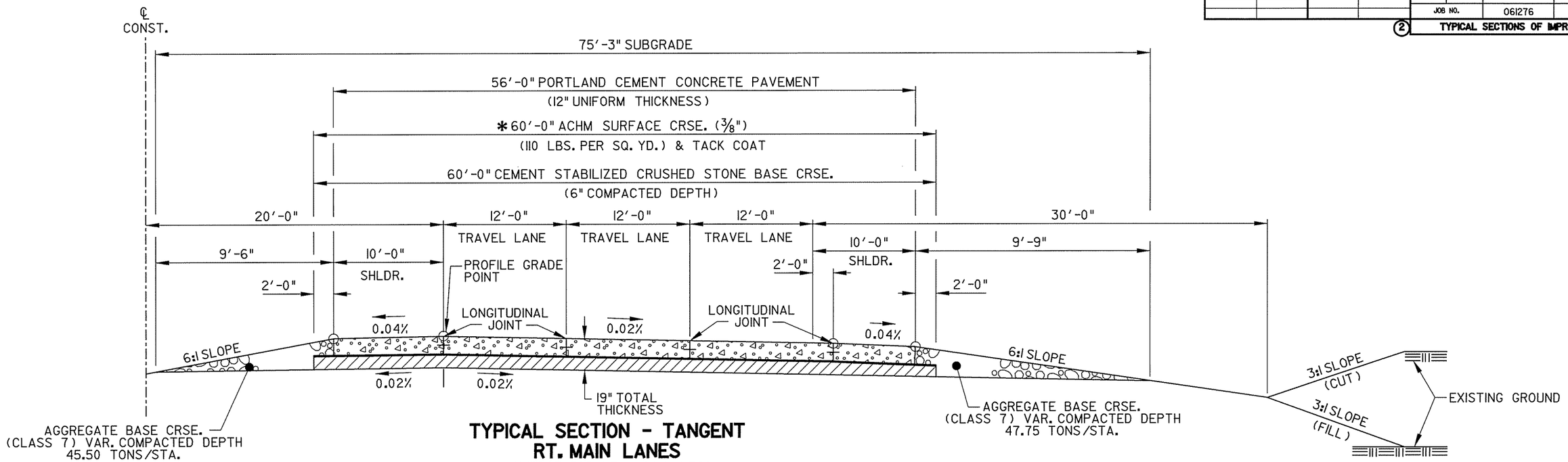

TYPICAL SECTION - TANGENT
RT. MAIN LANES
(REVERSE FOR LT. MAIN LANES)

*DENSITY REQUIREMENTS WAIVED

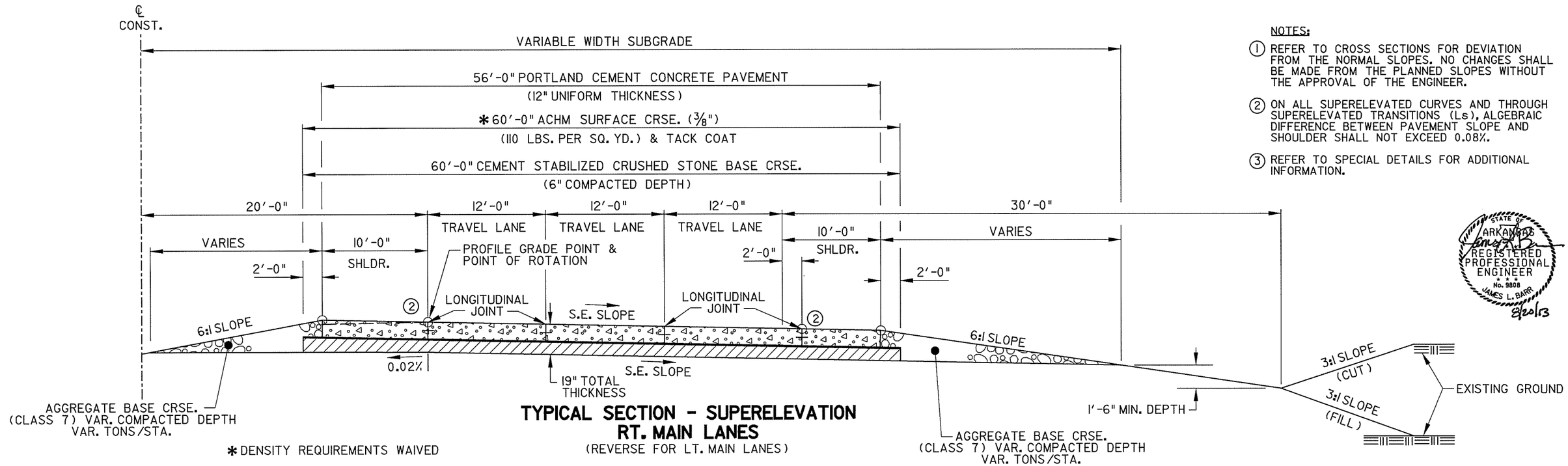

TYPICAL SECTION - SUPERELEVATION
RT. MAIN LANES
(REVERSE FOR LT. MAIN LANES)

*DENSITY REQUIREMENTS WAIVED

NOTES:

1. REFER TO CROSS SECTIONS FOR DEVIATION FROM THE NORMAL SLOPES. NO CHANGES SHALL BE MADE FROM THE PLANNED SLOPES WITHOUT THE APPROVAL OF THE ENGINEER.
2. ON ALL SUPERELEVATED CURVES AND THROUGH SUPERELEVATED TRANSITIONS (Ls), ALGEBRAIC DIFFERENCE BETWEEN PAVEMENT SLOPE AND SHOULDER SHALL NOT EXCEED 0.08%.
3. REFER TO SPECIAL DETAILS FOR ADDITIONAL INFORMATION.

STATE OF ARKANSAS
REGISTERED PROFESSIONAL ENGINEER
No. 9808
JAMES L. BARR
8/20/13

DATE REVISED	DATE FILMED	DATE REVISED	DATE FILMED	FED.RD. DIST.NO.	STATE	FED.AID PROJ.NO.	SHEET NO.	TOTAL SHEETS
				6	ARK.			
				JOB NO.		061276	7	438

(2) TYPICAL SECTIONS OF IMPROVEMENT

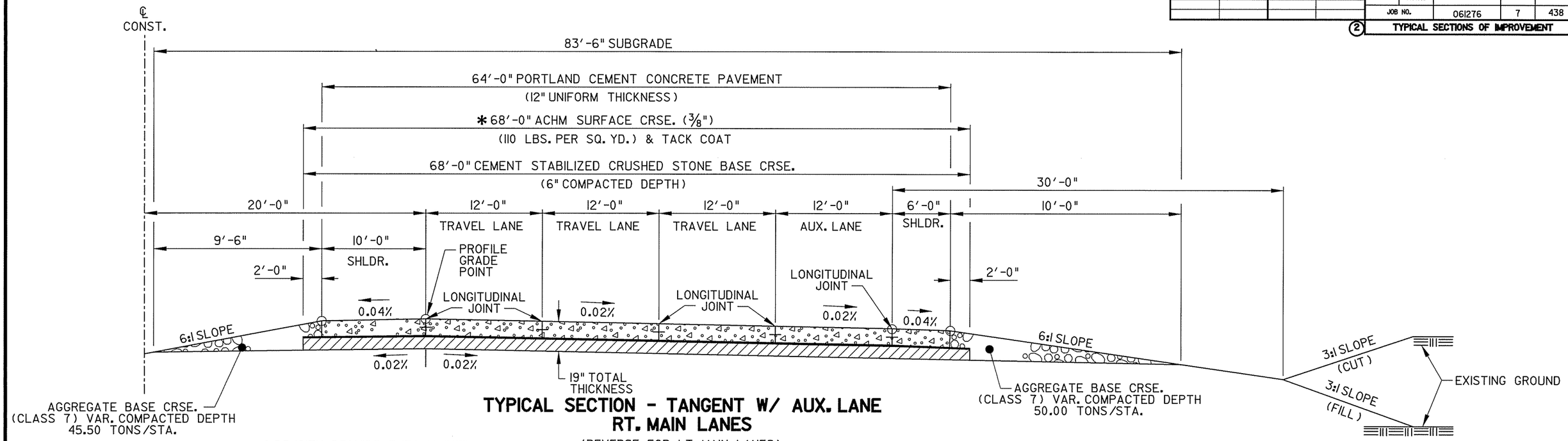

TYPICAL SECTION - TANGENT W/ AUX. LANE
RT. MAIN LANES
(REVERSE FOR LT. MAIN LANES)

* DENSITY REQUIREMENTS WAIVED

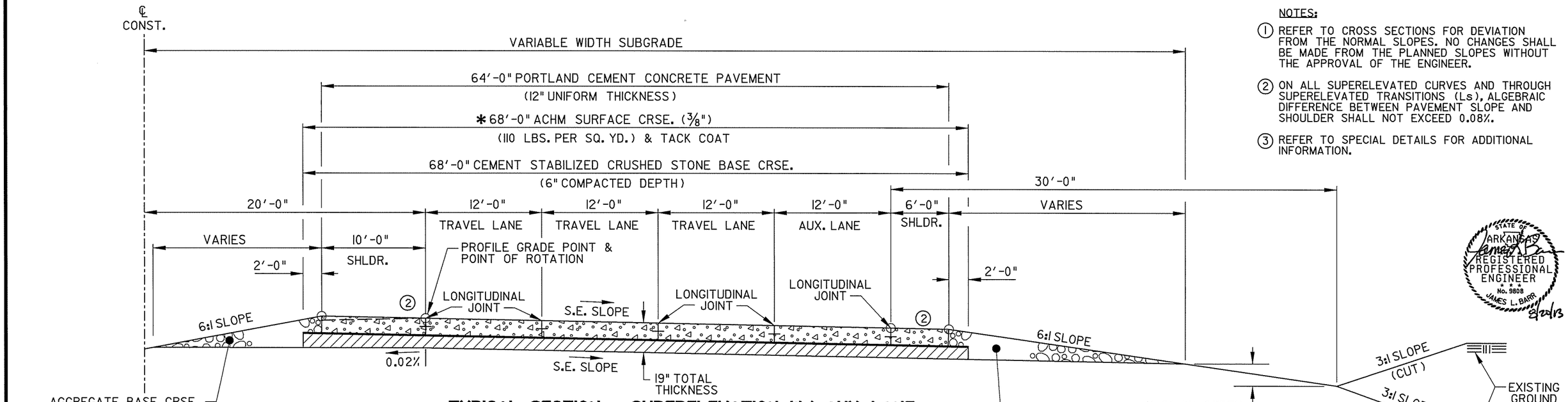

TYPICAL SECTION - SUPERELEVATION W/ AUX. LANE
RT. MAIN LANES
(REVERSE FOR LT. MAIN LANES)

* DENSITY REQUIREMENTS WAIVED

NOTES:

(1) REFER TO CROSS SECTIONS FOR DEVIATION FROM THE NORMAL SLOPES. NO CHANGES SHALL BE MADE FROM THE PLANNED SLOPES WITHOUT THE APPROVAL OF THE ENGINEER.

(2) ON ALL SUPERELEVATED CURVES AND THROUGH SUPERELEVATED TRANSITIONS (Ls), ALGEBRAIC DIFFERENCE BETWEEN PAVEMENT SLOPE AND SHOULDER SHALL NOT EXCEED 0.08%.

(3) REFER TO SPECIAL DETAILS FOR ADDITIONAL INFORMATION.

STATE OF ARKANSAS
REGISTERED PROFESSIONAL ENGINEER
No. 9808
JAMES L. BARR
9/20/13

DATE REVISED	DATE FILMED	DATE REVISED	DATE FILMED	FED.RD. DIST.NO.	STATE	FED.AID PROJ.NO.	SHEET NO.	TOTAL SHEETS
				6	ARK.			
				JOB NO.		061276	8	438

(2) TYPICAL SECTIONS OF IMPROVEMENT

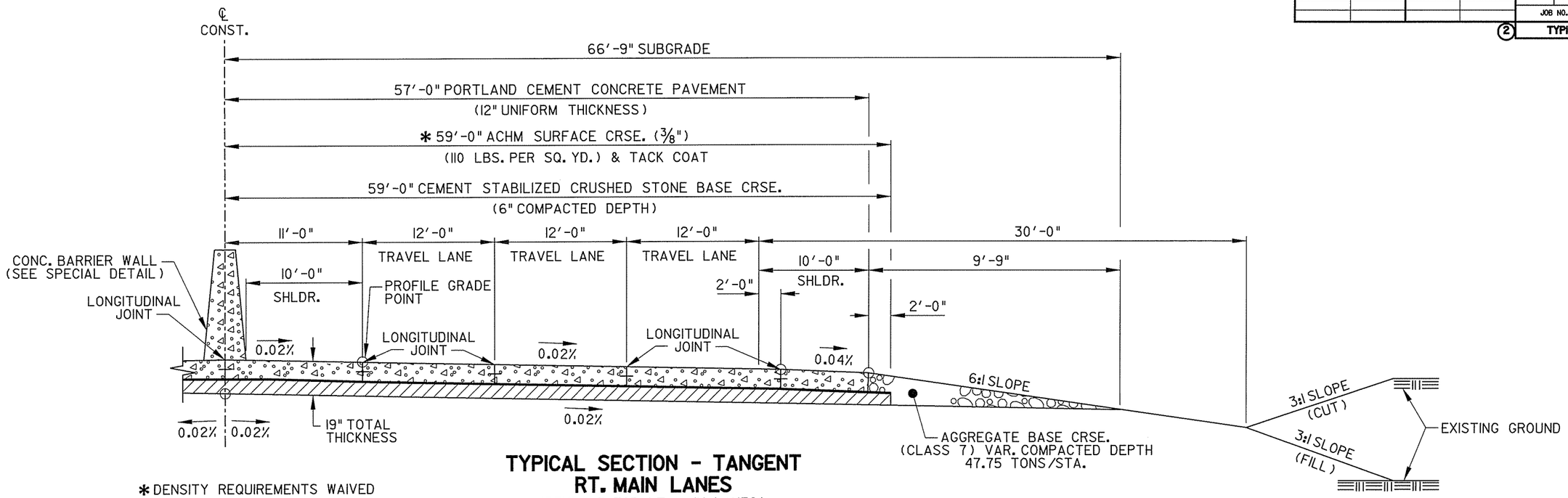

TYPICAL SECTION - TANGENT
RT. MAIN LANES
(REVERSE FOR LT. MAIN LANES)

* DENSITY REQUIREMENTS WAIVED

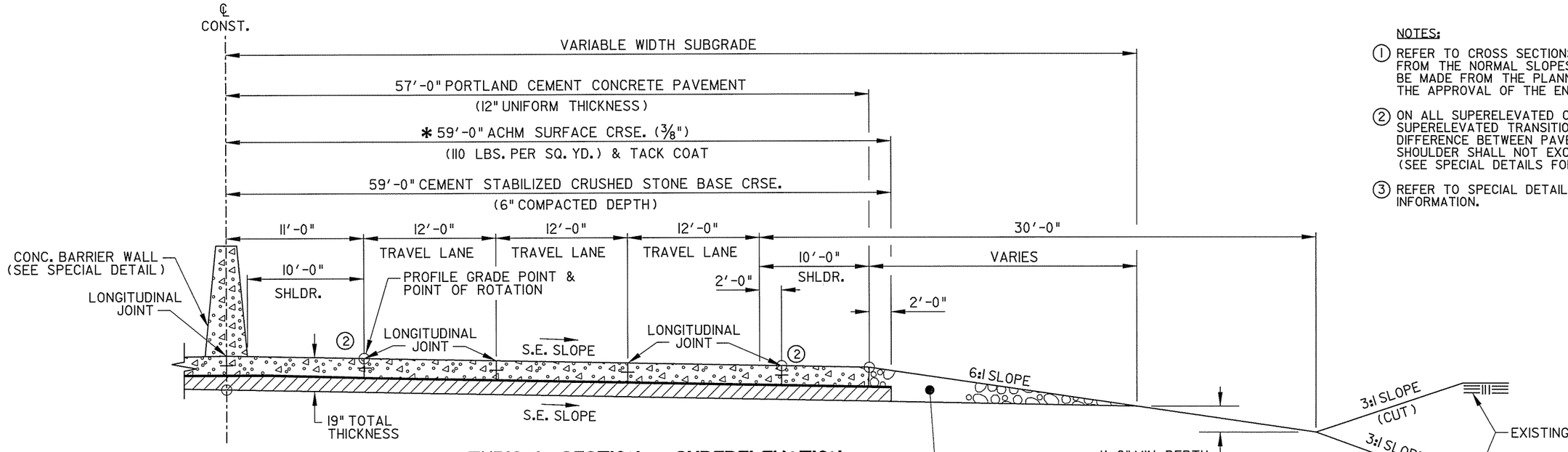

TYPICAL SECTION - SUPERELEVATION
RT. MAIN LANES
(REVERSE FOR LT. MAIN LANES)

* DENSITY REQUIREMENTS WAIVED

NOTES:

(1) REFER TO CROSS SECTIONS FOR DEVIATION FROM THE NORMAL SLOPES. NO CHANGES SHALL BE MADE FROM THE PLANNED SLOPES WITHOUT THE APPROVAL OF THE ENGINEER.

(2) ON ALL SUPERELEVATED CURVES AND THROUGH SUPERELEVATED TRANSITIONS (Ls), ALGEBRAIC DIFFERENCE BETWEEN PAVEMENT SLOPE AND SHOULDER SHALL NOT EXCEED 0.08%. (SEE SPECIAL DETAILS FOR ADDITIONAL INFORMATION)

(3) REFER TO SPECIAL DETAILS FOR ADDITIONAL INFORMATION.

STATE OF ARKANSAS
REGISTERED PROFESSIONAL ENGINEER
No. 9808
JAMES L. BARR
8/20/13

DATE REVISED	DATE FILMED	DATE REVISED	DATE FILMED	FED.RD. DIST.NO.	STATE	FED.AID PROJ.NO.	SHEET NO.	TOTAL SHEETS
				6	ARK.			
				JOB NO.		061276	9	438

(2) TYPICAL SECTIONS OF IMPROVEMENT

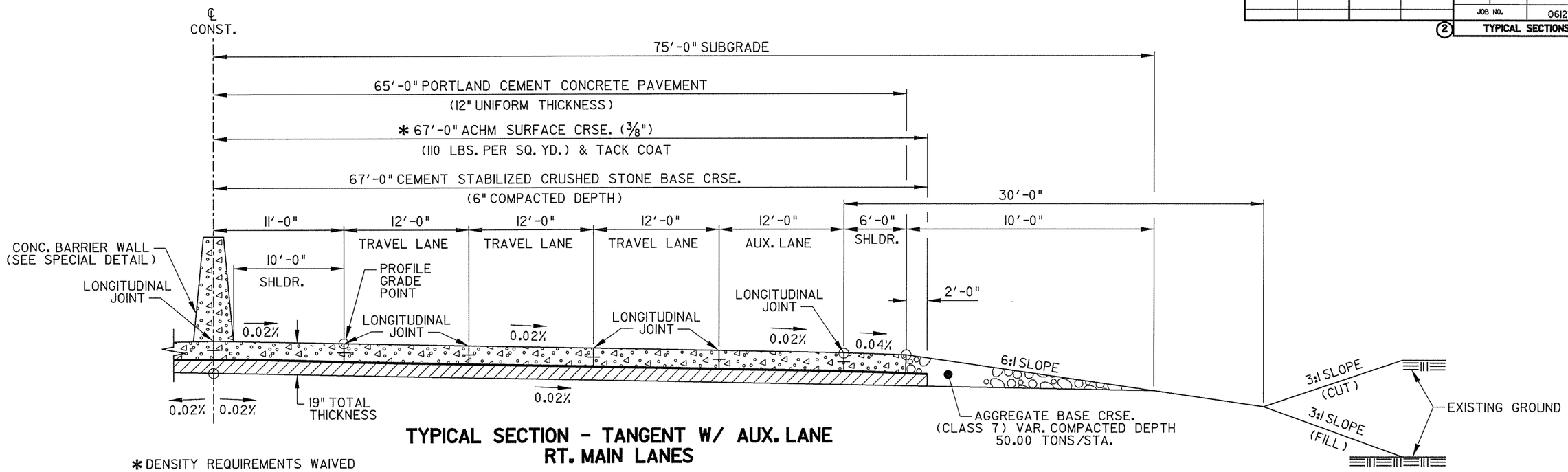

TYPICAL SECTION - TANGENT W/ AUX. LANE RT. MAIN LANES

(REVERSE FOR LT. MAIN LANES)

* DENSITY REQUIREMENTS WAIVED

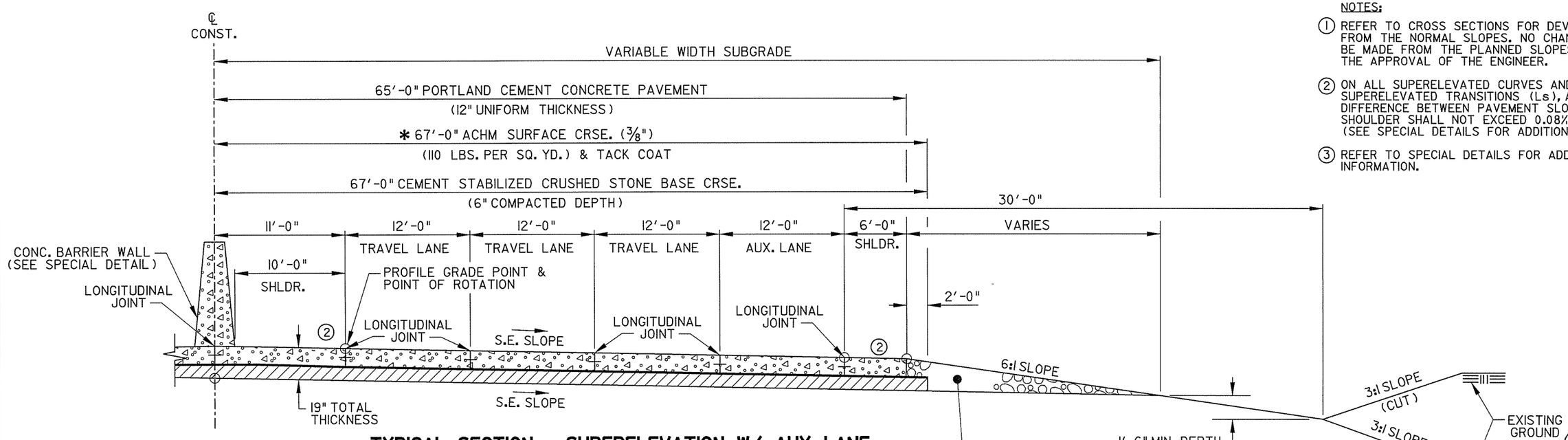

TYPICAL SECTION - SUPERELEVATION W/ AUX. LANE RT. MAIN LANES

(REVERSE FOR LT. MAIN LANES)

* DENSITY REQUIREMENTS WAIVED

NOTES:

(1) REFER TO CROSS SECTIONS FOR DEVIATION FROM THE NORMAL SLOPES. NO CHANGES SHALL BE MADE FROM THE PLANNED SLOPES WITHOUT THE APPROVAL OF THE ENGINEER.

(2) ON ALL SUPERELEVATED CURVES AND THROUGH SUPERELEVATED TRANSITIONS (Ls), ALGEBRAIC DIFFERENCE BETWEEN PAVEMENT SLOPE AND SHOULDER SHALL NOT EXCEED 0.08%. (SEE SPECIAL DETAILS FOR ADDITIONAL INFORMATION)

(3) REFER TO SPECIAL DETAILS FOR ADDITIONAL INFORMATION.

STATE OF ARKANSAS REGISTERED PROFESSIONAL ENGINEER No. 9808 JAMES L. BARR 8/23/13

DATE REVISED	DATE FILMED	DATE REVISED	DATE FILMED	FED.RD. DIST.NO.	STATE	FED.AID PROJ.NO.	SHEET NO.	TOTAL SHEETS
				6	ARK.			
				JOB NO.		061276	10	438

(2) TYPICAL SECTIONS OF IMPROVEMENT

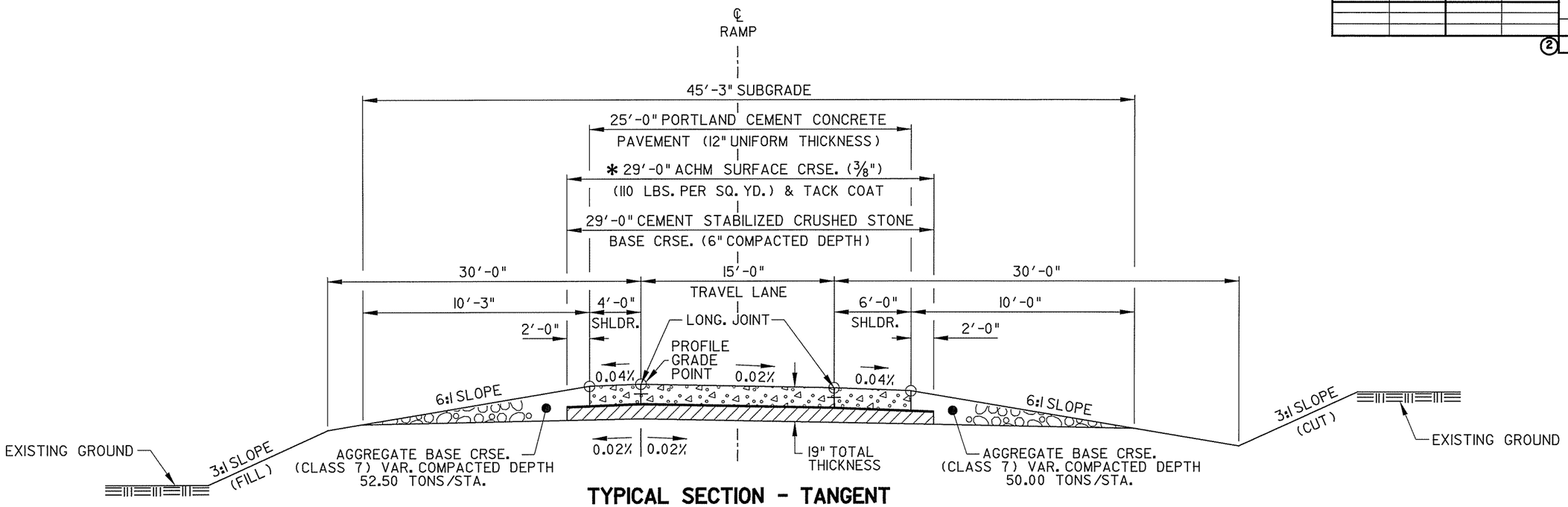

TYPICAL SECTION - TANGENT INTERCHANGE RAMP

(SHOWN IN DIRECTION OF TRAFFIC)

*DENSITY REQUIREMENTS WAIVED

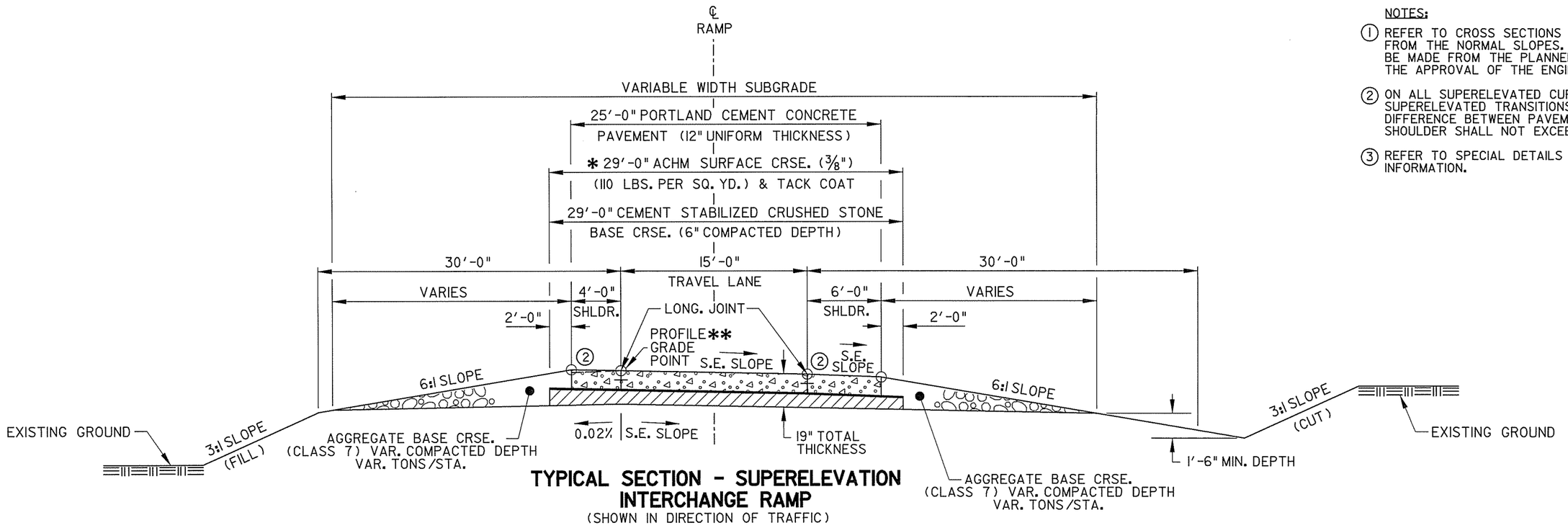

TYPICAL SECTION - SUPERELEVATION INTERCHANGE RAMP

(SHOWN IN DIRECTION OF TRAFFIC)

*DENSITY REQUIREMENTS WAIVED

**AND POINT OF ROTATION

NOTES:

(1) REFER TO CROSS SECTIONS FOR DEVIATION FROM THE NORMAL SLOPES. NO CHANGES SHALL BE MADE FROM THE PLANNED SLOPES WITHOUT THE APPROVAL OF THE ENGINEER.

(2) ON ALL SUPERELEVATED CURVES AND THROUGH SUPERELEVATED TRANSITIONS (Ls), ALGEBRAIC DIFFERENCE BETWEEN PAVEMENT SLOPE AND SHOULDER SHALL NOT EXCEED 0.08%.

(3) REFER TO SPECIAL DETAILS FOR ADDITIONAL INFORMATION.

STATE OF ARKANSAS REGISTERED PROFESSIONAL ENGINEER No. 9808 JAMES L. BARR 8/20/13

DATE REVISED	DATE FILMED	DATE REVISED	DATE FILMED	FED.RD. DIST.NO.	STATE	FED.AID PROJ.NO.	SHEET NO.	TOTAL SHEETS
				6	ARK.			
				JOB NO.		061276	11	438

(2) **TYPICAL SECTIONS OF IMPROVEMENT**

NOTES:

(1) REFER TO CROSS SECTIONS FOR DEVIATION FROM THE NORMAL SLOPES. NO CHANGES SHALL BE MADE FROM THE PLANNED SLOPES WITHOUT THE APPROVAL OF THE ENGINEER.

(2) REFER TO SPECIAL DETAILS FOR ADDITIONAL INFORMATION.

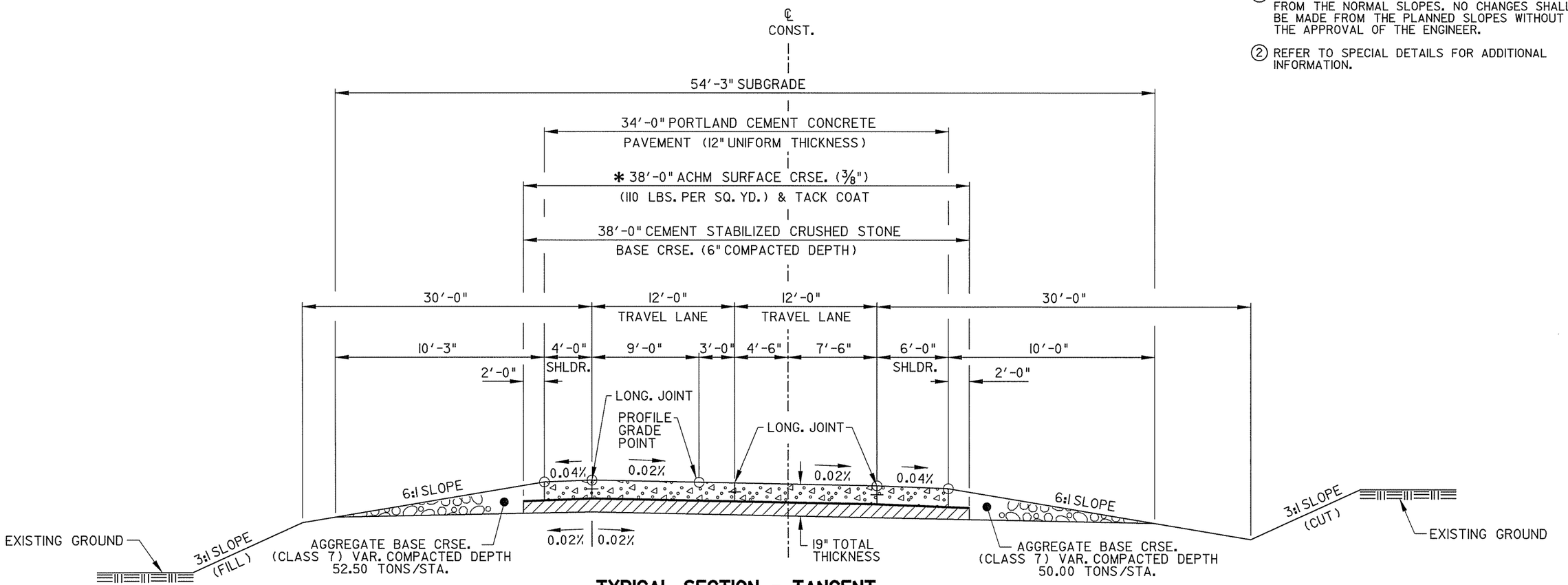

TYPICAL SECTION - TANGENT TWO LANE INTERCHANGE RAMP REDMOND RD.

(SHOWN IN DIRECTION OF TRAFFIC)

* DENSITY REQUIREMENTS WAIVED

STATE OF ARKANSAS
REGISTERED PROFESSIONAL ENGINEER
No. 9808
JAMES L. BARR
8/20/13

DATE REVISED	DATE FILMED	DATE REVISED	DATE FILMED	FED.RD. DIST.NO.	STATE	FED.AID PROJ.NO.	SHEET NO.	TOTAL SHEETS
				6	ARK.			
				JOB NO.		061276	12	438
				(2)	TYPICAL SECTIONS OF IMPROVEMENT			

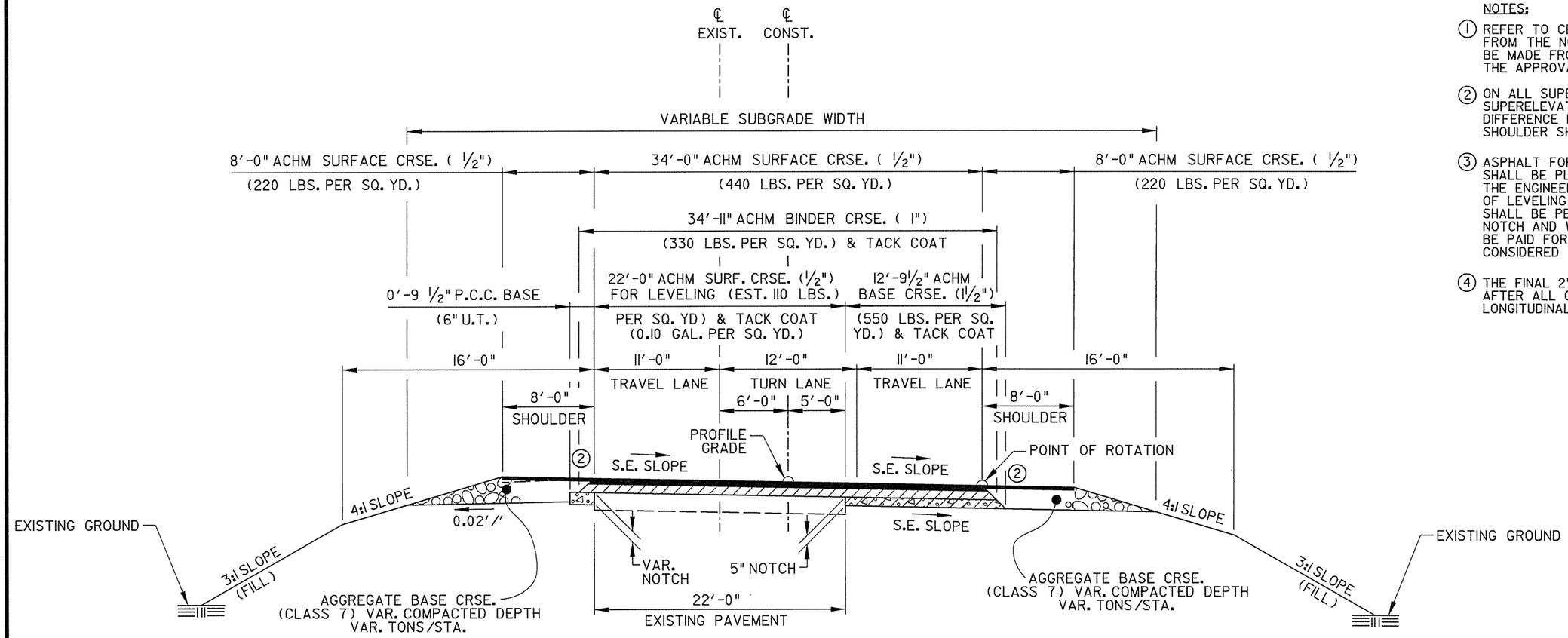

TYPICAL SECTION - SUPERELEVATION
REDMOND ROAD

NOTES:

(1) REFER TO CROSS SECTIONS FOR DEVIATION FROM THE NORMAL SLOPES. NO CHANGES SHALL BE MADE FROM THE PLANNED SLOPES WITHOUT THE APPROVAL OF THE ENGINEER.

(2) ON ALL SUPERELEVATED CURVES AND THROUGH SUPERELEVATED TRANSITIONS (Ls), ALGEBRAIC DIFFERENCE BETWEEN PAVEMENT SLOPE AND SHOULDER SHALL NOT EXCEED 0.08%.

(3) ASPHALT FOR LEVELING OF EXISTING PAVEMENT SHALL BE PLACED ONLY IF AND WHERE DIRECTED BY THE ENGINEER. CALCULATIONS FOR THE AMOUNT OF LEVELING AND/OR LEVELING OPERATIONS SHALL BE PERFORMED BEFORE CONSTRUCTING NOTCH AND WIDENING. CALCULATIONS WILL NOT BE PAID FOR DIRECTLY, BUT PAYMENT WILL BE CONSIDERED INCLUDED IN THE VARIOUS PAY ITEMS.

(4) THE FINAL 2" OF SURFACE COURSE IS TO BE PLACED AFTER ALL OTHER COURSES HAVE BEEN LAID. LONGITUDINAL JOINTS SHALL BE AT LANE LINES.

STATE OF ARKANSAS
REGISTERED PROFESSIONAL ENGINEER
No. 9808
JAMES L. BARR
8/2/13

DATE REVISED	DATE FILMED	DATE REVISED	DATE FILMED	FED.RD. DIST.NO.	STATE	FED.AID PROJ.NO.	SHEET NO.	TOTAL SHEETS
				6	ARK.			
				JOB NO.		061276	13	438

(2) TYPICAL SECTIONS OF IMPROVEMENT

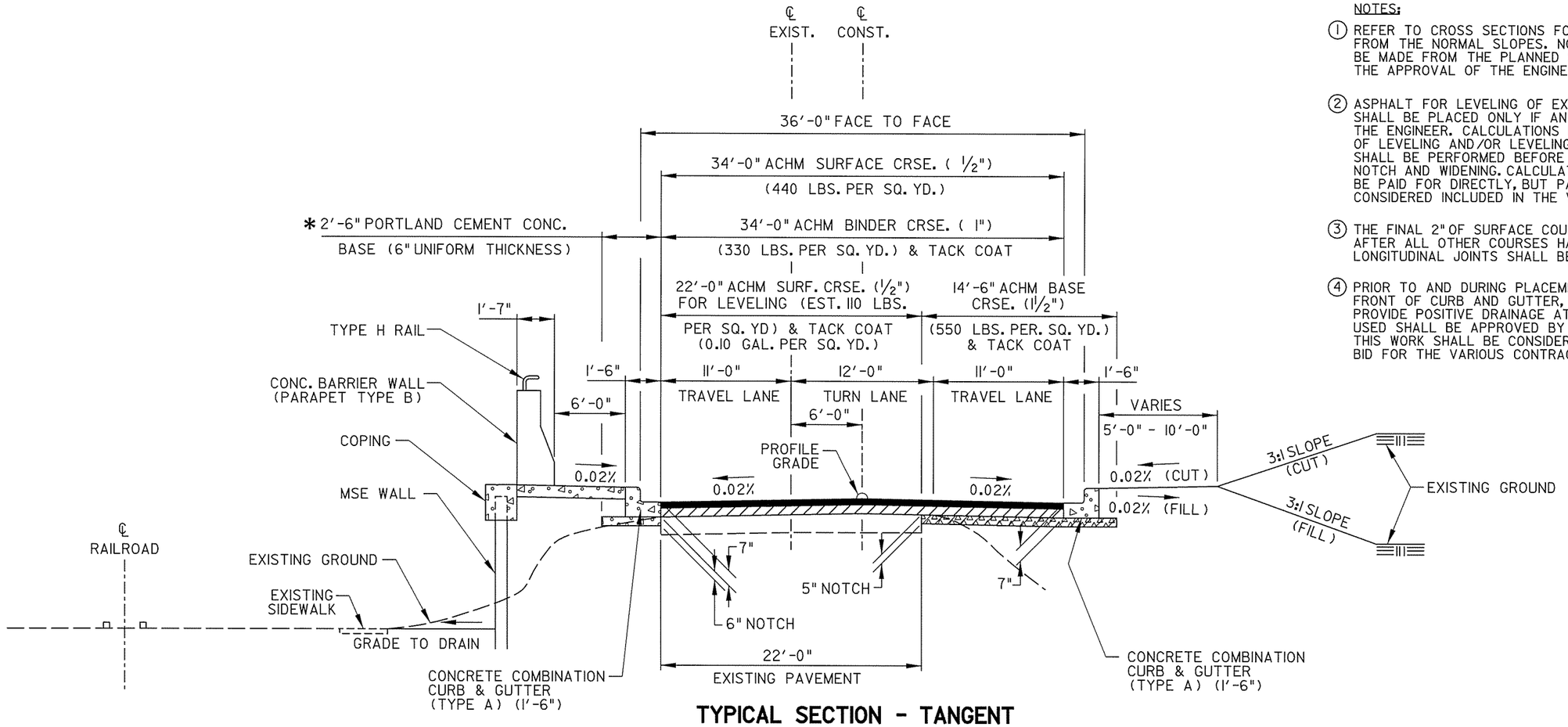

TYPICAL SECTION - TANGENT
REDMOND ROAD

*SEE SPECIAL DETAILS FOR MESH FABRIC TYPE 3

NOTES:

(1) REFER TO CROSS SECTIONS FOR DEVIATION FROM THE NORMAL SLOPES. NO CHANGES SHALL BE MADE FROM THE PLANNED SLOPES WITHOUT THE APPROVAL OF THE ENGINEER.

(2) ASPHALT FOR LEVELING OF EXISTING PAVEMENT SHALL BE PLACED ONLY IF AND WHERE DIRECTED BY THE ENGINEER. CALCULATIONS FOR THE AMOUNT OF LEVELING AND/OR LEVELING OPERATIONS SHALL BE PERFORMED BEFORE CONSTRUCTING NOTCH AND WIDENING. CALCULATIONS WILL NOT BE PAID FOR DIRECTLY, BUT PAYMENT WILL BE CONSIDERED INCLUDED IN THE VARIOUS PAY ITEMS.

(3) THE FINAL 2" OF SURFACE COURSE IS TO BE PLACED AFTER ALL OTHER COURSES HAVE BEEN LAID. LONGITUDINAL JOINTS SHALL BE AT LANE LINES.

(4) PRIOR TO AND DURING PLACEMENT OF PAVEMENT IN FRONT OF CURB AND GUTTER, THE CONTRACTOR SHALL PROVIDE POSITIVE DRAINAGE AT ALL TIMES. THE METHOD(S) USED SHALL BE APPROVED BY THE ENGINEER. PAYMENT FOR THIS WORK SHALL BE CONSIDERED INCLUDED IN THE PRICE BID FOR THE VARIOUS CONTRACT ITEMS.

STATE OF ARKANSAS
REGISTERED PROFESSIONAL ENGINEER
No. 9808
JAMES L. BARR
8/20/13

DATE REVISED	DATE FILMED	DATE REVISED	DATE FILMED	FED.RD. DIST.NO.	STATE	FED.AID PROJ.NO.	SHEET NO.	TOTAL SHEETS
				6	ARK.			
				JOB NO.		061276	14	438

(2) TYPICAL SECTIONS OF IMPROVEMENT

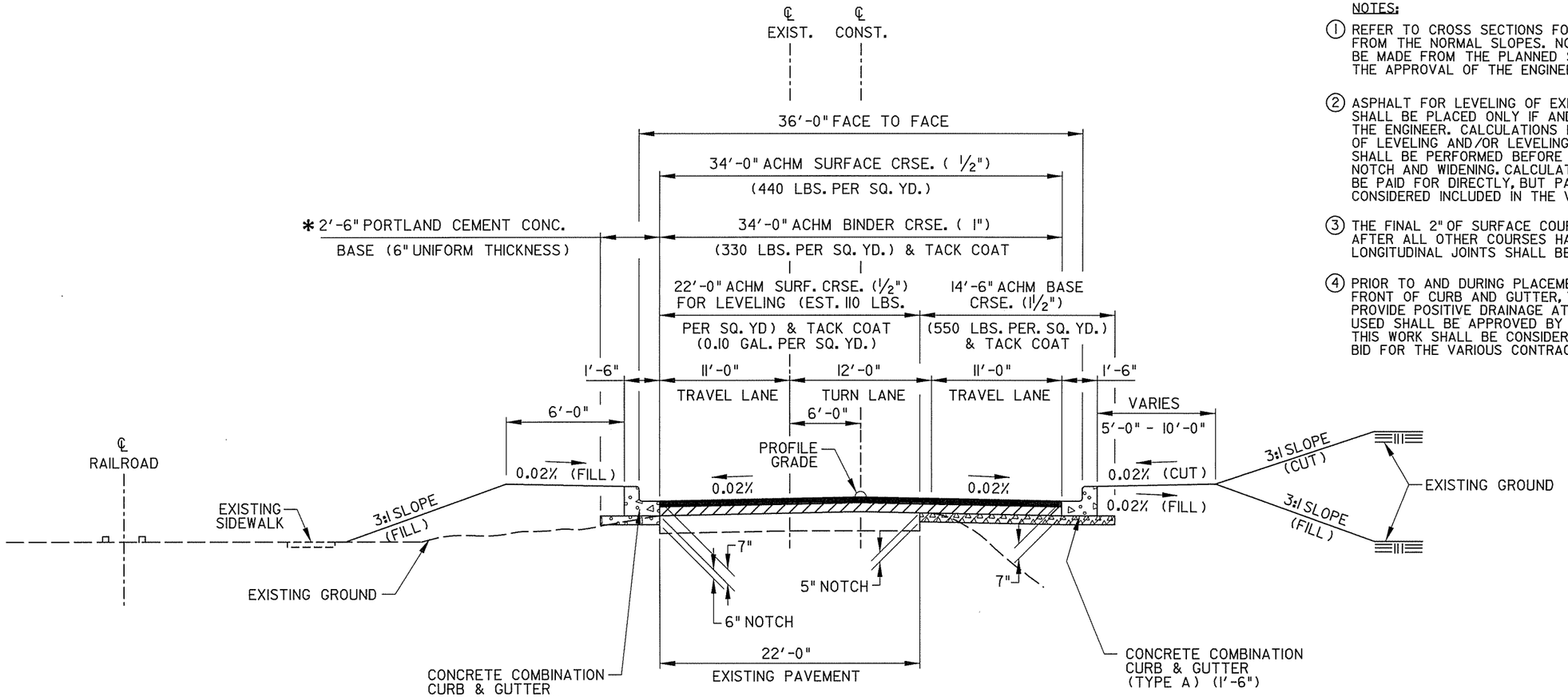

TYPICAL SECTION - TANGENT
REDMOND ROAD

NOTES:

(1) REFER TO CROSS SECTIONS FOR DEVIATION FROM THE NORMAL SLOPES. NO CHANGES SHALL BE MADE FROM THE PLANNED SLOPES WITHOUT THE APPROVAL OF THE ENGINEER.

(2) ASPHALT FOR LEVELING OF EXISTING PAVEMENT SHALL BE PLACED ONLY IF AND WHERE DIRECTED BY THE ENGINEER. CALCULATIONS FOR THE AMOUNT OF LEVELING AND/OR LEVELING OPERATIONS SHALL BE PERFORMED BEFORE CONSTRUCTING NOTCH AND WIDENING. CALCULATIONS WILL NOT BE PAID FOR DIRECTLY, BUT PAYMENT WILL BE CONSIDERED INCLUDED IN THE VARIOUS PAY ITEMS.

(3) THE FINAL 2" OF SURFACE COURSE IS TO BE PLACED AFTER ALL OTHER COURSES HAVE BEEN LAID. LONGITUDINAL JOINTS SHALL BE AT LANE LINES.

(4) PRIOR TO AND DURING PLACEMENT OF PAVEMENT IN FRONT OF CURB AND GUTTER, THE CONTRACTOR SHALL PROVIDE POSITIVE DRAINAGE AT ALL TIMES. THE METHOD(S) USED SHALL BE APPROVED BY THE ENGINEER. PAYMENT FOR THIS WORK SHALL BE CONSIDERED INCLUDED IN THE PRICE BID FOR THE VARIOUS CONTRACT ITEMS.

*SEE SPECIAL DETAILS FOR MESH FABRIC TYPE 3

STATE OF ARKANSAS REGISTERED PROFESSIONAL ENGINEER No. 9808 JAMES L. BARR 8/20/13

TYPICAL SECTIONS OF IMPROVEMENT

typical sections.dgn 8/18/2013 6:06:25 PM

DATE REVISED	DATE FILMED	DATE REVISED	DATE FILMED	FED.RD. DIST.NO.	STATE	FED.AID PROJ.NO.	SHEET NO.	TOTAL SHEETS
				6	ARK.			
				JOB NO.		061276	15	438

(2) **TYPICAL SECTIONS OF IMPROVEMENT**

NOTES:

(1) REFER TO CROSS SECTIONS FOR DEVIATION FROM THE NORMAL SLOPES. NO CHANGES SHALL BE MADE FROM THE PLANNED SLOPES WITHOUT THE APPROVAL OF THE ENGINEER.

(2) ASPHALT FOR LEVELING OF EXISTING PAVEMENT SHALL BE PLACED IF AND WHERE DIRECTED BY THE ENGINEER. CALCULATIONS FOR THE AMOUNT OF LEVELING AND/OR LEVELING OPERATIONS SHALL BE PERFORMED BEFORE CONSTRUCTING NOTCH AND WIDENING. CALCULATIONS WILL NOT BE PAID FOR DIRECTLY, BUT PAYMENT WILL BE CONSIDERED INCLUDED IN THE VARIOUS PAY ITEMS. COLD MILLING WILL BE REQUIRED IF AND WHERE DIRECTED BY THE ENGINEER TO ACHIEVE REQUIRED DEPTH OF FINAL SURFACE COURSE.

(3) THE FINAL 2" OF SURFACE COURSE IS TO BE PLACED AFTER ALL OTHER COURSES HAVE BEEN LAID. LONGITUDINAL JOINTS SHALL BE AT LANE LINES.

(4) PRIOR TO AND DURING PLACEMENT OF PAVEMENT IN FRONT OF CURB AND GUTTER, THE CONTRACTOR SHALL PROVIDE POSITIVE DRAINAGE AT ALL TIMES. THE METHOD(S) USED SHALL BE APPROVED BY THE ENGINEER. PAYMENT FOR THIS WORK SHALL BE CONSIDERED INCLUDED IN THE PRICE BID FOR THE VARIOUS CONTRACT ITEMS.

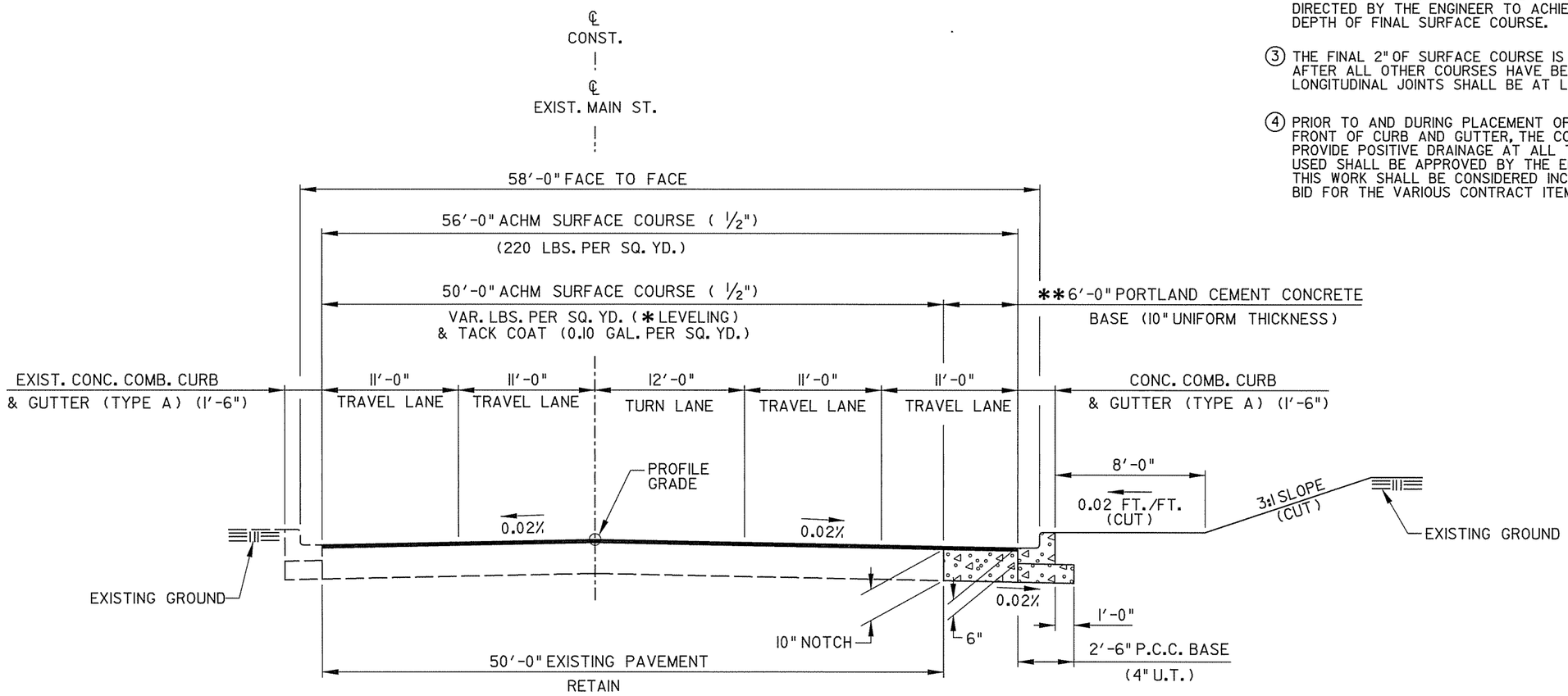

TYPICAL SECTION - TANGENT MAIN STREET

*TO BE USED IF AND WHERE DIRECTED BY THE ENGINEER

**SEE SPECIAL DETAILS FOR MESH FABRIC TYPE 3

STATE OF ARKANSAS
REGISTERED PROFESSIONAL ENGINEER
No. 9808
JAMES L. BARR
8/20/13

DATE REVISED	DATE FILMED	DATE REVISED	DATE FILMED	FED.RD. DIST.NO.	STATE	FED.AID PROJ.NO.	SHEET NO.	TOTAL SHEETS
				6	ARK.			
				JOB NO.		061276	16	438

(2) TYPICAL SECTIONS OF IMPROVEMENT

NOTES:

(1) REFER TO CROSS SECTIONS FOR DEVIATION FROM THE NORMAL SLOPES. NO CHANGES SHALL BE MADE FROM THE PLANNED SLOPES WITHOUT THE APPROVAL OF THE ENGINEER.

(2) ASPHALT FOR LEVELING OF EXISTING PAVEMENT SHALL BE PLACED IF AND WHERE DIRECTED BY THE ENGINEER. CALCULATIONS FOR THE AMOUNT OF LEVELING AND/OR LEVELING OPERATIONS SHALL BE PERFORMED BEFORE CONSTRUCTING NOTCH AND WIDENING. CALCULATIONS WILL NOT BE PAID FOR DIRECTLY, BUT PAYMENT WILL BE CONSIDERED INCLUDED IN THE VARIOUS PAY ITEMS. COLD MILLING WILL BE REQUIRED IF AND WHERE DIRECTED BY THE ENGINEER TO ACHIEVE REQUIRED DEPTH OF FINAL SURFACE COURSE.

(3) THE FINAL 2" OF SURFACE COURSE IS TO BE PLACED AFTER ALL OTHER COURSES HAVE BEEN LAID. LONGITUDINAL JOINTS SHALL BE AT LANE LINES.

(4) PRIOR TO AND DURING PLACEMENT OF PAVEMENT IN FRONT OF CURB AND GUTTER, THE CONTRACTOR SHALL PROVIDE POSITIVE DRAINAGE AT ALL TIMES. THE METHOD(S) USED SHALL BE APPROVED BY THE ENGINEER. PAYMENT FOR THIS WORK SHALL BE CONSIDERED INCLUDED IN THE PRICE BID FOR THE VARIOUS CONTRACT ITEMS.

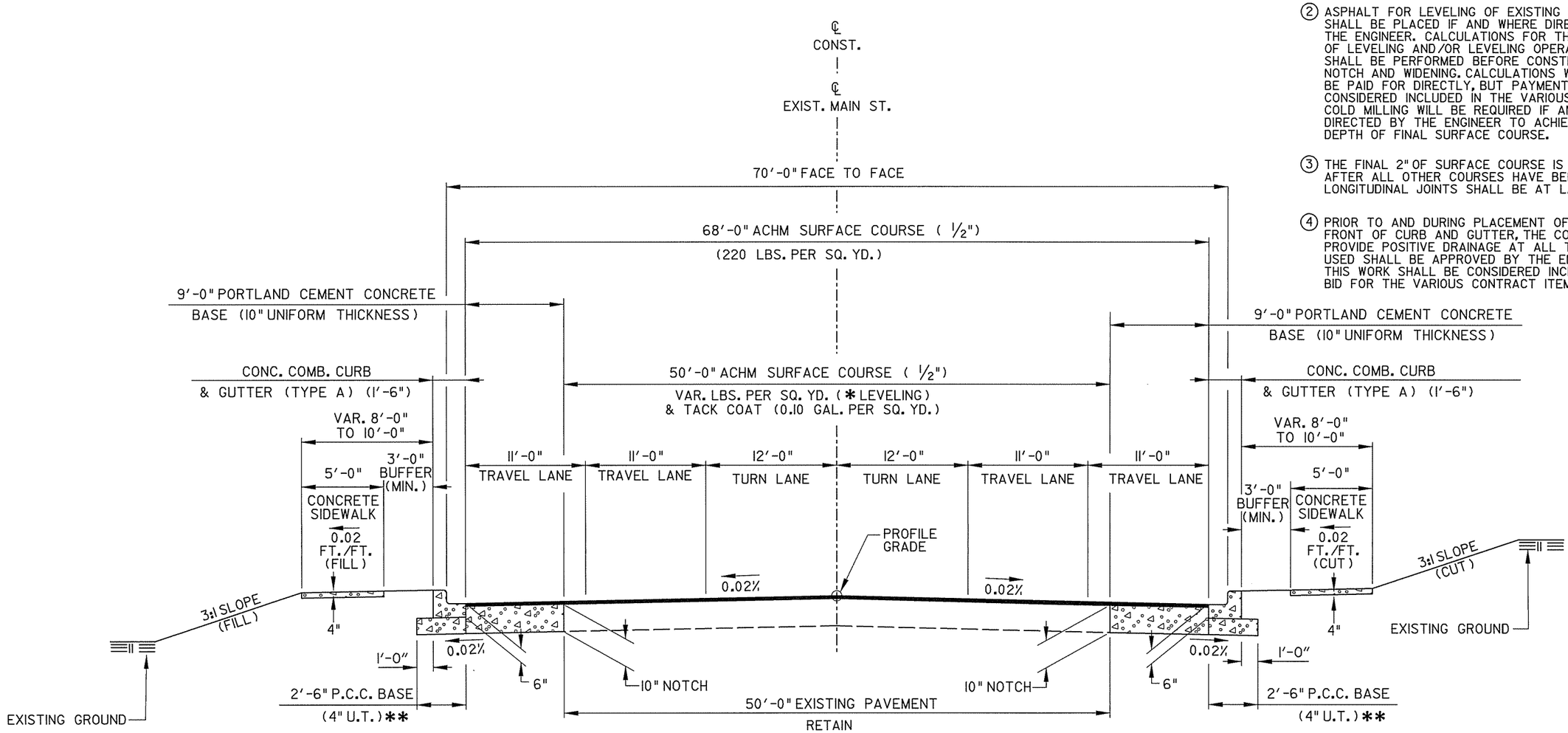

TYPICAL SECTION - TANGENT MAIN STREET

*TO BE USED IF AND WHERE DIRECTED BY THE ENGINEER

**SEE SPECIAL DETAILS FOR MESH FABRIC TYPE 3

STATE OF ARKANSAS
REGISTERED PROFESSIONAL ENGINEER
No. 9808
JAMES L. BARR
8/20/13

TYPICAL SECTIONS OF IMPROVEMENT

typical sections.dgn 8/18/2013 6:06:25 PM

DATE REVISED	DATE FILMED	DATE REVISED	DATE FILMED

FED.RD. DIST.NO.	STATE	FED.AID PROJ.NO.	SHEET NO.	TOTAL SHEETS
6	ARK.			
JOB NO.		061276	17	438

(2) **TYPICAL SECTIONS OF IMPROVEMENT**

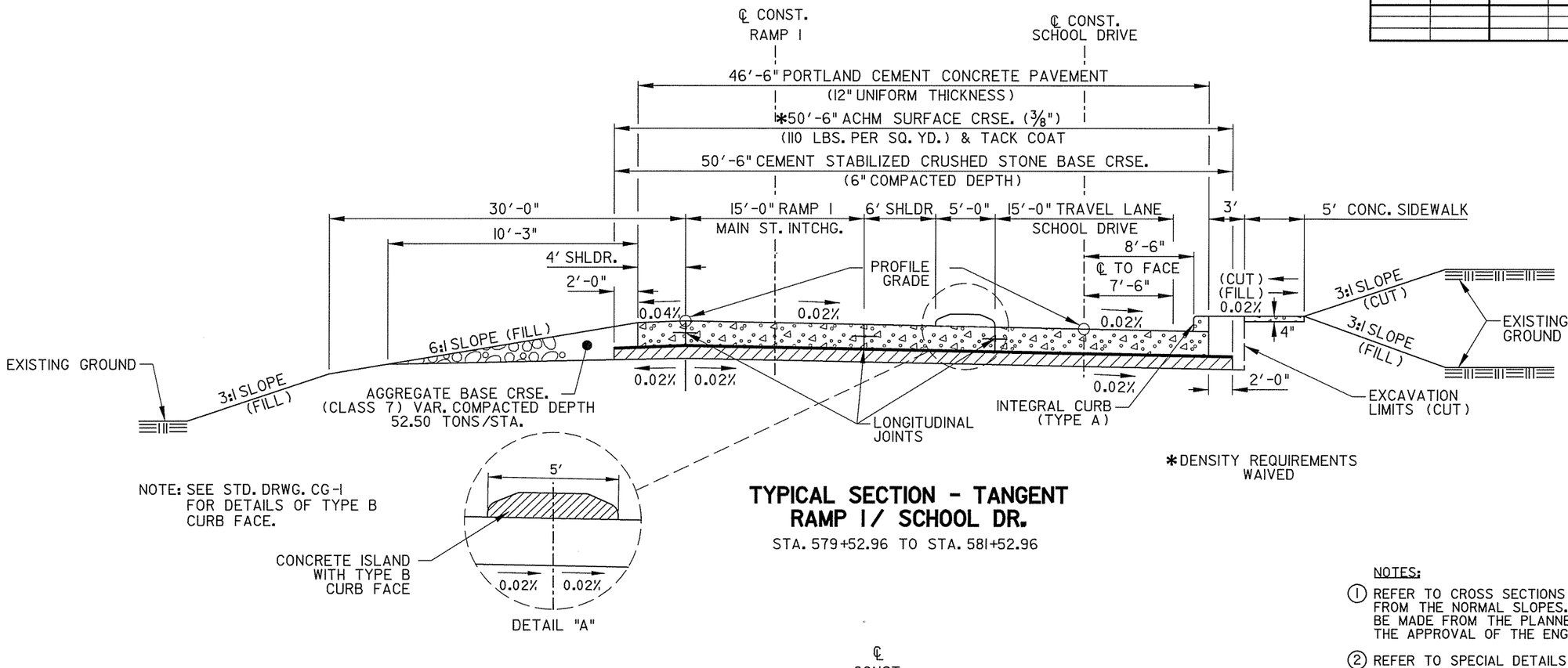

*DENSITY REQUIREMENTS WAIVED

NOTE: SEE STD. DRWG. CG-1 FOR DETAILS OF TYPE B CURB FACE.

DETAIL "A"

TYPICAL SECTION - TANGENT RAMP I / SCHOOL DR.

STA. 579+52.96 TO STA. 581+52.96

NOTES:

(1) REFER TO CROSS SECTIONS FOR DEVIATION FROM THE NORMAL SLOPES. NO CHANGES SHALL BE MADE FROM THE PLANNED SLOPES WITHOUT THE APPROVAL OF THE ENGINEER.

(2) REFER TO SPECIAL DETAILS FOR ADDITIONAL INFORMATION.

(3) PRIOR TO AND DURING PLACEMENT OF PAVEMENT IN FRONT OF CURB AND GUTTER, THE CONTRACTOR SHALL PROVIDE POSITIVE DRAINAGE AT ALL TIMES. THE METHOD(S) USED SHALL BE APPROVED BY THE ENGINEER. PAYMENT FOR THIS WORK SHALL BE CONSIDERED INCLUDED IN THE PRICE BID FOR THE VARIOUS CONTRACT ITEMS.

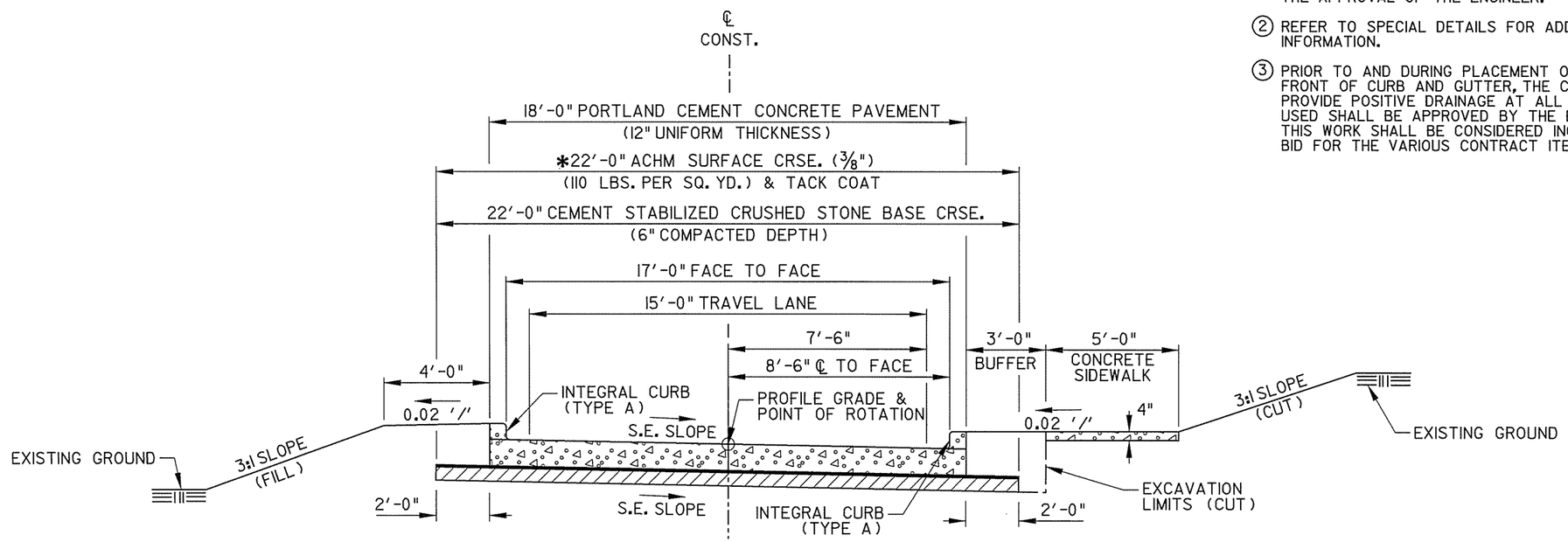

*DENSITY REQUIREMENTS WAIVED

TYPICAL SECTION - SUPERELEVATION SCHOOL DRIVE

STA. 577+64.17 - STA. 579+52.96

STATE OF ARKANSAS
REGISTERED PROFESSIONAL ENGINEER
No. 9808
JAMES L. BARR
8/20/13

DATE REVISED	DATE FILMED	DATE REVISED	DATE FILMED	FED.RD. DIST.NO.	STATE	FED.AID PROJ.NO.	SHEET NO.	TOTAL SHEETS
				6	ARK.			
				JOB NO.		061276	18	438

(2) TYPICAL SECTIONS OF IMPROVEMENT

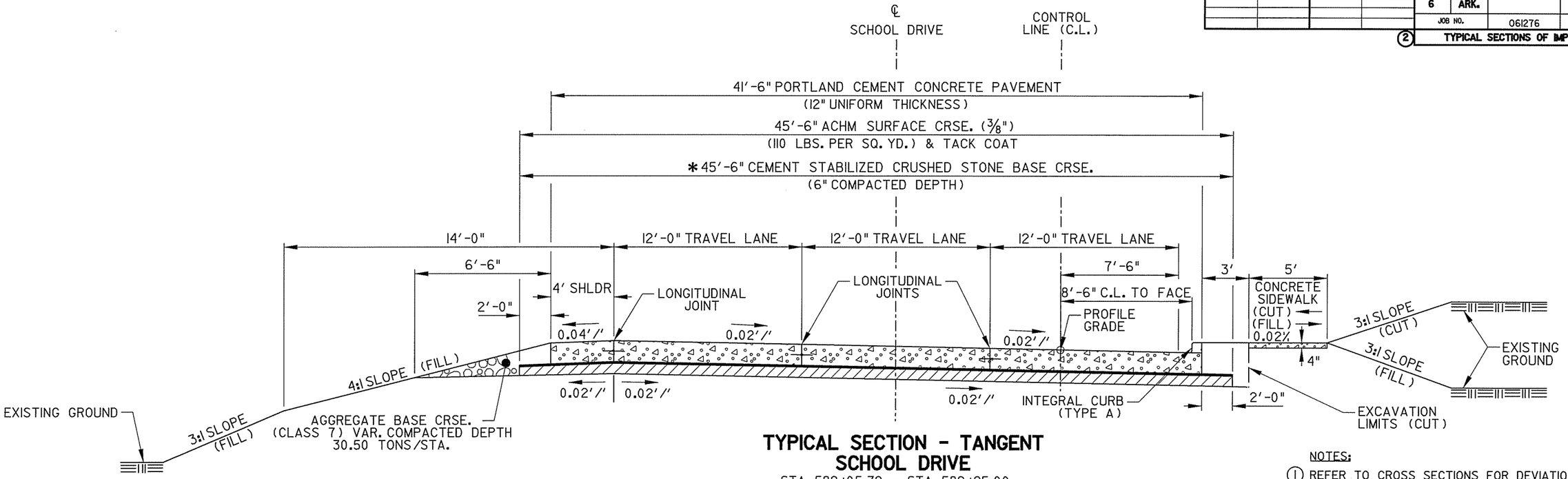

*DENSITY REQUIREMENTS WAIVED

TYPICAL SECTION - TANGENT SCHOOL DRIVE

STA. 589+05.72 - STA. 589+25.00

NOTES:

(1) REFER TO CROSS SECTIONS FOR DEVIATION FROM THE NORMAL SLOPES. NO CHANGES SHALL BE MADE FROM THE PLANNED SLOPES WITHOUT THE APPROVAL OF THE ENGINEER.

(2) ON ALL SUPERELEVATED CURVES AND THROUGH SUPERELEVATED TRANSITIONS (Ls), ALGEBRAIC DIFFERENCE BETWEEN PAVEMENT SLOPE AND SHOULDER SHALL NOT EXCEED 0.08%.

(3) REFER TO SPECIAL DETAILS FOR ADDITIONAL INFORMATION.

(4) PRIOR TO AND DURING PLACEMENT OF PAVEMENT IN FRONT OF CURB AND GUTTER, THE CONTRACTOR SHALL PROVIDE POSITIVE DRAINAGE AT ALL TIMES. THE METHOD(S) USED SHALL BE APPROVED BY THE ENGINEER. PAYMENT FOR THIS WORK SHALL BE CONSIDERED INCLUDED IN THE PRICE BID FOR THE VARIOUS CONTRACT ITEMS.

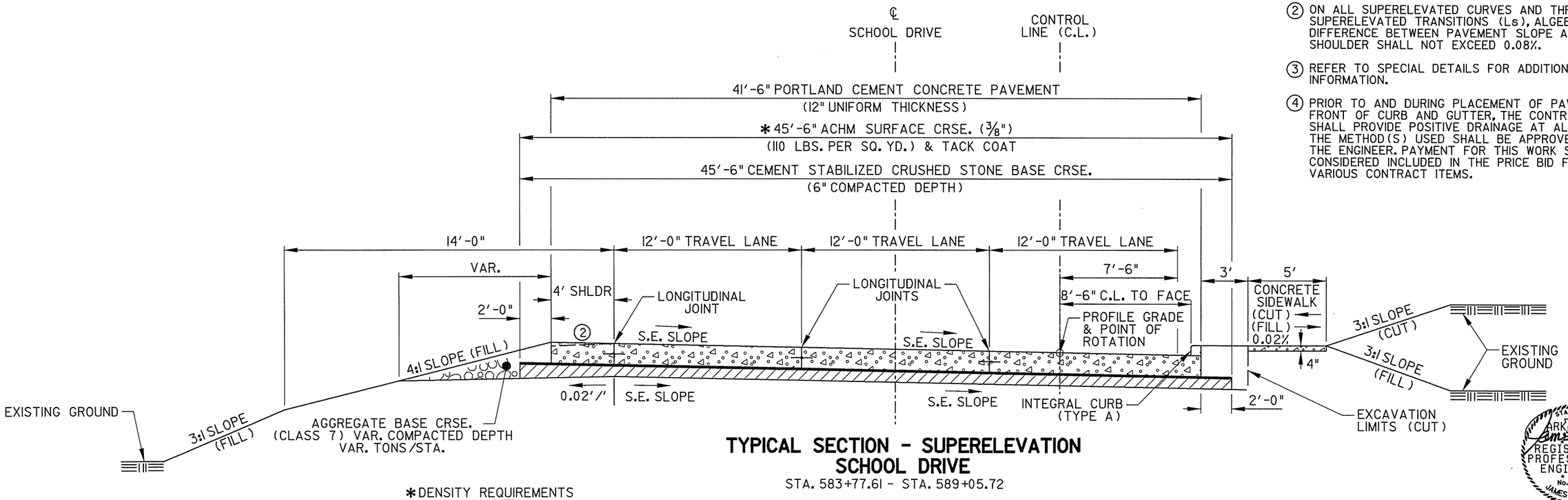

*DENSITY REQUIREMENTS WAIVED

TYPICAL SECTION - SUPERELEVATION SCHOOL DRIVE

STA. 583+77.61 - STA. 589+05.72

STATE OF ARKANSAS
REGISTERED PROFESSIONAL ENGINEER
No. 9808
JAMES L. BARR
4/20/13

DATE REVISED	DATE FILMED	DATE REVISED	DATE FILMED	FED.RD. DIST.NO.	STATE	FED.AID PROJ.NO.	SHEET NO.	TOTAL SHEETS
				6	ARK.			
				JOB NO.		061276	19	438
				(2)	TYPICAL SECTIONS OF IMPROVEMENT			

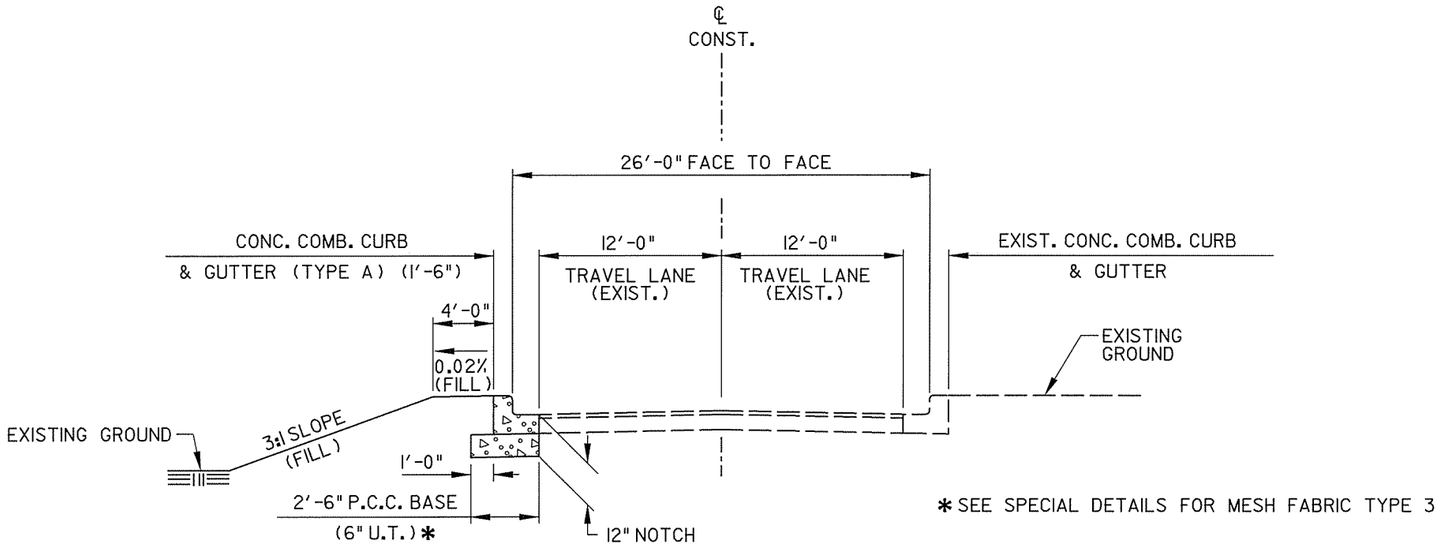

*SEE SPECIAL DETAILS FOR MESH FABRIC TYPE 3

TYPICAL SECTION
T.P. WHITE DRIVE

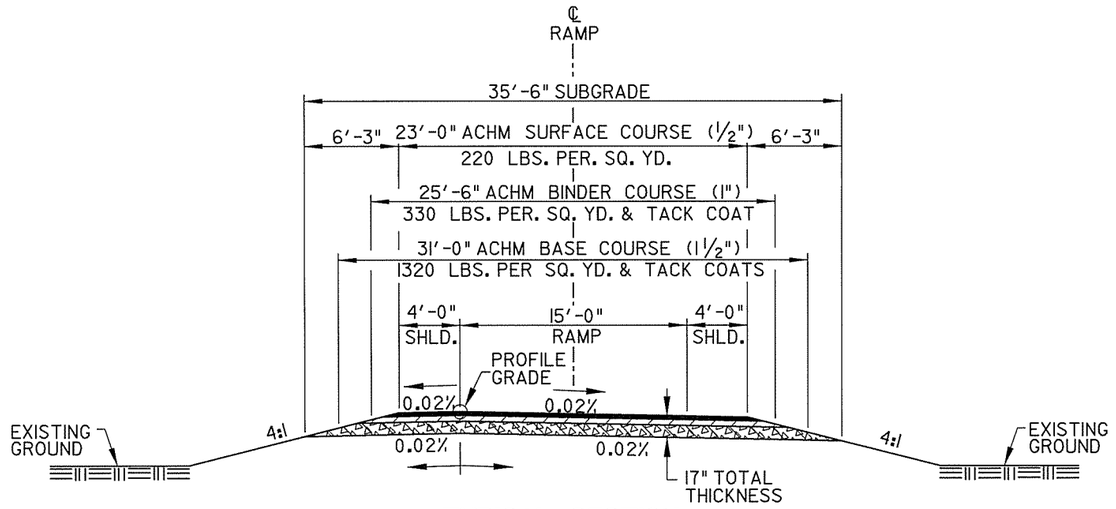

TYPICAL SECTION -
TEMP. INTERCHANGE RAMP
FOR MAINTENANCE OF TRAFFIC

NOTES:

(1) REFER TO CROSS SECTIONS FOR DEVIATION FROM THE NORMAL SLOPES. NO CHANGES SHALL BE MADE FROM THE PLANNED SLOPES WITHOUT THE APPROVAL OF THE ENGINEER.

(2) REFER TO SPECIAL DETAILS FOR ADDITIONAL INFORMATION.

(3) PRIOR TO AND DURING PLACEMENT OF PAVEMENT IN FRONT OF CURB AND GUTTER, THE CONTRACTOR SHALL PROVIDE POSITIVE DRAINAGE AT ALL TIMES. THE METHOD(S) USED SHALL BE APPROVED BY THE ENGINEER. PAYMENT FOR THIS WORK SHALL BE CONSIDERED INCLUDED IN THE PRICE BID FOR THE VARIOUS CONTRACT ITEMS.

STATE OF ARKANSAS
REGISTERED PROFESSIONAL ENGINEER
No. 9808
JAMES L. BARR
8/22/13

DATE REVISED	DATE FILMED	DATE REVISED	DATE FILMED	FED.RD. DIST.NO.	STATE	FED.AID PROJ.NO.	SHEET NO.	TOTAL SHEETS
				6	ARK.			
				JOB NO.		061276	20	438

(2) SPECIAL DETAILS

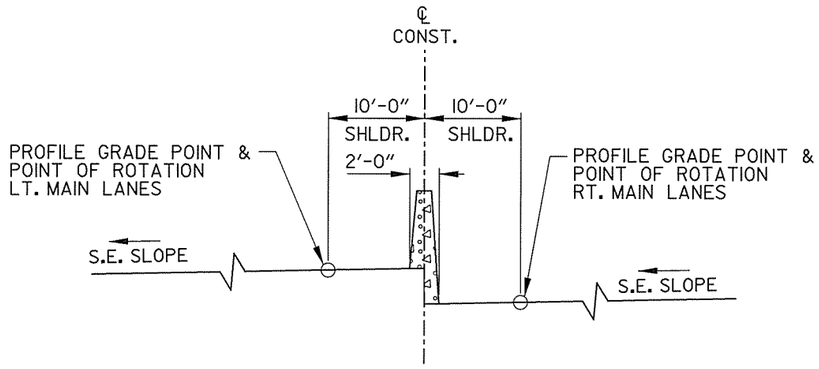

TYPICAL SECTION - SUPERELEVATION DETAIL MAIN LANES

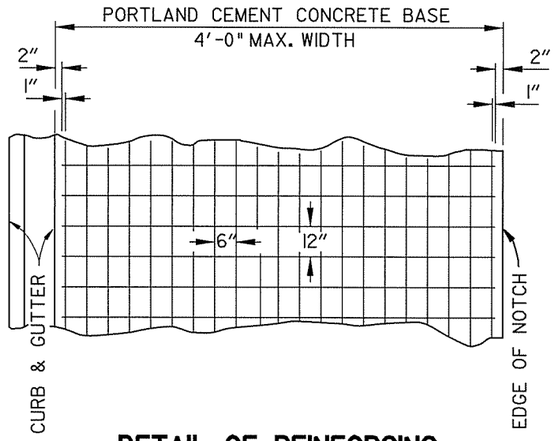

DETAIL OF REINFORCING STEEL FOR PAVEMENT (MESH FABRIC TYPE 3)

6" X 12" MESH FABRIC (TYPE 3) (W5.5 x W2.9) = 4.26 LBS./SQ.YD.

NOTES:

1. LAP MESH FABRIC MIN. 12" LONGITUDINALLY AND MIN. 6" TRANSVERSELY.
2. MESH FABRIC IS NOT REQUIRED WHEN WIDTH OF PORTLAND CEMENT CONCRETE BASE IS LESS THAN 12".
3. MESH FABRIC (TYPE 3) WILL NOT BE PAID FOR DIRECTLY, BUT FULL COMPENSATION, THEREFORE, WILL BE CONSIDERED INCLUDED IN THE CONTRACT PRICE BID PER SQ. YD. FOR PORTLAND CEMENT CONCRETE BASE.

STATE OF ARKANSAS
REGISTERED PROFESSIONAL ENGINEER
No. 9808
JAMES L. BARR
4/26/13

SPECIAL DETAILS

DATE REVISED	DATE FILMED	DATE REVISED	DATE FILMED	FED.RD. DIST.NO.	STATE	FED.AID PROJ.NO.	SHEET NO.	TOTAL SHEETS
				6	ARK.			
				JOB NO.		061276	21	438

(2) SPECIAL DETAILS

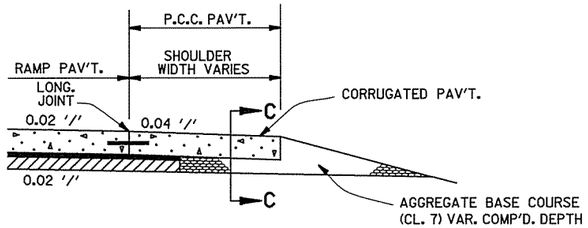

CORRUGATED CONCRETE SHOULDER
AT RAMP INTERSECTION

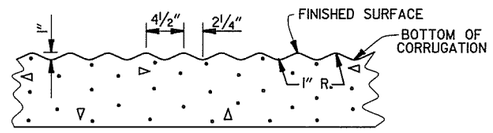

SECTION C–C
CORRUGATED CONCRETE SHOULDERS

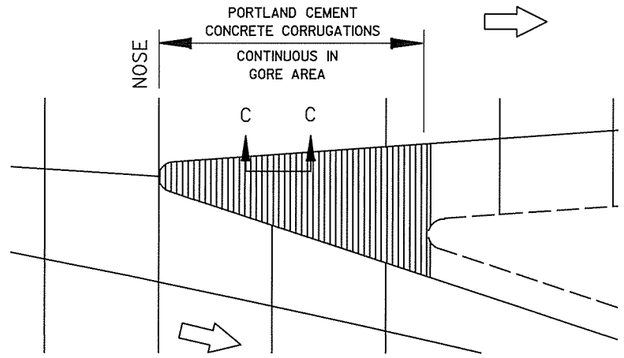

LAYOUT OF SHOULDER CORRUGATIONS
IN EXIT GORE AREAS

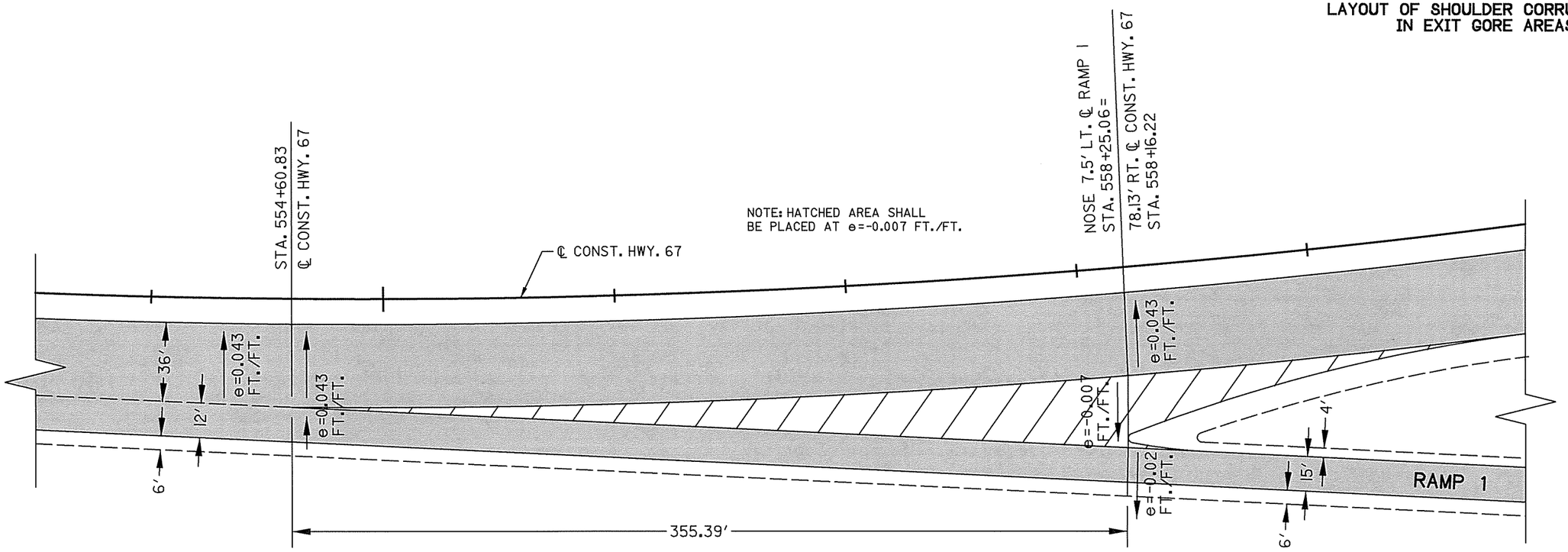

555+00

RAMP 1 REDMOND RD.
NOSE CROSS SLOPE
DETAIL

STATE OF ARKANSAS
REGISTERED PROFESSIONAL ENGINEER
No. 9808
JAMES L. BARR
8/20/13

SPECIAL DETAILS

DATE REVISED	DATE FILMED	DATE REVISED	DATE FILMED	FED.RD. DIST.NO.	STATE	FED.AID PROJ.NO.	SHEET NO.	TOTAL SHEETS
				6	ARK.			
				JOB NO.		061276	22	438

(2) SPECIAL DETAILS

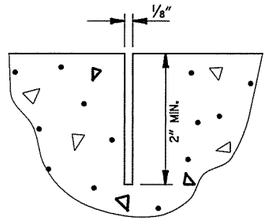

CONTRACTION JOINT DETAIL

NOTES FOR MEDIAN BARRIER:
1. ALL EXPOSED EDGES SHALL HAVE 3/4" CHAMFERS.
2. CONTRACTION JOINTS SHALL BE CONSTRUCTED AT 15'-0" MAXIMUM SPACING IN TOP AND SIDES OF MEDIAN BARRIER AND SHALL BE FORMED IN FRESH CONCRETE.
3. CONTRACTION JOINTS ARE NOT PERMITTED AT THE DOWEL BAR LOCATIONS.
4. ALL REINFORCING BARS SHALL HAVE 2" MINIMUM COVER.
5. DOWEL BARS WILL NOT BE REQUIRED IF BARRIER AND BASE ARE CAST AS A COMPLETE UNIT.
6. BARRIER TRANSITIONS WILL BE MEASURED AND PAID FOR AS "CONCRETE BARRIER WALL (MEDIAN TYPE A)".
7. DRAINAGE OPENINGS TO BE CONSTRUCTED ADJACENT TO TYPE ST DROP INLETS. DOWEL BARS SHALL NOT BE PLACED WITHIN 3" OF DRAINAGE OPENINGS.
8. SPACING BETWEEN EXPANSION JOINTS SHALL NOT EXCEED 400 FT. EXPANSION JOINTS SHALL BE FORMED USING 1" PREFORMED JOINT FILLER. CONTINUOUS REINFORCEMENT SHALL BE CUT 2" CLEAR OF EXPANSION JOINTS.

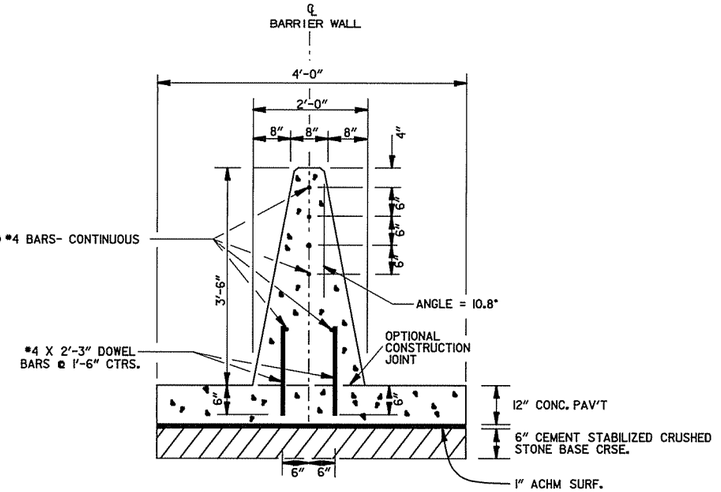

CONCRETE BARRIER WALL
(MEDIAN TYPE A)

STATE OF ARKANSAS
REGISTERED PROFESSIONAL ENGINEER
No. 9808
JAMES L. BARR
8/20/13

SPECIAL DETAILS

r061276.SP1.dgn 8/19/2013 12:02:22 PM

DATE REVISED	DATE FILMED	DATE REVISED	DATE FILMED	FED.RD. DIST.NO.	STATE	FED.AID PROJ.NO.	SHEET NO.	TOTAL SHEETS
5/23/14				6	ARK.			
				JOB NO.		061276	23	438

(2) SPECIAL DETAILS

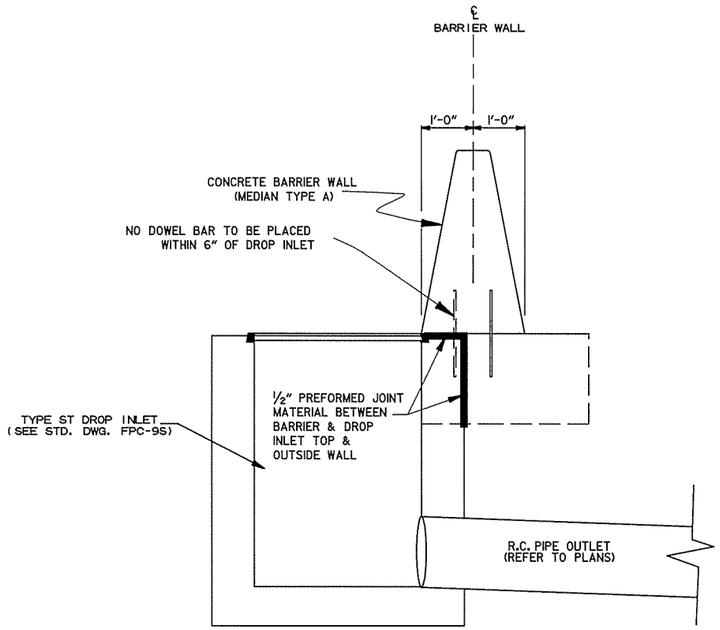

ADJACENT TO CONCRETE BARRIER WALL (MEDIAN TYPE SPECIAL)
TRANSVERSE SECTION OF TYPE ST DROP INLET

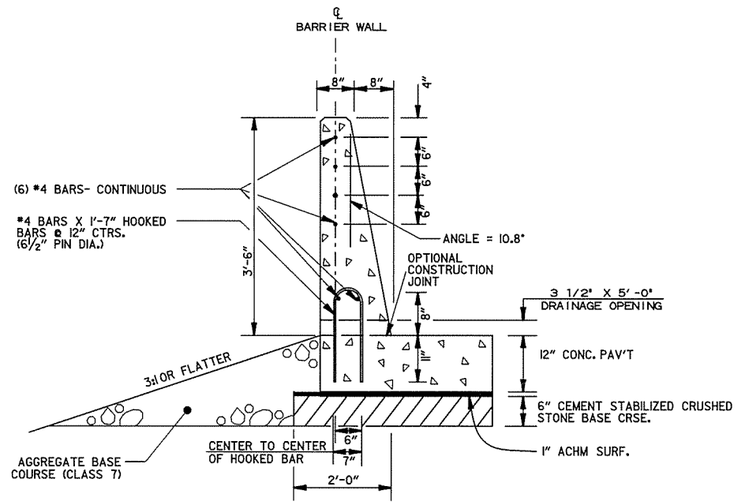

CONCRETE BARRIER WALL
(SIDE TYPE A)

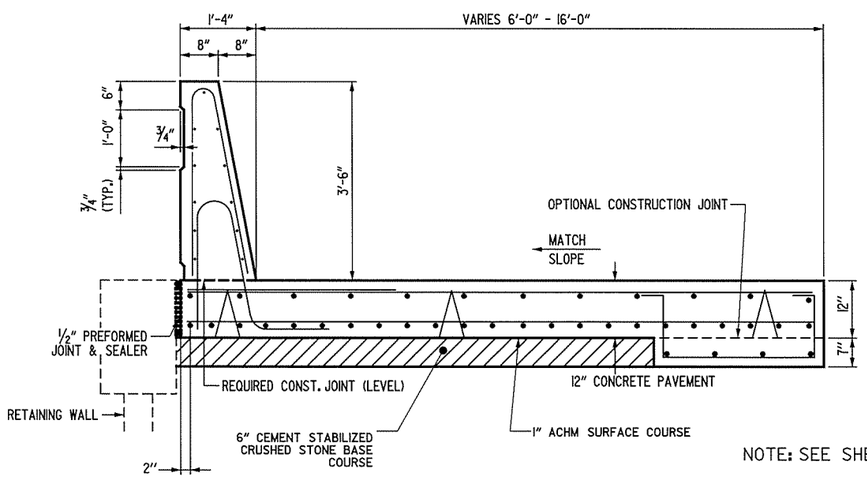

NOTE: SEE SHEET 290 FOR ADDITIONAL INFORMATION.

PARAPET TYPE C DETAIL

STATE OF ARKANSAS
REGISTERED PROFESSIONAL ENGINEER
No. 9808
JAMES L. BARR
5/23/14

SPECIAL DETAILS

r061276.SP4.dgn 5/23/2014 8:41:28 AM

DATE REVISED	DATE FILMED	DATE REVISED	DATE FILMED	FED.RD. DIST.NO.	STATE	FED.AID PROJ.NO.	SHEET NO.	TOTAL SHEETS
				6	ARK.			
				JOB NO.		061276	24	438

(2) SPECIAL DETAILS

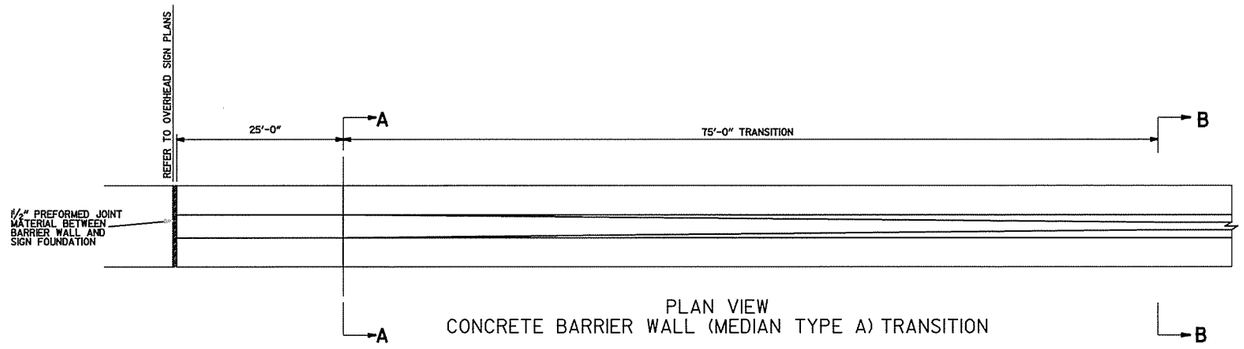

PLAN VIEW
CONCRETE BARRIER WALL (MEDIAN TYPE A) TRANSITION

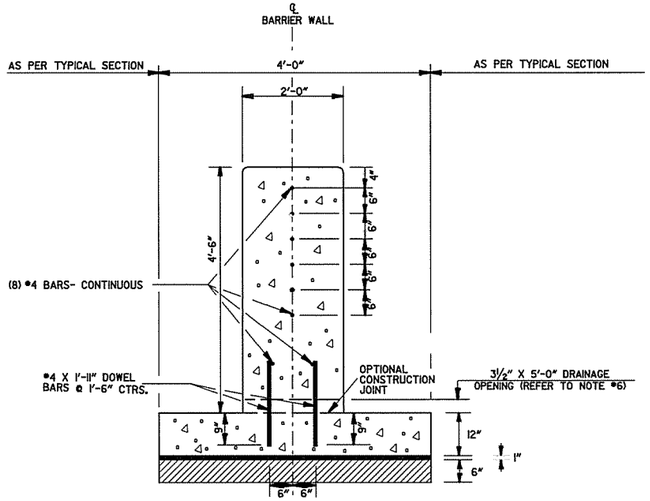

CONCRETE BARRIER WALL (MEDIAN TYPE A)
(SECTION A-A)

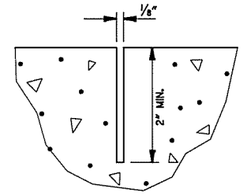

CONTRACTION JOINT DETAIL

NOTES FOR MEDIAN BARRIER:
1. ALL EXPOSED EDGES SHALL HAVE 3/4" CHAMFERS.
2. CONTRACTION JOINTS SHALL BE CONSTRUCTED AT 15'-0" MAXIMUM SPACING IN TOP AND SIDES OF MEDIAN BARRIER AND SHALL BE FORMED IN FRESH CONCRETE.
3. CONTRACTION JOINTS ARE NOT PERMITTED AT THE DOWEL BAR LOCATIONS.
4. ALL REINFORCING BARS SHALL HAVE 2" MINIMUM COVER.
5. DOWEL BARS WILL NOT BE REQUIRED IF BARRIER AND BASE ARE CAST AS A COMPLETE UNIT.
6. DRAINAGE OPENINGS TO BE CONSTRUCTED ADJACENT TO DROP INLETS. DOWEL BARS SHALL NOT BE PLACED WITHIN 3" OF DRAINAGE OPENINGS.

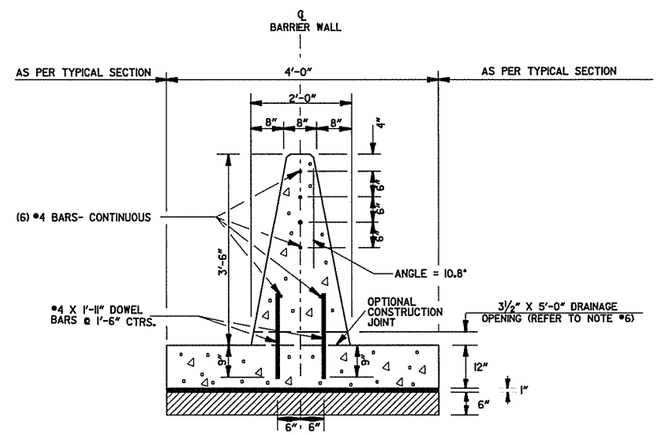

CONCRETE BARRIER WALL (MEDIAN TYPE A)
(SECTION B-B)

CONCRETE BARRIER WALL (MEDIAN TYPE A) TRANSITION
FOR OVERHEAD SIGN STRUCTURE

STATE OF ARKANSAS
REGISTERED PROFESSIONAL ENGINEER
No. 9808
JAMES L. BARR
8/20/13

SPECIAL DETAILS

r061276.SP20.dgn 8/19/2013 12:04:23 PM

DATE REVISED	DATE FILMED	DATE REVISED	DATE FILMED	FED.RD. DIST.NO.	STATE	FED.AID PROJ.NO.	SHEET NO.	TOTAL SHEETS
				6	ARK.			
				JOB NO.		061276	25	438

(2) SPECIAL DETAILS

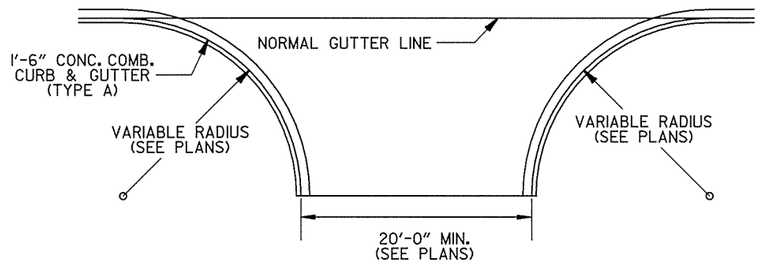

DETAIL OF TURNOUTS FOR CITY STREETS

MUNICIPAL DR.
MARSHALL RD.
SCHOOL DR.
T.P. WHITE DR.

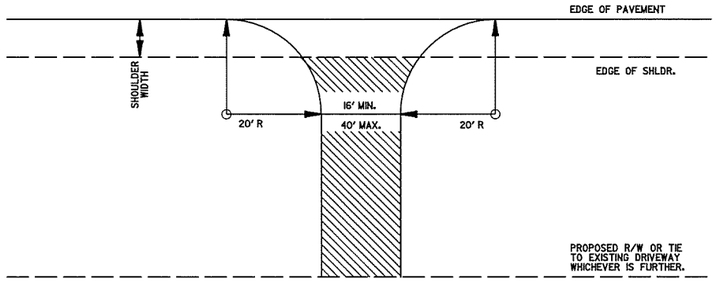

DETAIL FOR DRIVEWAY TURNOUTS
REDMOND ROAD

ASPHALT CONCRETE HOT MIX SURFACE COURSE(1/2") (220 LBS. PER SQ. YD.) AND AGGREGATE BASE COURSE (CLASS 7) 7" COMP. DEPTH IF ASPHALT DRIVE EXISTING; OR 6" CONCRETE IF CONCRETE DRIVE EXISTING.

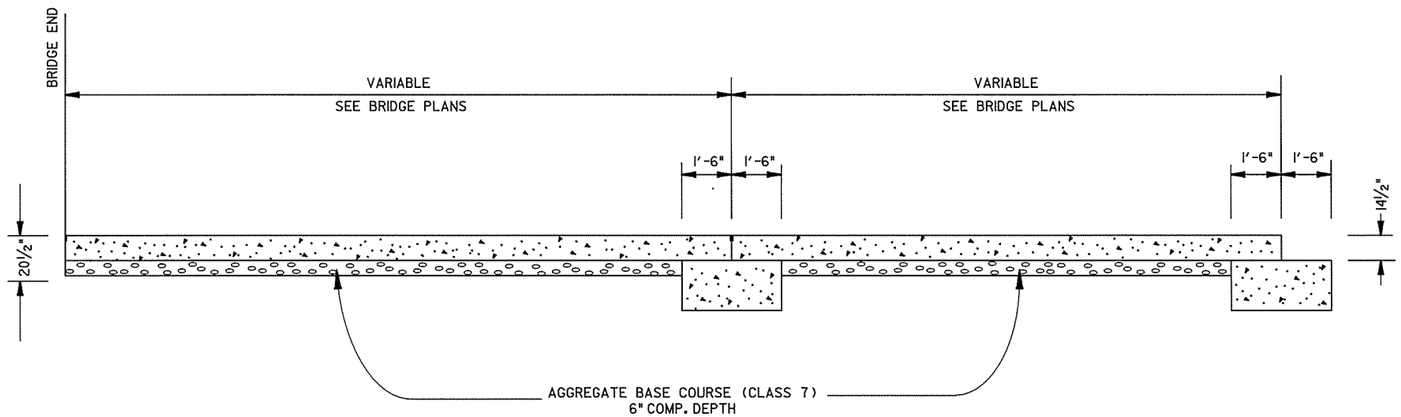

LONGITUDINAL SECTION OF APPROACH SLAB

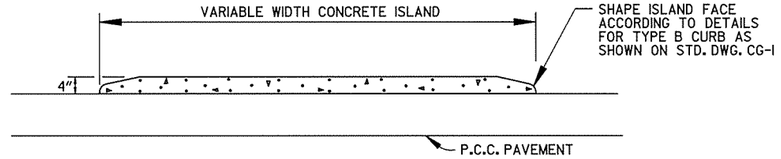

DETAILS OF ISLAND ON P.C.C. PAVEMENT

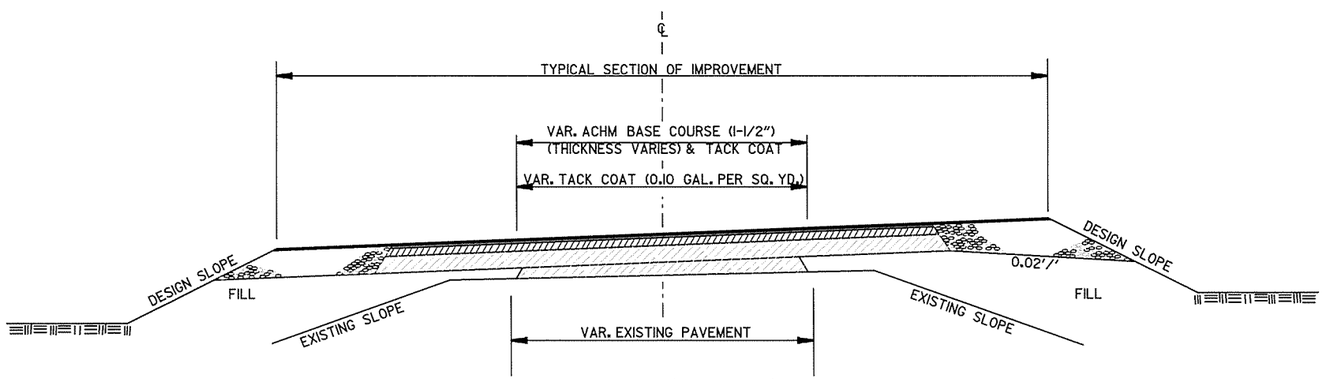

METHOD OF RAISING GRADE
REDMOND ROAD

NOTES:

1. THIS DETAIL TO BE USED ONLY WHERE DIRECTED BY THE ENGINEER.
2. QUANTITIES FOR METHOD OF GRADE RAISE USING ASPHALT WERE CALCULATED ON THIS PROJECT AT LOCATIONS WHERE THE DISTANCE BETWEEN THE EXISTING ASPHALT ROADWAY AND THE PROPOSED SUBGRADE WAS ONE FOOT OR LESS.
3. IN LOCATIONS WHERE THE DISTANCE BETWEEN THE PRORPOSED SUBGRADE AND THE EXISTING ASPHALT ROADWAY IS MORE THAN ONE FOOT, SCARIFICATION OF THE EXISTING ASPHALT ROADWAY WILL BE REQUIRED AS STATED IN SECTION 210, SUBSECTION 210.09, OF THE STANDARD SPECIFICATIONS, EDITION OF 2014.

STATE OF ARKANSAS
REGISTERED PROFESSIONAL ENGINEER
No. 9808
JAMES L. BARR
4/8/14

SPECIAL DETAILS

DATE REVISED	DATE FILMED	DATE REVISED	DATE FILMED	FED.RD. DIST.NO.	STATE	FED.AID PROJ.NO.	SHEET NO.	TOTAL SHEETS
				6	ARK.			
				JOB NO.		061276	26	438

(2) SPECIAL DETAILS

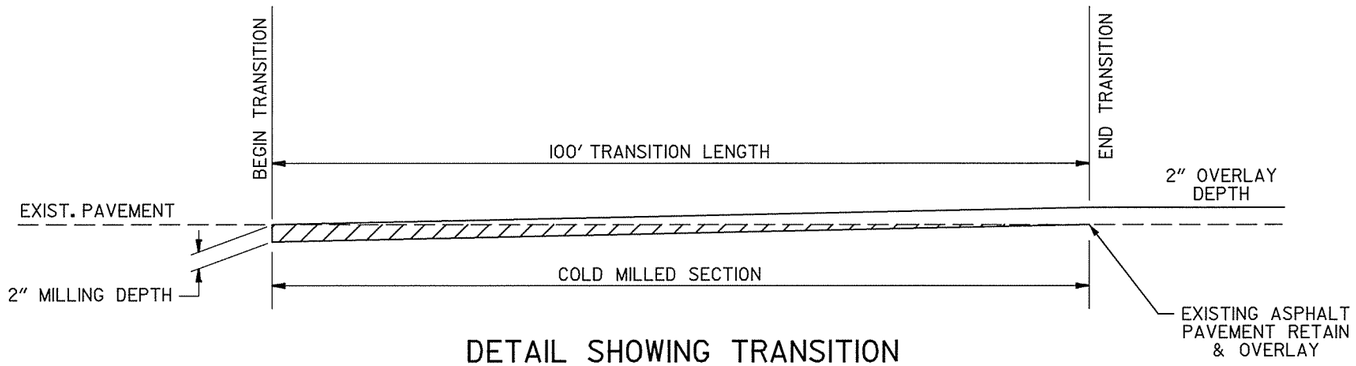

DETAIL SHOWING TRANSITION TO EXISTING PAVEMENT

TO BE USED IF AND WHERE DIRECTED BY THE ENGINEER

STATE OF ARKANSAS
REGISTERED PROFESSIONAL ENGINEER
No. 9808
JAMES L. BARR
8/20/13

SPECIAL DETAILS

r061276.SP19.dgn 8/19/2013 12:04:24 PM

DATE REVISED	DATE FILMED	DATE REVISED	DATE FILMED	FED.RD. DIST.NO.	STATE	FED.AID PROJ.NO.	SHEET NO.	TOTAL SHEETS
				6	ARK.			
				JOB NO.		061276	27	438

(2) SPECIAL DETAILS

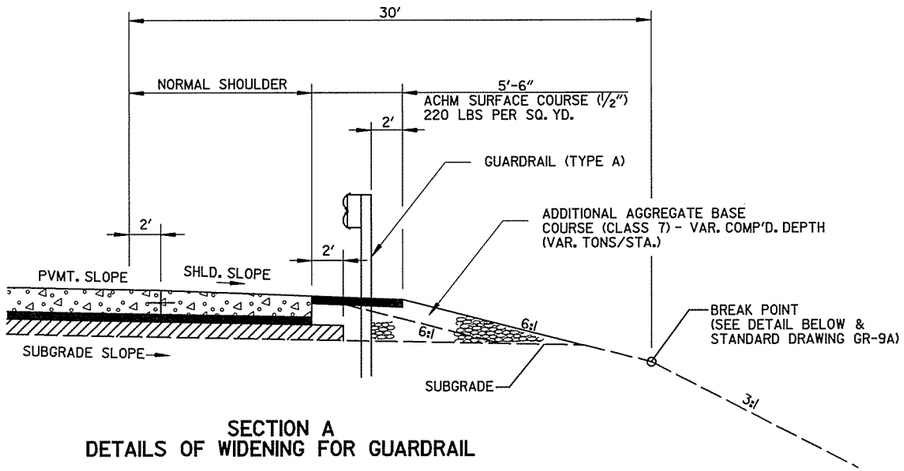

SECTION A
DETAILS OF WIDENING FOR GUARDRAIL

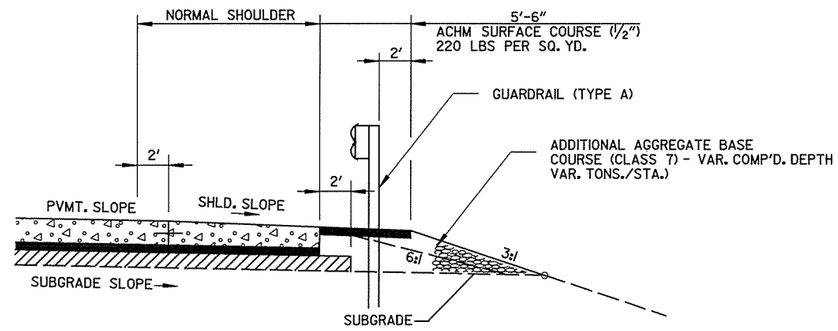

SECTION B
DETAILS OF WIDENING FOR GUARDRAIL

NOTE:

REFER TO STD. DWG. GR-8, GR-8A, GR-9, GR-9A, GR-10, AND GR-10A FOR ADDITIONAL INFORMATION.

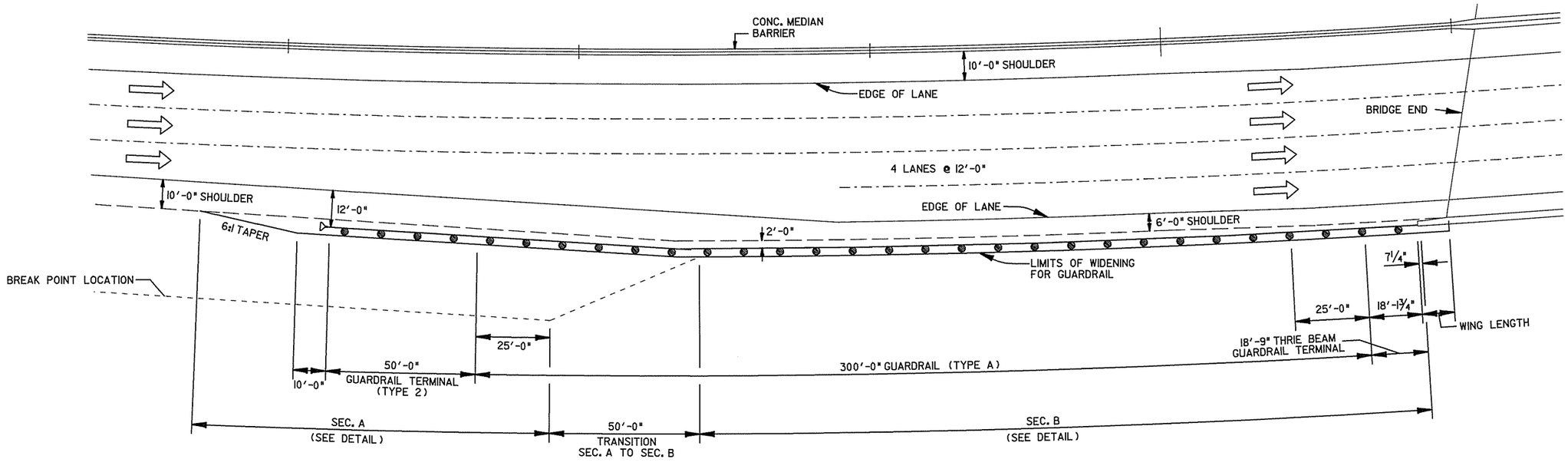

TYPICAL LAYOUT OF GUARDRAIL AT BRIDGE END
(NORTHBOUND AT REDMOND RD.)

STATE OF ARKANSAS
REGISTERED PROFESSIONAL ENGINEER
No. 9808
JAMES L. BARR
8/20/13

SPECIAL DETAILS

DATE REVISED	DATE FILMED	DATE REVISED	DATE FILMED	FED.RD. DIST.NO.	STATE	FED.AID PROJ.NO.	SHEET NO.	TOTAL SHEETS
				6	ARK.			
				JOB NO.		061276	28	438

(2) SPECIAL DETAILS

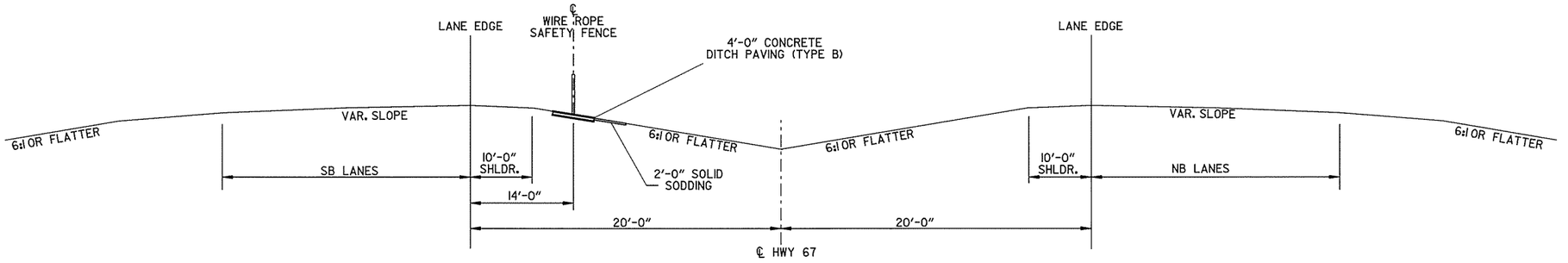

WIRE ROPE SAFETY FENCE ON SOUTHBOUND LANES FORESLOPE

STA. 536+50 - STA. 545+60

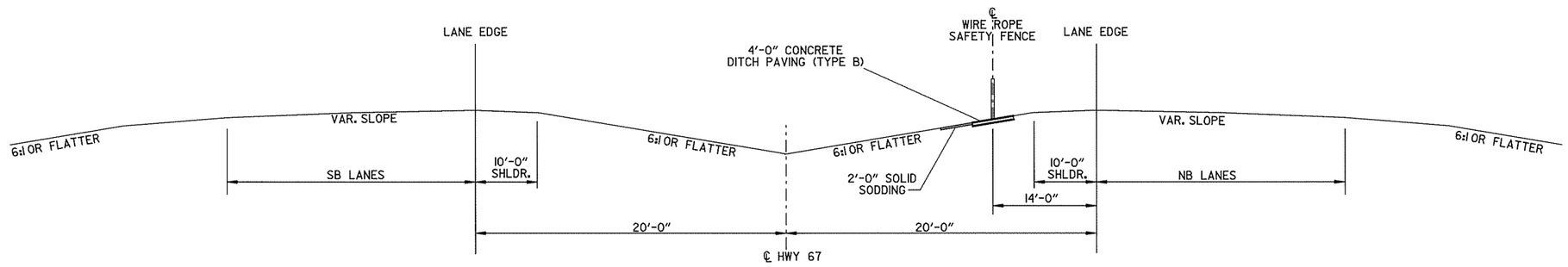

WIRE ROPE SAFETY FENCE ON NORTHBOUND LANES FORESLOPE

STA. 530+50 - STA. 533+50

NOTE: TRANSITION WIRE ROPE SAFETY FENCE
FROM CL HWY. 67 TO LT. OF RT. LANES
FROM STA. 527+50 TO STA. 530+50.

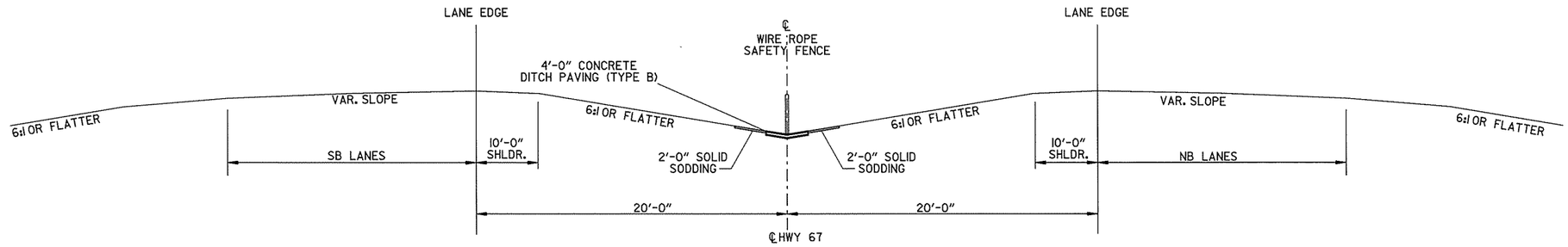

WIRE ROPE SAFETY FENCE ON CENTERLINE OF HIGHWAY 67

STA. 527+50

STATE OF ARKANSAS
REGISTERED PROFESSIONAL ENGINEER
No. 9808
JAMES L. BARR
8/23/13

SPECIAL DETAILS

DATE REVISED	DATE FILMED	DATE REVISED	DATE FILMED	FED.RD. DIST.NO.	STATE	FED.AID PROJ.NO.	SHEET NO.	TOTAL SHEETS
				6	ARK.			
				JOB NO.		061276	29	438

(2) SPECIAL DETAILS

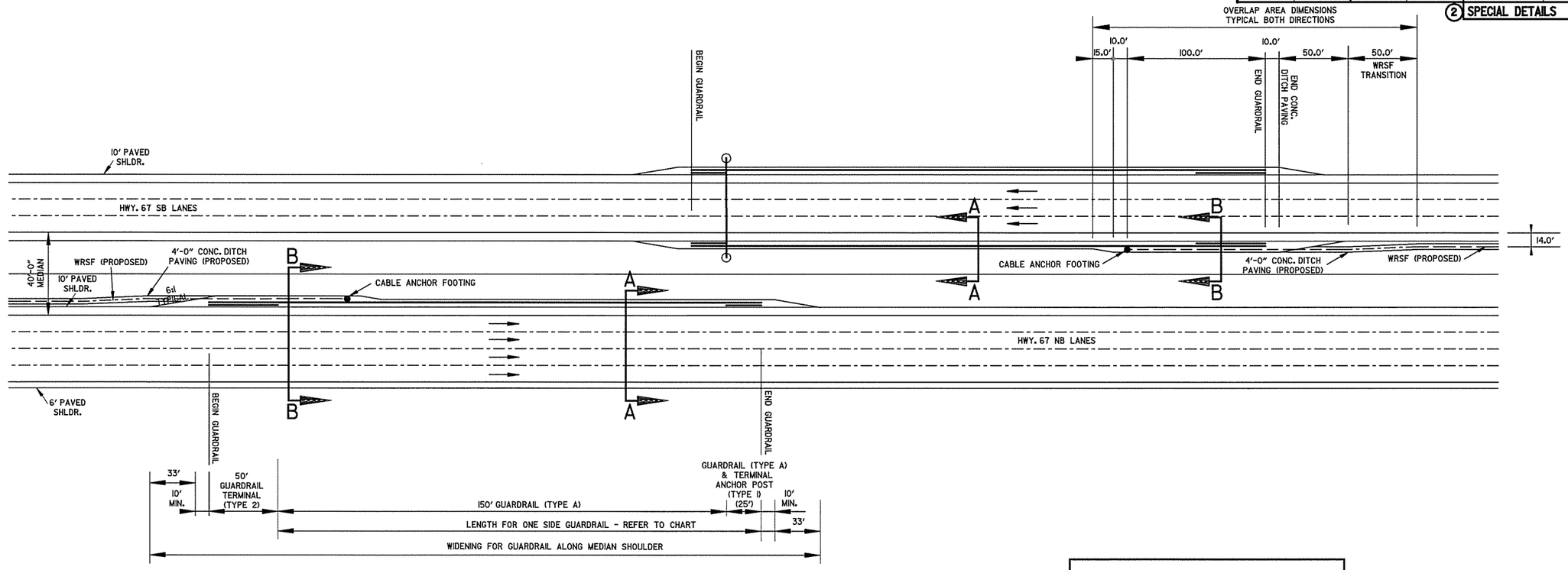

DETAIL AT OVERHEAD SIGN STRUCTURE

SEE GUARDRAIL WIDENING DETAILS.

NOTE: REFER TO PLAN SHEETS FOR PLACEMENT OF WIRE ROPE SAFETY FENCE ON NORTHBOUND OR SOUTHBOUND FORESLOPES.

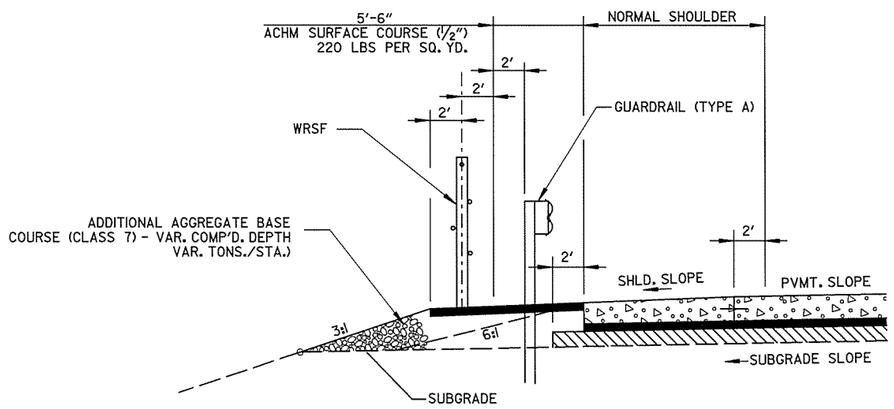

SECTION B-B

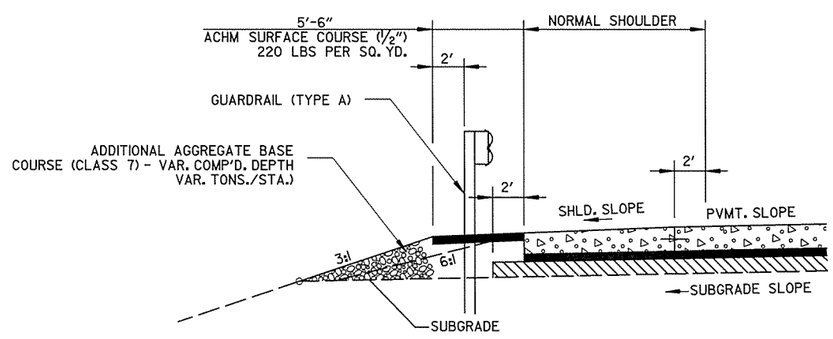

SECTION A-A

STATE OF ARKANSAS
REGISTERED PROFESSIONAL ENGINEER
No. 9808
JAMES L. BARR
8/30/13

SPECIAL DETAILS

DATE REVISED	DATE FILMED	DATE REVISED	DATE FILMED	FED.RD. DIST.NO.	STATE	FED.AID PROJ.NO.	SHEET NO.	TOTAL SHEETS
				6	ARK.			
				JOB NO.		061276	30	438

(2) SPECIAL DETAILS

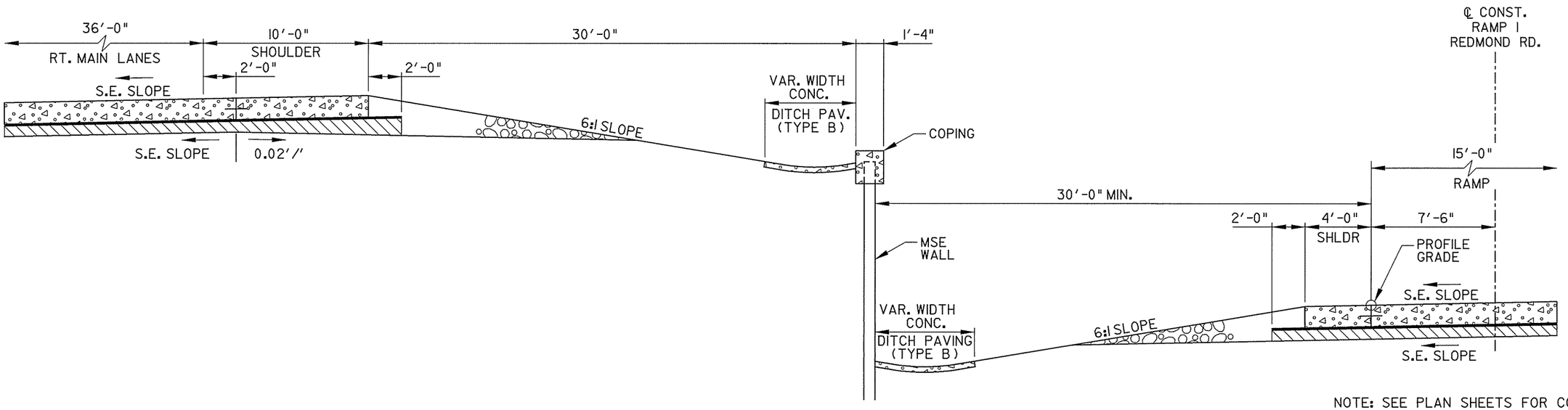

SPECIAL DETAIL
RT. MAIN LANES
SOUTH OF REDMOND ROAD

STA. 560+20.00 TO STA. 560+89.62

NOTE: SEE PLAN SHEETS FOR CONCRETE DITCH PAVING WIDTHS. WIDTHS ARE SPECIFIED IN THE CONCRETE DITCH PAVING CONSTRUCTION NOTES.

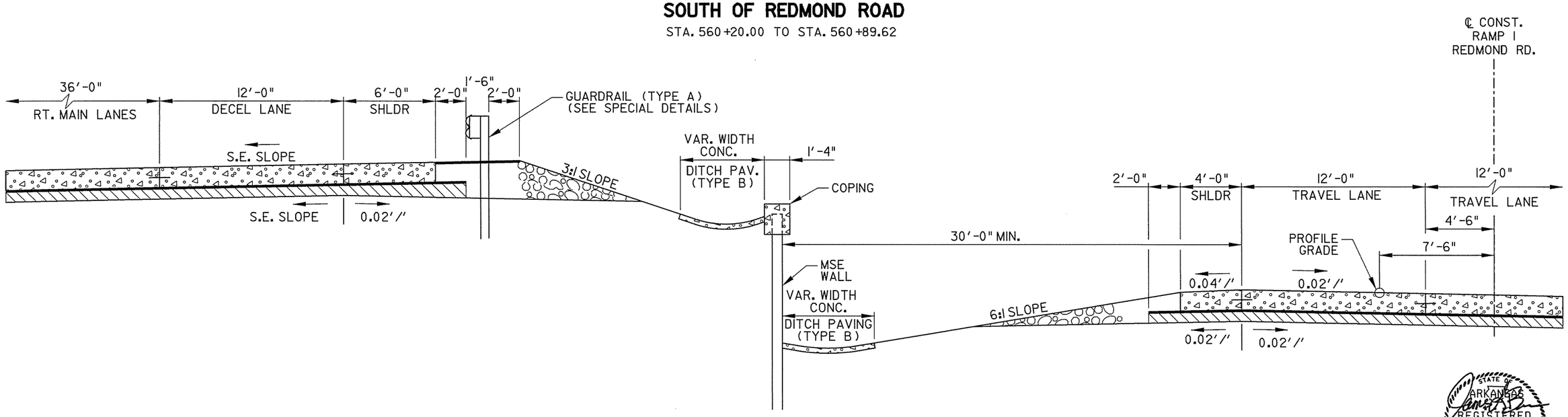

SPECIAL DETAIL
RT. MAIN LANES
SOUTH OF REDMOND ROAD

STA. 563+89.62 TO STA. 565+83.82

STATE OF ARKANSAS
REGISTERED PROFESSIONAL ENGINEER
No. 9808
JAMES L. BARR
8/20/13

SPECIAL DETAILS

r061276.SP10.dgn 8/19/2013 12:04:25 PM

DATE REVISED	DATE FILMED	DATE REVISED	DATE FILMED	FED.RD. DIST.NO.	STATE	FED.AID PROJ.NO.	SHEET NO.	TOTAL SHEETS
				6	ARK.			
				JOB NO.		061276	31	438

(2) SPECIAL DETAILS

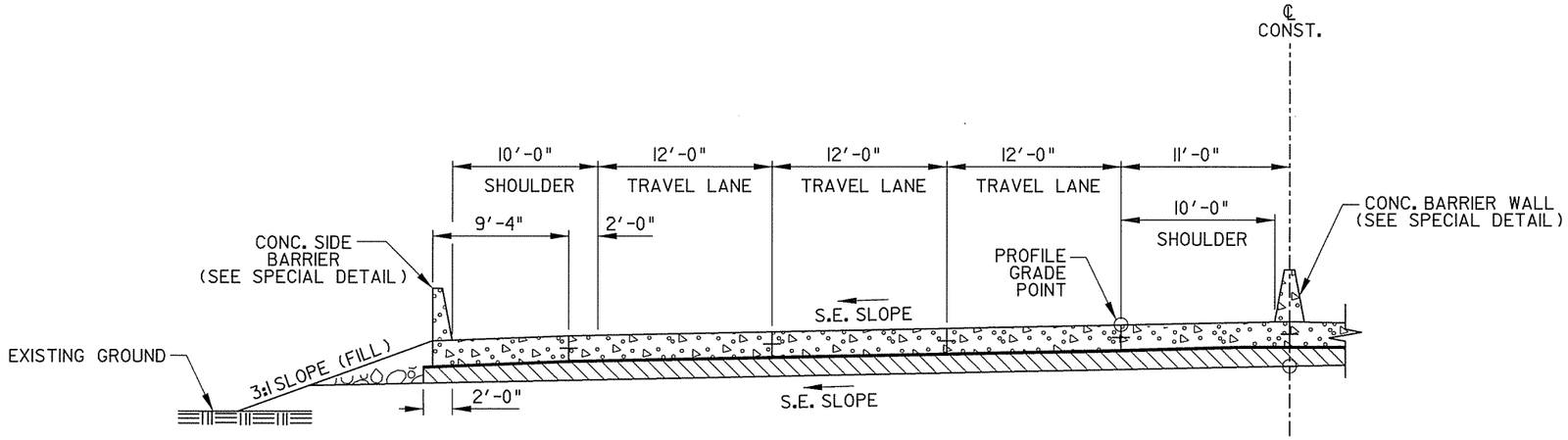

SPECIAL DETAIL
LT. MAIN LANES
NORTH OF REDMOND ROAD

STA. 569+17.82 TO STA. 572+50.00

NOTE: SEE PLAN SHEETS FOR CONCRETE DITCH PAVING WIDTHS. WIDTHS ARE SPECIFIED IN THE CONCRETE DITCH PAVING CONSTRUCTION NOTES.

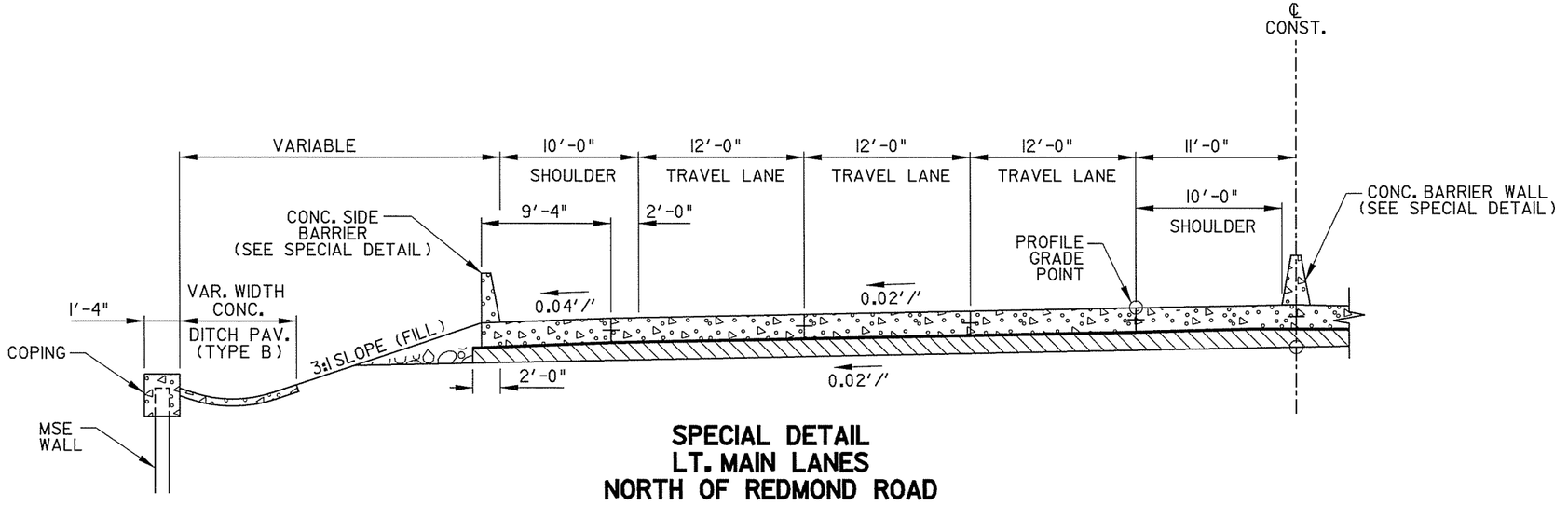

SPECIAL DETAIL
LT. MAIN LANES
NORTH OF REDMOND ROAD

STA. 572+50.00 TO STA. 573+22.04

STATE OF ARKANSAS
REGISTERED PROFESSIONAL ENGINEER
No. 9808
JAMES L. BARR
8/22/13

SPECIAL DETAILS

r061276.SP11.dgn 8/19/2013 12:04:25 PM

DATE REVISED	DATE FILMED	DATE REVISED	DATE FILMED	FED.RD. DIST.NO.	STATE	FED.AID PROJ.NO.	SHEET NO.	TOTAL SHEETS
				6	ARK.			
				JOB NO.		061276	32	438

(2) SPECIAL DETAILS

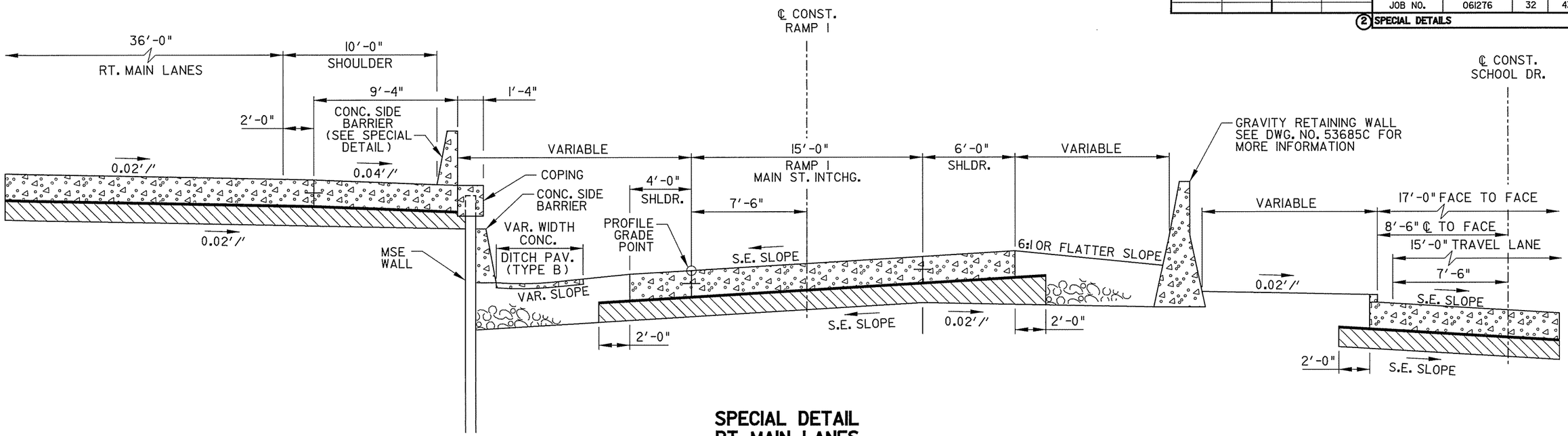

SPECIAL DETAIL
RT. MAIN LANES
SOUTH OF MAIN ST.

STA. 576+50.00 TO STA. 579+51.02

NOTE: SEE PLAN SHEETS FOR CONCRETE DITCH PAVING WIDTHS. WIDTHS ARE SPECIFIED IN THE CONCRETE DITCH PAVING CONSTRUCTION NOTES.

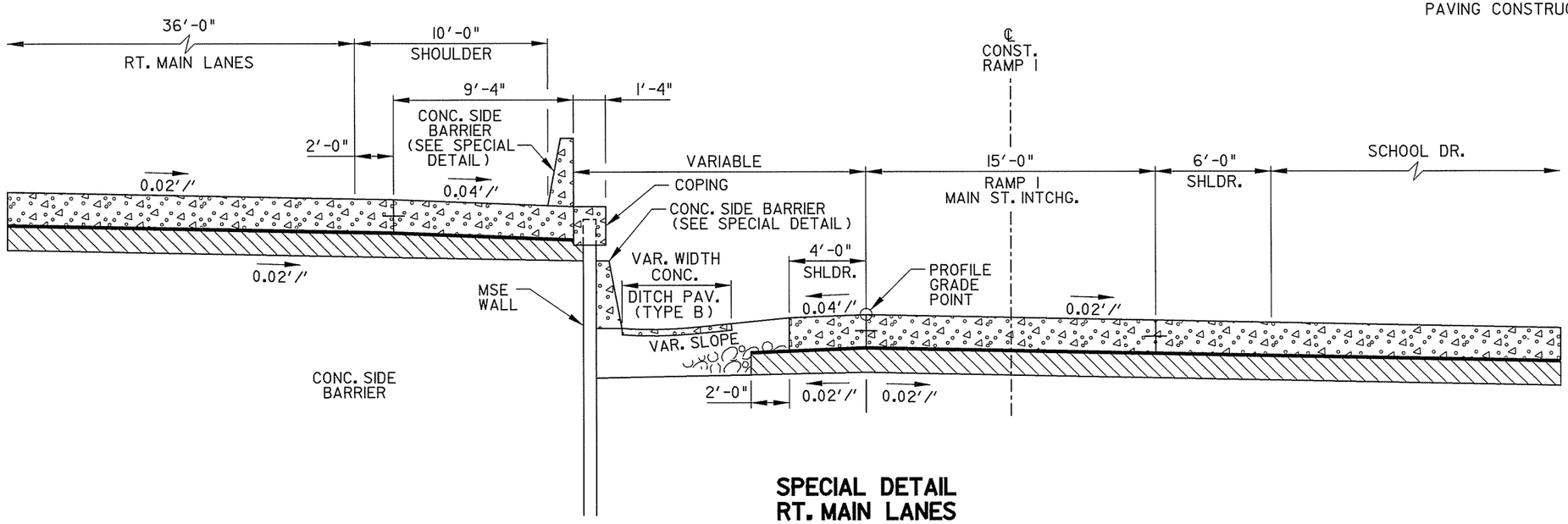

SPECIAL DETAIL
RT. MAIN LANES
SOUTH OF MAIN ST.

STA. 579+51.02 TO STA. 582+96.01

STATE OF ARKANSAS
REGISTERED PROFESSIONAL ENGINEER
No. 9808
JAMES L. BARR
8/20/13

SPECIAL DETAILS

DATE REVISED	DATE FILMED	DATE REVISED	DATE FILMED	FED.RD. DIST.NO.	STATE	FED.AID PROJ.NO.	SHEET NO.	TOTAL SHEETS
				6	ARK.			
				JOB NO.		061276	33	438

(2) SPECIAL DETAILS

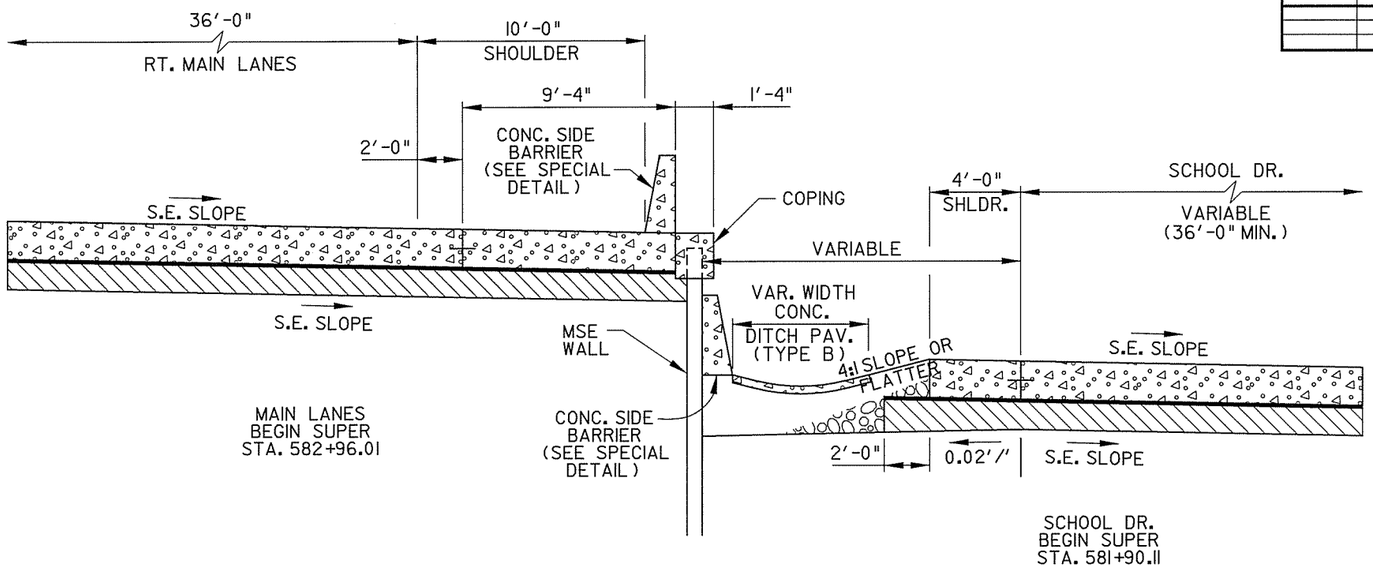

SPECIAL DETAIL
RT. MAIN LANES
SOUTH OF MAIN ST.

STA. 582+96.01 TO STA. 585+00.00

NOTE: SEE PLAN SHEETS FOR CONCRETE DITCH PAVING WIDTHS. WIDTHS ARE SPECIFIED IN THE CONCRETE DITCH PAVING CONSTRUCTION NOTES.

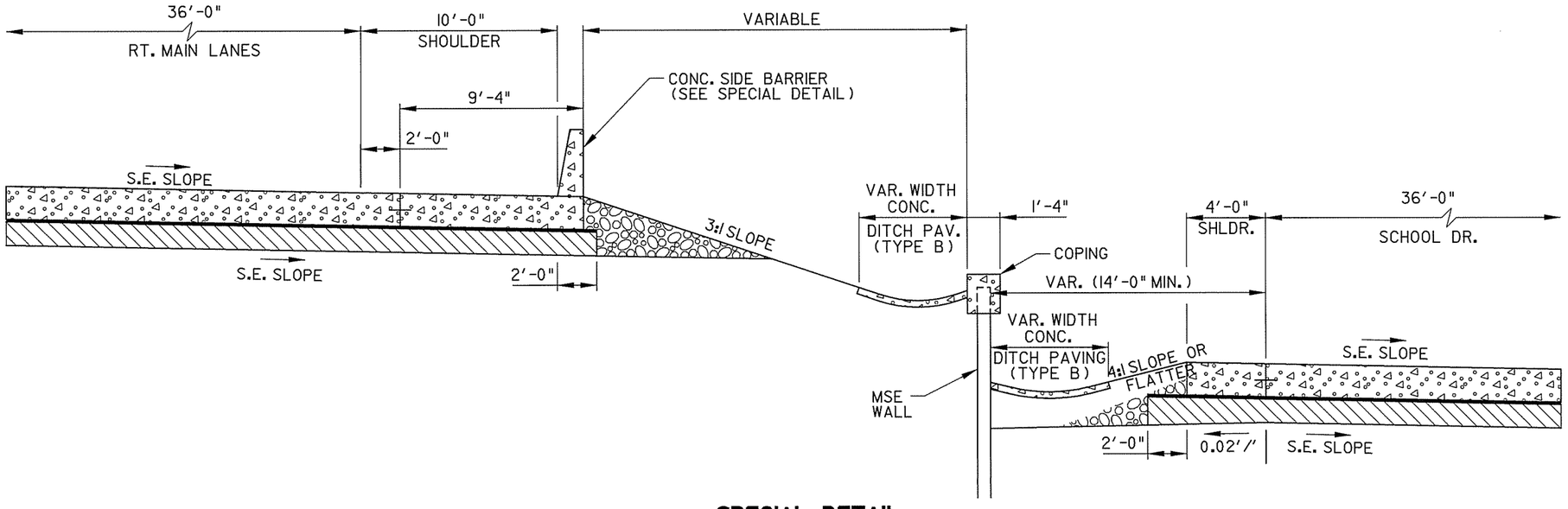

SPECIAL DETAIL
RT. MAIN LANES
SOUTH OF MAIN ST.

STA. 585+00.00 TO STA. 588+79.24

STATE OF ARKANSAS
REGISTERED PROFESSIONAL ENGINEER
No. 9808
JAMES L. BARR
8/20/13

SPECIAL DETAILS

r061276.SP16.dgn 8/19/2013 12:04:25 PM

DATE REVISED	DATE FILMED	DATE REVISED	DATE FILMED	FED.RD. DIST.NO.	STATE	FED.AID PROJ.NO.	SHEET NO.	TOTAL SHEETS
				6	ARK.			
				JOB NO.		061276	34	438

(2) SPECIAL DETAILS

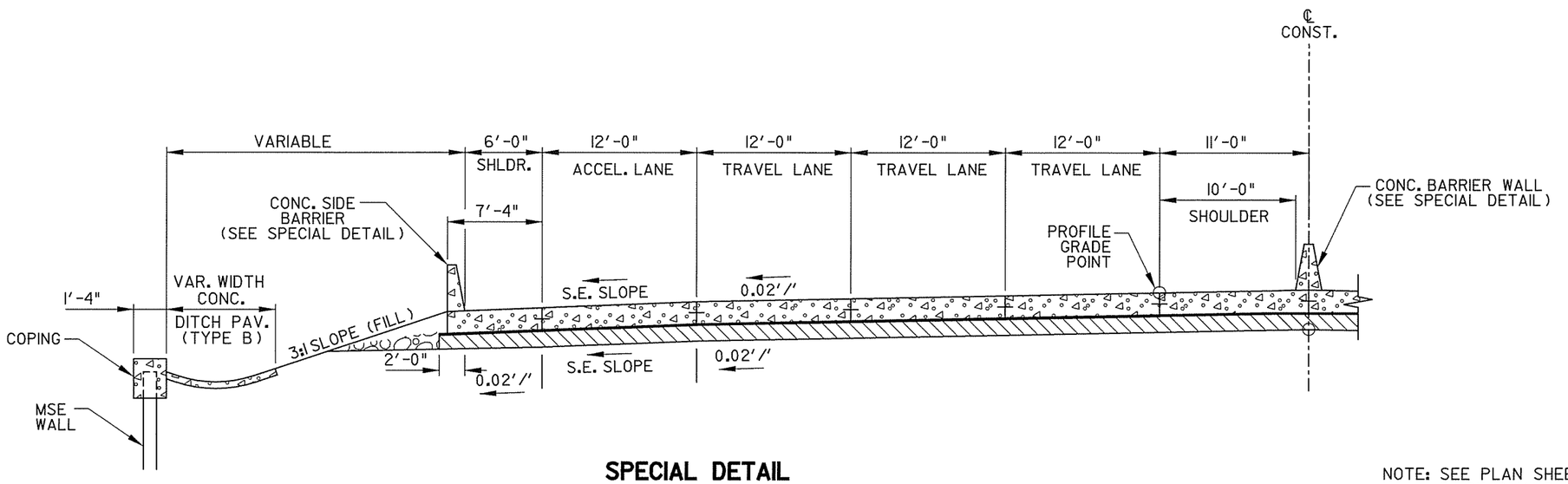

SPECIAL DETAIL
LT. MAIN LANES
SOUTH OF MAIN ST.

STA. 576+22.04 TO STA. 580+00.00

NOTE: SEE PLAN SHEETS FOR CONCRETE DITCH PAVING WIDTHS. WIDTHS ARE SPECIFIED IN THE CONCRETE DITCH PAVING CONSTRUCTION NOTES.

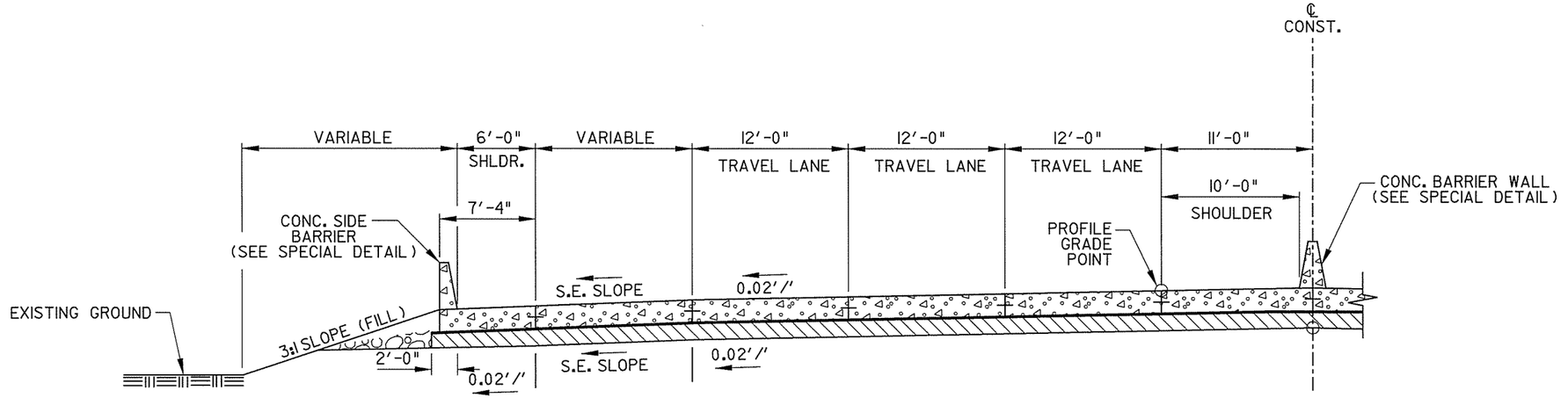

SPECIAL DETAIL
LT. MAIN LANES
SOUTH OF MAIN ST.

STA. 580+00.00 TO STA. 581+95.00

STATE OF ARKANSAS
REGISTERED PROFESSIONAL ENGINEER
No. 9808
JAMES L. BARR
8/24/13

SPECIAL DETAILS

r061276.SP12.dgn 8/19/2013 12:04:26 PM

DATE REVISED	DATE FILMED	DATE REVISED	DATE FILMED	FED.RD. DIST.NO.	STATE	FED.AID PROJ.NO.	SHEET NO.	TOTAL SHEETS
				6	ARK.			
				JOB NO.		061276	35	438

(2) SPECIAL DETAILS

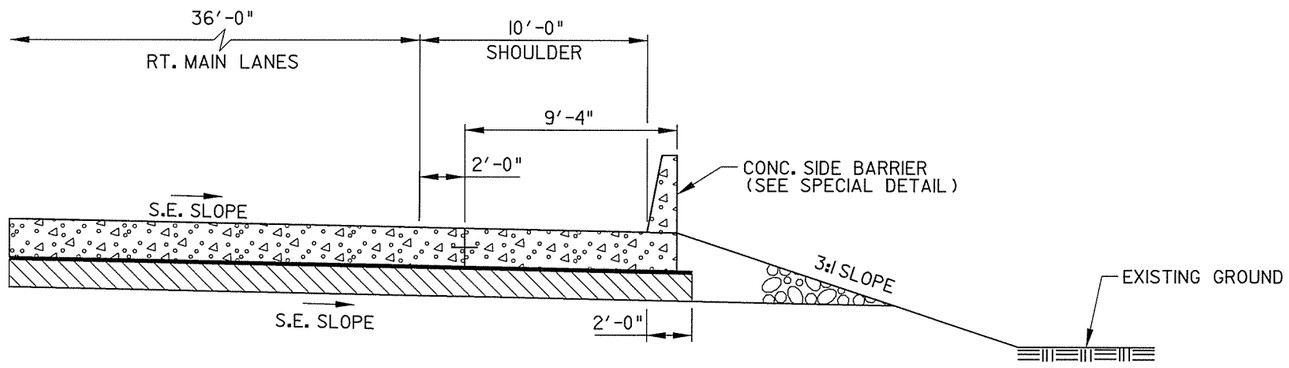

SPECIAL DETAIL
RT. MAIN LANES
NORTH OF MAIN ST.

STA. 591+48.82 TO 593+00.00
STA. 595+00.00 TO 596+50.00

NOTE: SEE PLAN SHEETS FOR CONCRETE DITCH PAVING WIDTHS. WIDTHS ARE SPECIFIED IN THE CONCRETE DITCH PAVING CONSTRUCTION NOTES.

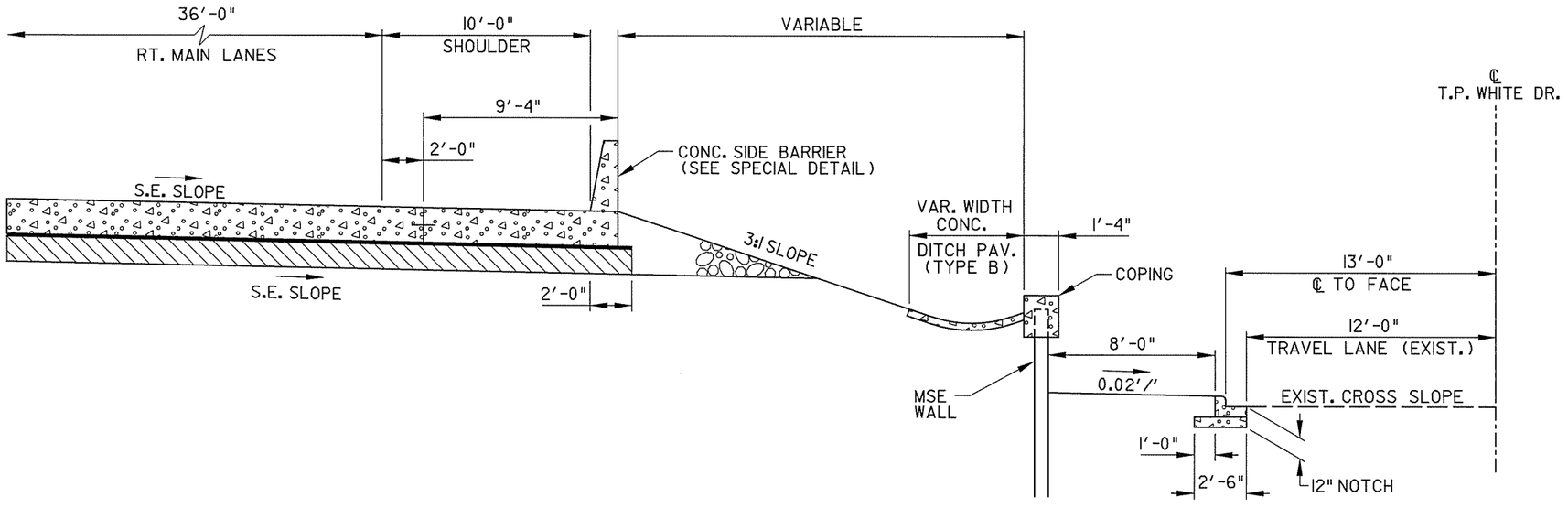

SPECIAL DETAIL
RT. MAIN LANES
NORTH OF MAIN ST.

STA. 593+00.00 TO STA. 595+00.00

STATE OF ARKANSAS
REGISTERED PROFESSIONAL ENGINEER
No. 9808
JAMES L. BARR
8/20/13

SPECIAL DETAILS

DATE REVISED	DATE FILMED	DATE REVISED	DATE FILMED	FED.RD. DIST.NO.	STATE	FED.AID PROJ.NO.	SHEET NO.	TOTAL SHEETS
				6	ARK.			
				JOB NO.		061276	36	438

(2) SPECIAL DETAILS

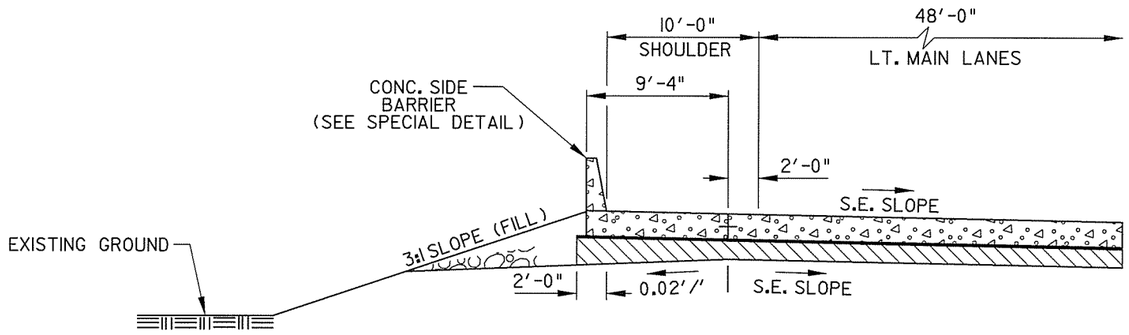

SPECIAL DETAIL
LT. MAIN LANES
NORTH OF MAIN ST.

STA. 590+85.82 TO STA. 594+00.00

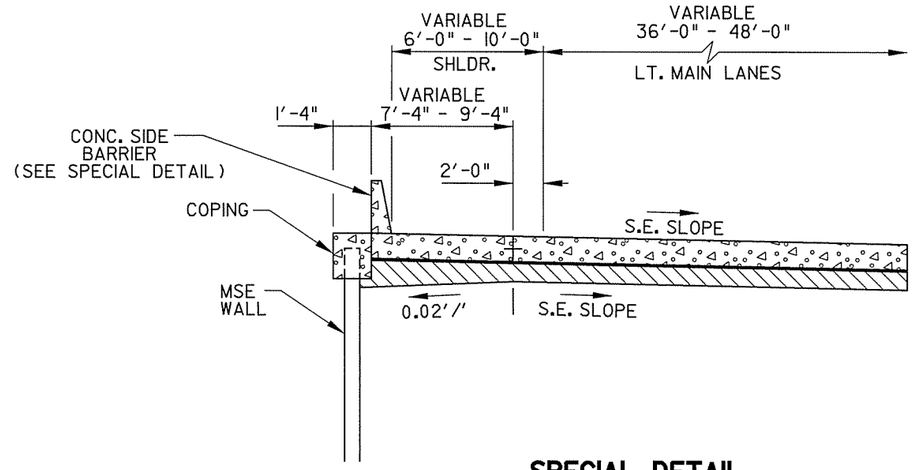

SPECIAL DETAIL
LT. MAIN LANES
NORTH OF MAIN ST.

STA. 594+00.00 TO STA. 599+25.00

STATE OF ARKANSAS
REGISTERED PROFESSIONAL ENGINEER
No. 9808
JAMES L. BARR
8/20/13

SPECIAL DETAILS

r061276.SP14.dgn 8/19/2013 12:04:26 PM

DATE REVISED	DATE FILMED	DATE REVISED	DATE FILMED	FED.RD. DIST.NO.	STATE	FED.AID PROJ.NO.	SHEET NO.	TOTAL SHEETS
				6	ARK.			
				JOB NO.		061276	37	438

(2) SPECIAL DETAILS

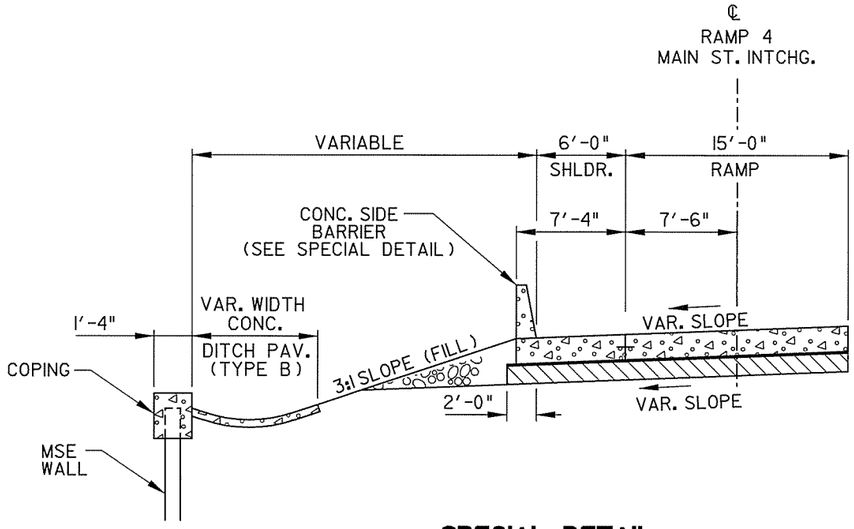

SPECIAL DETAIL
RAMP 4 - MAIN ST. INTERCHANGE

STA. 581+95.00 TO STA. 584+98.73

NOTE: SEE PLAN SHEETS FOR CONCRETE DITCH PAVING WIDTHS. WIDTHS ARE SPECIFIED IN THE CONCRETE DITCH PAVING CONSTRUCTION NOTES.

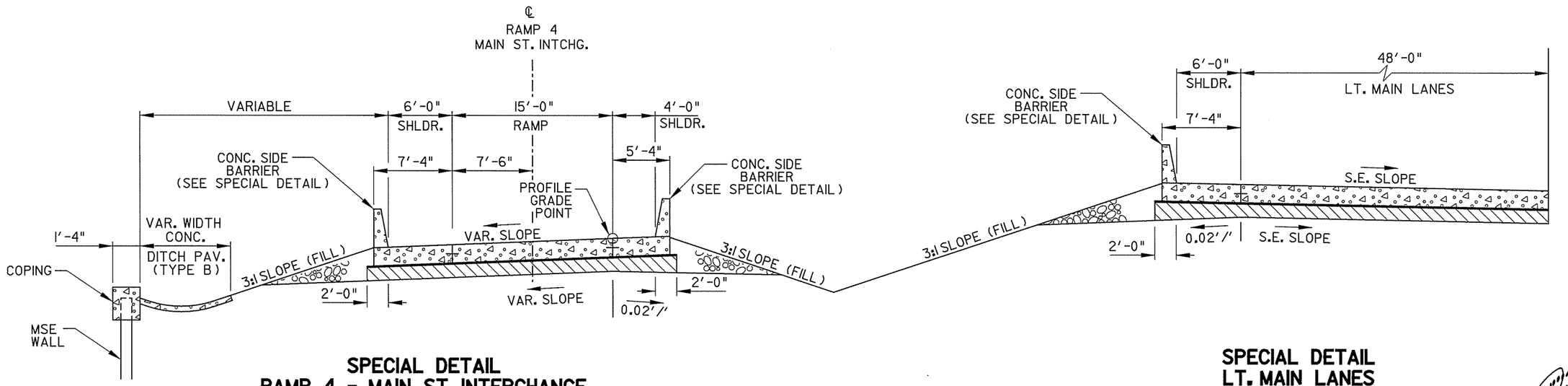

SPECIAL DETAIL
RAMP 4 - MAIN ST. INTERCHANGE

STA. 584+98.73 TO STA. 587+81.46

SPECIAL DETAIL
LT. MAIN LANES
SOUTH OF MAIN ST.

STA. 585+04.25 TO STA. 588+32.49

STATE OF ARKANSAS
REGISTERED PROFESSIONAL ENGINEER
No. 9808
JAMES L. BARR
8/22/13

SPECIAL DETAILS

r061276.SP13.dgn 8/19/2013 12:04:26 PM

DATE REVISED	DATE FILMED	DATE REVISED	DATE FILMED	FED.RD. DIST.NO.	STATE	FED.AID PROJ.NO.	SHEET NO.	TOTAL SHEETS
				6	ARK.			
				JOB NO.		061276	38	438

(2) SPECIAL DETAILS

Ⓐ STA. 566+96.78 ℄ RAMP 1=
STA. 41+76.54 ℄ CONST. REDMOND RD.
◁ 82°40'53"

Ⓑ STA. 567+90.48 ℄ RAMP 4=
STA. 35+70.22 ℄ CONST. REDMOND RD.
◁ 90°00'00"

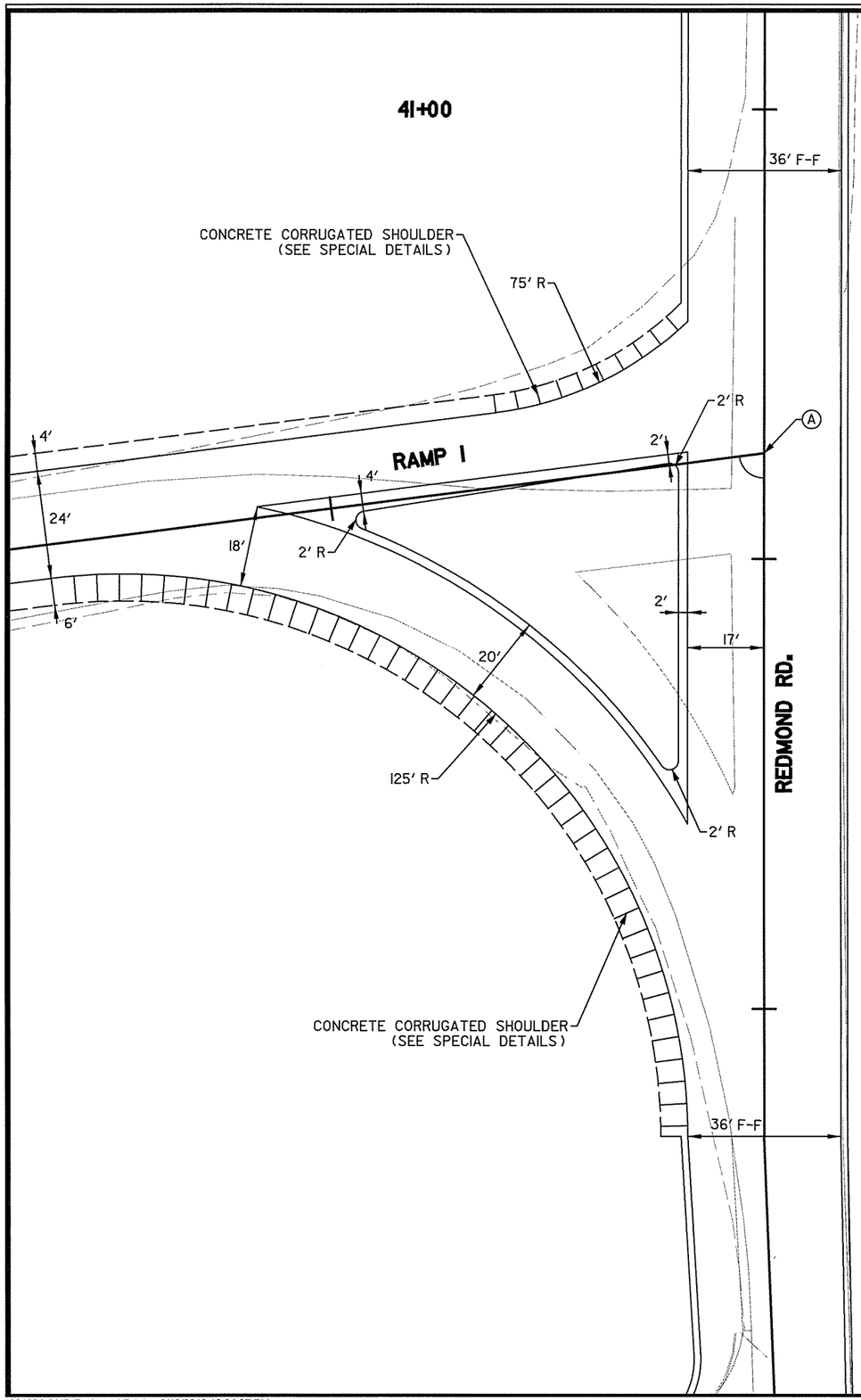

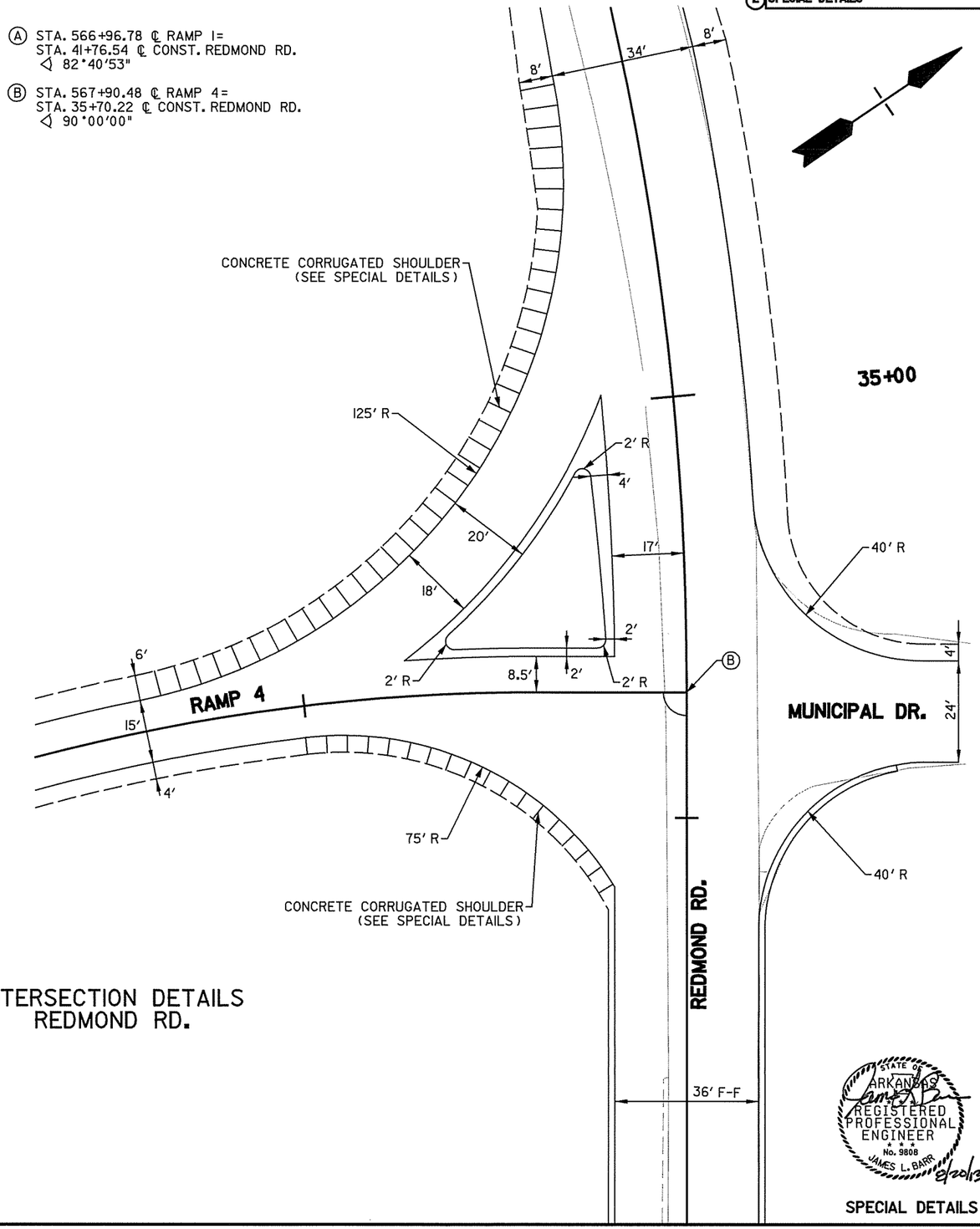

INTERSECTION DETAILS
REDMOND RD.

STATE OF ARKANSAS
REGISTERED PROFESSIONAL ENGINEER
No. 9808
JAMES L. BARR
8/20/13

SPECIAL DETAILS

r061276.PMD Redmond Rd.dgn 8/19/2013 12:04:27 PM

DATE REVISED	DATE FILMED	DATE REVISED	DATE FILMED	FED.RD. DIST.NO.	STATE	FED.AID PROJ.NO.	SHEET NO.	TOTAL SHEETS
				6	ARK.			
				JOB NO.		061276	39	438

(2) SPECIAL DETAILS

Ⓐ STA. 590+53.30 ℄ SCHOOL DR.=
STA. 202+05.96 ℄ CONST.MAIN ST.
◁ 60°27'32"

Ⓑ STA. 100+00.00 ℄ T.P. WHITE DR. =
STA. 201+92.47 ℄ CONST. MAIN ST.
◁ 104°21'05"

Ⓒ STA. 589+42.30 ℄ RAMP 4=
STA. 197+62.86 ℄ CONST.MAIN ST.
◁ 91°32'41"

Ⓓ STA. 344+43.03 ℄ MARSHALL RD. =
STA. 197+80.59 ℄ CONST. MAIN ST.
◁ 82°53'51"

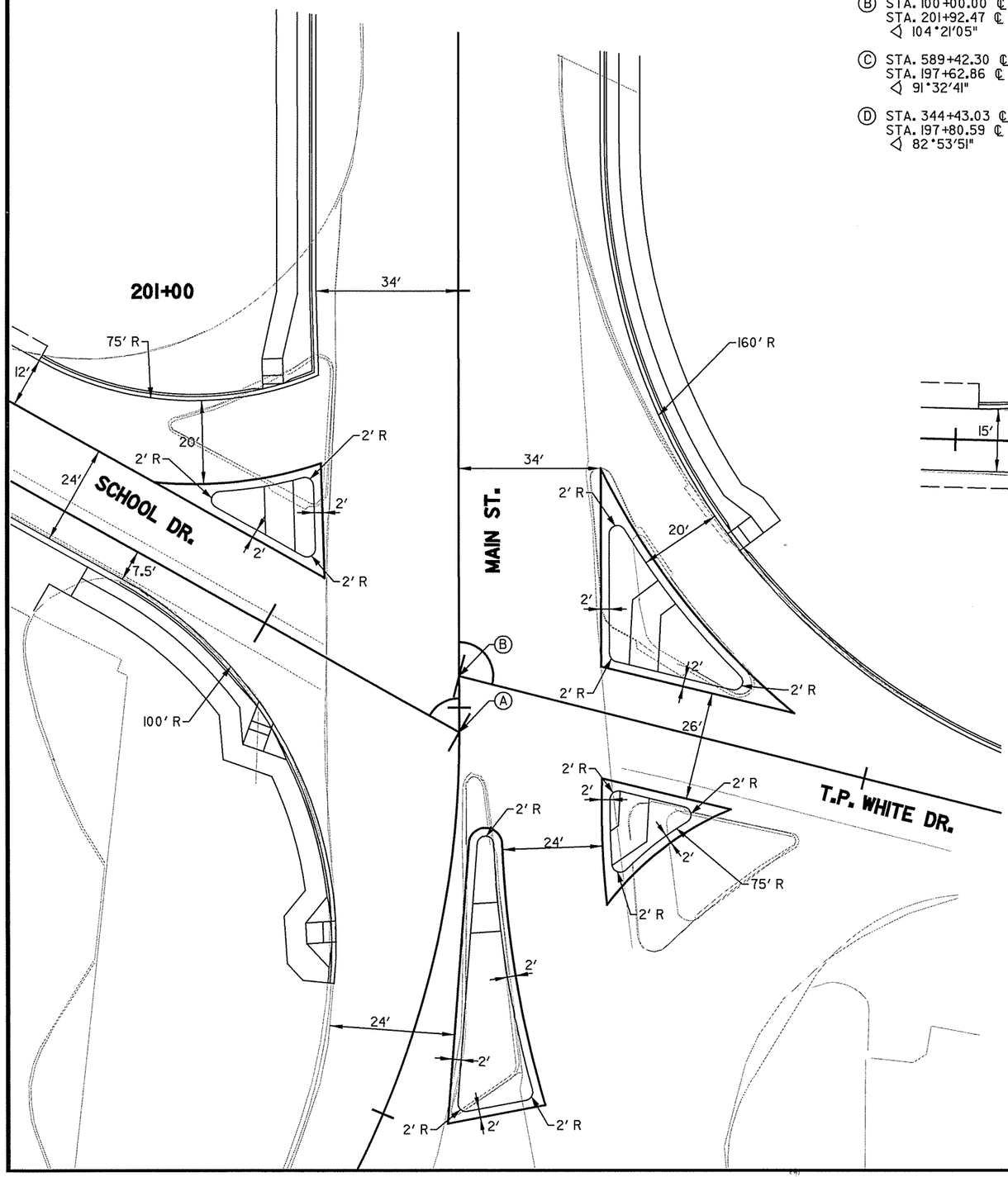

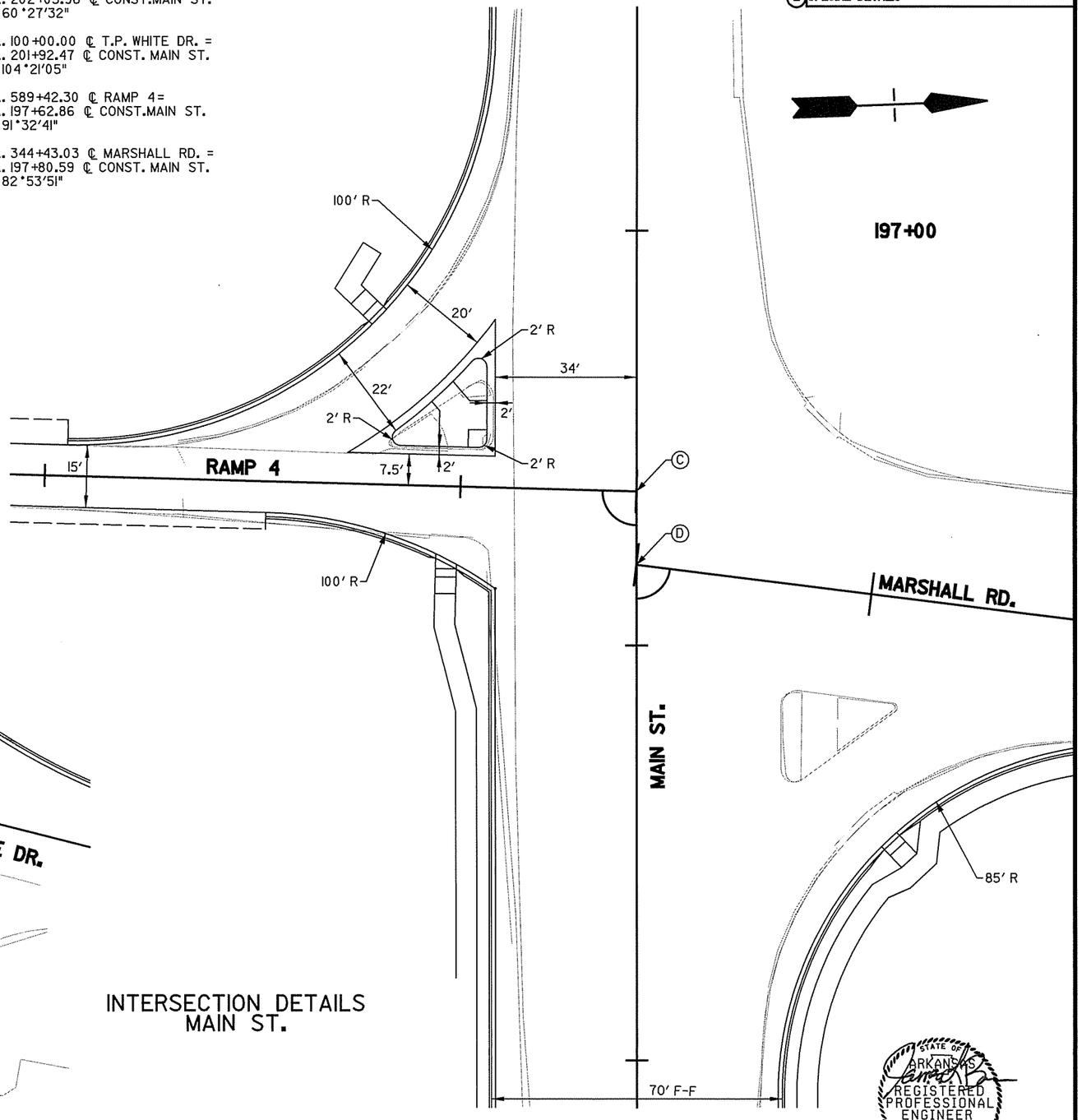

INTERSECTION DETAILS
MAIN ST.

STATE OF ARKANSAS
REGISTERED PROFESSIONAL ENGINEER
No. 9808
JAMES L. BARR
8/20/13

SPECIAL DETAILS

DATE REVISED	DATE FILMED	DATE REVISED	DATE FILMED	FED.RD. DIST.NO.	STATE	FED.AID PROJ.NO.	SHEET NO.	TOTAL SHEETS
				6	ARK.			
				JOB NO.		061276	39A	438

(2) SPECIAL DETAILS

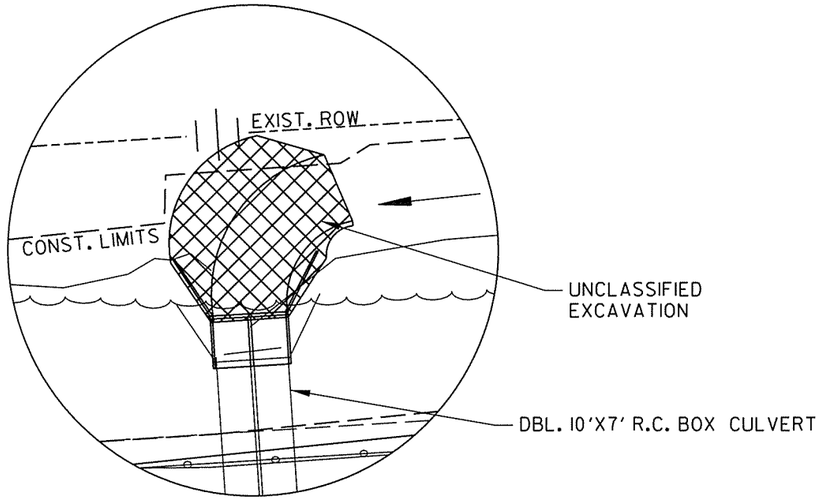

HWY. 67 BOX CULVERT STA. 539+63
(UPSTREAM FACE)

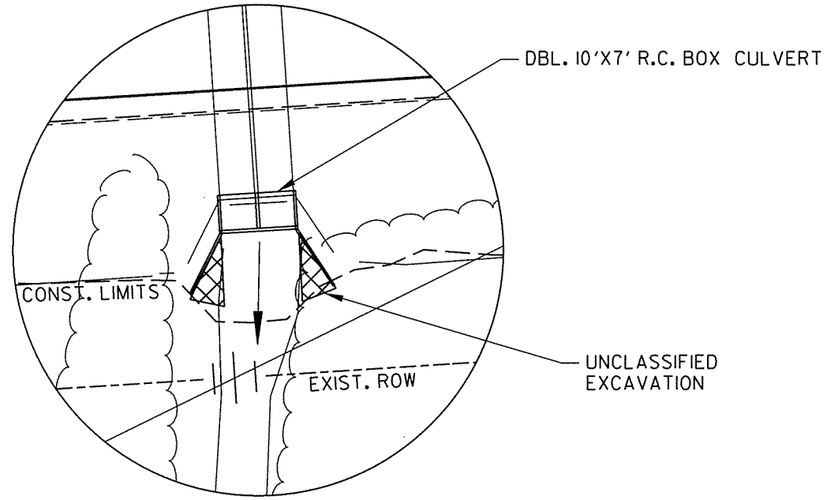

HWY. 67 BOX CULVERT STA. 539+63
(DOWNSTREAM FACE)

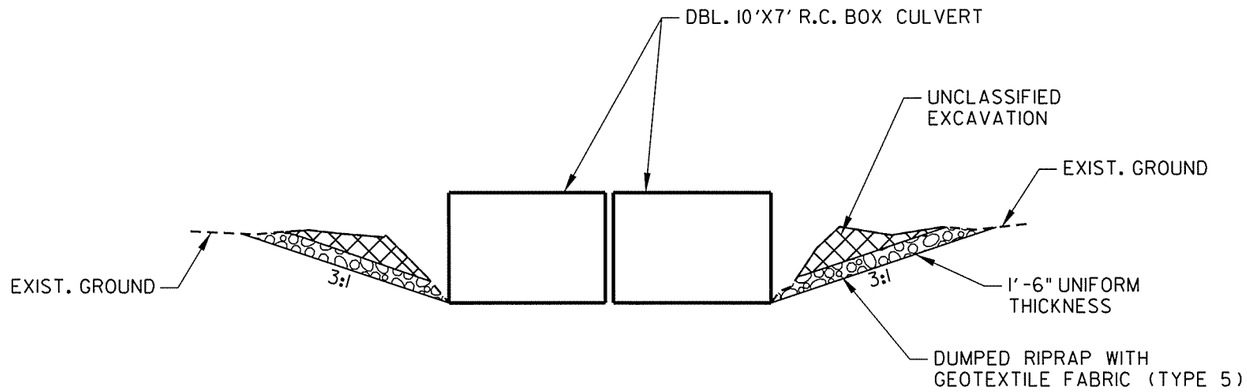

HWY. 67 BOX CULVERT STA. 539+63
(UPSTREAM AND DOWNSTREAM FACES)

STATE OF ARKANSAS
REGISTERED PROFESSIONAL ENGINEER
No. 9808
JAMES L. BARR
12/5/13

SPECIAL DETAILS

12/3/2013 9:37:30 AM

DATE REVISED	DATE FILMED	DATE REVISED	DATE FILMED	FED.RD. DIST.NO.	STATE	FED.AID PROJ.NO.	SHEET NO.	TOTAL SHEETS
				6	ARK.			
				JOB NO.		061276	39B	438

(2) SPECIAL DETAILS

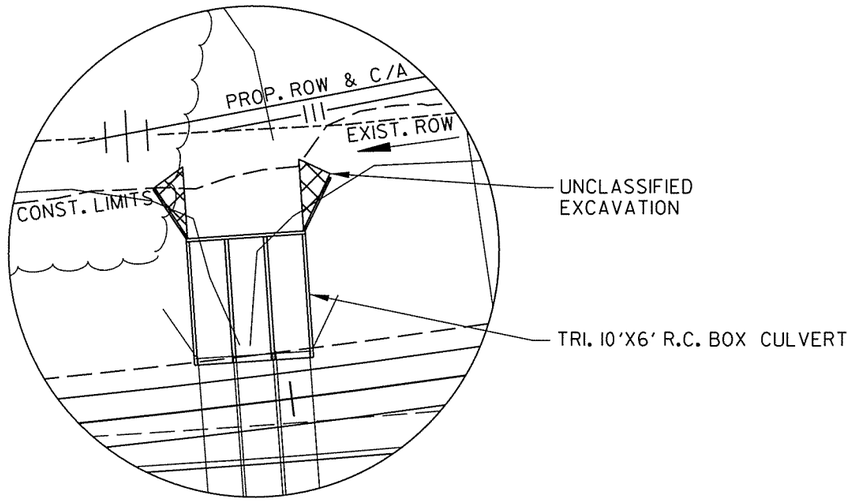

HWY. 67 BOX CULVERT STA. 549+95
(UPSTREAM FACE)

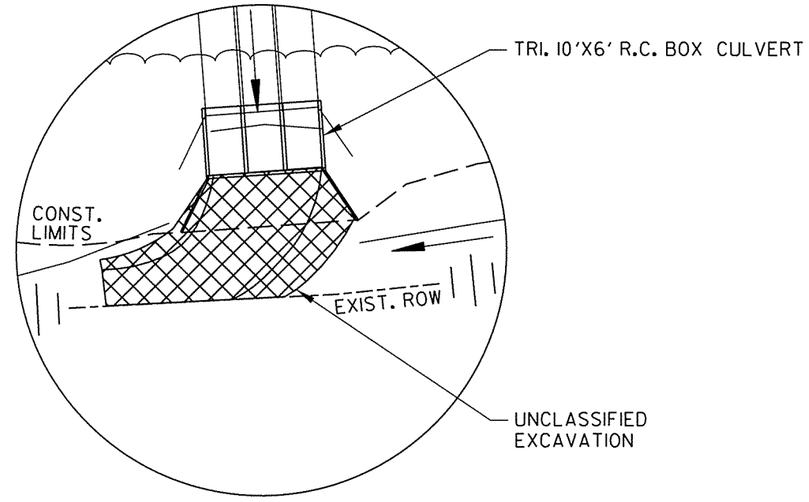

HWY. 67 BOX CULVERT STA. 549+95
(DOWNSTREAM FACE)

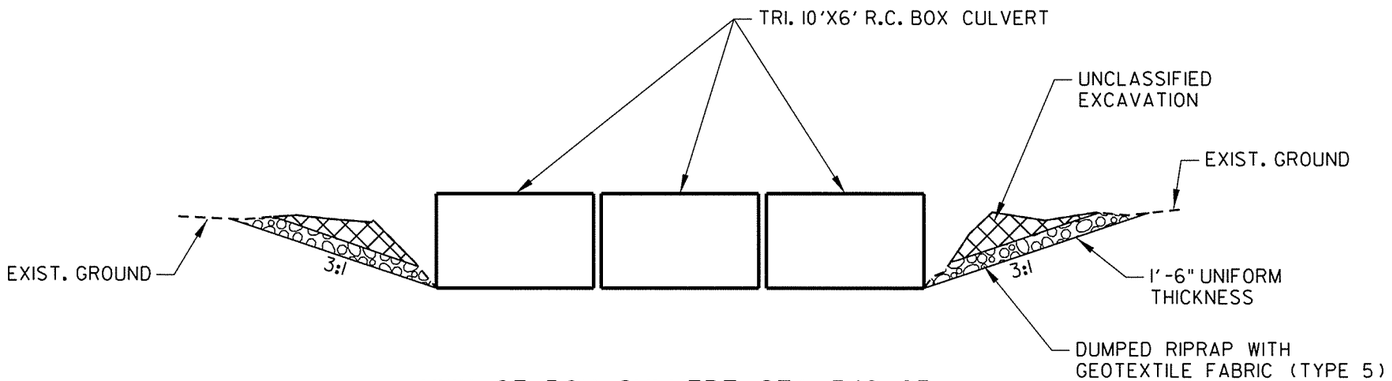

HWY. 67 BOX CULVERT STA. 549+95
(UPSTREAM AND DOWNSTREAM FACES)

STATE OF ARKANSAS
REGISTERED PROFESSIONAL ENGINEER
No. 9808
JAMES L. BARR
12/4/13

SPECIAL DETAILS

12/3/2013 9:37:40 AM

DATE REVISED	DATE FILMED	DATE REVISED	DATE FILMED	FED.RD. DIST.NO.	STATE	FED.AID PROJ.NO.	SHEET NO.	TOTAL SHEETS
				6	ARK.			
				JOB NO.		061276	39C	438
				(2) SPECIAL DETAILS				

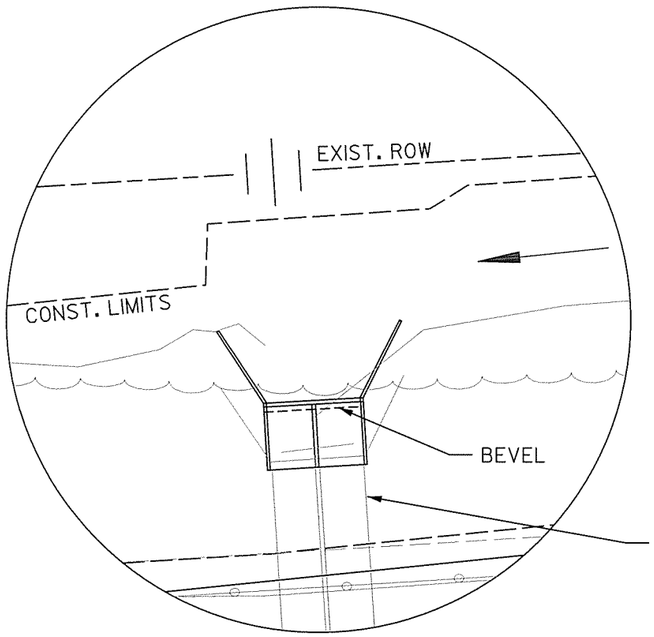

PLAN VIEW

HWY. 67 BOX CULVERT STA. 539+63 (UPSTREAM END) BEVEL DETAIL

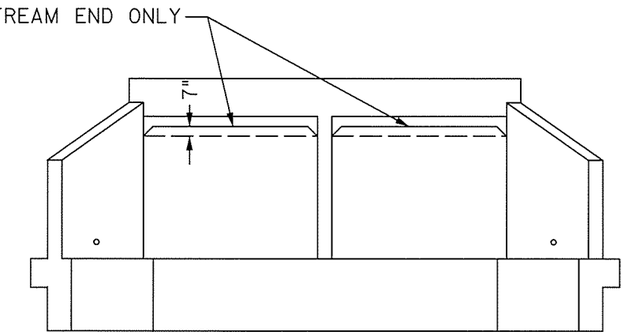

END SECTION VIEW

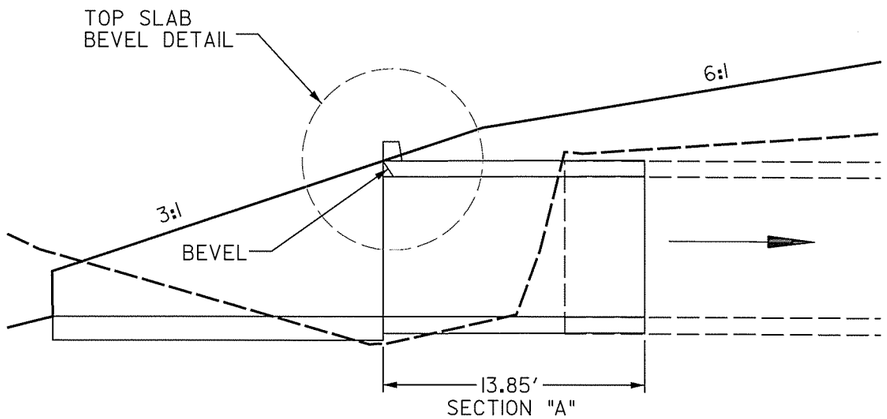

CULVERT SECTION VIEW

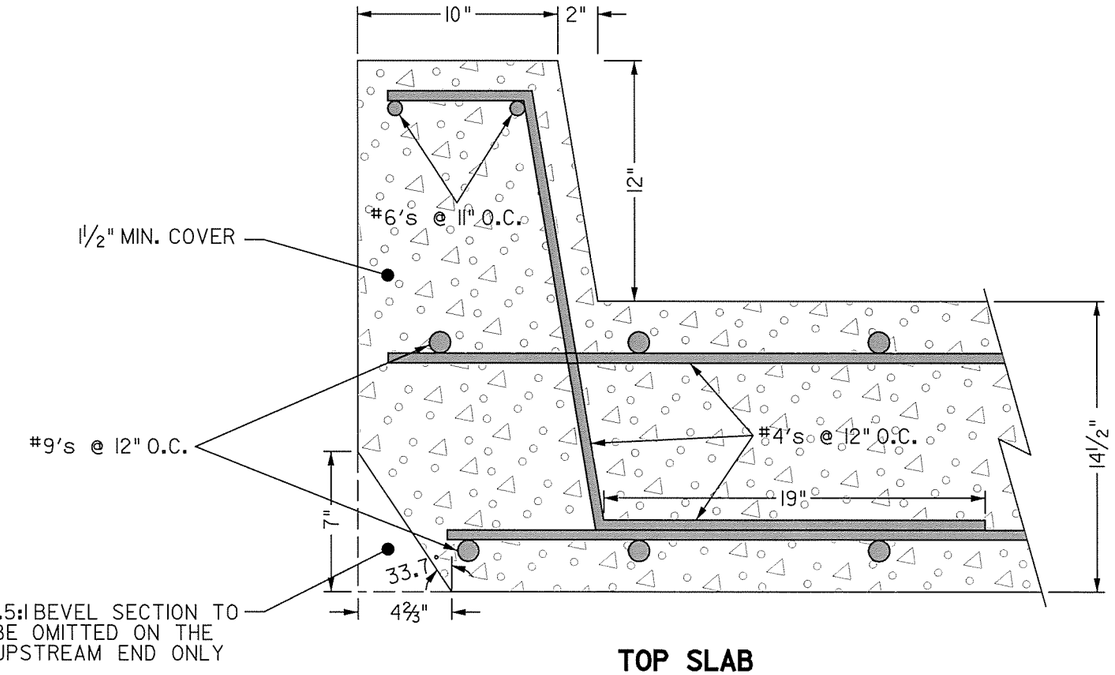

TOP SLAB
BEVEL DETAIL

STATE OF ARKANSAS
REGISTERED PROFESSIONAL ENGINEER
No. 9808
JAMES L. BARR
12/5/13

SPECIAL DETAILS

DATE REVISED	DATE FILMED	DATE REVISED	DATE FILMED	FED.RD. DIST.NO.	STATE	FED.AID PROJ.NO.	SHEET NO.	TOTAL SHEETS
				6	ARK.			
				JOB NO.		061276	39D	438

(2) SPECIAL DETAILS

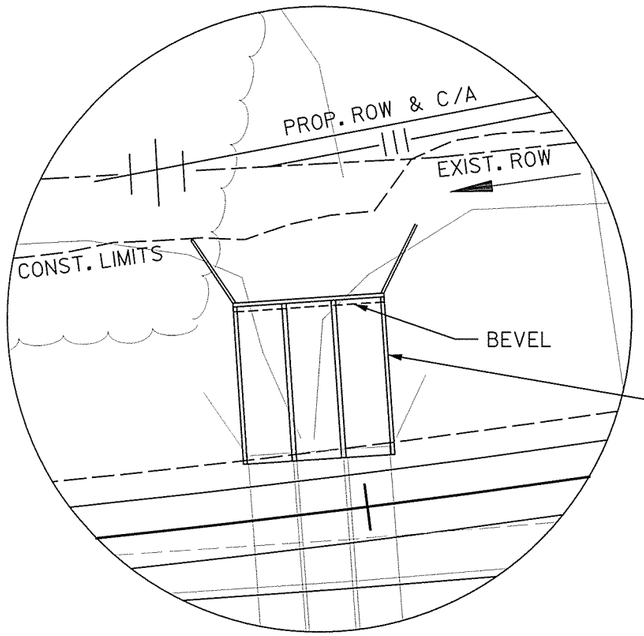

PLAN VIEW

HWY. 67 BOX CULVERT STA. 549+95 (UPSTREAM END) BEVEL DETAIL

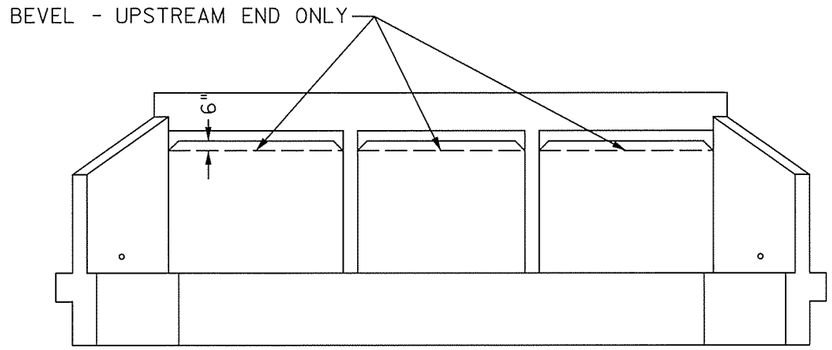

END SECTION VIEW

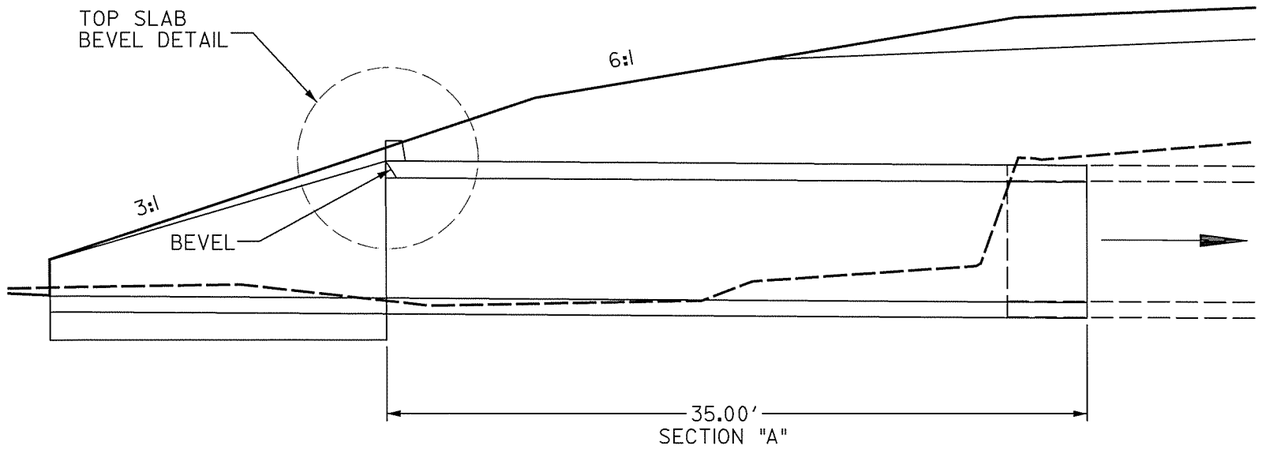

CULVERT SECTION VIEW

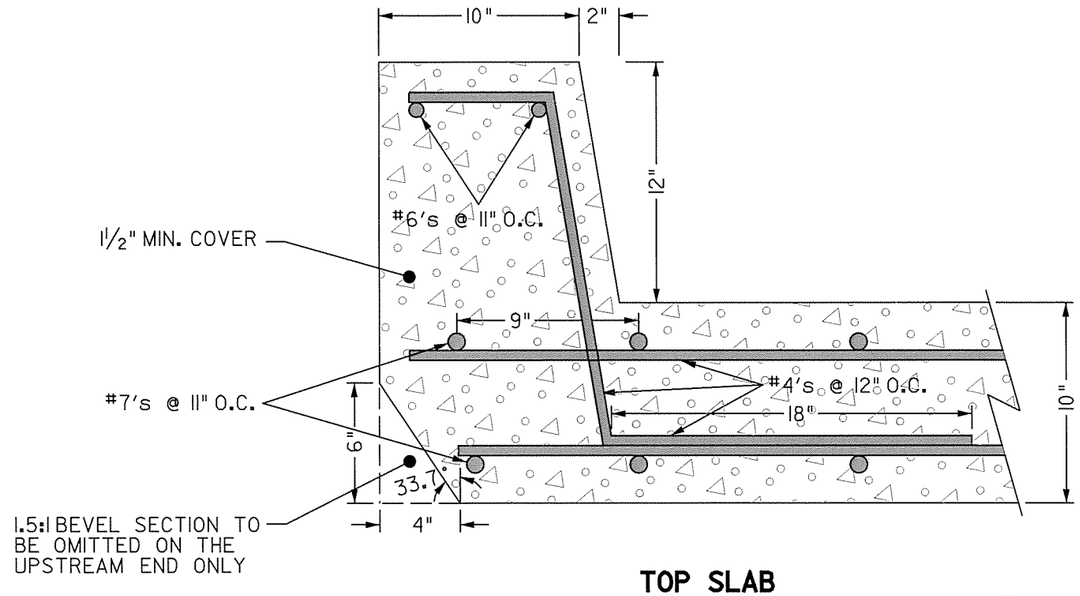

TOP SLAB BEVEL DETAIL

STATE OF ARKANSAS REGISTERED PROFESSIONAL ENGINEER No. 9808 JAMES L. BARR 12/5/13

SPECIAL DETAILS

NOTE:
ALL DEVICES INSTALLED AT ANY STAGE SHALL REMAIN IN PLACE UNTIL FINAL STABILIZATION OF THE AREA HAS BEEN ACCOMPLISHED.

STAGE CONST.

TEMPORARY WIDENING

DATE REVISED	DATE FILMED	DATE REVISED	DATE FILMED	FED.RD. DIST.NO.	STATE	FED.AID PROJ.NO.	SHEET NO.	TOTAL SHEETS
				6	ARK.			
				JOB NO.		061276	40	438

(2) TEMPORARY EROSION CONTROL DETAILS

STA. 534+00.00 ℄ CONST. HWY. 67
BEGIN JOB 061276

FLOOD PLAIN LINE

EXIST. ROW & C/A

℄ CONST. HWY. 67

N 51°51'35" E

OVERHEAD ELECTRIC

ROCKY BRANCH

530+00 535+00 540+00

EROSION CONTROL LEGEND

E-5	SAND BAG DITCH CHECK
E-7	DROP INLET SILT FENCE
E-11	SILT FENCE

REVISIONS

DATE	DESCRIPTION

STAGE CONST.

TEMPORARY WIDENING

EXIST. ROW & C/A

PROP. ROW & C/A

GRADE TO DRAIN (AS NEEDED)

CONST. LIMITS

GUARDRAIL

BILLBOARD

PCC

℄ CONST. HWY. 67

N 38°19'26" E

545+00 550+00 555+00

STATE OF ARKANSAS
REGISTERED PROFESSIONAL ENGINEER
No. 9808
JAMES L. BARR
8/20/13

STAGE IA
TEMPORARY EROSION CONTROL DETAILS

r061276.ec1A.dgn 8/19/2013 12:04:28 PM

DATE REVISED	DATE FILMED	DATE REVISED	DATE FILMED	FED.RD. DIST.NO.	STATE	FED.AID PROJ.NO.	SHEET NO.	TOTAL SHEETS
				6	ARK.			
				JOB NO.		061276	41	438

(2) TEMPORARY EROSION CONTROL DETAILS

REVISIONS

DATE	DESCRIPTION

EROSION CONTROL LEGEND

(E-5)	SAND BAG DITCH CHECK
(E-7)	DROP INLET SILT FENCE
• —(E-11)— •	SILT FENCE

STAGE CONST.

TEMPORARY WIDENING

NOTE:
ALL DEVICES INSTALLED AT ANY STAGE SHALL REMAIN IN PLACE UNTIL FINAL STABILIZATION OF THE AREA HAS BEEN ACCOMPLISHED.

STATE OF ARKANSAS
REGISTERED PROFESSIONAL ENGINEER
No. 9808
JAMES L. BARR
8/24/13

STAGE IA
TEMPORARY EROSION CONTROL DETAILS

r061276.ec1A.dgn 8/19/2013 12:04:29 PM

EROSION CONTROL LEGEND

E-5	SAND BAG DITCH CHECK
E-7	DROP INLET SILT FENCE
• E-11 •	SILT FENCE

DATE REVISED	DATE FILMED	DATE REVISED	DATE FILMED	FED.RD. DIST.NO.	STATE	FED.AID PROJ.NO.	SHEET NO.	TOTAL SHEETS
				6	ARK.			
				JOB NO.		061276	42	438

(2) TEMPORARY EROSION CONTROL DETAILS

PROP. ROW & C/A
OVERHEAD ELECTRIC
EXIST. ROW & C/A
℄ CONST. HWY. 67
PAVED PARKING
EXIST. C/A
EXIST. ROW
SANITARY SEWER
STORM SEWER
PROP. ROW
570+00
575+00
580+00
585+00
590+00
595+00
200+00
T.C.E.
GAS LINE
WATER LINE
FIBER OPTIC
WEST MAIN
SIGN

REVISIONS

DATE	DESCRIPTION

NOTE:
ALL DEVICES INSTALLED AT ANY STAGE SHALL REMAIN IN PLACE UNTIL FINAL STABILIZATION OF THE AREA HAS BEEN ACCOMPLISHED.

TEMPORARY WIDENING

STATE OF ARKANSAS
REGISTERED PROFESSIONAL ENGINEER
No. 9808
JAMES L. BARR
8/20/13

STAGE IA
TEMPORARY EROSION CONTROL DETAILS

r061276.ec1A.dan 8/19/2013 12:04:29 PM

DATE REVISED	DATE FILMED	DATE REVISED	DATE FILMED

FED.RD. DIST.NO.	STATE	FED.AID PROJ.NO.	SHEET NO.	TOTAL SHEETS
6	ARK.			
JOB NO.		061276	43	438

(2) TEMPORARY EROSION CONTROL DETAILS

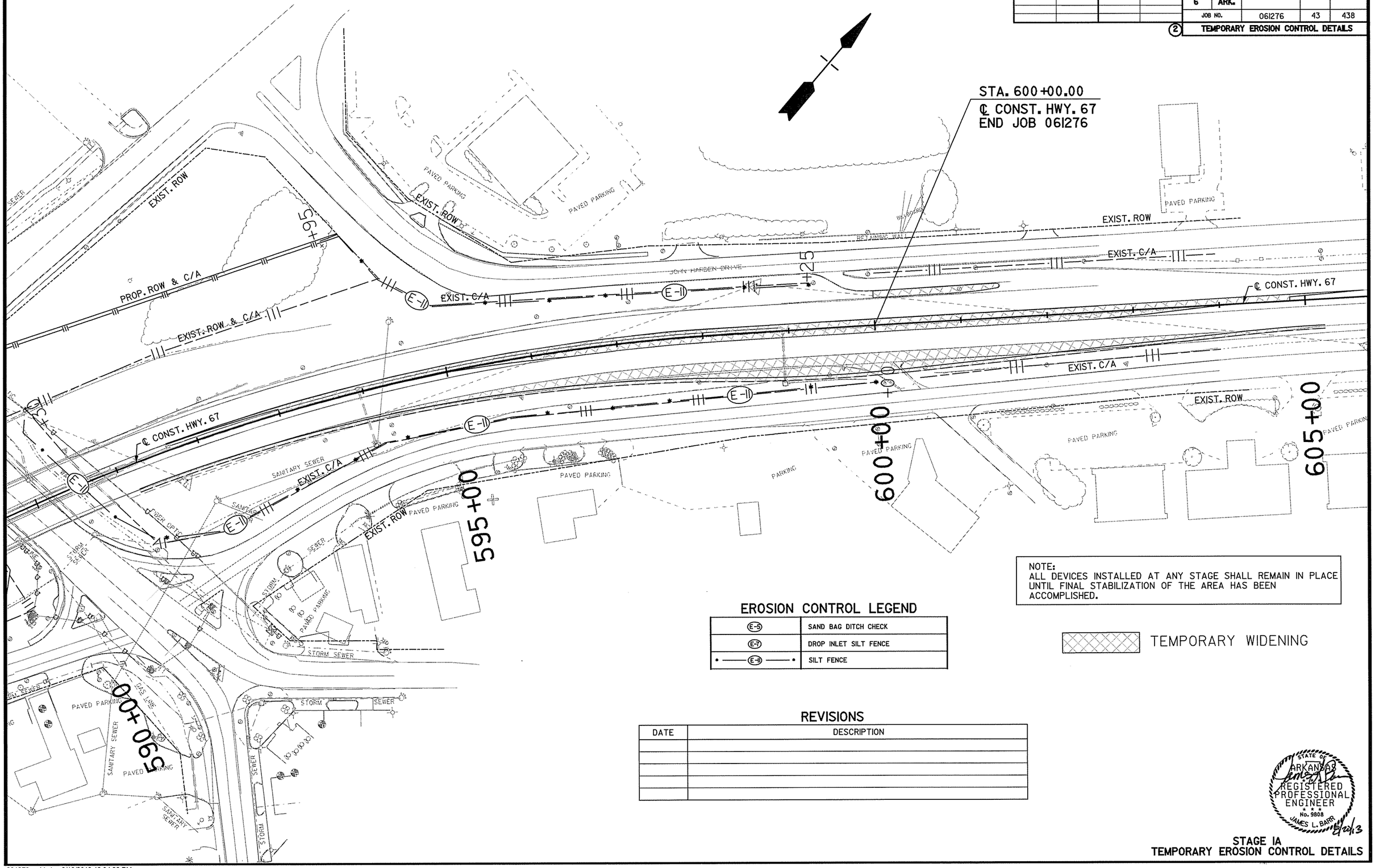

NOTE:
ALL DEVICES INSTALLED AT ANY STAGE SHALL REMAIN IN PLACE UNTIL FINAL STABILIZATION OF THE AREA HAS BEEN ACCOMPLISHED.

EROSION CONTROL LEGEND

(E-5)	SAND BAG DITCH CHECK
(E-7)	DROP INLET SILT FENCE
• —— (E-11) —— •	SILT FENCE

TEMPORARY WIDENING

REVISIONS

DATE	DESCRIPTION

STATE OF ARKANSAS
REGISTERED PROFESSIONAL ENGINEER
No. 9808
JAMES L. BARR
8/22/13

STAGE IA
TEMPORARY EROSION CONTROL DETAILS

r061276.ec1A.dgn 8/19/2013 12:04:30 PM

DATE REVISED	DATE FILMED	DATE REVISED	DATE FILMED	FED.RD. DIST.NO.	STATE	FED.AID PROJ.NO.	SHEET NO.	TOTAL SHEETS
				6	ARK.			
				JOB NO.		061276	44	438

(2) TEMPORARY EROSION CONTROL DETAILS

STAGE CONST.

STA. 534+00.00 ℄ CONST. HWY. 67
BEGIN JOB 061276

NOTE:
ALL DEVICES INSTALLED AT ANY STAGE SHALL REMAIN IN PLACE UNTIL FINAL STABILIZATION OF THE AREA HAS BEEN ACCOMPLISHED.

EROSION CONTROL LEGEND

E-5	SAND BAG DITCH CHECK
E-7	DROP INLET SILT FENCE
E-11	SILT FENCE

REVISIONS

DATE	DESCRIPTION

STATE OF ARKANSAS
REGISTERED PROFESSIONAL ENGINEER
No. 9808
JAMES L. BARR
8/20/13

STAGE IB
TEMPORARY EROSION CONTROL DETAILS

r061276.ec1B.dgn 8/19/2013 12:04:30 PM

DATE REVISED	DATE FILMED	DATE REVISED	DATE FILMED

FED.RD. DIST.NO.	STATE	FED.AID PROJ.NO.	SHEET NO.	TOTAL SHEETS
6	ARK.			
JOB NO.		061276	45	438

(2) TEMPORARY EROSION CONTROL DETAILS

NOTE:
ALL DEVICES INSTALLED AT ANY STAGE SHALL REMAIN IN PLACE UNTIL FINAL STABILIZATION OF THE AREA HAS BEEN ACCOMPLISHED.

REVISIONS

DATE	DESCRIPTION

EROSION CONTROL LEGEND

E-5	SAND BAG DITCH CHECK
E-7	DROP INLET SILT FENCE
E-8	DIVERSION DITCH
E-11	SILT FENCE
E-12	SLOPE DRAIN
	RIPRAP FOR SLOPE DRAIN

560+00
565+00
570+00
40+00
45+00
35+00
RAMP 4
EXIST. ROW & C/A
EXIST. ENT. RAMP TO REDMOND RD.
PROP. ROW & C/A
CONST. LIMITS
EXIST. HWY. 67
℄ CONST. HWY. 67
OVERHEAD ELECTRIC
SANITARY SEWER
EXIST. ROW
PROP. ROW
REDMOND RD.
RAILROAD
WATER LINE
PAVED PARKING
MUNICIPAL DR.
GOODSELL TRUCK ACCESSORIES
STAGE CONST.

STATE OF ARKANSAS
REGISTERED PROFESSIONAL ENGINEER
No. 9808
JAMES L. BARR
8/24/13

STAGE IB
TEMPORARY EROSION CONTROL DETAILS

r061276.ec1B.dgn 8/19/2013 12:04:31 PM

DATE REVISED	DATE FILMED	DATE REVISED	DATE FILMED

FED.RD. DIST.NO.	STATE	FED.AID PROJ.NO.	SHEET NO.	TOTAL SHEETS
6	ARK.			
JOB NO.		061276	46	438

(2) TEMPORARY EROSION CONTROL DETAILS

STAGE CONST.

NOTE:
ALL DEVICES INSTALLED AT ANY STAGE SHALL REMAIN IN PLACE UNTIL FINAL STABILIZATION OF THE AREA HAS BEEN ACCOMPLISHED.

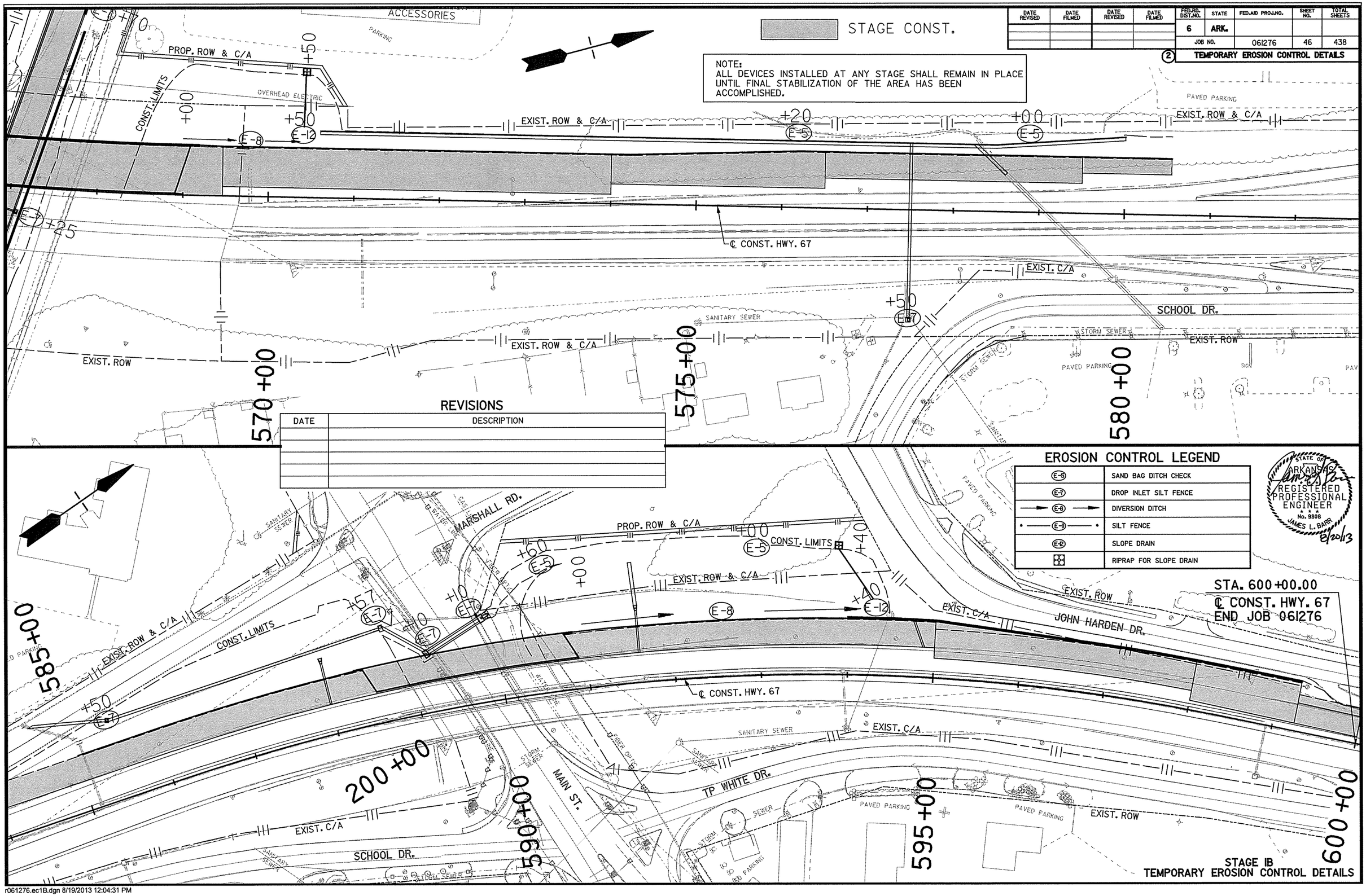

REVISIONS

DATE	DESCRIPTION

EROSION CONTROL LEGEND

E-5	SAND BAG DITCH CHECK
E-7	DROP INLET SILT FENCE
E-8	DIVERSION DITCH
E-11	SILT FENCE
E-12	SLOPE DRAIN
	RIPRAP FOR SLOPE DRAIN

STATE OF ARKANSAS
REGISTERED PROFESSIONAL ENGINEER
No. 9808
JAMES L. BARR
8/20/13

STA. 600+00.00
℄ CONST. HWY. 67
END JOB 061276

STAGE IB
TEMPORARY EROSION CONTROL DETAILS

r061276.ec1B.dgn 8/19/2013 12:04:31 PM

DATE REVISED	DATE FILMED	DATE REVISED	DATE FILMED	FED.RD. DIST.NO.	STATE	FED.AID PROJ.NO.	SHEET NO.	TOTAL SHEETS
				6	ARK.			
				JOB NO.		061276	47	438

(2) TEMPORARY EROSION CONTROL DETAILS

NOTE:
ALL DEVICES INSTALLED AT ANY STAGE SHALL REMAIN IN PLACE UNTIL FINAL STABILIZATION OF THE AREA HAS BEEN ACCOMPLISHED.

REVISIONS

DATE	DESCRIPTION

EROSION CONTROL LEGEND

E-5	SAND BAG DITCH CHECK
E-7	DROP INLET SILT FENCE
E-11	SILT FENCE

STAGE CONST.

STATE OF ARKANSAS
REGISTERED PROFESSIONAL ENGINEER
No. 9808
JAMES L. BARR
8/22/13

STAGE IC
TEMPORARY EROSION CONTROL DETAILS

r061276.ec1C.dgn 8/19/2013 12:04:32 PM

EROSION CONTROL LEGEND

STAGE CONST.	
(E-5)	SAND BAG DITCH CHECK
(E-7)	DROP INLET SILT FENCE
• —— (E-11) —— •	SILT FENCE

NOTE:
ALL DEVICES INSTALLED AT ANY STAGE SHALL REMAIN IN PLACE UNTIL FINAL STABILIZATION OF THE AREA HAS BEEN ACCOMPLISHED.

DATE REVISED	DATE FILMED	DATE REVISED	DATE FILMED	FED.RD. DIST.NO.	STATE	FED.AID PROJ.NO.	SHEET NO.	TOTAL SHEETS
				6	ARK.			
				JOB NO.		061276	48	438

(2) TEMPORARY EROSION CONTROL DETAILS

EXIST. ROW & C/A
OVERHEAD ELECTRIC
PROP. ROW & C/A
RAMP 4
GUARDRAIL
℄ CONST. HWY. 67
+50 (E-7)
+00 (E-7)
545+00
550+00
555+00
560+00
565+00
570+00
575+00
40+00
20+00
BILLBOARD
RAILROAD
PARKING
PI 21+34.84
PI 23+95.45
PRC 22+69.24
SANITARY SEWER
WATER LINE
EXIST. ENT. RAMP TO REDMOND RD.
REDMOND RD.
EXIST. ROW
EXIST. ROW & C/A

REVISIONS

DATE	DESCRIPTION

STATE OF ARKANSAS
REGISTERED PROFESSIONAL ENGINEER
No. 9808
JAMES L. BARR
8/19/13

STAGE 2
TEMPORARY EROSION CONTROL DETAILS

r061276.ec2.dan 8/19/2013 12:04:32 PM

DATE REVISED	DATE FILMED	DATE REVISED	DATE FILMED	FED.RD. DIST.NO.	STATE	FED.AID PROJ.NO.	SHEET NO.	TOTAL SHEETS
				6	ARK.			
				JOB NO.		061276	49	438

(2) TEMPORARY EROSION CONTROL DETAILS

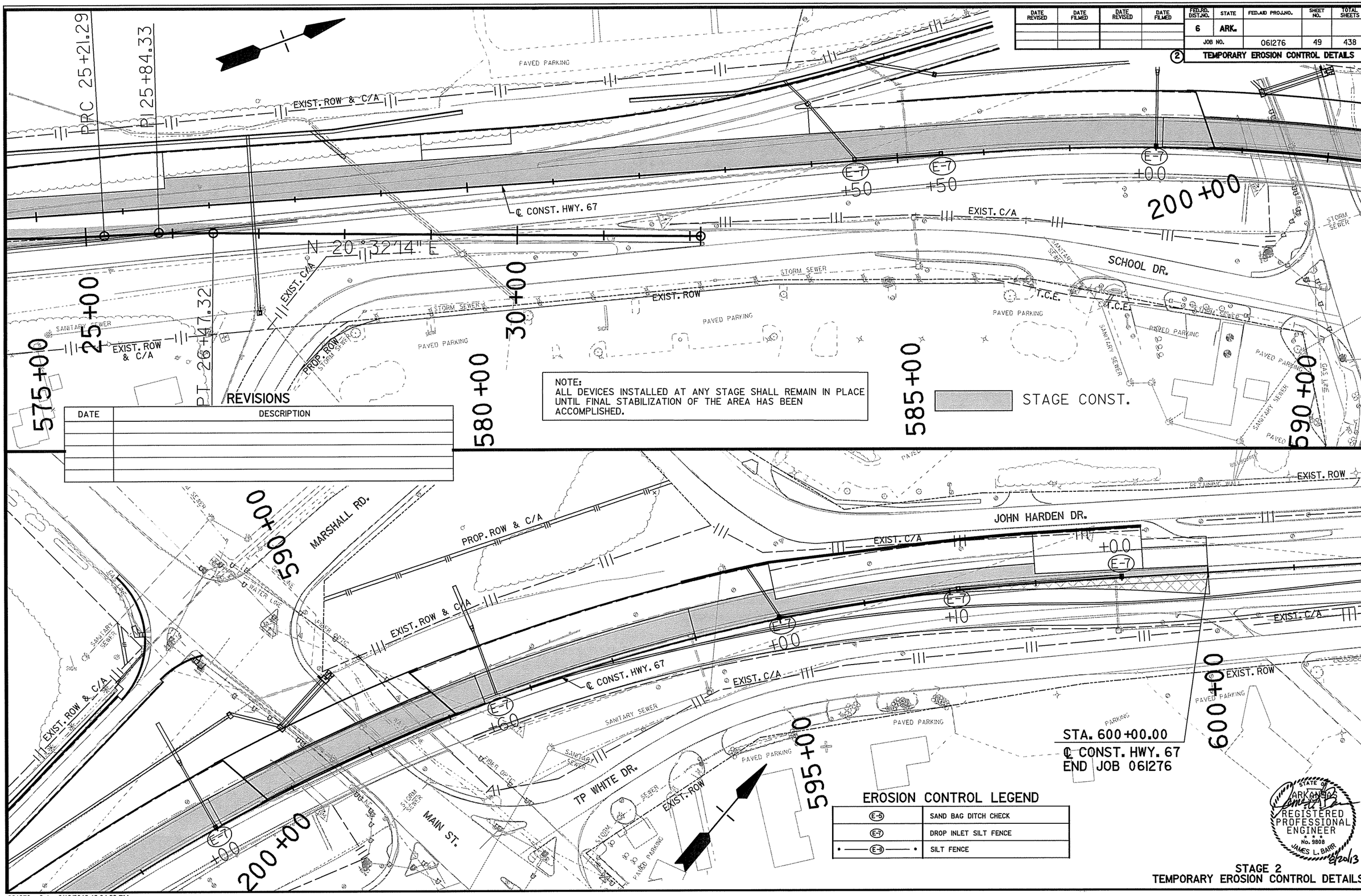

NOTE:
ALL DEVICES INSTALLED AT ANY STAGE SHALL REMAIN IN PLACE UNTIL FINAL STABILIZATION OF THE AREA HAS BEEN ACCOMPLISHED.

REVISIONS

DATE	DESCRIPTION

EROSION CONTROL LEGEND

E-5	SAND BAG DITCH CHECK
E-7	DROP INLET SILT FENCE
E-11	SILT FENCE

STATE OF ARKANSAS REGISTERED PROFESSIONAL ENGINEER No. 9808 JAMES L. BARR 8/20/13

STAGE 2
TEMPORARY EROSION CONTROL DETAILS

r061276 ec2.dgn 8/19/2013 12:04:33 PM

DATE REVISED	DATE FILMED	DATE REVISED	DATE FILMED

FED.RD. DIST.NO.	STATE	FED.AID PROJ.NO.	SHEET NO.	TOTAL SHEETS
6	ARK.			
JOB NO.		061276	50	438

(2) TEMPORARY EROSION CONTROL DETAILS

STA. 534+00.00 ℄ CONST. HWY. 67
BEGIN JOB 061276

NOTE:
ALL DEVICES INSTALLED AT ANY STAGE SHALL REMAIN IN PLACE UNTIL FINAL STABILIZATION OF THE AREA HAS BEEN ACCOMPLISHED.

STAGE CONST.

STAGE CONST. AFTER REDMOND RD. EXIT RAMP CLOSURE

EROSION CONTROL LEGEND

E-5	SAND BAG DITCH CHECK
E-7	DROP INLET SILT FENCE
• E-11 •	SILT FENCE

REVISIONS

DATE	DESCRIPTION

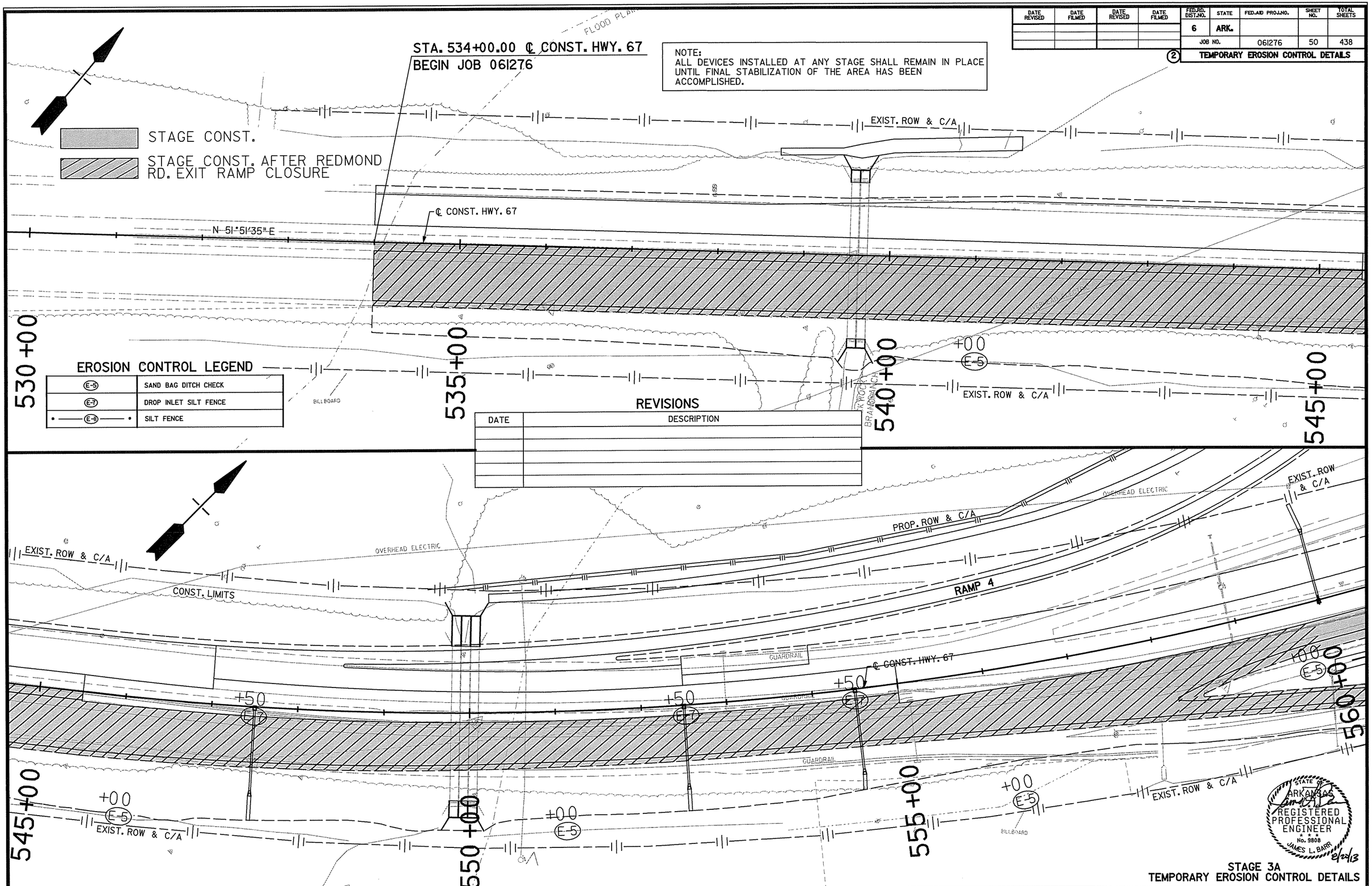

STATE OF ARKANSAS
REGISTERED PROFESSIONAL ENGINEER
No. 9808
JAMES L. BARR
8/22/13

STAGE 3A
TEMPORARY EROSION CONTROL DETAILS

r061276.ec3A.dgn 8/19/2013 12:26:01 PM

DATE REVISED	DATE FILMED	DATE REVISED	DATE FILMED	FED.RD. DIST.NO.	STATE	FED.AID PROJ.NO.	SHEET NO.	TOTAL SHEETS
				6	ARK.			
				JOB NO.		061276	51	438

(2) TEMPORARY EROSION CONTROL DETAILS

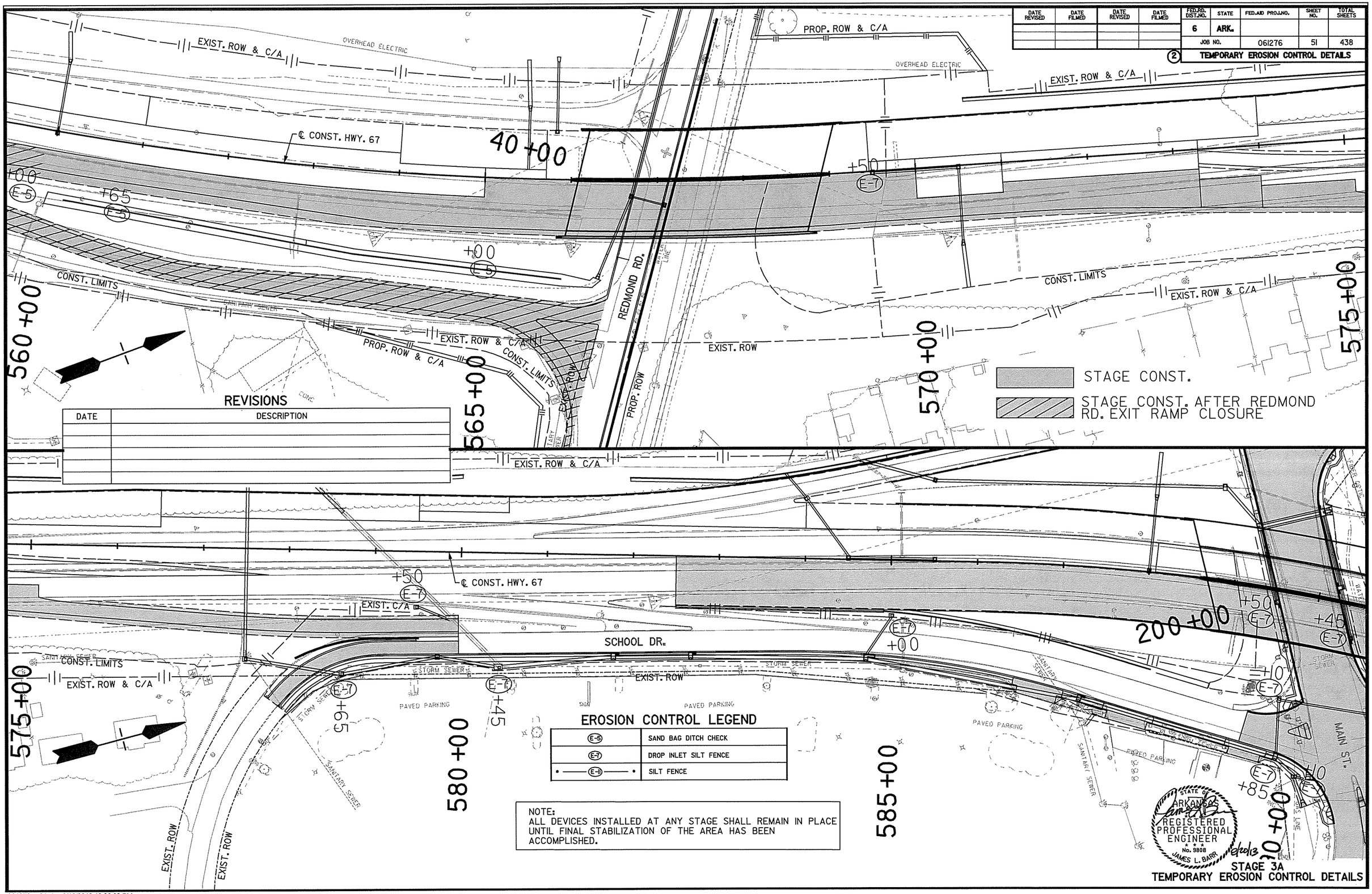

REVISIONS

DATE	DESCRIPTION

EROSION CONTROL LEGEND

E-5	SAND BAG DITCH CHECK
E-7	DROP INLET SILT FENCE
E-11	SILT FENCE

NOTE:
ALL DEVICES INSTALLED AT ANY STAGE SHALL REMAIN IN PLACE UNTIL FINAL STABILIZATION OF THE AREA HAS BEEN ACCOMPLISHED.

STATE OF ARKANSAS
REGISTERED PROFESSIONAL ENGINEER
No. 9808
JAMES L. BARR
8/20/13

STAGE 3A
TEMPORARY EROSION CONTROL DETAILS

r061276.ec3A.dgn 8/19/2013 12:26:02 PM

DATE REVISED	DATE FILMED	DATE REVISED	DATE FILMED	FED.RD. DIST.NO.	STATE	FED.AID PROJ.NO.	SHEET NO.	TOTAL SHEETS
				6	ARK.			
				JOB NO.		061276	52	438

(2) TEMPORARY EROSION CONTROL DETAILS

REVISIONS

DATE	DESCRIPTION

EROSION CONTROL LEGEND

(E-5)	SAND BAG DITCH CHECK
(E-7)	DROP INLET SILT FENCE
• —— (E-11) —— •	SILT FENCE

STAGE CONST.

STA. 600+00.00
℄ CONST. HWY. 67
END JOB 061276

NOTE:
ALL DEVICES INSTALLED AT ANY STAGE SHALL REMAIN IN PLACE UNTIL FINAL STABILIZATION OF THE AREA HAS BEEN ACCOMPLISHED.

STATE OF ARKANSAS
REGISTERED PROFESSIONAL ENGINEER
No. 9808
JAMES L. BARR
8/20/13

STAGE 3A
TEMPORARY EROSION CONTROL DETAILS

r061276.ec3A.dgn 8/19/2013 12:04:35 PM

DATE REVISED	DATE FILMED	DATE REVISED	DATE FILMED	FED.RD. DIST.NO.	STATE	FED.AID PROJ.NO.	SHEET NO.	TOTAL SHEETS
				6	ARK.			
				JOB NO.		061276	53	438

(2) TEMPORARY EROSION CONTROL DETAILS

NOTE:
ALL DEVICES INSTALLED AT ANY STAGE SHALL REMAIN IN PLACE UNTIL FINAL STABILIZATION OF THE AREA HAS BEEN ACCOMPLISHED.

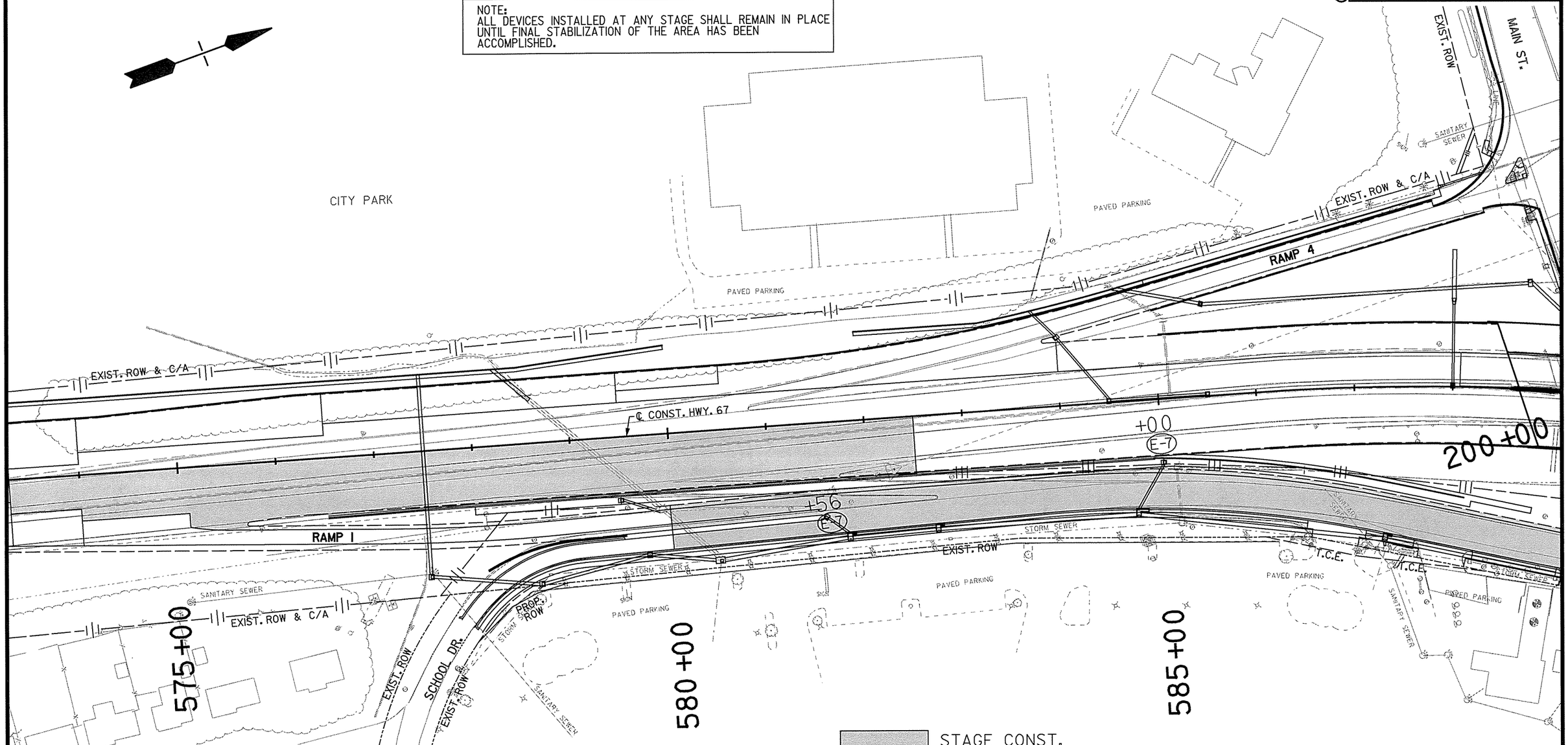

REVISIONS

DATE	DESCRIPTION

EROSION CONTROL LEGEND

E-5	SAND BAG DITCH CHECK
E-7	DROP INLET SILT FENCE
• E-11 •	SILT FENCE

STATE OF ARKANSAS
REGISTERED PROFESSIONAL ENGINEER
No. 9808
JAMES L. BARR
8/22/13

STAGE 3B
TEMPORARY EROSION CONTROL DETAILS

r061276.ec3B.dgn 8/19/2013 12:15:11 PM

DATE REVISED	DATE FILMED	DATE REVISED	DATE FILMED

FED.RD. DIST.NO.	STATE	FED.AID PROJ.NO.	SHEET NO.	TOTAL SHEETS
6	ARK.			
JOB NO.		061276	54	438

(2) TEMPORARY EROSION CONTROL DETAILS

EROSION CONTROL LEGEND

(E-5)	SAND BAG DITCH CHECK
(E-7)	DROP INLET SILT FENCE
• —(E-11)— •	SILT FENCE

NOTE:
ALL DEVICES INSTALLED AT ANY STAGE SHALL REMAIN IN PLACE UNTIL FINAL STABILIZATION OF THE AREA HAS BEEN ACCOMPLISHED.

STAGE CONST.

STA. 534+00.00 ℄ CONST. HWY. 67
BEGIN JOB 061276

FLOOD PLAIN

EXIST. ROW & C/A

℄ CONST. HWY. 67

N 51°51'35" E

+55
(E-7)

OVERHEAD ELECTRIC

535+00

540+00

545+00

BILLBOARD

ROCK BRANCH

EXIST. ROW & C/A

REVISIONS

DATE	DESCRIPTION

STA. 600+00.00
℄ CONST. HWY. 67
END JOB 061276

SANITARY SEWER

MARSHALL RD.

EXIST. ROW

PAVED PARKING

RETAINING WALL

BILLBOARD

PROP. ROW & C/A

JOHN HARDEN DR.

EXIST. C/A

+00
(E-7)

EXIST. ROW & C/A

FIBER OPTIC

℄ CONST. HWY. 67

WATER LINE

SANITARY SEWER

TP WHITE DR.

EXIST. C/A

STORM SEWER

MAIN ST.

595+00

600+00

605+00

PAVED PARKING

PARKING

STATE OF ARKANSAS
REGISTERED PROFESSIONAL ENGINEER
No. 9808
JAMES L. BARR
8/20/13

STAGE 3C
TEMPORARY EROSION CONTROL DETAILS

r061276.ec3C.dgn 8/19/2013 12:15:11 PM

DATE REVISED	DATE FILMED	DATE REVISED	DATE FILMED	FED.RD. DIST.NO.	STATE	FED. AID PROJ. NO.	SHEET NO.	TOTAL SHEETS
				6	ARK.			
				JOB NO.		061276	55	438

(2) **MAINTENANCE OF TRAFFIC DETAILS**

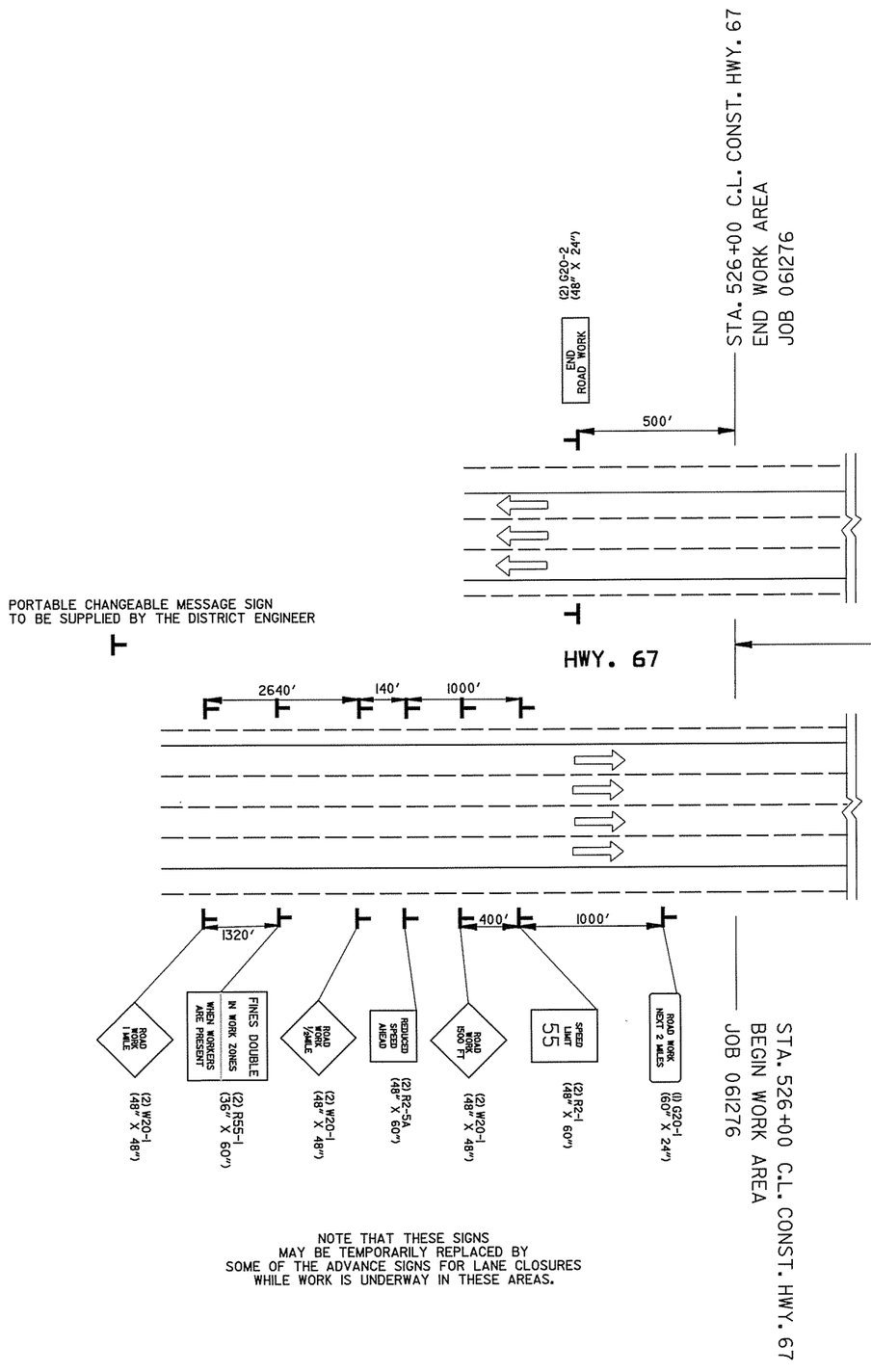

NOTE THAT THESE SIGNS MAY BE TEMPORARILY REPLACED BY SOME OF THE ADVANCE SIGNS FOR LANE CLOSURES WHILE WORK IS UNDERWAY IN THESE AREAS.

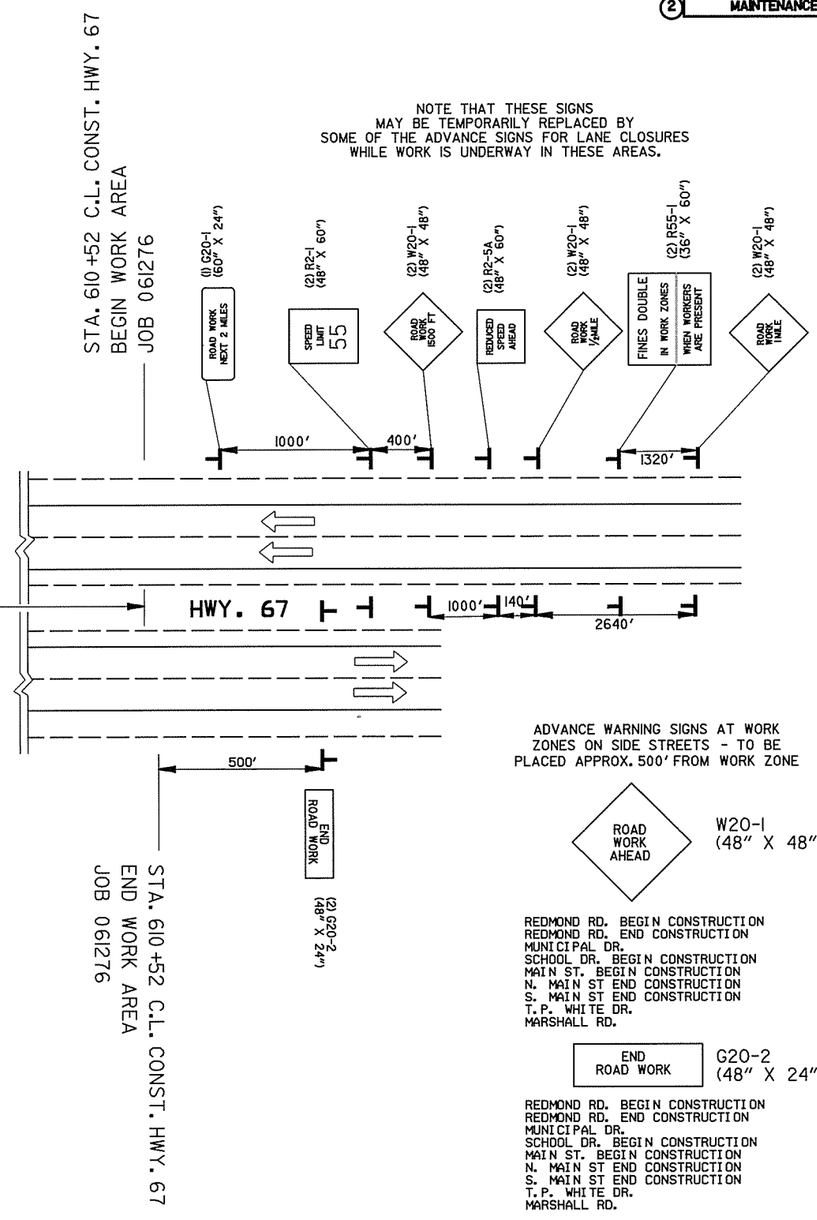

NOTE THAT THESE SIGNS MAY BE TEMPORARILY REPLACED BY SOME OF THE ADVANCE SIGNS FOR LANE CLOSURES WHILE WORK IS UNDERWAY IN THESE AREAS.

ADVANCE WARNING SIGNS AT WORK ZONES ON SIDE STREETS - TO BE PLACED APPROX. 500' FROM WORK ZONE

ROAD WORK AHEAD — W20-1 (48" X 48")

REDMOND RD. BEGIN CONSTRUCTION
REDMOND RD. END CONSTRUCTION
MUNICIPAL DR.
SCHOOL DR. BEGIN CONSTRUCTION
MAIN ST. BEGIN CONSTRUCTION
N. MAIN ST END CONSTRUCTION
S. MAIN ST END CONSTRUCTION
T.P. WHITE DR.
MARSHALL RD.

END ROAD WORK — G20-2 (48" X 24")

REDMOND RD. BEGIN CONSTRUCTION
REDMOND RD. END CONSTRUCTION
MUNICIPAL DR.
SCHOOL DR. BEGIN CONSTRUCTION
MAIN ST. BEGIN CONSTRUCTION
N. MAIN ST END CONSTRUCTION
S. MAIN ST END CONSTRUCTION
T.P. WHITE DR.
MARSHALL RD.

ADVANCE WARNING SIGNS AT BEGINNING AND END OF JOB 061276
ALL STAGES

STATE OF ARKANSAS
REGISTERED PROFESSIONAL ENGINEER
No. 9808
JAMES L. BARR
8/22/13

MAINTENANCE OF TRAFFIC DETAILS

r061276.adv warning.dgn 8/19/2013 12:05:59 PM

DATE REVISED	DATE FILMED	DATE REVISED	DATE FILMED

FED.RD. DIST.NO.	STATE	FED.AID PROJ.NO.	SHEET NO.	TOTAL SHEETS
6	ARK.			
JOB NO.		061276	56	438

(2) **MAINTENANCE OF TRAFFIC DETAILS**

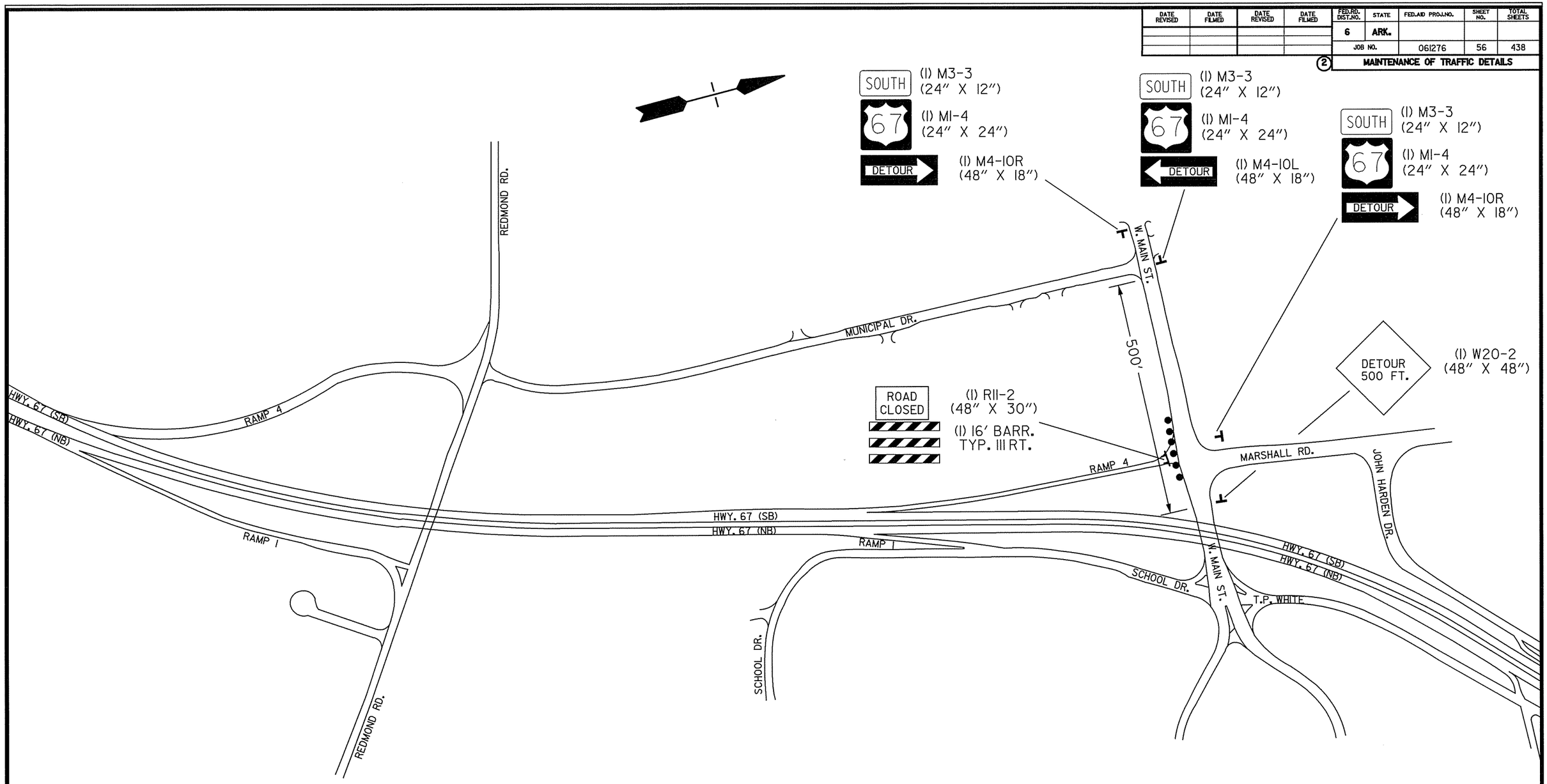

DETOUR FOR TEMPORARY CLOSURE OF SB ENTRANCE RAMP FROM MAIN ST.

STATE OF ARKANSAS
REGISTERED PROFESSIONAL ENGINEER
No. 9808
JAMES L. BARR
8/20/13

MAINTENANCE OF TRAFFIC DETAILS

r061276.MOT_Detour.dgn 8/19/2013 12:06:00 PM

DATE REVISED	DATE FILMED	DATE REVISED	DATE FILMED

FED.RD. DIST.NO.	STATE	FED. AID PROJ. NO.	SHEET NO.	TOTAL SHEETS
6	ARK.			
JOB NO.		061276	57	438

(2) **MAINTENANCE OF TRAFFIC DETAILS**

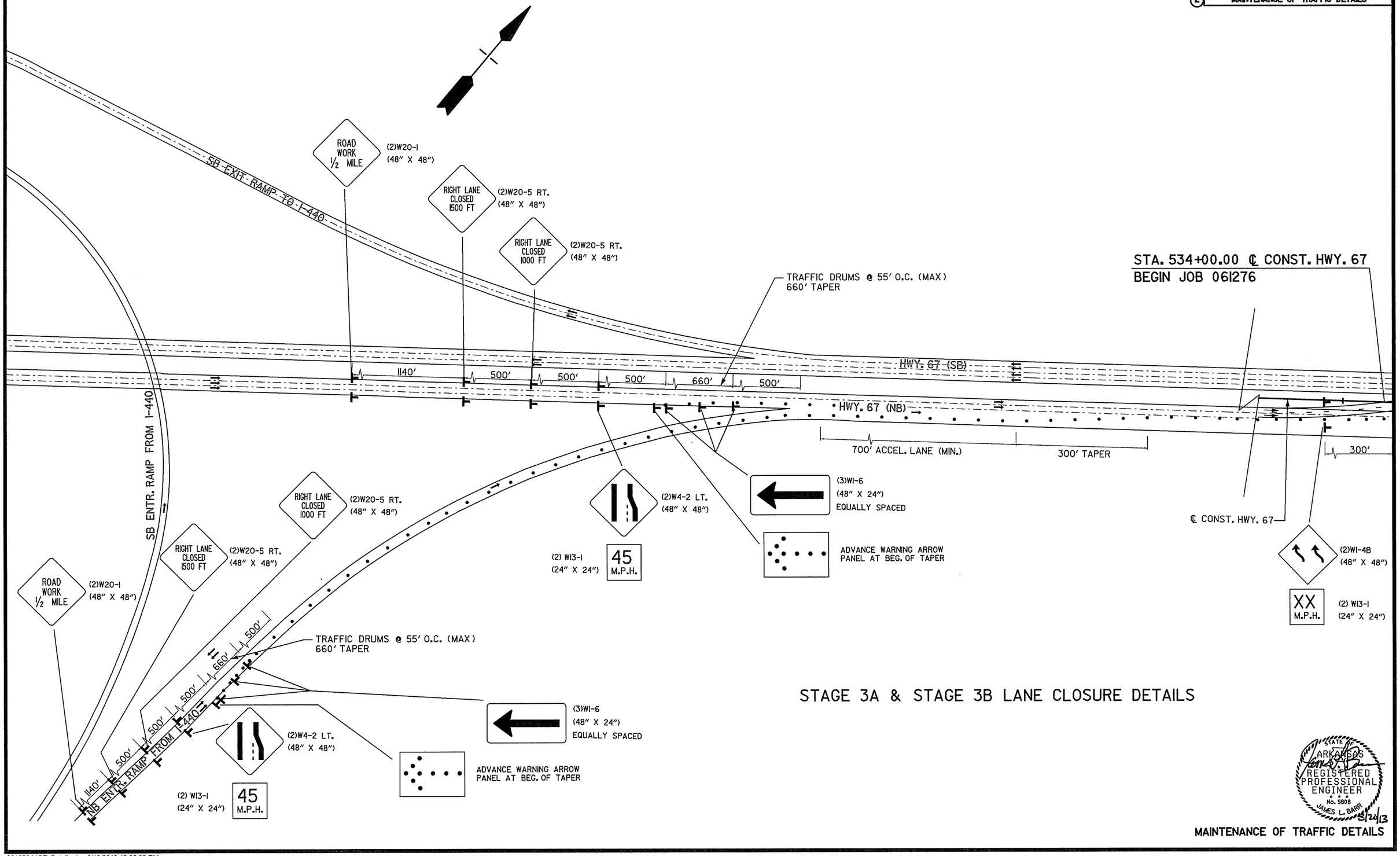

STAGE 3A & STAGE 3B LANE CLOSURE DETAILS

STATE OF ARKANSAS
JAMES L. BARR
REGISTERED PROFESSIONAL ENGINEER
No. 9808
8/20/13

MAINTENANCE OF TRAFFIC DETAILS

r061276.MOT_Details.dgn 8/19/2013 12:06:00 PM

DATE REVISED	DATE FILMED	DATE REVISED	DATE FILMED	FED.RD. DIST.NO.	STATE	FED. AID PROJ. NO.	SHEET NO.	TOTAL SHEETS
				6	ARK.			
				JOB NO.		061276	58	438

(2) **MAINTENANCE OF TRAFFIC DETAILS**

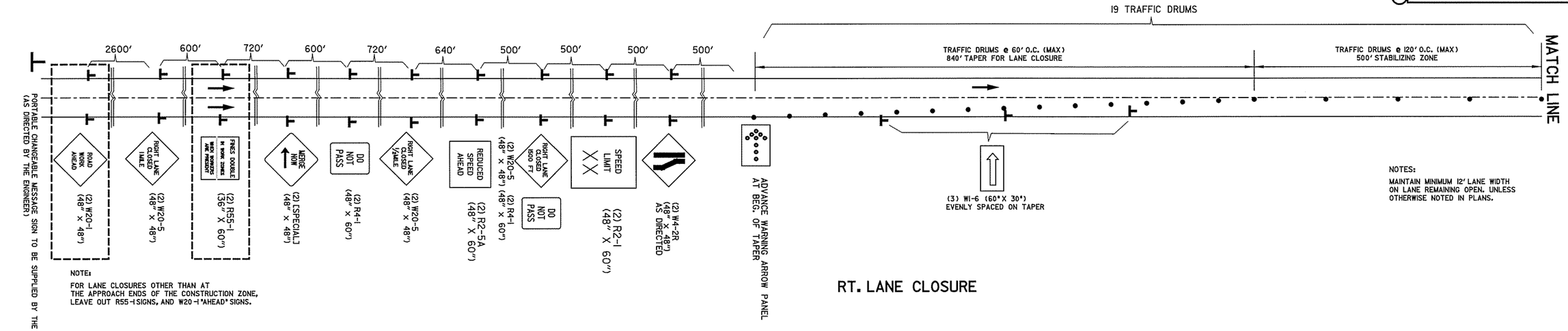

RT. LANE CLOSURE

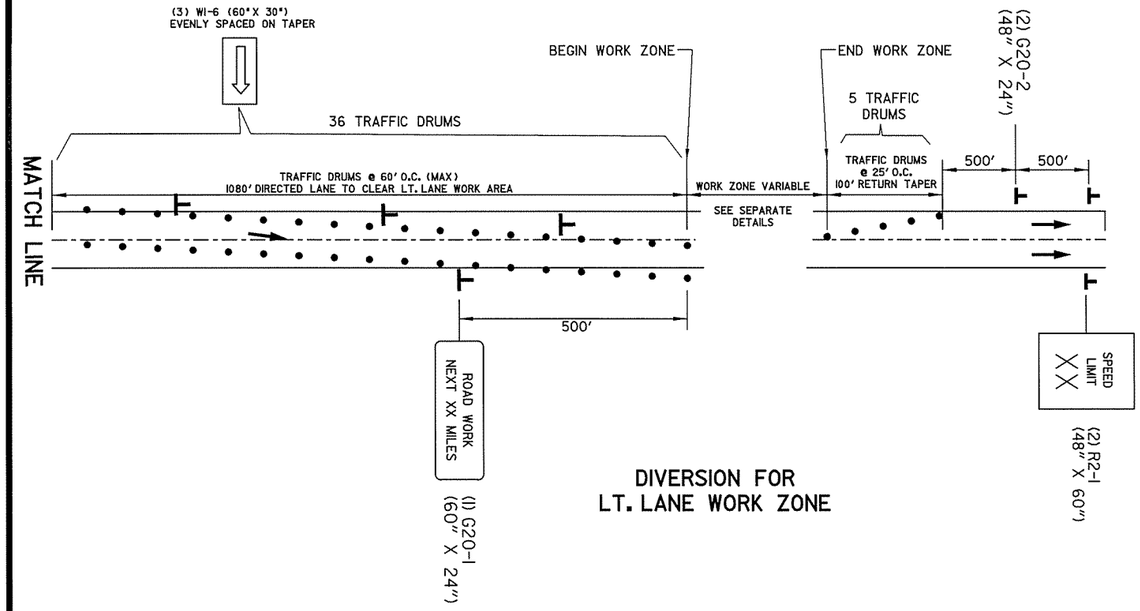

DIVERSION FOR LT. LANE WORK ZONE

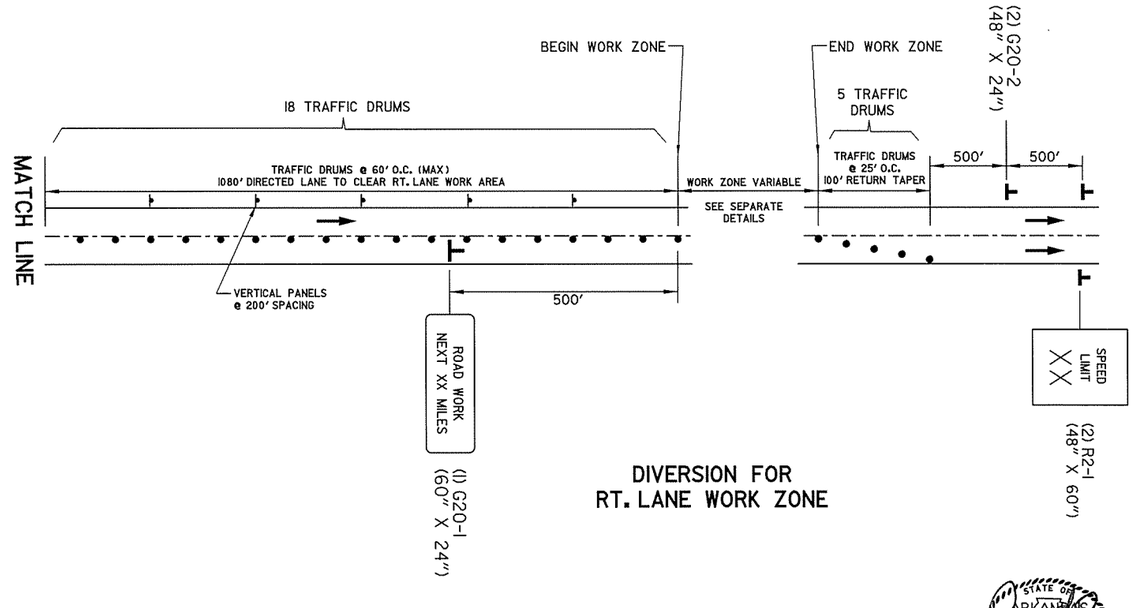

DIVERSION FOR RT. LANE WORK ZONE

STATE OF ARKANSAS
REGISTERED PROFESSIONAL ENGINEER
No. 9808
JAMES L. BARR
8/20/13

ADVANCE SIGNS AND LANE CLOSURES ALL STAGES

DATE REVISED	DATE FILMED	DATE REVISED	DATE FILMED	FED.RD. DIST.NO.	STATE	FED.AID PROJ.NO.	SHEET NO.	TOTAL SHEETS
				6	ARK.			
				JOB NO.		061276	59	438
				(2)	MAINTENANCE OF TRAFFIC DETAILS			

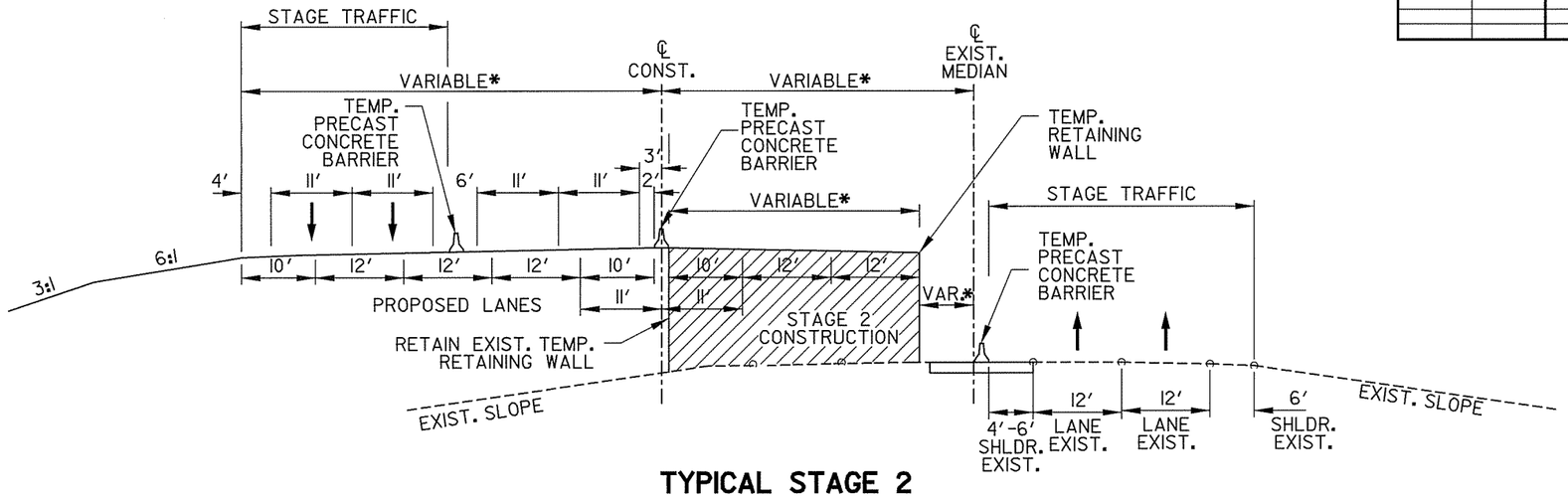

TYPICAL STAGE 2

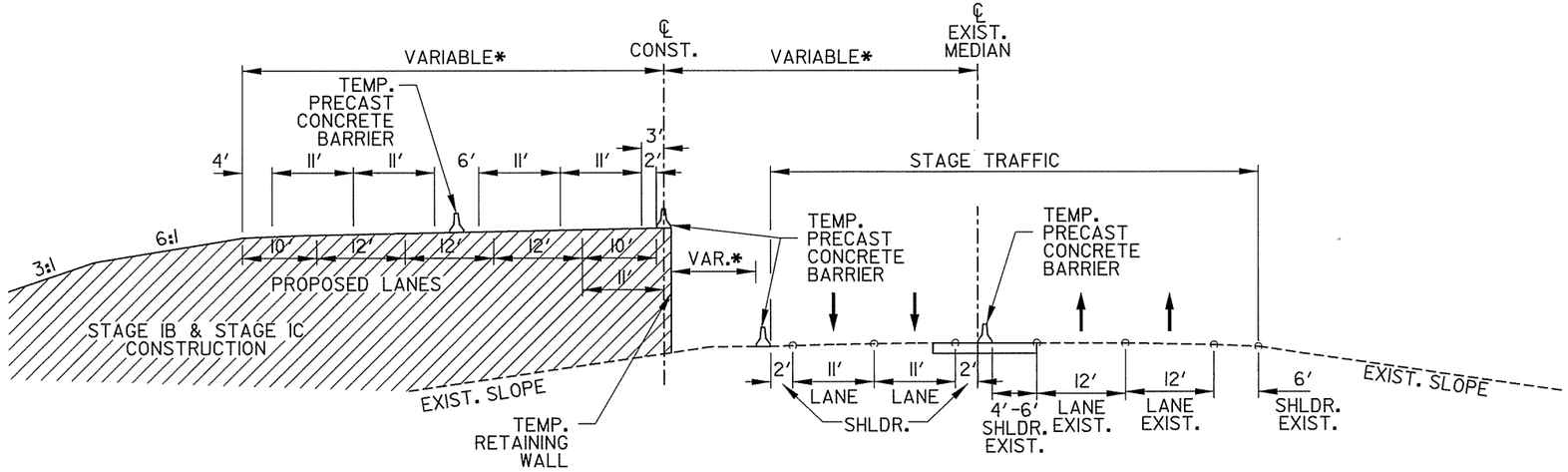

TYPICAL STAGE IB & STAGE IC

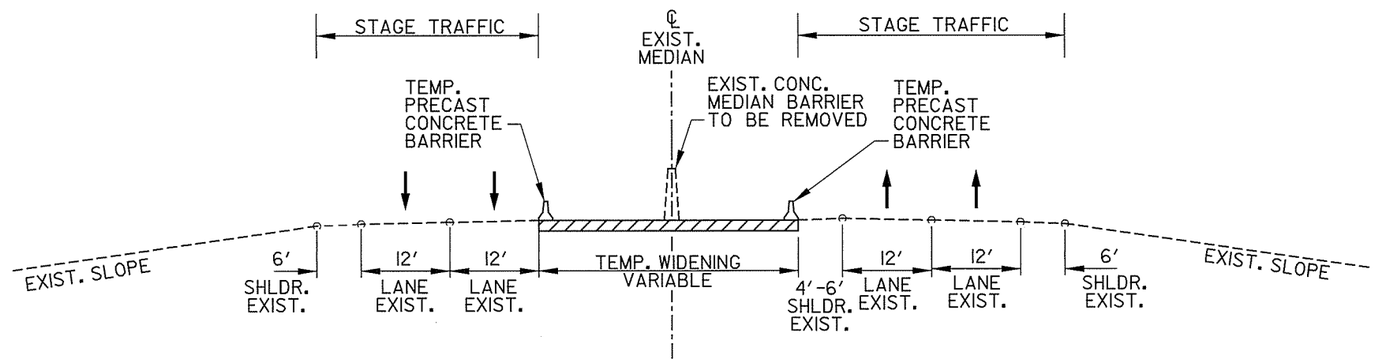

TYPICAL STAGE IA

STAGE CONSTRUCTION

*SEE MAINTENANCE OF TRAFFIC DETAILS FOR ADDITIONAL INFORMATION

STATE OF ARKANSAS
REGISTERED PROFESSIONAL ENGINEER
No. 9808
JAMES L. BARR
8/20/13

C.L. CONST. STA. 532+00.00 TO STA. 586+00.00
MAINTENANCE OF TRAFFIC DETAILS

Stage Construction Typ Sec.dgn 8/19/2013 12:06:01 PM

DATE REVISED	DATE FILMED	DATE REVISED	DATE FILMED	FED.RD. DIST.NO.	STATE	FED.AID PROJ.NO.	SHEET NO.	TOTAL SHEETS
				6	ARK.			
				JOB NO.		061276	60	438

(2) MAINTENANCE OF TRAFFIC DETAILS

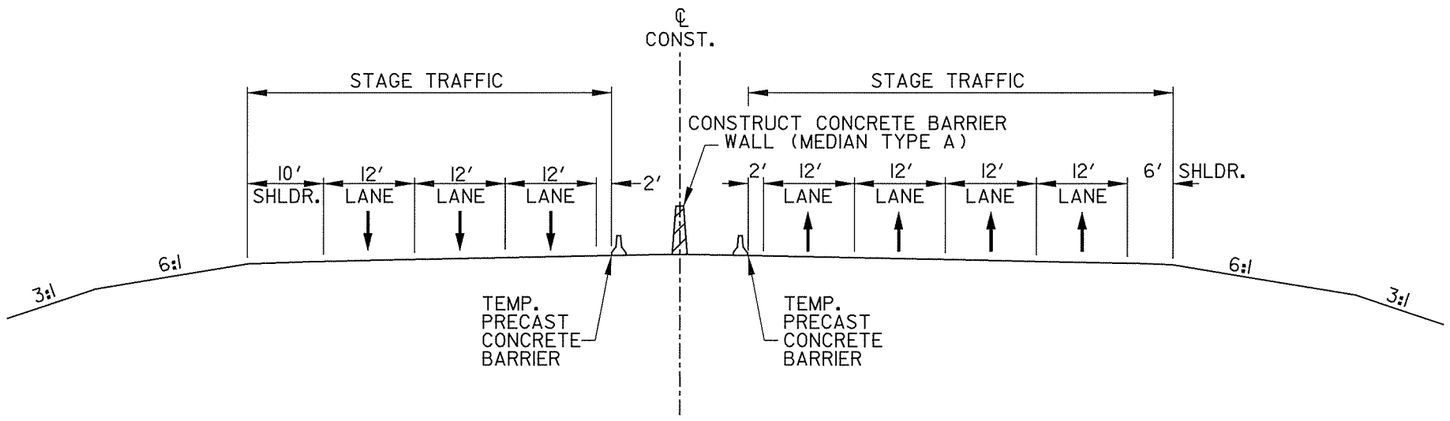

STAGE CONSTRUCTION

TYPICAL STAGE 3C

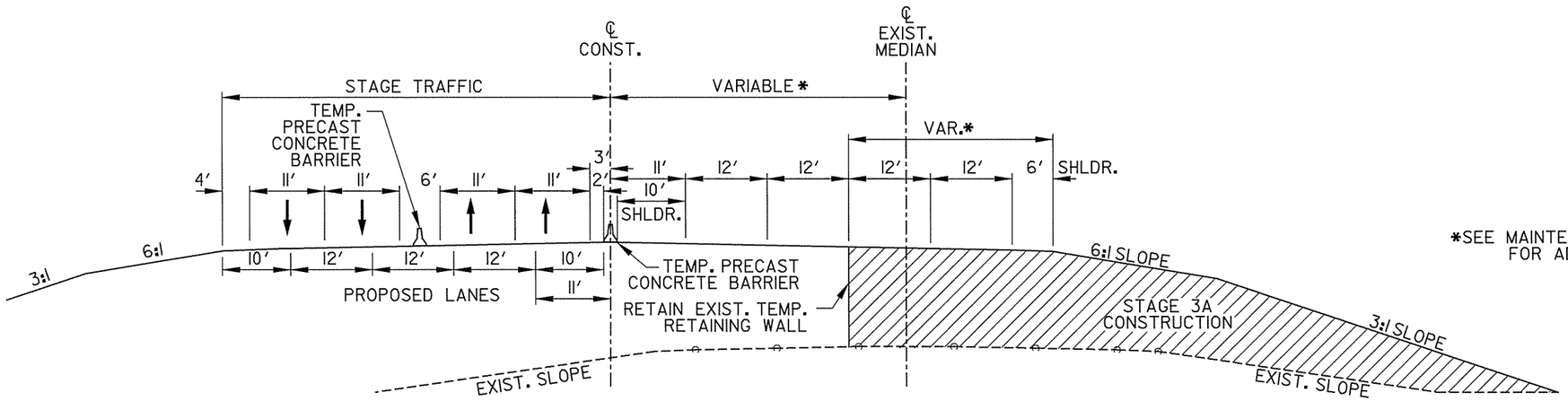

TYPICAL STAGE 3A AND STAGE 3B

*SEE MAINTENANCE OF TRAFFIC DETAILS FOR ADDITIONAL INFORMATION

STATE OF ARKANSAS
REGISTERED PROFESSIONAL ENGINEER
No. 9808
JAMES L. BARR
8/20/13

C.L. CONST. STA. 532+00.00 TO STA. 586+00.00
MAINTENANCE OF TRAFFIC DETAILS

DATE REVISED	DATE FILMED	DATE REVISED	DATE FILMED	FED.RD. DIST.NO.	STATE	FED.AID PROJ.NO.	SHEET NO.	TOTAL SHEETS
				6	ARK.			
				JOB NO.		061276	61	438
				(2)	MAINTENANCE OF TRAFFIC DETAILS			

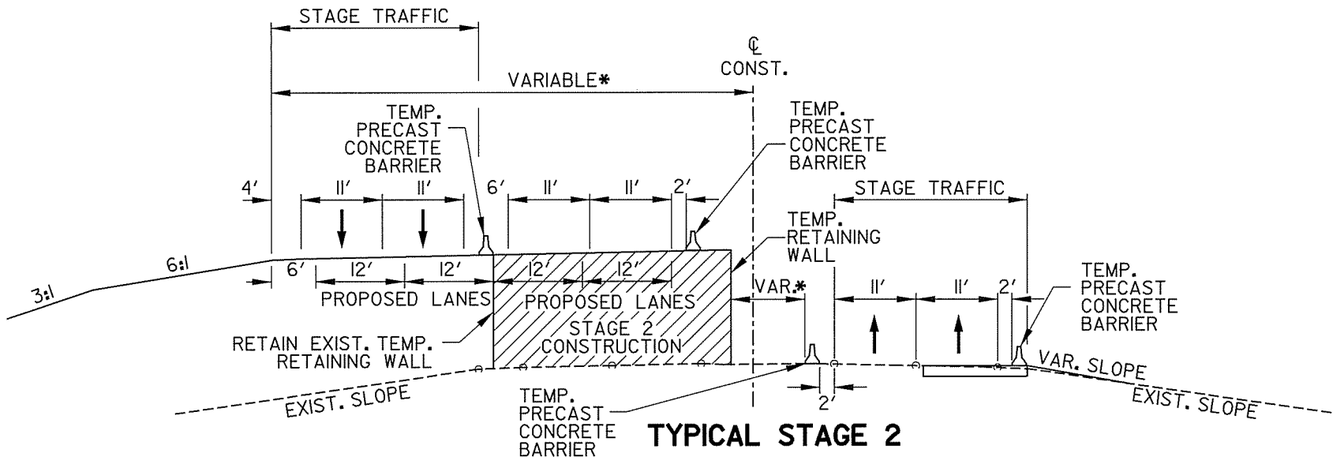

TYPICAL STAGE 2

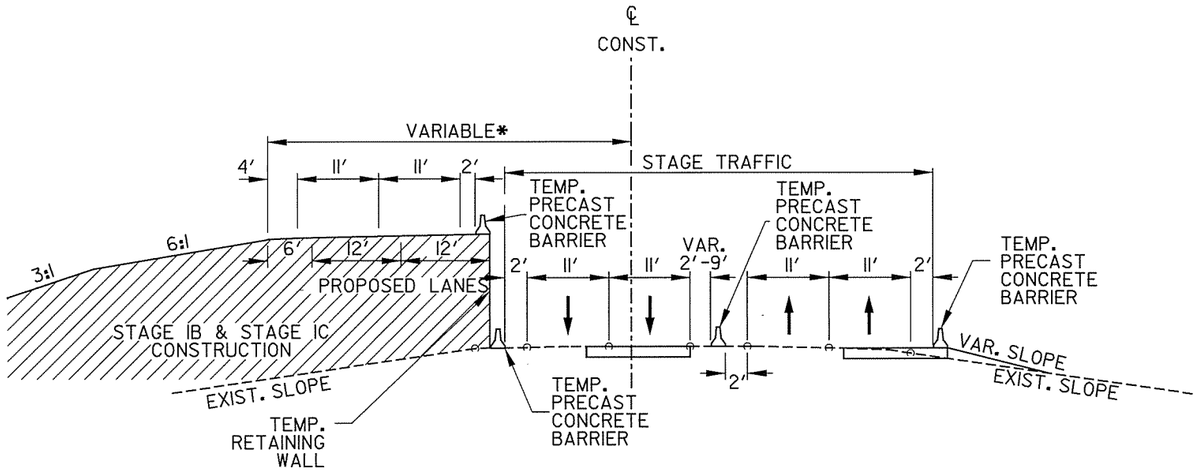

TYPICAL STAGE IB & STAGE IC

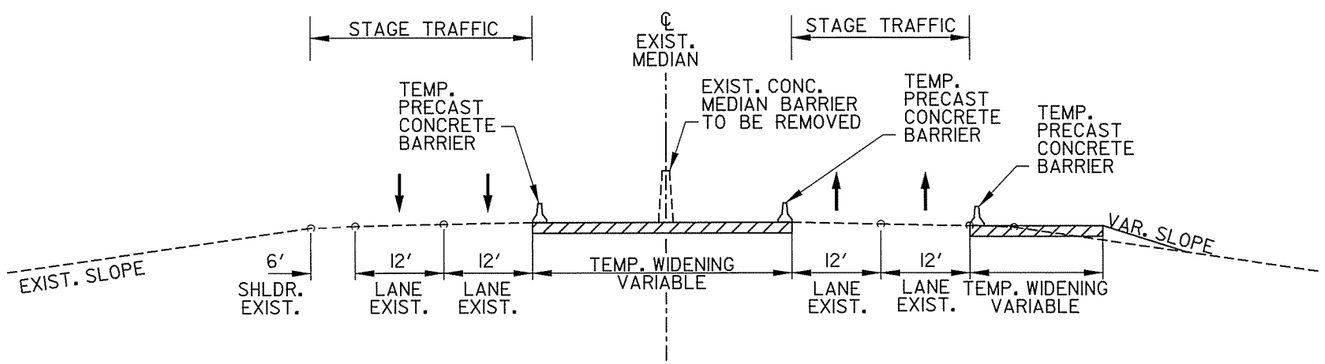

TYPICAL STAGE IA

STAGE CONSTRUCTION

*SEE MAINTENANCE OF TRAFFIC DETAILS FOR ADDITIONAL INFORMATION

STATE OF ARKANSAS
REGISTERED PROFESSIONAL ENGINEER
No. 9808
JAMES L. BARR
8/20/13

C.L. CONST. STA. 586+00.00 TO STA. 606+00.00
MAINTENANCE OF TRAFFIC DETAILS

Stage Construction Typ Sec.dgn 8/19/2013 12:06:01 PM

DATE REVISED	DATE FILMED	DATE REVISED	DATE FILMED	FED.RD. DIST.NO.	STATE	FED.AID PROJ.NO.	SHEET NO.	TOTAL SHEETS
				6	ARK.			
				JOB NO.		061276	62	438

(2) MAINTENANCE OF TRAFFIC DETAILS

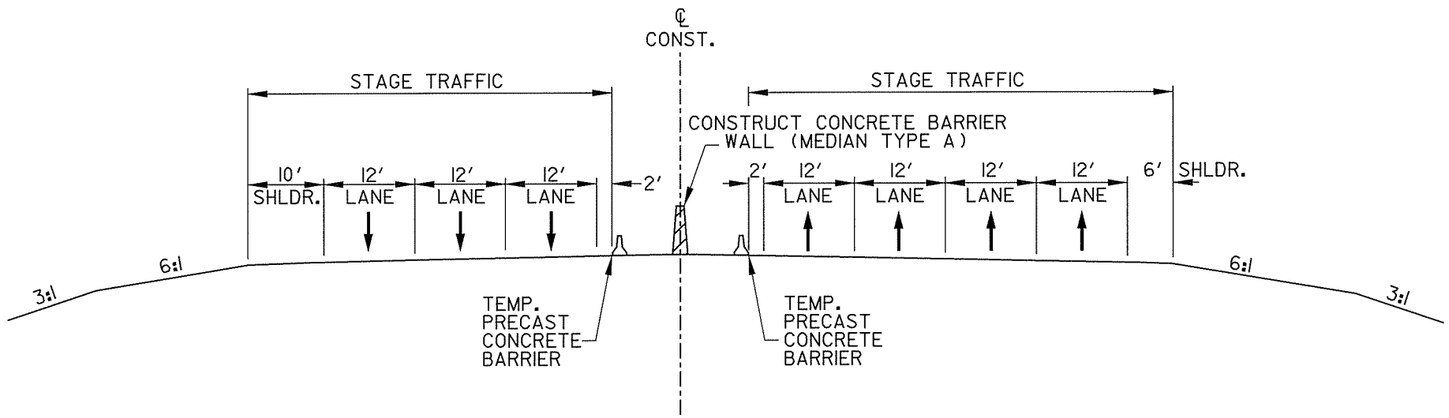

TYPICAL STAGE 3C

STAGE CONSTRUCTION

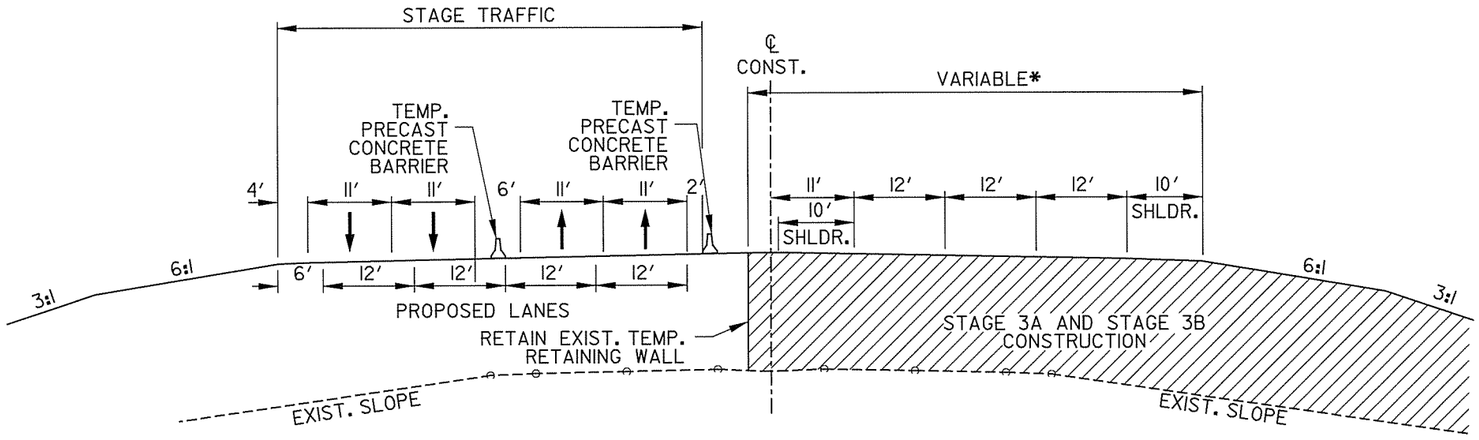

TYPICAL STAGE 3A AND STAGE 3B

* SEE MAINTENANCE OF TRAFFIC DETAILS FOR ADDITIONAL INFORMATION

STATE OF ARKANSAS REGISTERED PROFESSIONAL ENGINEER No. 9808 JAMES L. BARR 2/22/13

C.L. CONST. STA. 586+00.00 TO STA. 606+00.00
MAINTENANCE OF TRAFFIC DETAILS

DATE REVISED	DATE FILMED	DATE REVISED	DATE FILMED	FED.RD. DIST.NO.	STATE	FED.AID PROJ.NO.	SHEET NO.	TOTAL SHEETS
				6	ARK.			
				JOB NO.		061276	63	438

(2) MAINTENANCE OF TRAFFIC DETAILS

STAGE IA CONST.

1. TRAFFIC PATTERN SHALL REMAIN AS EXISTING
2. PLACE PRECAST CONCRETE BARRIER AS SHOWN
3. CONSTRUCT TEMP. WIDENING AS SHOWN
4. CONSTRUCT TEMP. RAMP 4 ENTRANCE RAMP FROM REDMOND RD.
5. CLOSE EXIST. EXIT RAMP FOR JAMES ST. - (PORTABLE CHANGEABLE MESSAGE SIGN AS DIRECTED BY THE ENGINEER.)

STAGE IA - FURNISHING AND INSTALLING PRECAST CONCRETE BARRIER

℄ CONST. HWY. 67 RT. OF L.M.L. STA. 527+00.00 TO STA. 564+10.00 = 3710 LIN. FT.
℄ CONST. HWY. 67 LT. OF R.M.L. STA. 526+00.00 TO STA. 563+50.00 = 3750 LIN. FT.

STA. 534+00.00 ℄ CONST. HWY. 67
BEGIN JOB 061276

LEFT SHOULDER CLOSED 500 FT.
(1) W21-5B (48" X 48")

NEXT 1/4 MILES
(1) W7-3A (30" X 24")

LEFT SHOULDER CLOSED
(1) W21-5A (48" X 48")

525+00

8' SHLDR.
3@12' LANES
10' SHLDR.
10' SHLDR.
4@12' LANES
6' SHLDR.
500' 500'

TEMP. IMPACT ATTENUATION BARRIER STAGE IA

4@12' LANES
6' SHLDR.

530+00

PRECAST CONCRETE BARRIER STAGE IA

FLOOD PLAIN LIMIT

EXIST. ROW & C/A

HWY. 67 (SB)

N 51°51'35" E

4@12' LANES
6' SHLDR.

4@12' LANES
6' SHLDR.

HWY. 67 (NB)

+00 +50

BILLBOARD

535+00

EXIST. ROW & C/A

8' SHLDR.
3@12' LANES
℄ CONST. HWY. 67
6' SHLDR.
4@12' LANES
6' SHLDR.

FLOOD PLAIN LIMIT

540+00

TEMPORARY WIDENING

NOTE:
SEE MAINTENANCE OF TRAFFIC ADVANCE WARNING SIGNS, TYPICALS SECTIONS AND TEMP. RAMP PLAN & PROFILE SHEETS FOR ADDITIONAL INFORMATION.

STATE OF ARKANSAS
REGISTERED PROFESSIONAL ENGINEER
No. 14517
PAUL ROBBINS

STAGE IA 8-26-13
MAINTENANCE OF TRAFFIC DETAILS

r061276.MOT_STAGE 1A.dgn 8/26/2013 10:05:53 AM

DATE REVISED	DATE FILMED	DATE REVISED	DATE FILMED	FED.RD. DIST.NO.	STATE	FED.AID PROJ.NO.	SHEET NO.	TOTAL SHEETS
				6	ARK.			
				JOB NO.		061276	64	438
				(2)	MAINTENANCE OF TRAFFIC DETAILS			

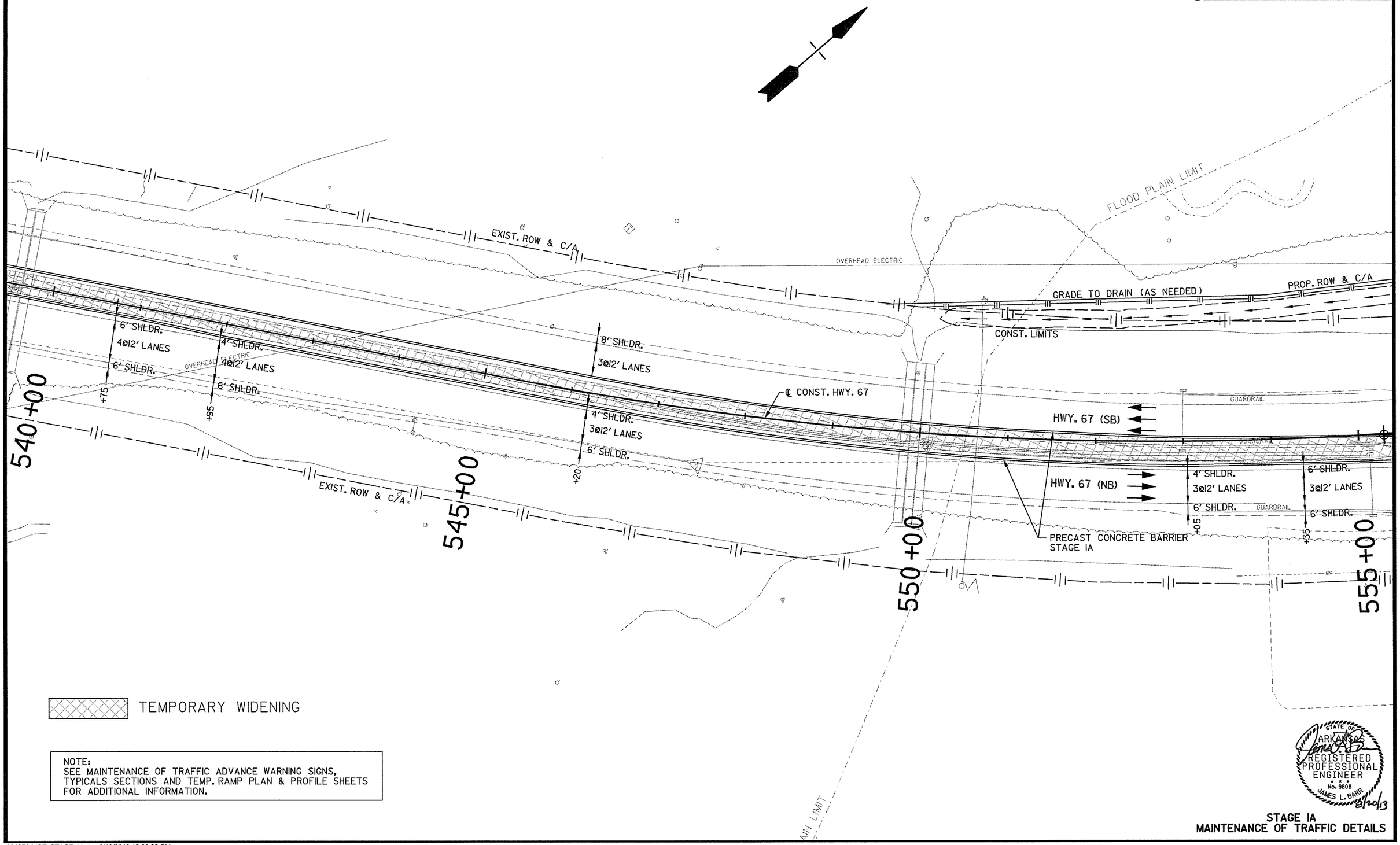

NOTE:
SEE MAINTENANCE OF TRAFFIC ADVANCE WARNING SIGNS, TYPICALS SECTIONS AND TEMP. RAMP PLAN & PROFILE SHEETS FOR ADDITIONAL INFORMATION.

STATE OF ARKANSAS
REGISTERED PROFESSIONAL ENGINEER
No. 9808
JAMES L. BARR
8/20/13

STAGE IA
MAINTENANCE OF TRAFFIC DETAILS

r061276.MOT_STAGE 1A.dgn 8/19/2013 12:06:03 PM

DATE REVISED	DATE FILMED	DATE REVISED	DATE FILMED	FED.RD. DIST.NO.	STATE	FED.AID PROJ.NO.	SHEET NO.	TOTAL SHEETS
				6	ARK.			
				JOB NO.		061276	65	438

(2) MAINTENANCE OF TRAFFIC DETAILS

(1) RII-2 (48" X 30")
(1) 16' BARR. TYP. III LT.

ROAD CLOSED

ROAD CLOSED

(1) RII-2 (48" X 30")
(1) 16' BARR. TYP. III RT.

STAGE IA - FURNISHING AND INSTALLING PRECAST CONCRETE BARRIER

℄ TEMP. RAMP 4 CONNECTION LT. STA. 13+90.00 TO STA. 16+32.44 = 242 LIN. FT.
℄ TEMP. RAMP 4 CONNECTION RT. STA. 11+60.00 TO STA. 16+13.86 = 454 LIN. FT.
℄ CONST. HWY. 67 LT. OF L.M.L. STA. 556+90.00 TO STA. 560+69.91 = 380 LIN. FT.

MIT

PROP. ROW & C/A

GRADE TO DRAIN (AS NEEDED)

CONST. LIMITS

OVERHEAD ELECTRIC

PCC 11+07.13

PRECAST CONCRETE BARRIER STAGE IA

560+00

PT 17+18.68

TEMP. RAMP 4 CONNECTION

PI 21+16.61

PROP. ROW & C/A

CONST. LIMITS

35+00

N 34°30'00" E

N 18°55'07" W

CONST. LIMITS

14' SHLDR.
15' RAMP
4' SHLDR.

20+00

PC 18+85.98

TRAFFIC DRUMS @ 20' SPACING
12 TOTAL - STAGE IA

MUNICIPAL DR.

WATER

REDMOND ROAD

WATER LINE

RAILROAD

PAVED P

PROPOSED ROW & C/A

15+00

CONST. LIMITS

PRECAST CONCRETE BARRIER STAGE IA

N 18°55'07" W

N 18°32'

OVERHEAD ELECTRIC

EXIST. ROW & C/A

OVERHEAD

EXIST. ENT. RAMP FROM REDMOND RD.

N 38°19'26" E

N 35°05'07" E

PI 14+56.23

555+00

40+00

℄ CONST. HWY. 67

6' SHLDR.
2@12' LANES
6' SHLDR.

HWY. 67 (SB)

HWY. 67 (NB)

PRECAST CONCRETE BARRIER STAGE IA

BILLBOARD

EXIST. ROW & C/A

SANITARY SEWER

EXIST. EXIT RAMP TO REDMOND RD.

PROP. ROW & C/A

565+00

WATER LINE

570+00

PROP. ROW

STAGE CONST.

TEMPORARY WIDENING

NOTE:
SEE MAINTENANCE OF TRAFFIC ADVANCE WARNING SIGNS, TYPICALS SECTIONS AND TEMP. RAMP PLAN & PROFILE SHEETS FOR ADDITIONAL INFORMATION.

STATE OF ARKANSAS
REGISTERED PROFESSIONAL ENGINEER
No. 9808
JAMES L. BARR
8/20/13

STAGE IA
MAINTENANCE OF TRAFFIC DETAILS

r061276.MOT STAGE 1A.dgn 8/19/2013 12:06:03 PM

DATE REVISED	DATE FILMED	DATE REVISED	DATE FILMED	FED.RD. DIST.NO.	STATE	FED.AID PROJ.NO.	SHEET NO.	TOTAL SHEETS
				6	ARK.			
				JOB NO.		061276	66	438

(2) MAINTENANCE OF TRAFFIC DETAILS

STAGE IA - FURNISHING AND INSTALLING PRECAST CONCRETE BARRIER

℄ CONST. HWY. 67 RT. OF L.M.L. STA. 590+70.00 TO STA. 606+00.00 = 1530 LIN. FT.
℄ CONST. HWY. 67 LT. OF R.M.L. STA. 590+75.00 TO STA. 606+00.00 = 1525 LIN. FT.
℄ CONST. HWY. 67 RT. OF R.M.L. STA. 590+85.00 TO STA. 606+00.00 = 1515 LIN. FT.

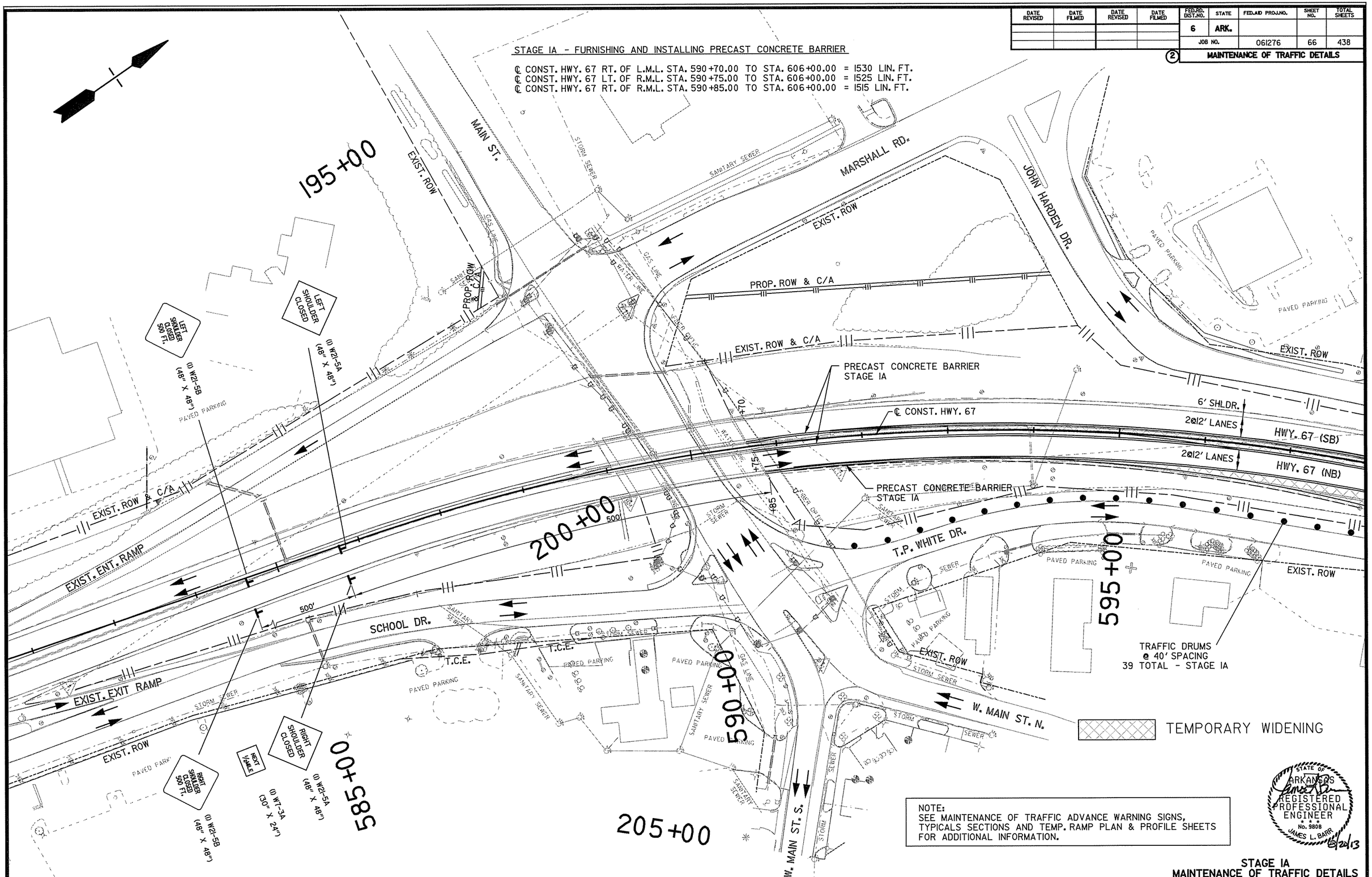

NOTE:
SEE MAINTENANCE OF TRAFFIC ADVANCE WARNING SIGNS, TYPICALS SECTIONS AND TEMP. RAMP PLAN & PROFILE SHEETS FOR ADDITIONAL INFORMATION.

STATE OF ARKANSAS
REGISTERED PROFESSIONAL ENGINEER
No. 9808
JAMES L. BARR
8/20/13

STAGE IA
MAINTENANCE OF TRAFFIC DETAILS

r061276 MOT STAGE 1A.dgn 8/19/2013 12:06:04 PM

DATE REVISED	DATE FILMED	DATE REVISED	DATE FILMED	FED.RD. DIST.NO.	STATE	FED.AID PROJ.NO.	SHEET NO.	TOTAL SHEETS
				6	ARK.			
				JOB NO.		061276	67	438

(2) MAINTENANCE OF TRAFFIC DETAILS

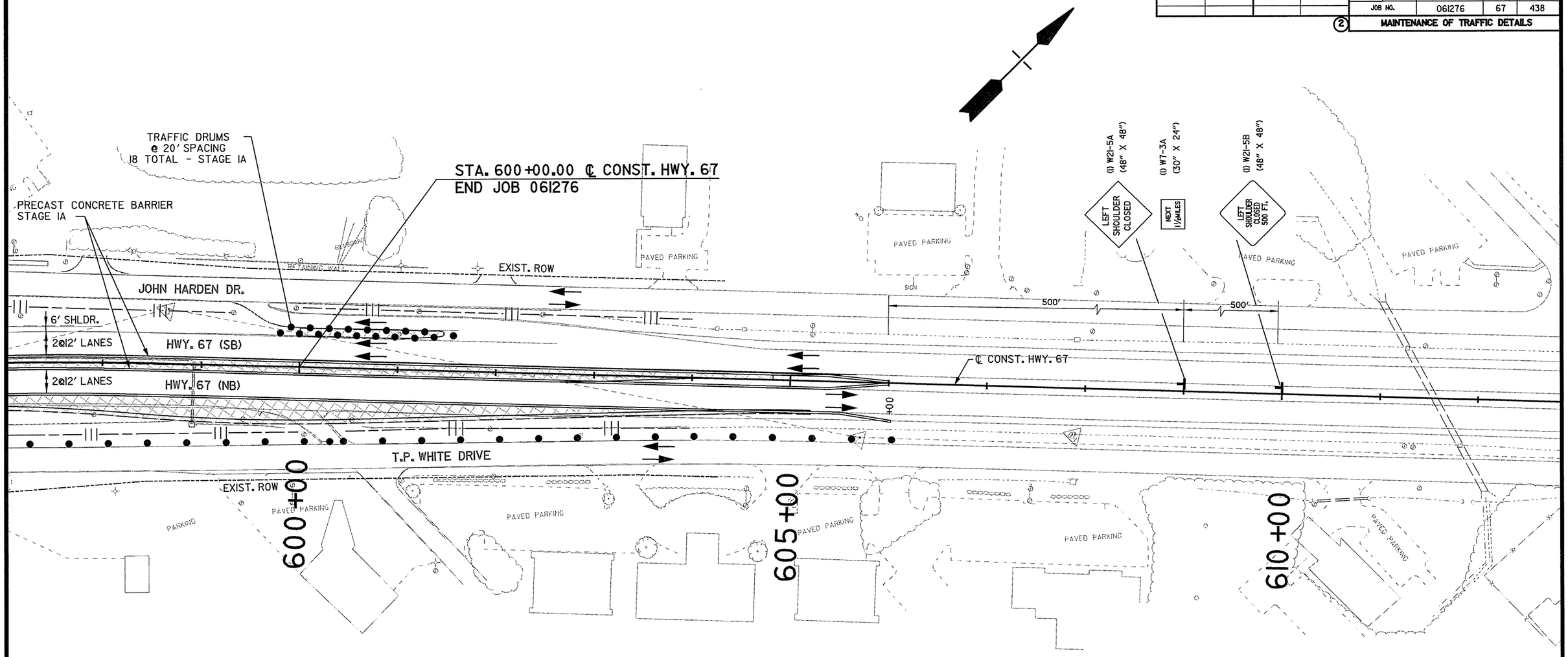

TEMPORARY WIDENING

NOTE:
SEE MAINTENANCE OF TRAFFIC ADVANCE WARNING SIGNS, TYPICALS SECTIONS AND TEMP. RAMP PLAN & PROFILE SHEETS FOR ADDITIONAL INFORMATION.

STATE OF ARKANSAS
REGISTERED PROFESSIONAL ENGINEER
No. 9808
JAMES L. BARR
8/20/13

STAGE IA
MAINTENANCE OF TRAFFIC DETAILS

r061276.MOT_STAGE 1A.dgn 8/19/2013 12:06:04 PM

DATE REVISED	DATE FILMED	DATE REVISED	DATE FILMED	FED.RD. DIST.NO.	STATE	FED.AID PROJ.NO.	SHEET NO.	TOTAL SHEETS
				6	ARK.			
				JOB NO.		061276	68	438

(2) MAINTENANCE OF TRAFFIC DETAILS

STAGE IB CONST.

1. HWY. 67 SB TRAFFIC TRAVELING ON TEMP. WIDENING CONSTRUCTED IN STAGE IA.
2. HWY. 67 NB TRAFFIC TRAVELING IN EXIST. LANES & TEMP. LANES CONSTRUCTED IN STAGE IA.
3. TRAFFIC FROM REDMOND ROAD WANTING TO TRAVEL SOUTH ON HWY. 67 WILL UTILIZE PORTION OF NEW AND TEMPORARY ENTRANCE RAMP FROM REDMOND ROAD.
4. PLACE PRECAST BARRIER WALL AND CONSTRUCT SHADED AREAS AS SHOWN IN PLANS.

STAGE IB - RELOCATING PRECAST CONCRETE BARRIER

℄ CONST. HWY. 67 RT. OF L.M.L. STA. 532+40.00 TO TEMP. RAMP 4 CONNECTION LT. STA. 20+40.00 = 3380 LIN. FT.
℄ CONST. HWY. 67 LT. OF R.M.L. STA. 527+00.00 TO STA. 534+50.00 = 750 LIN. FT.

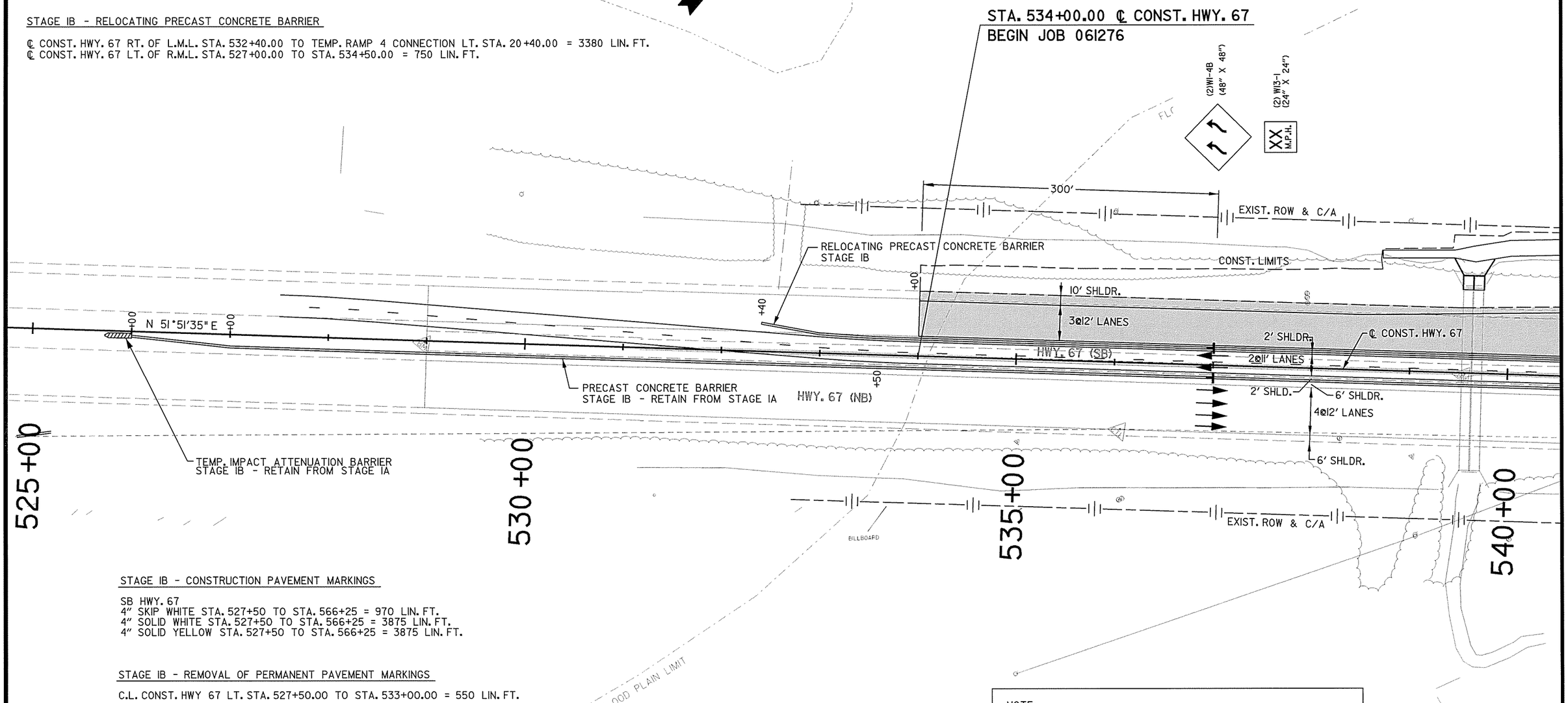

STAGE IB - CONSTRUCTION PAVEMENT MARKINGS

SB HWY. 67
4" SKIP WHITE STA. 527+50 TO STA. 566+25 = 970 LIN. FT.
4" SOLID WHITE STA. 527+50 TO STA. 566+25 = 3875 LIN. FT.
4" SOLID YELLOW STA. 527+50 TO STA. 566+25 = 3875 LIN. FT.

STAGE IB - REMOVAL OF PERMANENT PAVEMENT MARKINGS

C.L. CONST. HWY 67 LT. STA. 527+50.00 TO STA. 533+00.00 = 550 LIN. FT.

NOTE:
LANE SHIFT ALIGNMENTS BASED ON 3 DEGREE CURVES UNLESS OTHERWISE NOTED ON THE PLANS.

STAGE CONST.

NOTE:
SEE MAINTENANCE OF TRAFFIC ADVANCE WARNING SIGNS, TYPICALS SECTIONS AND TEMP. RAMP PLAN & PROFILE SHEETS FOR ADDITIONAL INFORMATION.

STATE OF ARKANSAS
REGISTERED PROFESSIONAL ENGINEER
No. 9808
JAMES L. BARR
8/22/13

STAGE IB
MAINTENANCE OF TRAFFIC DETAILS

r061276.MOT_STAGE 1B.dgn 8/20/2013 9:14:34 AM

DATE REVISED	DATE FILMED	DATE REVISED	DATE FILMED	FED.RD. DIST.NO.	STATE	FED.AID PROJ.NO.	SHEET NO.	TOTAL SHEETS
				6	ARK.			
				JOB NO.		061276	69	438

(2) MAINTENANCE OF TRAFFIC DETAILS

STAGE IB - REMOVAL OF PERMANENT PAVEMENT MARKINGS

SB HWY. 67
C.L. CONST. HWY 67 RT. STA. 548+50.00 TO STA. 562+50.00 = 1400 LIN. FT.

STAGE IB - CONSTRUCTION PAVEMENT MARKINGS

SB HWY. 67
4" SKIP WHITE (ACCEL. LANE) STA. 553+65 TO STA. 557+25 = 90 LIN. FT.

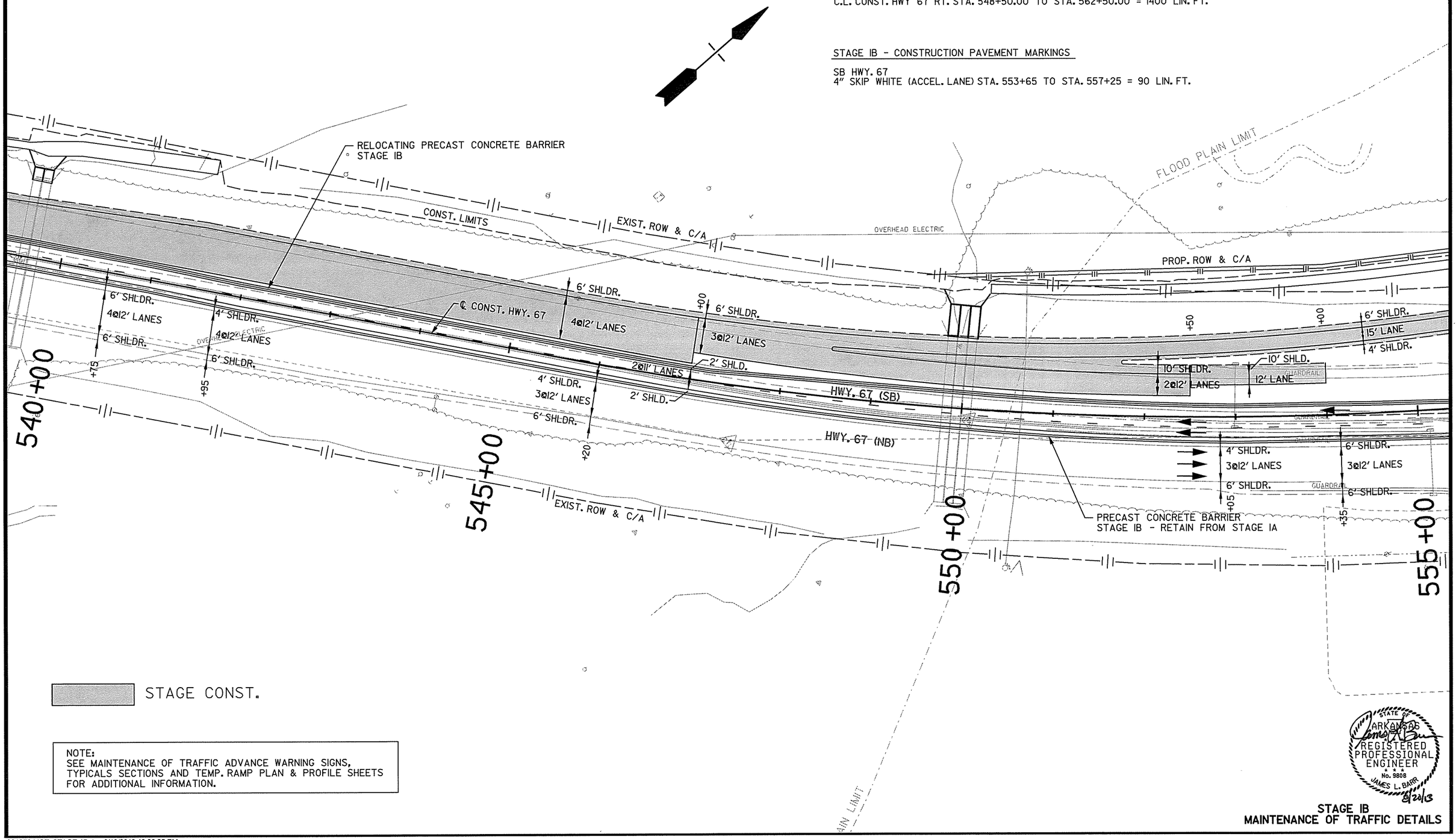

STAGE CONST.

NOTE:
SEE MAINTENANCE OF TRAFFIC ADVANCE WARNING SIGNS, TYPICALS SECTIONS AND TEMP. RAMP PLAN & PROFILE SHEETS FOR ADDITIONAL INFORMATION.

STATE OF ARKANSAS
JAMES L. BARR
REGISTERED PROFESSIONAL ENGINEER
No. 9808
JAMES L. BARR
8/20/13

STAGE IB
MAINTENANCE OF TRAFFIC DETAILS

r061276 MOT_STAGE 1B.dgn 8/19/2013 12:06:05 PM

DATE REVISED	DATE FILMED	DATE REVISED	DATE FILMED

FED.RD. DIST.NO.	STATE	FED.AID PROJ.NO.	SHEET NO.	TOTAL SHEETS
6	ARK.			
JOB NO.		061276	70	438

(2) MAINTENANCE OF TRAFFIC DETAILS

STAGE IB - FURNISHING AND INSTALLING PRECAST CONCRETE BARRIER

℄ CONST. HWY. 67 LT. OF L.M.L. STA. 559+90.00 TO ℄ CONST. HWY. 67 LT. OF L.M.L. STA. 566+25.00 = 635 LIN. FT.
℄ CONST. HWY. 67 LT. OF L.M.L. STA. 569+65.00 TO ℄ CONST. HWY. 67 LT. OF L.M.L. STA. 582+00.00 = 1235 LIN. FT.

STAGE IB - REMOVABLE CONSTRUCTION PAVEMENT MARKINGS

TEMP. RAMP 4 CONNECTION
4" SOLID WHITE STA. 19+74 TO STA. 23+13 = 431 LIN. FT.
4" SOLID YELLOW STA. 19+74 TO STA. 23+13 = 356 LIN. FT.

STAGE IB - CONSTRUCTION PAVEMENT MARKINGS

TEMP. RAMP 4 CONNECTION
4" SOLID WHITE STA. 11+80 TO STA. 19+74 = 794 LIN. FT.
4" SOLID YELLOW STA. 11+80 TO STA. 19+74 = 794 LIN. FT.

REDMOND ROAD
4" SKIP WHITE STA. 32+59.49 TO STA. 46+28.36 = 342 LIN. FT.

STA. 558+59.38 ℄ CONST. HWY. 67 CONST.
24" X 92' R.C. PIPE CULVERT ON LT.

555+00
560+00
565+00
570+00
35+00
40+00

RELOCATING PRECAST CONCRETE BARRIER STAGE IB
24" X 92' R.C.P. CULVERT
PROP. ROW & C/A
CONST. LIMITS
OVERHEAD ELECTRIC
RAMP 4
6' SHLDR.
15' LANE
4' SHLDR.
TEMP. RAMP 4 CONN.
TRAFFIC DRUMS @ 40' SPACING 25 TOTAL - STAGE IB
TRAFFIC DRUMS @ 40' SPACING 42 TOTAL - STAGE IB
PRECAST CONCRETE BARRIER STAGE IB
HWY. 67 (SB)
HWY. 67 (NB)
EXIST. ROW & C/A
℄ CONST. HWY. 67
10' SHLDR. 2@12' LANES
2' SHLD. 2@11' LANES 2' SHLD.
6' SHLD. 2@12' LANES 6' SHLD.
10' SHLDR. 3@12' LANES
PRECAST CONCRETE BARRIER STAGE IB-RETAIN FROM STAGE IA
EXIST. EXIT RAMP TO REDMOND RD.
SANITARY SEWER
BILLBOARD
CONC
EXIST. ROW
REDMOND ROAD
PROP. ROW
RAILROAD
WATER LINE
GAS
PARKING
MUNICIPAL DR.
PAVED PARKING
VERTICAL PANELS @ 40' SPACING 18 TOTAL - STAGE IB

STAGE CONST.

NOTE:
SEE MAINTENANCE OF TRAFFIC ADVANCE WARNING SIGNS, TYPICALS SECTIONS AND TEMP. RAMP PLAN & PROFILE SHEETS FOR ADDITIONAL INFORMATION.

STATE OF ARKANSAS
REGISTERED PROFESSIONAL ENGINEER
No. 9808
JAMES L. BARR
8/20/13

STAGE IB
MAINTENANCE OF TRAFFIC DETAILS

r061276.MOT_STAGE 1B.dgn 8/19/2013 12:06:05 PM

DATE REVISED	DATE FILMED	DATE REVISED	DATE FILMED	FED.RD. DIST.NO.	STATE	FED.AID PROJ.NO.	SHEET NO.	TOTAL SHEETS
				6	ARK.			
				JOB NO.		061276	71	438

(2) MAINTENANCE OF TRAFFIC DETAILS

STAGE IB - FURNISHING AND INSTALLING PRECAST CONCRETE BARRIER

℄ CONST. HWY. 67 LT. OF L.M.L. STA. 581+90.00 TO ℄ RAMP 4 MAIN ST. RT. STA. 588+35.00 = 645 LIN. FT.
℄ CONST. HWY. 67 LT. OF L.M.L. STA. 581+90.00 TO ℄ CONST. HWY. 67 LT. OF L.M.L. STA. 600+75.00 = 1885 LIN. FT.

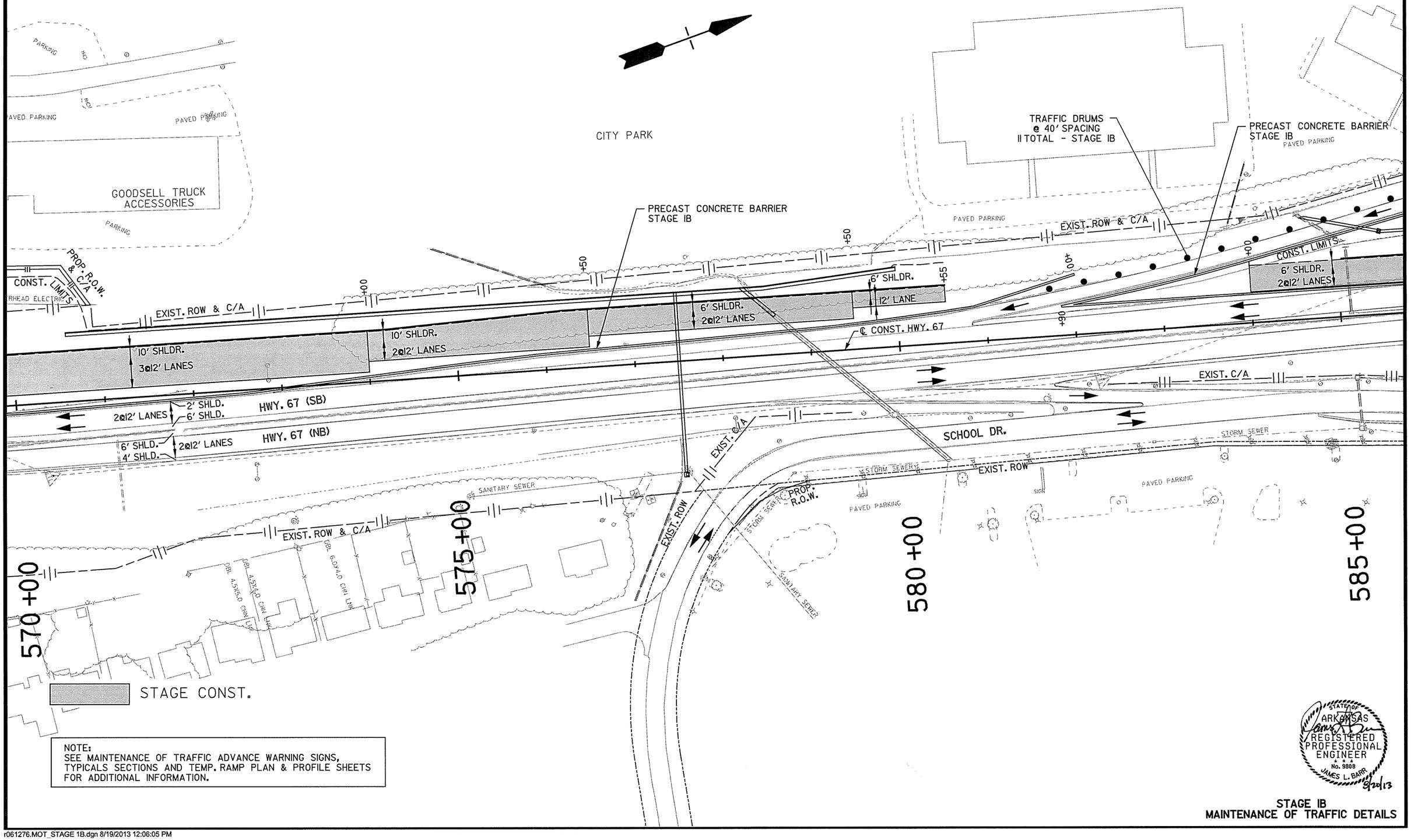

STAGE CONST.

NOTE:
SEE MAINTENANCE OF TRAFFIC ADVANCE WARNING SIGNS, TYPICALS SECTIONS AND TEMP. RAMP PLAN & PROFILE SHEETS FOR ADDITIONAL INFORMATION.

STATE OF ARKANSAS
REGISTERED PROFESSIONAL ENGINEER
No. 9808
JAMES L. BARR
8/20/13

STAGE IB
MAINTENANCE OF TRAFFIC DETAILS

r061276.MOT_STAGE 1B.dgn 8/19/2013 12:06:05 PM

DATE REVISED	DATE FILMED	DATE REVISED	DATE FILMED

FED.RD. DIST.NO.	STATE	FED.AID PROJ.NO.	SHEET NO.	TOTAL SHEETS
6	ARK.			
JOB NO.		061276	72	438

(2) **MAINTENANCE OF TRAFFIC DETAILS**

STAGE IB - CONSTRUCTION PAVEMENT MARKINGS

NB HWY. 67
4" SKIP WHITE STA. 591+10 TO STA. 600+00 = 220 LIN. FT.
4" SOLID WHITE STA. 591+10 TO STA. 600+00 = 890 LIN. FT.
4" SOLID YELLOW STA. 591+10 TO STA. 600+00 = 890 LIN. FT.

SB HWY. 67
4" SKIP WHITE 590+70 TO STA. 600+00 = 230 LIN. FT.
4" SOLID WHITE STA. 590+70 TO STA. 600+00 = 930 LIN. FT.
4" SOLID YELLOW STA. 590+70 TO STA. 600+00 = 930 LIN. FT.

STAGE IB - REMOVAL OF PERMANENT PAVEMENT MARKINGS

SB HWY. 67
C.L. CONST. HWY 67 LT. STA. 592+00.00 TO STA. 605+00.00 = 1300 LIN. FT.

NB HWY. 67
C.L. CONST. HWY 67 RT. STA. 592+00.00 TO STA. 605+00.00 = 1300 LIN. FT.

STAGE IB - RELOCATING PRECAST CONCRETE BARRIER

℄ CONST. HWY. 67 RT. OF R.M.L. STA. 590+85.00 TO ℄ CONST. HWY. 67 RT. OF R.M.L. STA. 606+00.00 = 1515 LIN. FT.
℄ CONST. HWY. 67 LT. OF R.M.L. STA. 592+00.00 TO ℄ CONST. HWY. 67 LT. OF R.M.L. STA. 606+00.00 = 1400 LIN. FT.

EXIST. ROW
MAIN ST.
MARSHALL RD.
JOHN HARDEN DR.
PROPOSED R.O.W. & C/A
CONST. LIMITS
EXIST. ROW & C/A
PRECAST CONCRETE BARRIER STAGE IB
ENTRANCE RAMP FROM MAIN ST.
2@11' LANES
2' SHLD.
10' SHLDR.
2@12' LANES
6' SHLDR.
HWY. 67 (SB)
HWY. 67 (NB)
℄ CONST. HWY. 67
300'
RELOCATING PRECAST CONCRETE BARRIER STAGE IB
T.P. WHITE DR.
EXIST. C/A
EXIST. MAIN ST. EXIT RAMP
SCHOOL DR.
T.C.E.
PAVED PARKING
STORM SEWER
SANITARY SEWER
GAS LINE
WATER LINE
595+00
590+00
585+00
TRAFFIC DRUMS @ 40' SPACING
39 TOTAL - STAGE IB
W. MAIN ST. N.
W. MAIN ST. S.
XX M.P.H.
(2) W13-1 (24" X 24")
(2) W1-4B (48" X 48")

STAGE CONST.

NOTE:
LANE SHIFT ALIGNMENTS BASED ON 3 DEGREE CURVES UNLESS OTHERWISE NOTED ON THE PLANS.

NOTE:
SEE MAINTENANCE OF TRAFFIC ADVANCE WARNING SIGNS, TYPICALS SECTIONS AND TEMP. RAMP PLAN & PROFILE SHEETS FOR ADDITIONAL INFORMATION.

STATE OF ARKANSAS
REGISTERED PROFESSIONAL ENGINEER
No. 9808
JAMES L. BARR
8/20/13

STAGE IB
MAINTENANCE OF TRAFFIC DETAILS

r061276.MOT STAGE 1B.dgn 8/19/2013 12:06:06 PM

DATE REVISED	DATE FILMED	DATE REVISED	DATE FILMED	FED.RD. DIST.NO.	STATE	FED.AID PROJ.NO.	SHEET NO.	TOTAL SHEETS
				6	ARK.			
				JOB NO.		061276	73	438

(2) MAINTENANCE OF TRAFFIC DETAILS

STAGE IB - REMOVABLE CONSTRUCTION PAVEMENT MARKINGS

NB HWY. 67
4" SKIP WHITE STA. 600+00 TO STA. 605+25 = 130 LIN. FT.
4" SOLID WHITE STA. 600+00 TO STA. 605+25 = 525 LIN. FT.
4" SOLID YELLOW STA. 600+00 TO STA. 605+25 = 525 LIN. FT.

SB HWY. 67
4" SKIP WHITE STA. 600+00 TO STA. 606+00 = 150 LIN. FT.
4" SOLID WHITE STA. 600+00 TO STA. 606+00 = 600 LIN. FT.
4" SOLID YELLOW STA. 600+00 TO STA. 606+00 = 600 LIN. FT.

EXIT RAMP
4" SOLID WHITE STA. 604+75 TO STA. 606+00 = 125 LIN. FT.
4" SOLID YELLOW STA. 600+50 TO STA. 603+60 = 310 LIN. FT.

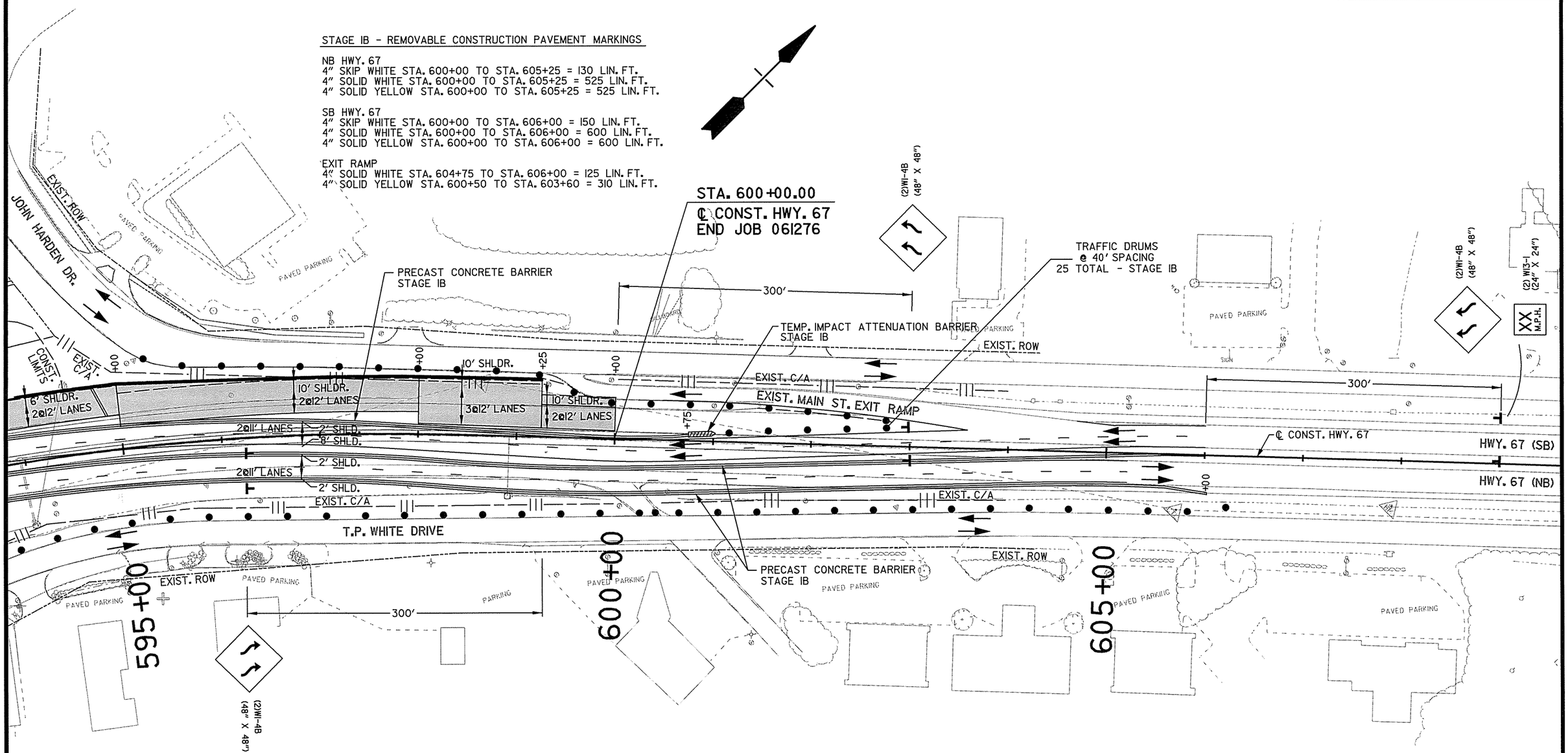

STAGE CONST.

NOTE:
SEE MAINTENANCE OF TRAFFIC ADVANCE WARNING SIGNS, TYPICALS SECTIONS AND TEMP. RAMP PLAN & PROFILE SHEETS FOR ADDITIONAL INFORMATION.

NOTE:
LANE SHIFT ALIGNMENTS BASED ON 3 DEGREE CURVES UNLESS OTHERWISE NOTED ON THE PLANS.

STATE OF ARKANSAS
REGISTERED PROFESSIONAL ENGINEER
No. 9808
JAMES L. BARR
8/20/13

STAGE IB
MAINTENANCE OF TRAFFIC DETAILS

r061276.MOT STAGE 1B.dgn 8/19/2013 12:06:06 PM

DATE REVISED	DATE FILMED	DATE REVISED	DATE FILMED	FED.RD. DIST.NO.	STATE	FED.AID PROJ.NO.	SHEET NO.	TOTAL SHEETS
				6	ARK.			
				JOB NO.		061276	74	438

(2) MAINTENANCE OF TRAFFIC DETAILS

STAGE IC CONST.

1. HWY. 67 SB TRAFFIC TRAVELING ON TEMP. WIDENING CONSTRUCTED IN STAGE IA.
2. HWY. 67 NB TRAFFIC TRAVELING IN EXIST. LANES & TEMP. LANES CONSTRUCTED IN STAGE IA.
3. TRAFFIC FROM REDMOND ROAD WANTING TO TRAVEL SOUTH ON HWY. 67 WILL UTILIZE ENTRANCE RAMP CONSTRUCTED IN STAGE IB.
4. CLOSE EXIST. HWY. 67 SB ENTRANCE AT MAIN ST. AND PLACE DETOUR SIGNING INSTRUCTING TRAFFIC TO USE THE REDMOND RD. ENTRANCE RAMP. - (PORTABLE CHANGEABLE MESSAGE SIGN AS DIRECTED BY THE ENGINEER.)
5. PLACE PRECAST BARRIER WALL AND CONSTRUCT SHADED AREAS AS SHOWN IN PLANS.

STAGE IC - REMOVABLE CONSTRUCTION PAVEMENT MARKINGS

REDMOND RD. ENTRANCE RAMP
4" SOLID WHITE LT. OF C.L. CONST. HWY. 67 STA. 528+47.61 TO LT. OF C.L. CONST. REDMOND ROAD RAMP 4 STA. 567+58.52 = 3453 LIN. FT.
4" SOLID YELLOW LT. OF C.L. CONST. HWY. 67 STA. 528+47.61 TO RT. OF C.L. CONST. REDMOND ROAD RAMP 4 STA. 567+73.48 = 3940 LIN. FT.

STA. 534+00.00 ℄ CONST. HWY. 67
BEGIN JOB 061276

(2) W1-4B (48" X 48")
(2) W13-1 (24" X 24")
XX M.P.H.
FLOOD PLAIN LIMIT
300'
PRECAST CONCRETE BARRIER STAGE IC - RETAIN FROM STAGE IB
TRAFFIC DRUMS @ 40' SPACING 33 TOTAL - STAGE IC
TEMP. IMPACT ATTENUATION BARRIER STAGE IC - RETAIN FROM STAGE IB
EXIST. ROW & C/A
40'
N 51°51'35" E
℄ CONST. HWY. 67
HWY. 67 (SB)
10' SHLDR.
14' LANE
2' SHLDR.
2@11' LANES
6' SHLDR.
4' SHLDR.
4@12' LANES
6' SHLDR.
HWY. 67 (NB)
PRECAST CONCRETE BARRIER STAGE IC - RETAIN FROM STAGE IB
525+00
530+00
535+00
540+00
BILLBOARD
EXIST. ROW & C/A
FLOOD PLAIN LIMIT

NOTE:
LANE SHIFT ALIGNMENTS BASED ON 3 DEGREE CURVES UNLESS OTHERWISE NOTED ON THE PLANS.

NOTE:
SEE MAINTENANCE OF TRAFFIC ADVANCE WARNING SIGNS, TYPICALS SECTIONS AND TEMP. RAMP PLAN & PROFILE SHEETS FOR ADDITIONAL INFORMATION.

STATE OF ARKANSAS
REGISTERED PROFESSIONAL ENGINEER
No. 14517
PAUL ROBBINS
8-26-13

STAGE IC
MAINTENANCE OF TRAFFIC DETAILS

r061276.MOT_STAGE 1C.dgn 8/26/2013 10:05:55 AM

DATE REVISED	DATE FILMED	DATE REVISED	DATE FILMED	FED.RD. DIST.NO.	STATE	FED.AID PROJ.NO.	SHEET NO.	TOTAL SHEETS
				6	ARK.			
				JOB NO.		061276	75	438
				(2)	MAINTENANCE OF TRAFFIC DETAILS			

STAGE IC - RELOCATING PRECAST CONCRETE BARRIER

C.L. CONST. HWY. 67 LT. OF L.M.L. STA. 547+00.00 TO STA. 560+46.37 = 1046 LIN. FT.

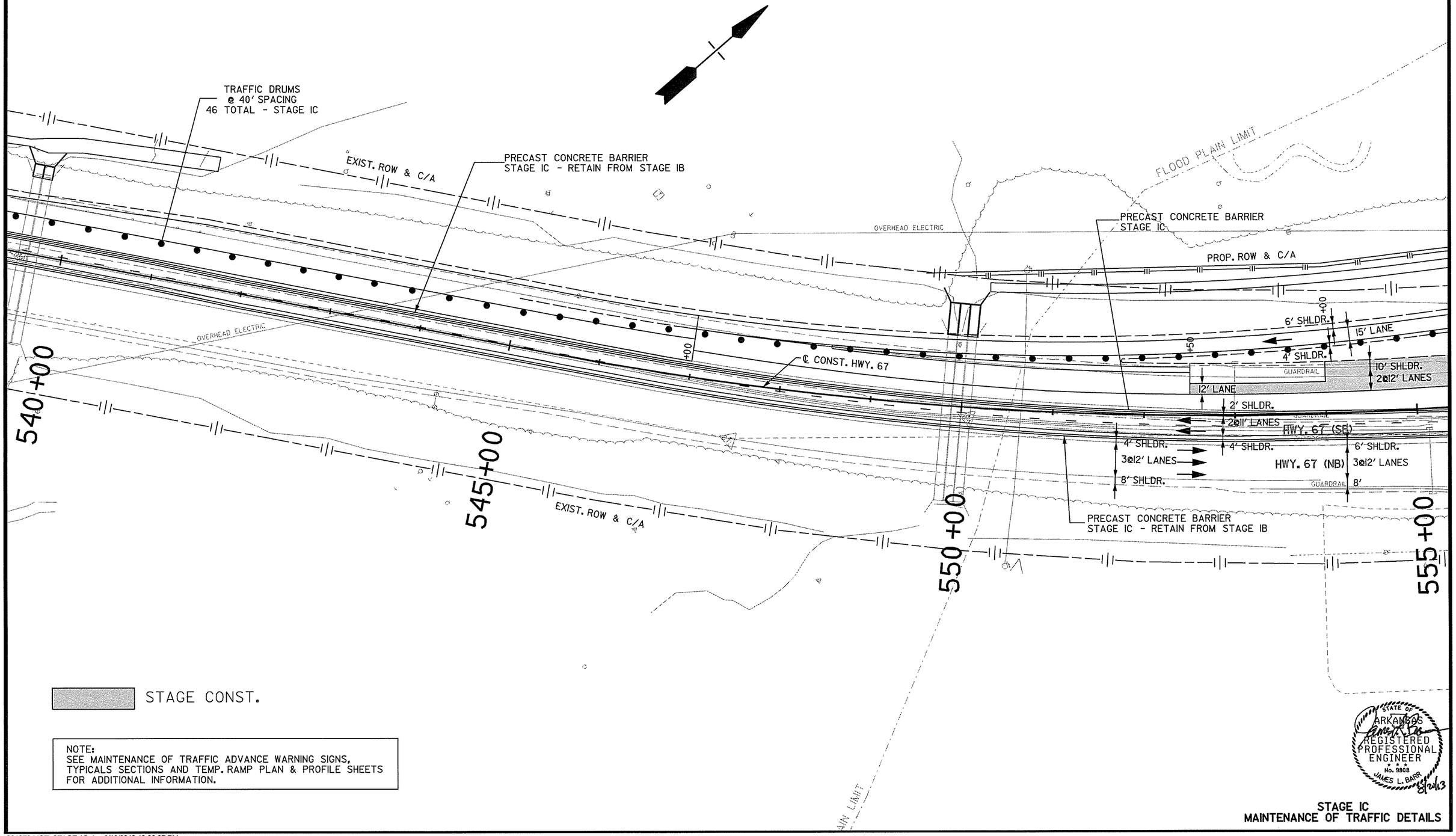

NOTE:
SEE MAINTENANCE OF TRAFFIC ADVANCE WARNING SIGNS, TYPICALS SECTIONS AND TEMP. RAMP PLAN & PROFILE SHEETS FOR ADDITIONAL INFORMATION.

STATE OF ARKANSAS
REGISTERED PROFESSIONAL ENGINEER
No. 9808
JAMES L. BARR
8/22/13

STAGE IC
MAINTENANCE OF TRAFFIC DETAILS

r061276.MOT_STAGE 1C.dgn 8/19/2013 12:06:07 PM

DATE REVISED	DATE FILMED	DATE REVISED	DATE FILMED	FED.RD. DIST.NO.	STATE	FED.AID PROJ.NO.	SHEET NO.	TOTAL SHEETS
				6	ARK.			
				JOB NO.		061276	76	438

(2) MAINTENANCE OF TRAFFIC DETAILS

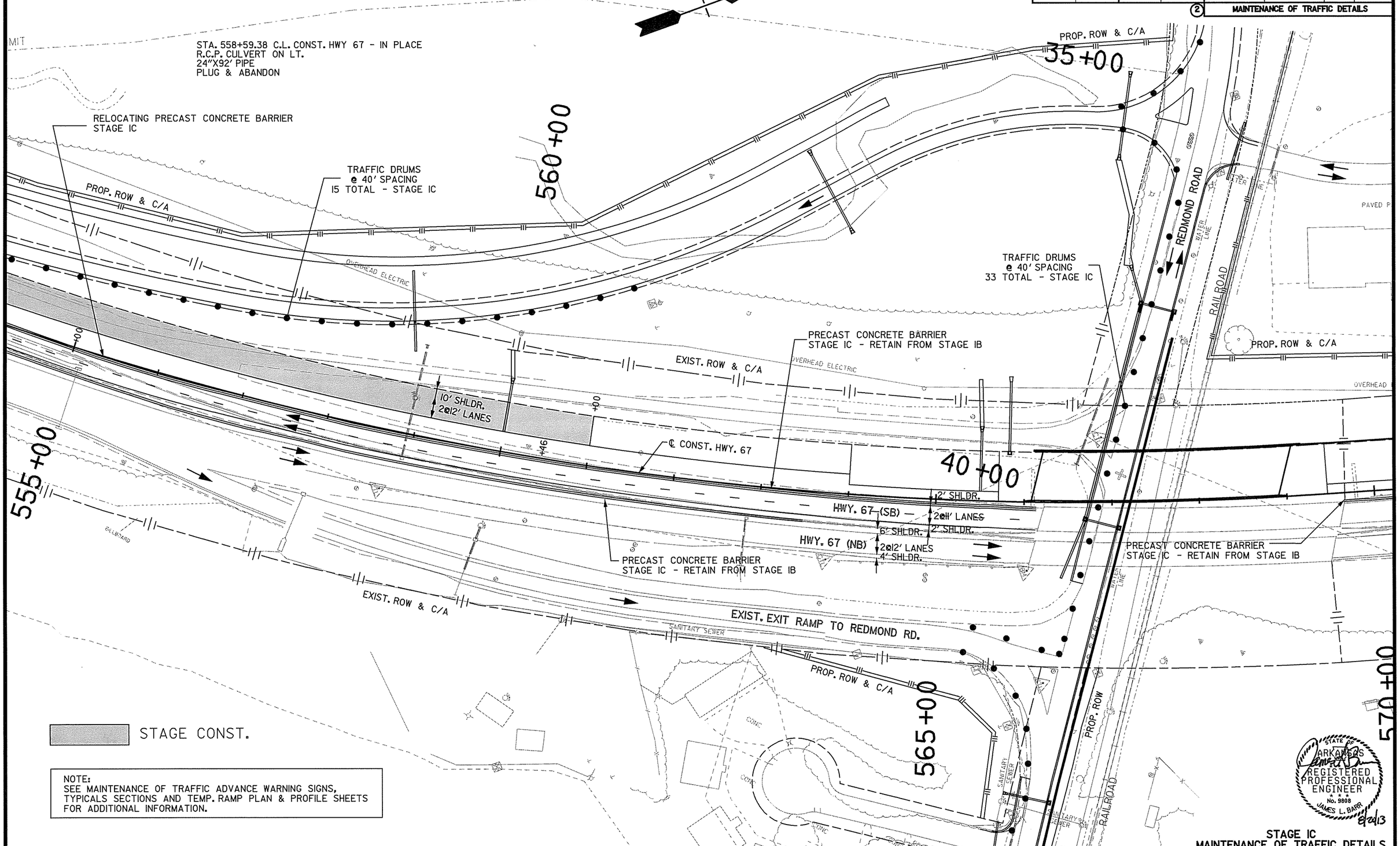

NOTE:
SEE MAINTENANCE OF TRAFFIC ADVANCE WARNING SIGNS, TYPICALS SECTIONS AND TEMP. RAMP PLAN & PROFILE SHEETS FOR ADDITIONAL INFORMATION.

STATE OF ARKANSAS
REGISTERED PROFESSIONAL ENGINEER
No. 9808
JAMES L. BARR
8/20/13

STAGE IC
MAINTENANCE OF TRAFFIC DETAILS

r061276.MOT STAGE 1C.dgn 8/19/2013 12:06:07 PM

DATE REVISED	DATE FILMED	DATE REVISED	DATE FILMED	FED.RD. DIST.NO.	STATE	FED.AID PROJ.NO.	SHEET NO.	TOTAL SHEETS
				6	ARK.			
				JOB NO.		061276	77	438

(2) MAINTENANCE OF TRAFFIC DETAILS

STAGE IC - RELOCATING PRECAST CONCRETE BARRIER

C.L. CONST. HWY. 67 LT. OF L.M.L. STA. 572+58.60 TO STA. 582+78.63 = 1020 LIN. FT.

(I) RII-2 (48" X 30")
(I) 8' BARR. TYP. III LT.

ROAD CLOSED

ROAD CLOSED

(I) RII-2 (48" X 30")
(I) 8' BARR. TYP. III RT.

195+00

CITY PARK

PAVED PARKING

PRECAST CONCRETE BARRIER
STAGE IC - RETAIN FROM STAGE IB

PROP. ROW & C/A

TRAFFIC DRUMS
@ 20' SPACING
9 TOTAL - STAGE IC

RELOCATING PRECAST CONCRETE BARRIER
STAGE IC

EXIST. ROW & C/A

CONST. LIMITS

+50

+55

+00

+80

6' SHLDR.
15' LANE

4' SHLDR.

6' SHLDR.
2@12' LANES

12' LANE

6' SHLDR.
2@12' LANES

2' SHLDR.

2@12' LANES

+67

+79

6' SHLDR.

6' SHLDR.
2@12' LANES
4' SHLDR.

HWY. 67 (SB)

HWY. 67 (NB)

℄ CONST. HWY. 67

HWY. 67 (SB)

HWY. 67 (NB)

300'

200+00

MAIN ST.

STORM SEWER

WATER LINE

GAS LINE

FIBER OPTIC

SANITARY SEWER

SCHOOL DRIVE

STORM SEWER

PROP. ROW

SIGN

PAVED PARKING

T.C.E.

580+00

585+00

590+00

XX M.P.H.

(2) W13-1 (24" X 24")

(2) W1-4B (48" X 48")

STAGE CONST.

NOTE:
SEE MAINTENANCE OF TRAFFIC ADVANCE WARNING SIGNS, TYPICALS SECTIONS AND TEMP. RAMP PLAN & PROFILE SHEETS FOR ADDITIONAL INFORMATION.

NOTE:
LANE SHIFT ALIGNMENTS BASED ON 3 DEGREE CURVES UNLESS OTHERWISE NOTED ON THE PLANS.

STATE OF ARKANSAS
REGISTERED PROFESSIONAL ENGINEER
No. 9808
JAMES L. BARR
8/22/13

STAGE IC
MAINTENANCE OF TRAFFIC DETAILS

r061276.MOT STAGE 1C.dgn 8/19/2013 12:06:07 PM

DATE REVISED	DATE FILMED	DATE REVISED	DATE FILMED	FED.RD. DIST.NO.	STATE	FED.AID PROJ.NO.	SHEET NO.	TOTAL SHEETS
				6	ARK.			
				JOB NO.		061276	78	438

(2) MAINTENANCE OF TRAFFIC DETAILS

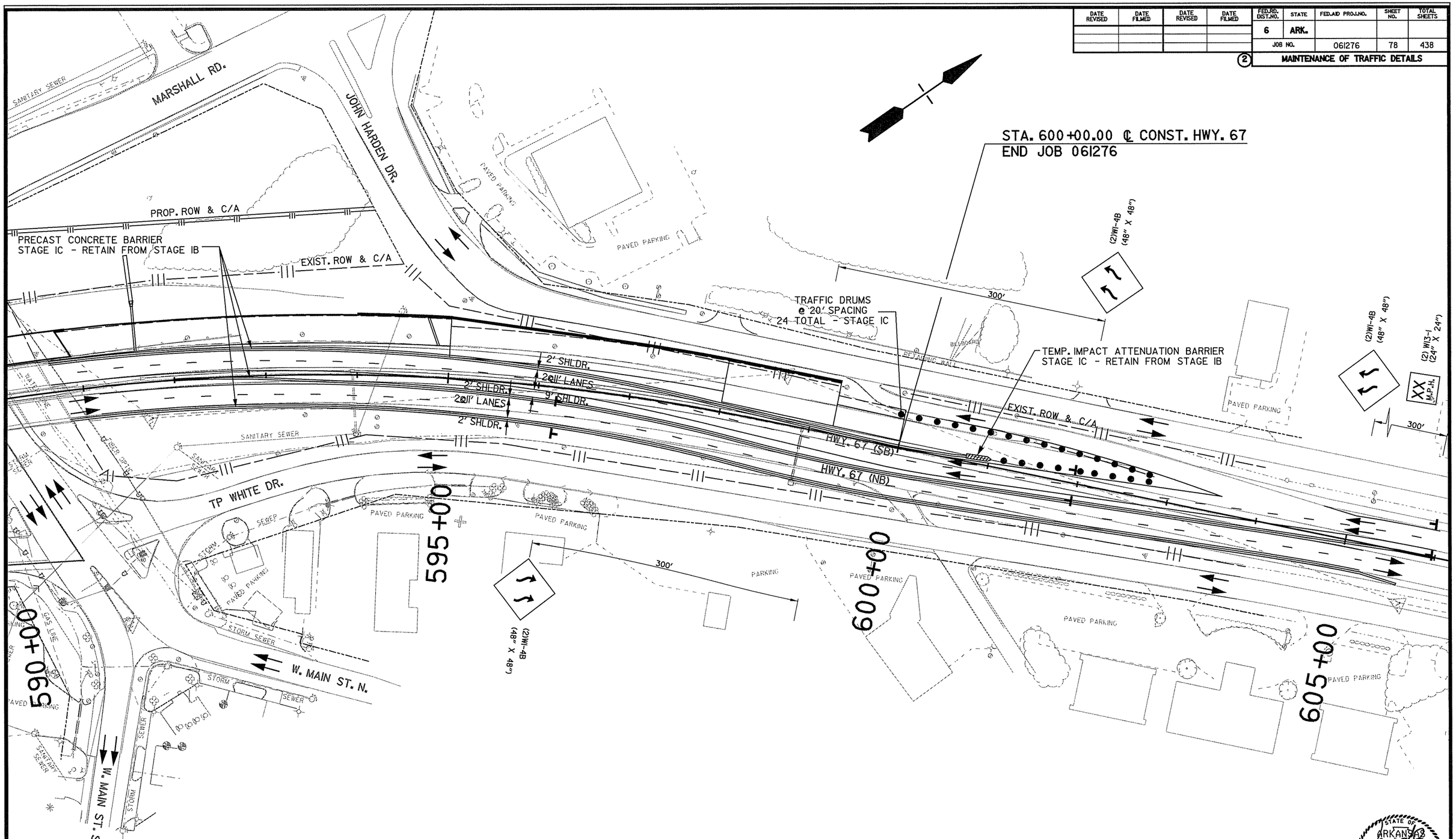

NOTE:
SEE MAINTENANCE OF TRAFFIC ADVANCE WARNING SIGNS, TYPICALS SECTIONS AND TEMP. RAMP PLAN & PROFILE SHEETS FOR ADDITIONAL INFORMATION.

NOTE:
LANE SHIFT ALIGNMENTS BASED ON 3 DEGREE CURVES UNLESS OTHERWISE NOTED ON THE PLANS.

STATE OF ARKANSAS
REGISTERED PROFESSIONAL ENGINEER
No. 9808
JAMES L. BARR
8/20/13

STAGE IC
MAINTENANCE OF TRAFFIC DETAILS

r061276.MOT STAGE 1C.dgn 8/19/2013 12:06:08 PM

DATE REVISED	DATE FILMED	DATE REVISED	DATE FILMED	FED.RD. DIST.NO.	STATE	FED.AID PROJ.NO.	SHEET NO.	TOTAL SHEETS
				6	ARK.			
				JOB NO.		061276	79	438

(2) MAINTENANCE OF TRAFFIC DETAILS

STAGE 2 CONST.

1. HWY. 67 SB TRAFFIC TRAVELING IN TEMP. LANES ON PROPOSED ROADWAY CONSTRUCTED IN STAGE IC.
2. HWY. 67 NB TRAFFIC TRAVELING IN EXIST. LANES & TEMP. LANES CONSTRUCTED IN STAGE IA.
3. TRAFFIC FROM REDMOND ROAD WANTING TO TRAVEL SOUTH ON HWY. 67 WILL UTILIZE ENTRANCE RAMP CONSTRUCTED IN STAGE IB.
4. REMOVE TEMP. RAMP 4 CONNECTION.
5. THE MAIN ST. ENTRANCE RAMP SHALL REMAIN CLOSED AND DETOUR SIGNING SHALL REMAIN IN PLACE.
6. PLACE PRECAST BARRIER WALL AND CONSTRUCT SHADED AREAS SHOWN IN PLANS.

STAGE 2 - REMOVABLE CONSTRUCTION PAVEMENT MARKINGS

SB HWY. 67
4" SKIP WHITE STA. 534+00.00 TO STA. 600+96.10 = 1674 LIN. FT.
4" SOLID WHITE STA. 546+89.12 TO STA. 600+96.21 = 5407 LIN. FT.
4" SOLID YELLOW STA. 534+00.00 TO STA. 600+95.98 = 6696 LIN. FT.

STAGE 2 - FURNISHING AND INSTALLING PRECAST CONCRETE BARRIER

℄ CONST. HWY. 67 RT. OF L.M.L. STA. 530+00.00 TO STA. 602+00.00 = 7200 LIN. FT.

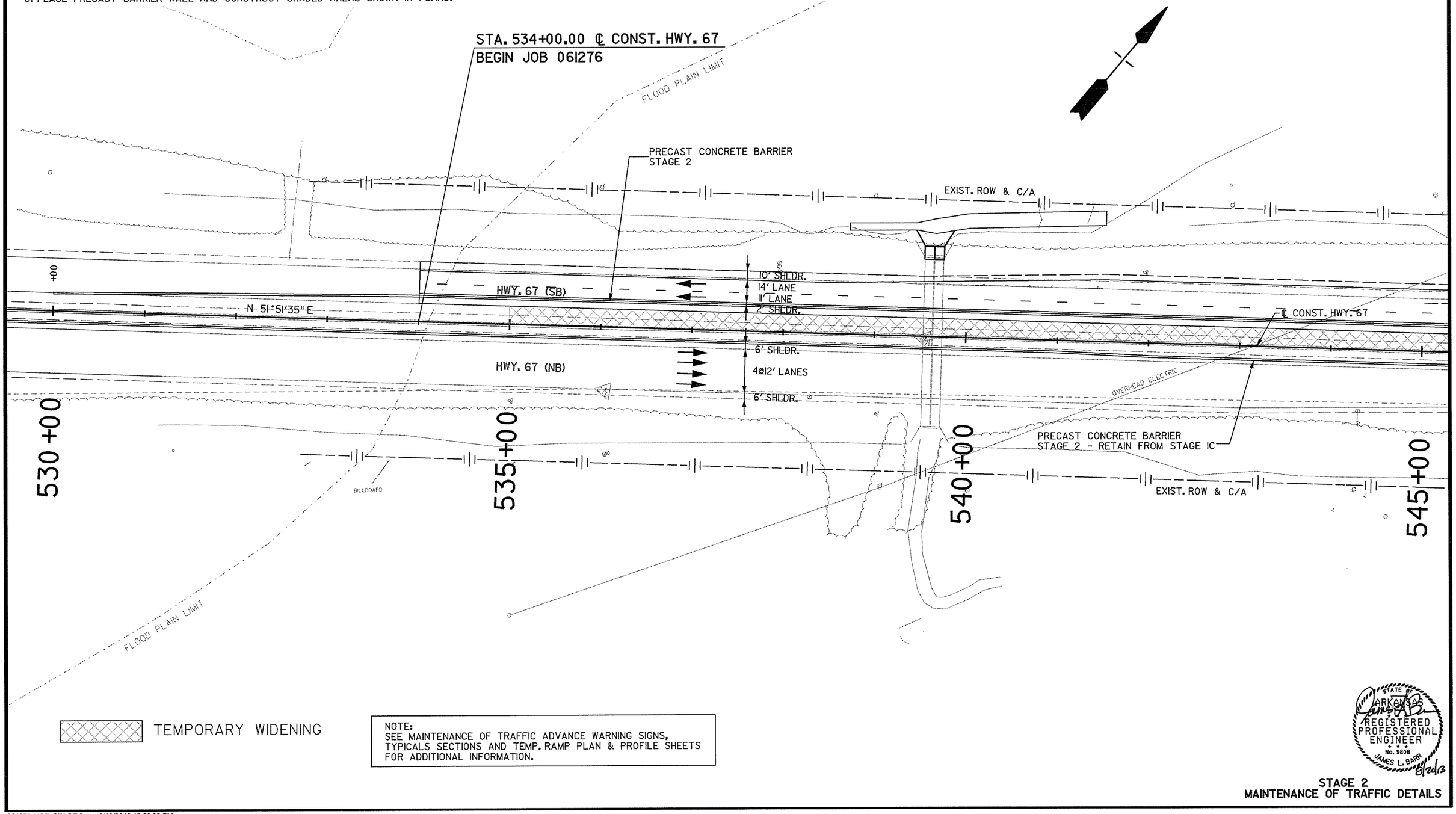

TEMPORARY WIDENING

NOTE:
SEE MAINTENANCE OF TRAFFIC ADVANCE WARNING SIGNS, TYPICALS SECTIONS AND TEMP. RAMP PLAN & PROFILE SHEETS FOR ADDITIONAL INFORMATION.

STATE OF ARKANSAS
REGISTERED PROFESSIONAL ENGINEER
No. 9808
JAMES L. BARR
8/20/13

STAGE 2
MAINTENANCE OF TRAFFIC DETAILS

r061276 MOT_STAGE 2.dgn 8/19/2013 12:06:09 PM

DATE REVISED	DATE FILMED	DATE REVISED	DATE FILMED

FED.RD. DIST.NO.	STATE	FED.AID PROJ.NO.	SHEET NO.	TOTAL SHEETS
6	ARK.			
JOB NO.		061276	80	438

(2) **MAINTENANCE OF TRAFFIC DETAILS**

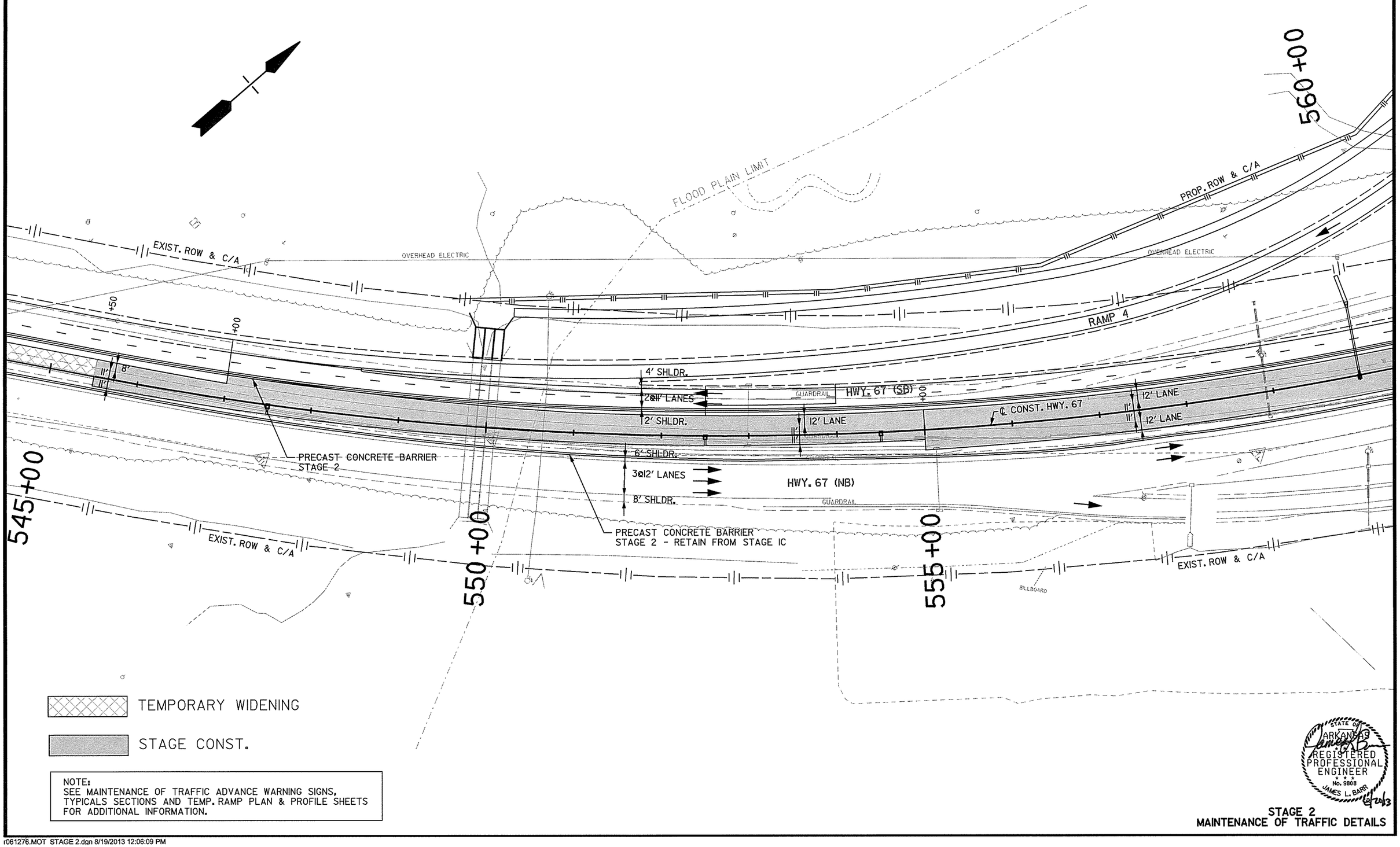

TEMPORARY WIDENING

STAGE CONST.

NOTE:
SEE MAINTENANCE OF TRAFFIC ADVANCE WARNING SIGNS, TYPICALS SECTIONS AND TEMP. RAMP PLAN & PROFILE SHEETS FOR ADDITIONAL INFORMATION.

STATE OF ARKANSAS
REGISTERED PROFESSIONAL ENGINEER
No. 9808
JAMES L. BARR
8/20/13

STAGE 2
MAINTENANCE OF TRAFFIC DETAILS

r061276.MOT STAGE 2.dgn 8/19/2013 12:06:09 PM

DATE REVISED	DATE FILMED	DATE REVISED	DATE FILMED	FED.RD. DIST.NO.	STATE	FED.AID PROJ.NO.	SHEET NO.	TOTAL SHEETS
				6	ARK.			
				JOB NO.		061276	81	438

(2) MAINTENANCE OF TRAFFIC DETAILS

STAGE 2 - FURNISHING AND INSTALLING PRECAST CONCRETE BARRIER

℄ CONST. HWY. 67 LT. OF R.M.L. STA. 573+00.00 TO STA. 589+00.00 = 1600 LIN. FT.

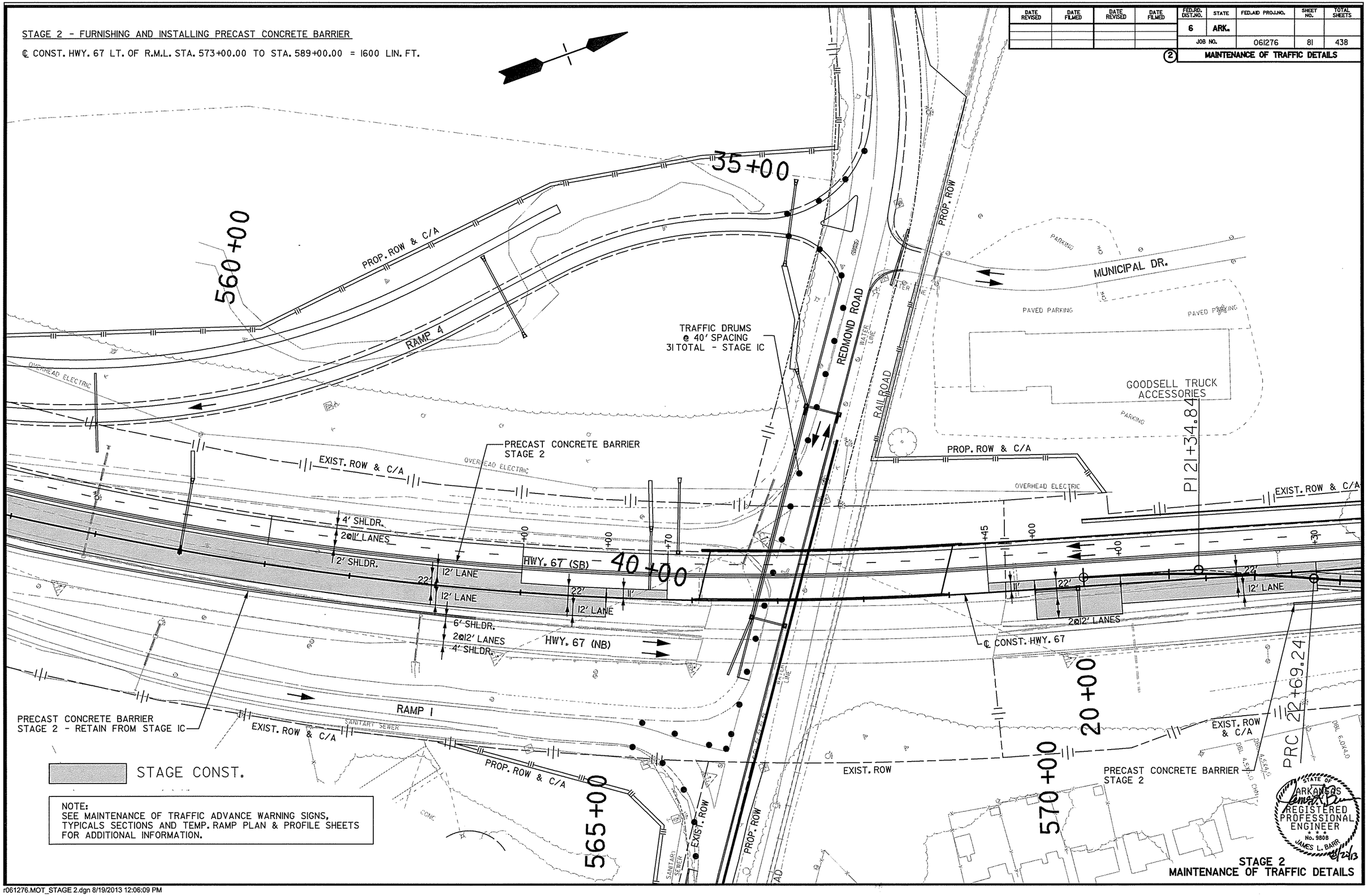

NOTE:
SEE MAINTENANCE OF TRAFFIC ADVANCE WARNING SIGNS, TYPICALS SECTIONS AND TEMP. RAMP PLAN & PROFILE SHEETS FOR ADDITIONAL INFORMATION.

STATE OF ARKANSAS
REGISTERED PROFESSIONAL ENGINEER
No. 9808
JAMES L. BARR
8/21/13

STAGE 2
MAINTENANCE OF TRAFFIC DETAILS

r061276.MOT_STAGE 2.dgn 8/19/2013 12:06:09 PM

DATE REVISED	DATE FILMED	DATE REVISED	DATE FILMED	FED.RD. DIST.NO.	STATE	FED.AID PROJ.NO.	SHEET NO.	TOTAL SHEETS
				6	ARK.			
				JOB NO.		061276	82	438

(2) MAINTENANCE OF TRAFFIC DETAILS

PAVED PARKING
GOODSELL TRUCK ACCESSORIES
CITY PARK
PAVED PARKING
PAVED PARKING
TRAFFIC DRUMS @ 40' SPACING 10 TOTAL - STAGE 2
PRECAST CONCRETE BARRIER STAGE 2
TEMP. RAMP 1 CONNECTION
PI 21+34.84
PRC 25+21.29
PI 25+84.33
+30
+00
+50
EXIST. ROW & C/A
EXIST. ROW & C/A
HWY. 67 (SB)
2 @ 11' LANES
2' SHLDR.
22'
12' LANE
11'
12' LANE
4' SHLDR.
2 @ 12' LANES
11'
2' SHLDR.
HWY. 67 (SB)
℄ CONST. HWY. 67
4' SHLDR.
15' LANE
HWY. 67 (NB)
2' SHLDR.
2 @ 12' LANES
6' SHLDR.
HWY. 67 (NB)
300'
N 20°32'14" E
PRC 22+69.24
PI 23+05.45
575+00
25+00
PI 26+47.32
SANITARY SEWER
SCHOOL DRIVE
STORM SEWER
STORM SEWER
EXIST. ROW
PROP. ROW
EXIST. ROW
EXIST. ROW
PAVED PARKING
PAVED PARKING
30+00
T.C.E.
PARKING
PRECAST CONCRETE BARRIER STAGE 2
580+00
585+00
XX M.P.H.
(2) W13-1 (24" X 24")
(2) W1-4B (48" X 48")

STAGE CONST.

NOTE:
SEE MAINTENANCE OF TRAFFIC ADVANCE WARNING SIGNS, TYPICALS SECTIONS AND TEMP. RAMP PLAN & PROFILE SHEETS FOR ADDITIONAL INFORMATION.

NOTE:
LANE SHIFT ALIGNMENTS BASED ON 3 DEGREE CURVES UNLESS OTHERWISE NOTED ON THE PLANS.

STATE OF ARKANSAS
REGISTERED PROFESSIONAL ENGINEER
No. 9808
JAMES L. BARR
8/22/13

STAGE 2
MAINTENANCE OF TRAFFIC DETAILS

r061276.MOT_STAGE 2.dgn 8/19/2013 12:06:09 PM

DATE REVISED	DATE FILMED	DATE REVISED	DATE FILMED

FED.RD. DIST.NO.	STATE	FED.AID PROJ.NO.	SHEET NO.	TOTAL SHEETS
6	ARK.			
JOB NO.		061276	83	438

(2) MAINTENANCE OF TRAFFIC DETAILS

STAGE 2 - FURNISHING AND INSTALLING PRECAST CONCRETE BARRIER

℄ CONST. HWY. 67 LT. OF L.M.L. STA. 597+90.15 TO STA. 601+00.00 = 310 LIN. FT.
℄ CONST. HWY. 67 RT. OF R.M.L. STA. 604+80.67 TO STA. 610+52.25 = 572 LIN. FT.
℄ CONST. HWY. 67 LT. OF T.P. WHITE DR. STA. 606+00.00 TO STA. 608+48.69= 249 LIN. FT.

STA. 600+00.00 ℄ CONST. HWY. 67
END JOB 061276

(I) RII-2 (48" X 30")
(I) 8' BARR. TYP. III LT.
ROAD CLOSED
ROAD CLOSED
(I) RII-2 (48" X 30")
(I) 8' BARR. TYP. III RT.

195+00
TRAFFIC DRUMS @ 20' SPACING 9 TOTAL - STAGE 2
MAIN ST.
EXIST. ROW
MARSHALL RD.
EXIST. ROW
PRECAST CONCRETE BARRIER STAGE 2
PROP. ROW & C/A
EXIST. ROW & C/A
JOHN HARDEN DR.
PAVED PARKING
PAVED PARKING
PRECAST CONCRETE BARRIER STAGE 2
EXIST. ROW
2' SHLDR.
2@11' LANES
HWY. 67 (SB)
2' SHLDR.
2' SHLDR.
2@11' LANES
2' SHLDR.
HWY. 67 (NB)
EXIST. C/A
2@12' LANE
2@12' LANES
6'
℄ CONST. HWY. 67
2@12' LANES
12' LANE
11'
HWY. 67 (SB)
HWY. 67 (NB)
300'
200+00
SANITARY SEWER
EXIST. C/A
TP WHITE DR.
PAVED PARKING
PAVED PARKING
EXIST. ROW
300'
595+00
600+00
T.C.E.
T.C.E.
EXIST. ROW
PAVED PARKING
PAVED PARKING
PARKING
PAVED PARKING
590+00
W. MAIN ST. S.
W. MAIN ST. N.
(2)WI-4B (48" X 48")
585+00
XX M.P.H.
(2)WI3-1 (24" X 24")
(2)WI-4B (48" X 48")
205+00
PRECAST CONCRETE BARRIER STAGE 2 - RETAIN FROM STAGE IC

STAGE CONST.

TEMPORARY WIDENING

NOTE:
LANE SHIFT ALIGNMENTS BASED ON 3 DEGREE CURVES UNLESS OTHERWISE NOTED ON THE PLANS.

NOTE:
SEE MAINTENANCE OF TRAFFIC ADVANCE WARNING SIGNS, TYPICALS SECTIONS AND TEMP. RAMP PLAN & PROFILE SHEETS FOR ADDITIONAL INFORMATION.

STATE OF ARKANSAS
REGISTERED PROFESSIONAL ENGINEER
No. 9808
JAMES L. BARR
8/21/13

STAGE 2
MAINTENANCE OF TRAFFIC DETAILS

r061276.MOT STAGE 2.dgn 8/19/2013 12:06:10 PM

DATE REVISED	DATE FILMED	DATE REVISED	DATE FILMED	FED.RD. DIST.NO.	STATE	FED.AID PROJ.NO.	SHEET NO.	TOTAL SHEETS
				6	ARK.			
				JOB NO.		061276	84	438

(2) MAINTENANCE OF TRAFFIC DETAILS

STAGE 2 - CONSTRUCTION PAVEMENT MARKINGS

NB HWY. 67
4" SKIP WHITE STA. 606+00.00 TO STA. 607+91.20 = 48 LIN. FT.
4" SOLID WHITE STA. 606+00.00 TO STA. 607+91.20 = 191 LIN. FT.
4" SOLID YELLOW STA. 606+00.00 TO STA. 607+91.20 = 191 LIN. FT.

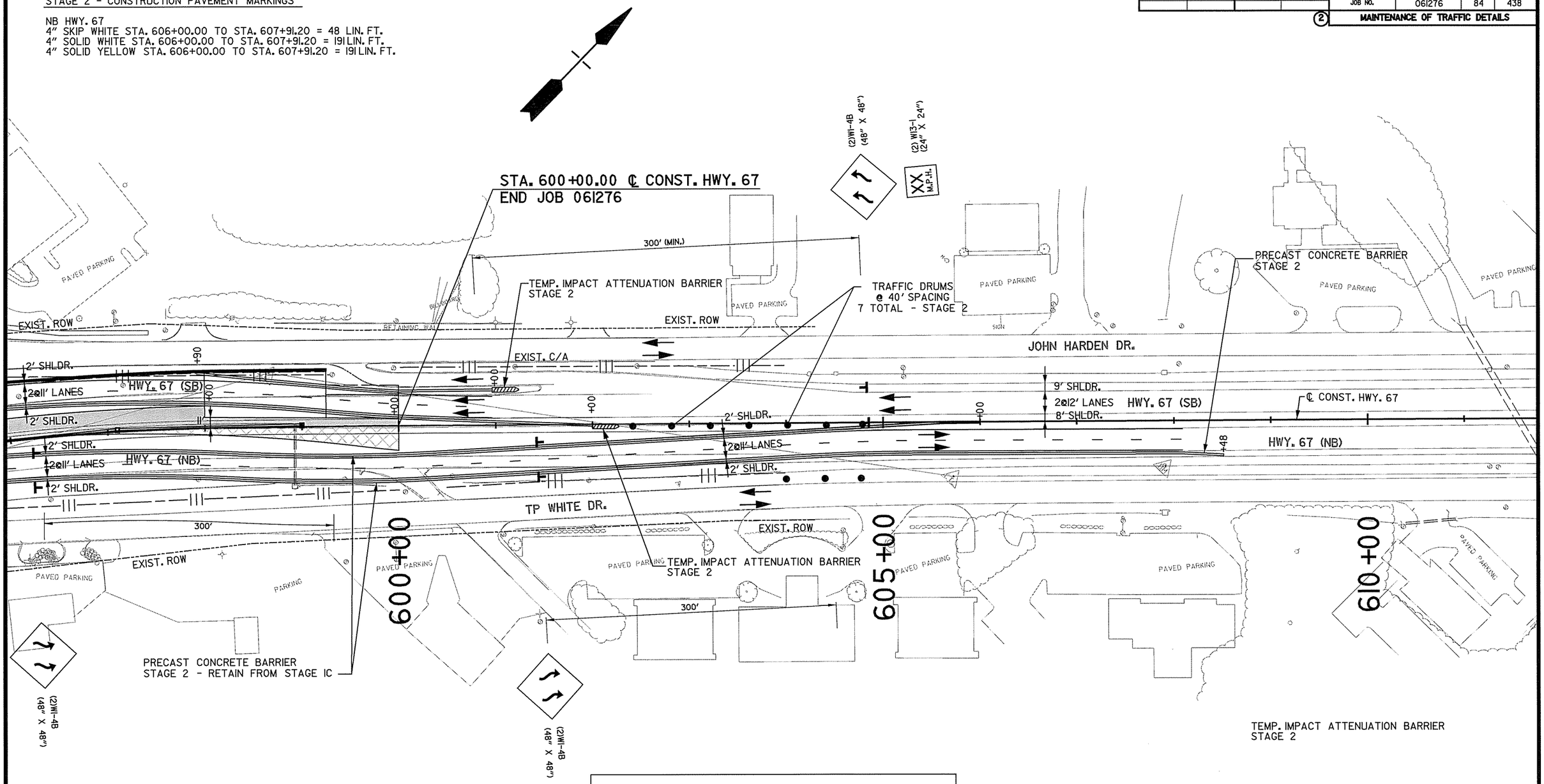

STAGE CONST.

TEMPORARY WIDENING

NOTE:
LANE SHIFT ALIGNMENTS BASED ON 3 DEGREE CURVES UNLESS OTHERWISE NOTED ON THE PLANS.

NOTE:
SEE MAINTENANCE OF TRAFFIC ADVANCE WARNING SIGNS, TYPICALS SECTIONS AND TEMP. RAMP PLAN & PROFILE SHEETS FOR ADDITIONAL INFORMATION.

STATE OF ARKANSAS
REGISTERED PROFESSIONAL ENGINEER
No. 9808
JAMES L. BARR
8/21/13

STAGE 2
MAINTENANCE OF TRAFFIC DETAILS

r061276.MOT STAGE 2.dan 8/19/2013 12:06:10 PM

DATE REVISED	DATE FILMED	DATE REVISED	DATE FILMED	FED.RD. DIST.NO.	STATE	FED.AID PROJ.NO.	SHEET NO.	TOTAL SHEETS
				6	ARK.			
				JOB NO.		061276	85	438
				(2)	MAINTENANCE OF TRAFFIC DETAILS			

STAGE 3A CONST.

1. REDMOND RD. EXIT RAMP SHALL REMAIN OPEN DURING CONSTRUCTION ACTIVITIES AS LONG AS POSSIBLE. CONSTRUCTION NORTH OF REDMOND RD. AS INDICATED ON THE STAGE 3A MAINTENANCE OF TRAFFIC DETAILS SHALL BE COMPLETE BEFORE CLOSING THE REDMOND RD. EXIT RAMP.
2. HWY. 67 SB TRAFFIC TRAVELING IN TEMP. LANES ON PROPOSED ROADWAY CONSTRUCTED IN STAGE IC.
3. HWY. 67 NB TRAFFIC TRAVELING IN TEMP. LANES ON PROPOSED ROADWAY CONSTRUCTED IN STAGE 2.
4. TRAFFIC FROM REDMOND ROAD WANTING TO TRAVEL SOUTH ON HWY. 67 WILL UTILIZE ENTRANCE RAMP CONSTRUCTED IN STAGE IB.
5. THE REDMOND ROAD EXIT RAMP SHALL BE CLOSED DURING STAGE 3A CONSTRUCTION SOUTH OF REDMOND RD.
6. THE MAIN ST. ENTRANCE RAMP SHALL REMAIN CLOSED AND DETOUR SIGNING SHALL REMAIN IN PLACE.
7. MAIN ST. TEMP. RAMP ICONNECTION SHALL BE OPEN TO TRAFFIC - (PORTABLE CHANGEABLE MESSAGE SIGN AS DIRECTED BY THE ENGINEER.)
8. PLACE PRECAST BARRIER WALL AND CONSTRUCT SHADED AREAS SHOWN IN PLANS.

STAGE 3A - REMOVABLE CONSTRUCTION PAVEMENT MARKINGS

NB HWY. 67
4" SKIP WHITE C.L. CONST. HWY. 67 RT. STA. 528+08.99 TO STA. 601+94.14 = 1848 LIN. FT.
4" SOLID WHITE C.L. CONST. HWY. 67 RT. STA. 528+08.99 TO STA. 570+57.29 = 4248 LIN. FT.
4" SOLID YELLOW C.L. CONST. HWY. 67 RT. STA. 528+08.99 TO STA. 601+94.72 = 7386 LIN. FT.

STAGE 3A - FURNISHING AND INSTALLING PRECAST CONCRETE BARRIER

℄ CONST. HWY. 67 RT. STA. 530+53.03 TO STA. 566+00.00 = 3547 LIN. FT.

STAGE 3A - REMOVAL OF PERMANENT PAVEMENT MARKINGS

C.L. CONST. HWY 67 RT. STA. 528+00.00 TO STA. 531+00.00 = 300 LIN. FT.

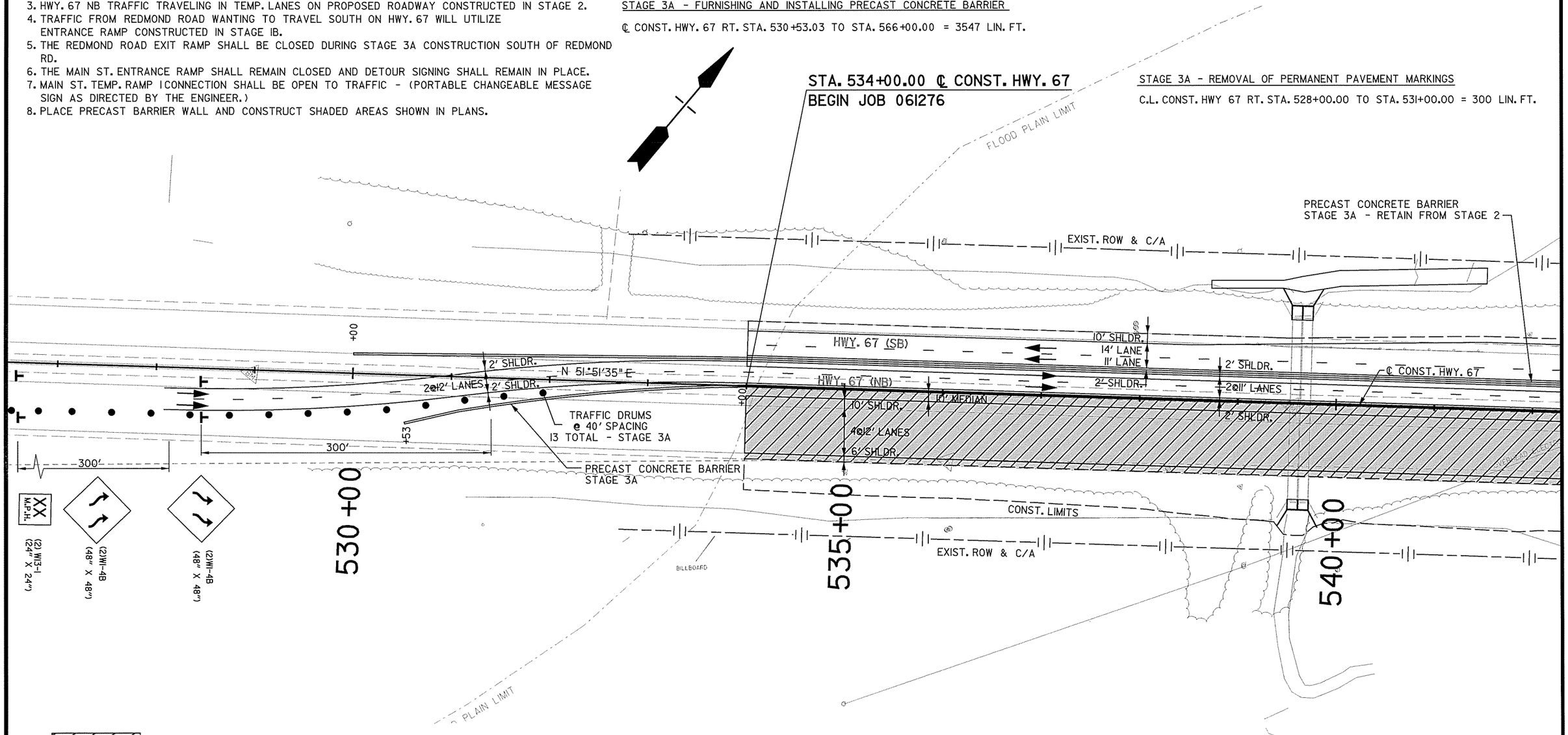

STAGE CONST. AFTER REDMOND RD. EXIT RAMP CLOSURE

STAGE CONST. PRIOR TO REDMOND RD. EXIT RAMP CLOSURE

NOTE:
LANE SHIFT ALIGNMENTS BASED ON 3 DEGREE CURVES UNLESS OTHERWISE NOTED ON THE PLANS.

NOTE:
SEE MAINTENANCE OF TRAFFIC ADVANCE WARNING SIGNS, TYPICALS SECTIONS AND TEMP. RAMP PLAN & PROFILE SHEETS FOR ADDITIONAL INFORMATION.

STATE OF ARKANSAS
REGISTERED PROFESSIONAL ENGINEER
No. 14517
PAUL ROBBINS
8-26-13

STAGE 3A
MAINTENANCE OF TRAFFIC DETAILS

r061276.MOT_STAGE 3A.dgn 8/26/2013 10:05:57 AM

DATE REVISED	DATE FILMED	DATE REVISED	DATE FILMED	FED.RD. DIST.NO.	STATE	FED.AID PROJ.NO.	SHEET NO.	TOTAL SHEETS
				6	ARK.			
				JOB NO.		061276	86	438

(2) MAINTENANCE OF TRAFFIC DETAILS

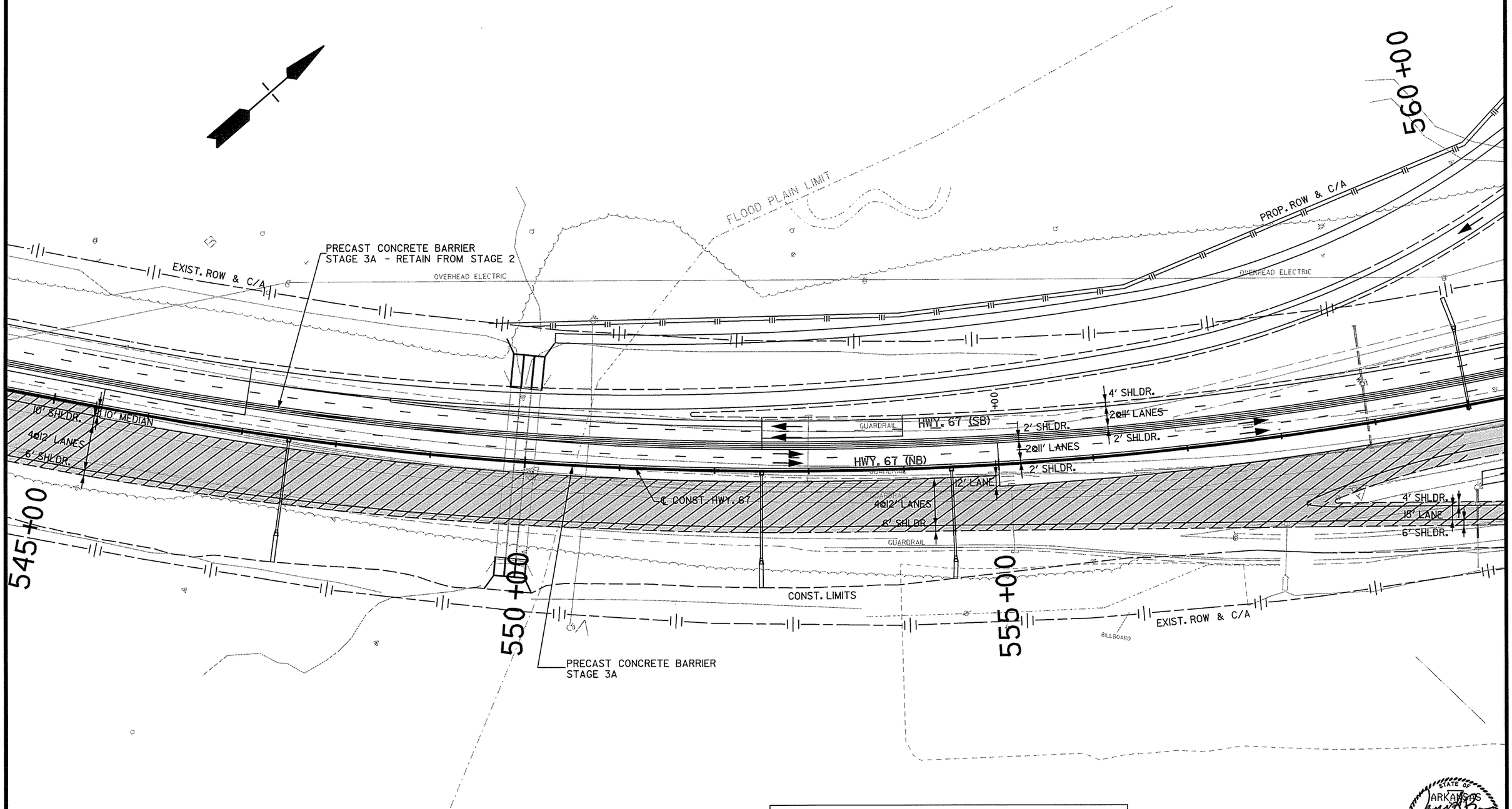

STAGE CONST. AFTER REDMOND RD. EXIT RAMP CLOSURE

STAGE CONST. PRIOR TO REDMOND RD. EXIT RAMP CLOSURE

NOTE:
SEE MAINTENANCE OF TRAFFIC ADVANCE WARNING SIGNS, TYPICALS SECTIONS AND TEMP. RAMP PLAN & PROFILE SHEETS FOR ADDITIONAL INFORMATION.

STATE OF ARKANSAS
REGISTERED PROFESSIONAL ENGINEER
No. 9808
JAMES L. BARR
8/20/13

STAGE 3A
MAINTENANCE OF TRAFFIC DETAILS

r061276.MOT STAGE 3A.dgn 8/19/2013 12:06:11 PM

DATE REVISED	DATE FILMED	DATE REVISED	DATE FILMED	FED.RD. DIST.NO.	STATE	FED.AID PROJ.NO.	SHEET NO.	TOTAL SHEETS
				6	ARK.			
				JOB NO.		061276	87	438

(2) MAINTENANCE OF TRAFFIC DETAILS

STAGE 3A - REMOVABLE CONSTRUCTION PAVEMENT MARKINGS

NB HWY. 67
4" SOLID WHITE C.L. CONST. HWY. 67 LT. STA. 572+99.75 TO RT. STA. 601+94.74 = 2901 LIN. FT.

STAGE 3A - CONSTRUCTION PAVEMENT MARKINGS

TEMP. MAIN ST. EXIT RAMP
4" SOLID WHITE C.L. CONST. HWY. 67 LT. STA. 570+57.29 TO RT. STA. 576+04.48 = 549 LIN. FT.
4" SOLID YELLOW C.L. CONST. HWY. 67 LT. STA. 572+99.75 TO RT. STA. 577+76.26 = 478 LIN. FT.

STAGE 3A - FURNISHING AND INSTALLING PRECAST CONCRETE BARRIER

℄ CONST. HWY. 67 RT. OF R.M.L. STA. 569+00.00 TO STA. 582+32.06 = 1282 LIN. FT.
℄ CONST. HWY. 67 RT. OF R.M.L. 573+53.86 TO STA. 604+54.21 = 3100 LIN. FT.
℄ CONST. HWY. 67 LT. OF TEMP. RAMP 1 CONN. STA. 573+53.86 TO STA. 579+25.57 = 571 LIN. FT.

NOTE:
SEE MAINTENANCE OF TRAFFIC ADVANCE WARNING SIGNS, TYPICALS SECTIONS AND TEMP. RAMP PLAN & PROFILE SHEETS FOR ADDITIONAL INFORMATION.

560+00
565+00
570+00
35+00
40+00
PROP. ROW & C/A
EXIST. ROW & C/A
RAMP 4
RAMP 1
OVERHEAD ELECTRIC
REDMOND ROAD
RAILROAD
WATER LINE
SANITARY SEWER
MUNICIPAL DR.
PARKING
PAVED PARKING
TEMP. IMPACT ATTENUATION BARRIER STAGE 3A
GOODSELL TRUCK ACCESSORIES
PRECAST CONCRETE BARRIER STAGE 3A - RETAIN FROM STAGE 2
PRECAST CONCRETE BARRIER STAGE 3A
℄ CONST. HWY. 67
HWY. 67 (SB)
HWY. 67 (NB)
4' SHLDR.
2@11' LANES
2' SHLDR.
2@12' LANES
10' SHLDR.
15' LANE
6' SHLDR.
4@12' LANES
11'
3@12' LANES
CONST. LIMITS
TRAFFIC DRUMS @ 20' SPACING 12 TOTAL - STAGE 3A
(1) RII-2 (48" X 30")
(1) 16' BARR. TYP. III LT.
ROAD CLOSED
ROAD CLOSED
(1) RII-2 (48" X 30")
(1) 16' BARR. TYP. III RT.

STAGE CONST. AFTER REDMOND RD. EXIT RAMP CLOSURE

STAGE CONST. PRIOR TO REDMOND RD. EXIT RAMP CLOSURE

STATE OF ARKANSAS
REGISTERED PROFESSIONAL ENGINEER
No. 9808
JAMES L. BARR
8/19/13

STAGE 3A
MAINTENANCE OF TRAFFIC DETAILS

r061276.MOT_STAGE 3A.dgn 8/19/2013 12:06:12 PM

DATE REVISED	DATE FILMED	DATE REVISED	DATE FILMED

FED.RD. DIST.NO.	STATE	FED.AID PROJ.NO.	SHEET NO.	TOTAL SHEETS
6	ARK.			
JOB NO.		061276	88	438

(2) **MAINTENANCE OF TRAFFIC DETAILS**

STAGE 3A - FURNISHING AND INSTALLING PRECAST CONCRETE BARRIER

℄ CONST. HWY. 67 LT. OF TEMP. RAMP 1CONN. STA. 580+52.88 TO STA. 587+22.26 = 666 LIN. FT.

STAGE 3A - REMOVAL OF PERMANENT PAVEMENT MARKINGS

C.L. CONST. HWY 67 RT. STA. 576+00.00 TO STA. 577+75.00 = 175 LIN. FT.

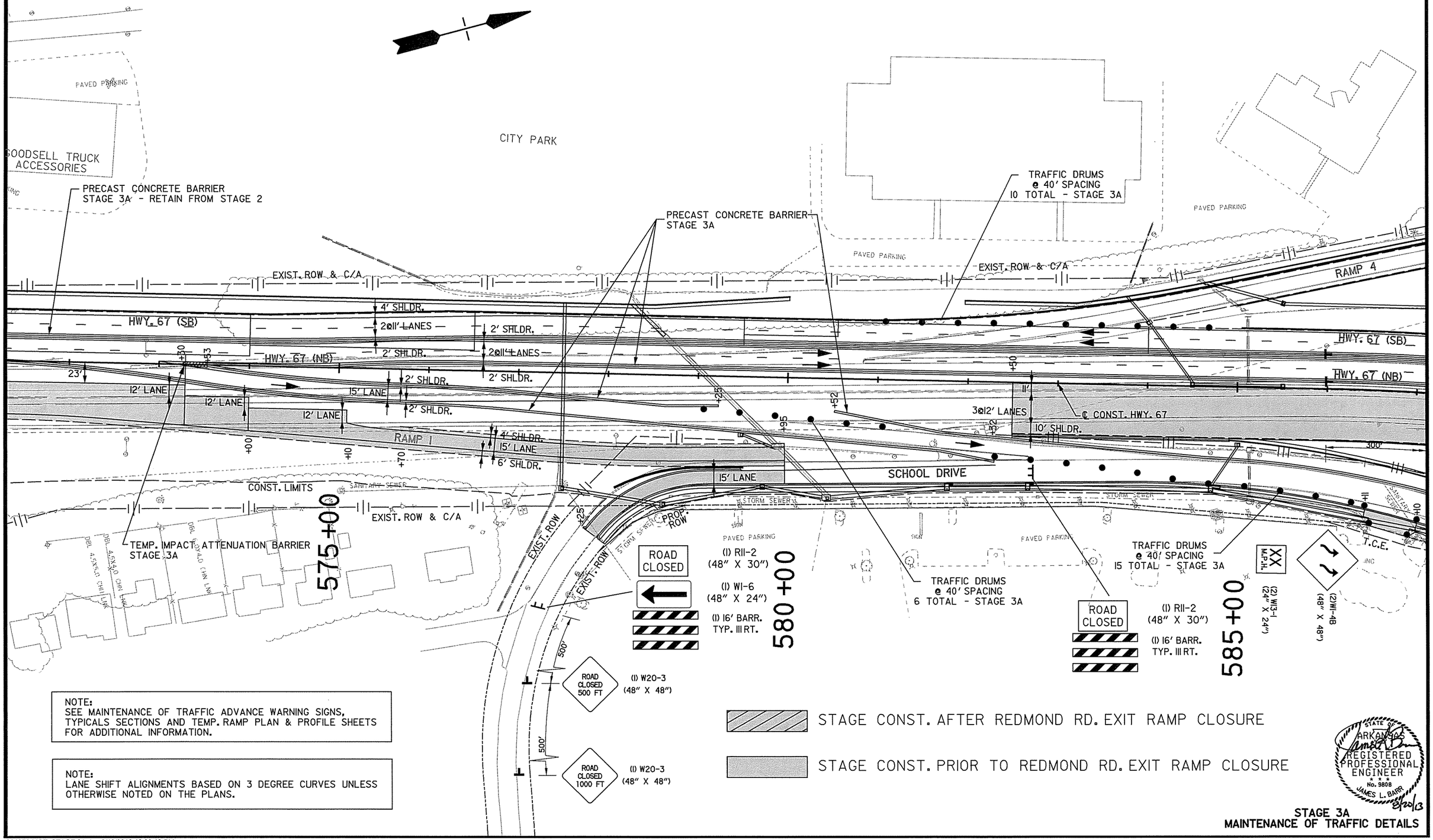

NOTE:
SEE MAINTENANCE OF TRAFFIC ADVANCE WARNING SIGNS, TYPICALS SECTIONS AND TEMP. RAMP PLAN & PROFILE SHEETS FOR ADDITIONAL INFORMATION.

NOTE:
LANE SHIFT ALIGNMENTS BASED ON 3 DEGREE CURVES UNLESS OTHERWISE NOTED ON THE PLANS.

STAGE CONST. AFTER REDMOND RD. EXIT RAMP CLOSURE

STAGE CONST. PRIOR TO REDMOND RD. EXIT RAMP CLOSURE

STATE OF ARKANSAS
REGISTERED PROFESSIONAL ENGINEER
No. 9808
JAMES L. BARR
8/20/13

STAGE 3A
MAINTENANCE OF TRAFFIC DETAILS

r061276.MOT_STAGE 3A.dgn 8/19/2013 12:06:12 PM

DATE REVISED	DATE FILMED	DATE REVISED	DATE FILMED

FED.RD. DIST.NO.	STATE	FED.AID PROJ.NO.	SHEET NO.	TOTAL SHEETS
6	ARK.			
JOB NO.		061276	89	438

(2) **MAINTENANCE OF TRAFFIC DETAILS**

MARSHALL RD.
EXIST. ROW
JOHN HARDEN DR.
PRECAST CONCRETE BARRIER STAGE 3A - RETAIN FROM STAGE 2
PROP. ROW & C/A
EXIST. C/A
PRECAST CONCRETE BARRIER STAGE 3A
PRECAST CONCRETE BARRIER STAGE 3A - RETAIN FROM STAGE 2
STA. 600+00.00 ℄ CONST. HWY. 67
END JOB 061276
(2)WI-4B (48" X 48")
(2) WI3-1 (24" X 24")
XX M.P.H.
TEMP. IMPACT ATTENUATION BARRIER STAGE 3A - RETAIN FROM STAGE 2
300'
PAVED PARKING
EXIST. ROW & C/A
℄ CONST. HWY. 67
+54
2' SHLDR.
2@11' LANES
4' SHLDR.
HWY. 67 (SB)
HWY. 67 (NB)
5.5'
11'
10' SHLDR.
3@12' LANES
2' SHLDR.
SANITARY SEWER
EXIST. C/A
TP WHITE DR.
595+00
590+00
600+00
605+00
EXIST. ROW
PAVED PARKING
STORM SEWER
W. MAIN ST. N.
W. MAIN ST. S.
(2)WI-4B (48" X 48")
6'
12' LANE
2@12' LANES

STAGE CONST. AFTER REDMOND RD. EXIT RAMP CLOSURE

STAGE CONST. PRIOR TO REDMOND RD. EXIT RAMP CLOSURE

NOTE:
SEE MAINTENANCE OF TRAFFIC ADVANCE WARNING SIGNS, TYPICALS SECTIONS AND TEMP. RAMP PLAN & PROFILE SHEETS FOR ADDITIONAL INFORMATION.

NOTE:
LANE SHIFT ALIGNMENTS BASED ON 3 DEGREE CURVES UNLESS OTHERWISE NOTED ON THE PLANS.

STATE OF ARKANSAS
REGISTERED PROFESSIONAL ENGINEER
No. 9808
JAMES L. BARR
8/22/13

STAGE 3A
MAINTENANCE OF TRAFFIC DETAILS

r061276.MOT STAGE 3A.dgn 8/19/2013 12:06:12 PM

DATE REVISED	DATE FILMED	DATE REVISED	DATE FILMED	FED.RD. DIST.NO.	STATE	FED.AID PROJ.NO.	SHEET NO.	TOTAL SHEETS
				6	ARK.			
				JOB NO.		061276	90	438

(2) **MAINTENANCE OF TRAFFIC DETAILS**

STAGE 3B CONST.

1. HWY. 67 SB TRAFFIC TRAVELING IN TEMP. LANES ON PROPOSED ROADWAY CONSTRUCTED IN STAGE IC.
2. HWY. 67 NB TRAFFIC TRAVELING IN TEMP. LANES ON PROPOSED ROADWAY CONSTRUCTED IN STAGE 2.
3. TRAFFIC FROM REDMOND ROAD WANTING TO TRAVEL SOUTH ON HWY. 67 WILL UTILIZE ENTRANCE RAMP CONSTRUCTED IN STAGE IB.
4. THE MAIN ST. ENTRANCE RAMP SHALL REMAIN CLOSED AND DETOUR SIGNING SHALL REMAIN IN PLACE.
5. REDMOND RD. EXIT RAMP SHALL BE OPEN TO TRAFFIC.
6. MAIN ST. EXIT RAMP IS TEMPORARILY CLOSED DURING CONSTRUCTION. TEMP. RAMP CONNECTION ISHALL BE REMOVED. - (PORTABLE CHANGEABLE MESSAGE SIGN AS DIRECTED BY THE ENGINEER.)
7. PLACE PRECAST BARRIER WALL AND CONSTRUCT SHADED AREAS SHOWN IN PLANS.

STAGE 3B - REMOVAL OF PERMANENT PAVEMENT MARKINGS

C.L. CONST. HWY 67 RT. STA. 525+00.00 TO STA. 528+00.00 = 300 LIN. FT.

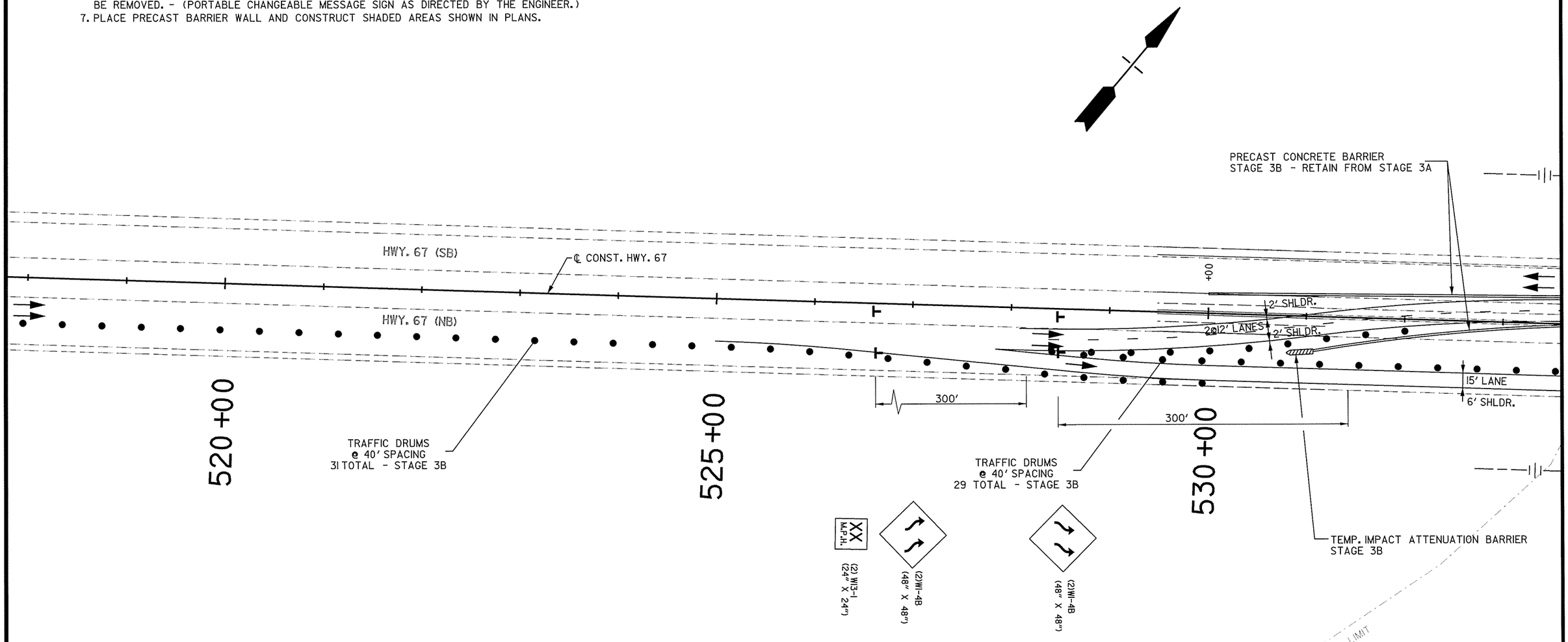

STAGE 3B - REMOVABLE CONSTRUCTION PAVEMENT MARKINGS

REDMOND RD. RAMP EXIT
4" SOLID WHITE C.L. CONST. HWY. 67 RT. STA. 525+00.00 TO STA. 530+00.00 = 500 LIN. FT.
4" SOLID YELLOW C.L. CONST. HWY. 67 RT. STA. 527+85.00 TO STA. 558+50.00 = 3065 LIN. FT.

NOTE:
SEE MAINTENANCE OF TRAFFIC ADVANCE WARNING SIGNS, TYPICALS SECTIONS AND TEMP. RAMP PLAN & PROFILE SHEETS FOR ADDITIONAL INFORMATION.

STATE OF ARKANSAS
REGISTERED PROFESSIONAL ENGINEER
No. 14517
PAUL ROBBINS
8-26-13

STAGE 3B
MAINTENANCE OF TRAFFIC DETAILS

DATE REVISED	DATE FILMED	DATE REVISED	DATE FILMED

FED.RD. DIST.NO.	STATE	FED.AID PROJ.NO.	SHEET NO.	TOTAL SHEETS
6	ARK.			
JOB NO.		061276	91	438

(2) **MAINTENANCE OF TRAFFIC DETAILS**

STA. 534+00.00 ℄ CONST. HWY. 67
BEGIN JOB 061276

FLOOD PLAIN LIMIT

EXIST. ROW & C/A

PRECAST CONCRETE BARRIER
STAGE 3B - RETAIN FROM STAGE 3A

HWY. 67 (SB)

HWY. 67 (NB)

N 51°51'35" E

10' SHLDR.
14' LANE
11' LANE
2' SHLDR.

2' SHLDR.
2@11' LANES
2' SHLDR.

℄ CONST. HWY. 67

15' LANE
6' SHLDR.

OKLAHOMA ELECTRIC

530+00

535+00

540+00

545+00

TRAFFIC DRUMS
@ 40' SPACING
29 TOTAL - STAGE 3B

BILLBOARD

EXIST. ROW & C/A

FLOOD PLAIN LIMIT

NOTE:
SEE MAINTENANCE OF TRAFFIC ADVANCE WARNING SIGNS, TYPICALS SECTIONS AND TEMP. RAMP PLAN & PROFILE SHEETS FOR ADDITIONAL INFORMATION.

STATE OF ARKANSAS
REGISTERED PROFESSIONAL ENGINEER
No. 9808
JAMES L. BARR
8/20/13

STAGE 3B
MAINTENANCE OF TRAFFIC DETAILS

r061276.MOT_STAGE 3B.dgn 8/19/2013 12:06:13 PM

DATE REVISED	DATE FILMED	DATE REVISED	DATE FILMED	FED.RD. DIST.NO.	STATE	FED.AID PROJ.NO.	SHEET NO.	TOTAL SHEETS
				6	ARK.			
				JOB NO.		061276	92	438

(2) MAINTENANCE OF TRAFFIC DETAILS

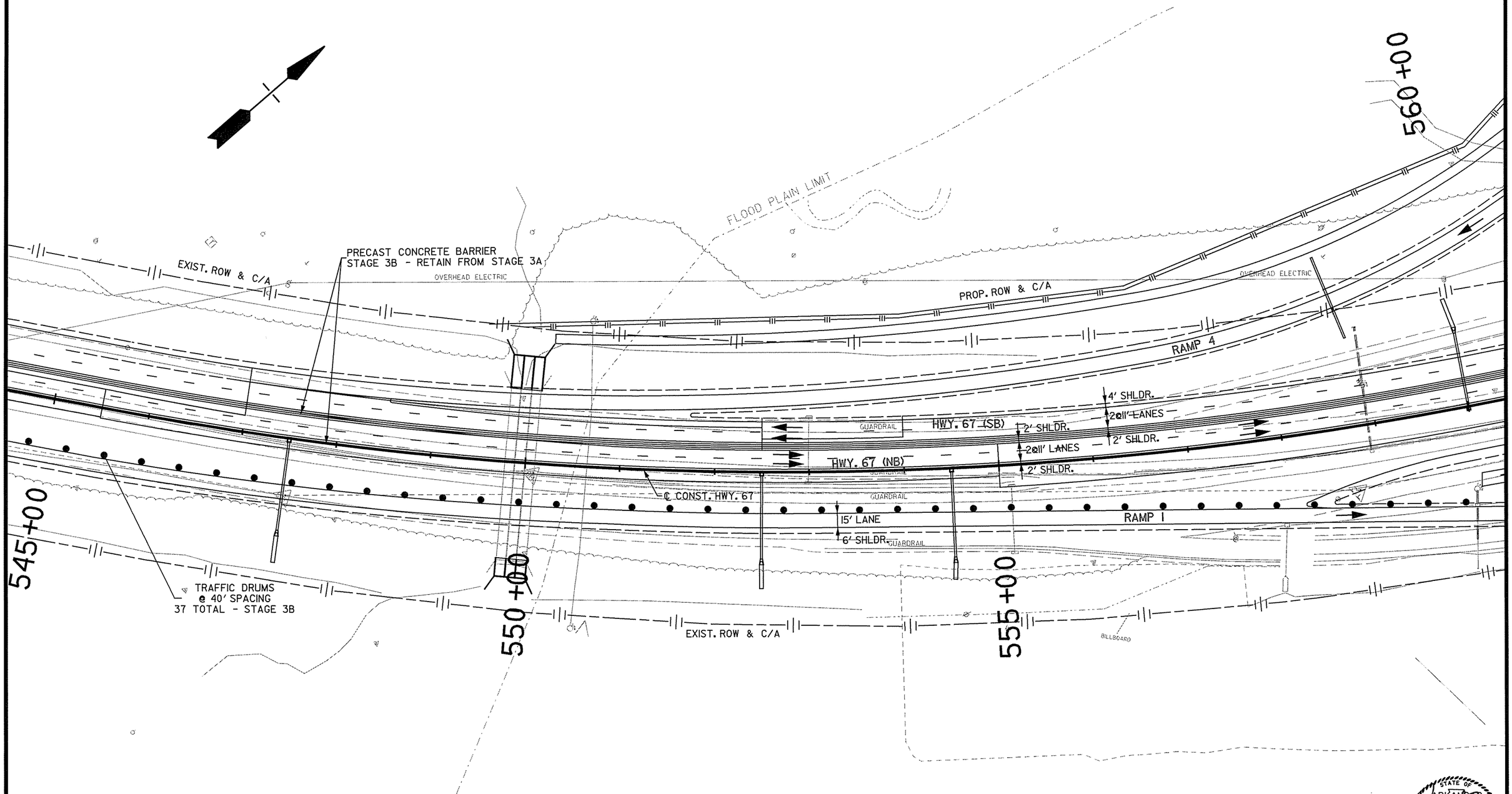

NOTE:
SEE MAINTENANCE OF TRAFFIC ADVANCE WARNING SIGNS, TYPICALS SECTIONS AND TEMP. RAMP PLAN & PROFILE SHEETS FOR ADDITIONAL INFORMATION.

STATE OF ARKANSAS
REGISTERED PROFESSIONAL ENGINEER
No. 9808
JAMES L. BARR
8/20/13

STAGE 3B
MAINTENANCE OF TRAFFIC DETAILS

r061276.MOT STAGE 3B.dgn 8/19/2013 12:06:13 PM

DATE REVISED	DATE FILMED	DATE REVISED	DATE FILMED	FED.RD. DIST.NO.	STATE	FED.AID PROJ.NO.	SHEET NO.	TOTAL SHEETS
				6	ARK.			
				JOB NO.		061276	93	438

(2) MAINTENANCE OF TRAFFIC DETAILS

STAGE 3B - FURNISHING AND INSTALLING PRECAST CONCRETE BARRIER

℄ CONST. HWY. 67 RT. OF R.M.L. STA. 570+83.73 TO STA. 573+53.86 = 270 LIN. FT.

(1) RII-2 (48" X 30")

(1) 16' BARR. TYP. III LT.

ROAD CLOSED

ROAD CLOSED

(1) RII-2 (48" X 30")

(1) 16' BARR. TYP. III RT.

560+00

565+00

570+00

35+00

40+00

PROP. ROW & C/A

RAMP 4

RAMP 1

REDMOND ROAD

RAILROAD

PROP. ROW

MUNICIPAL DR.

PARKING

PAVED PARKING

GOODSELL TRUCK ACCESSORIES

PRECAST CONCRETE BARRIER STAGE 3B - RETAIN FROM STAGE 3A

PRECAST CONCRETE BARRIER STAGE 3B

EXIST. ROW & C/A

OVERHEAD ELECTRIC

4' SHLDR.

2@11' LANES

2' SHLDR.

2' SHLDR.

2@11' LANES

2' SHLDR.

HWY. 67 (SB)

HWY. 67 (NB)

WATER LINE

SANITARY SEWER

DBL. 4.5X4.0

DBL. 6.0X4.0

+83

℄ CONST. HWY. 67

STAGE CONST.

NOTE:
SEE MAINTENANCE OF TRAFFIC ADVANCE WARNING SIGNS, TYPICALS SECTIONS AND TEMP. RAMP PLAN & PROFILE SHEETS FOR ADDITIONAL INFORMATION.

STATE OF ARKANSAS
REGISTERED PROFESSIONAL ENGINEER
No. 9808
JAMES L. BARR
8/22/13

STAGE 3B
MAINTENANCE OF TRAFFIC DETAILS

r061276.MOT STAGE 3B.dgn 8/19/2013 12:06:14 PM

DATE REVISED	DATE FILMED	DATE REVISED	DATE FILMED	FED.RD. DIST.NO.	STATE	FED.AID PROJ.NO.	SHEET NO.	TOTAL SHEETS
				6	ARK.			
				JOB NO.		061276	94	438

(2) MAINTENANCE OF TRAFFIC DETAILS

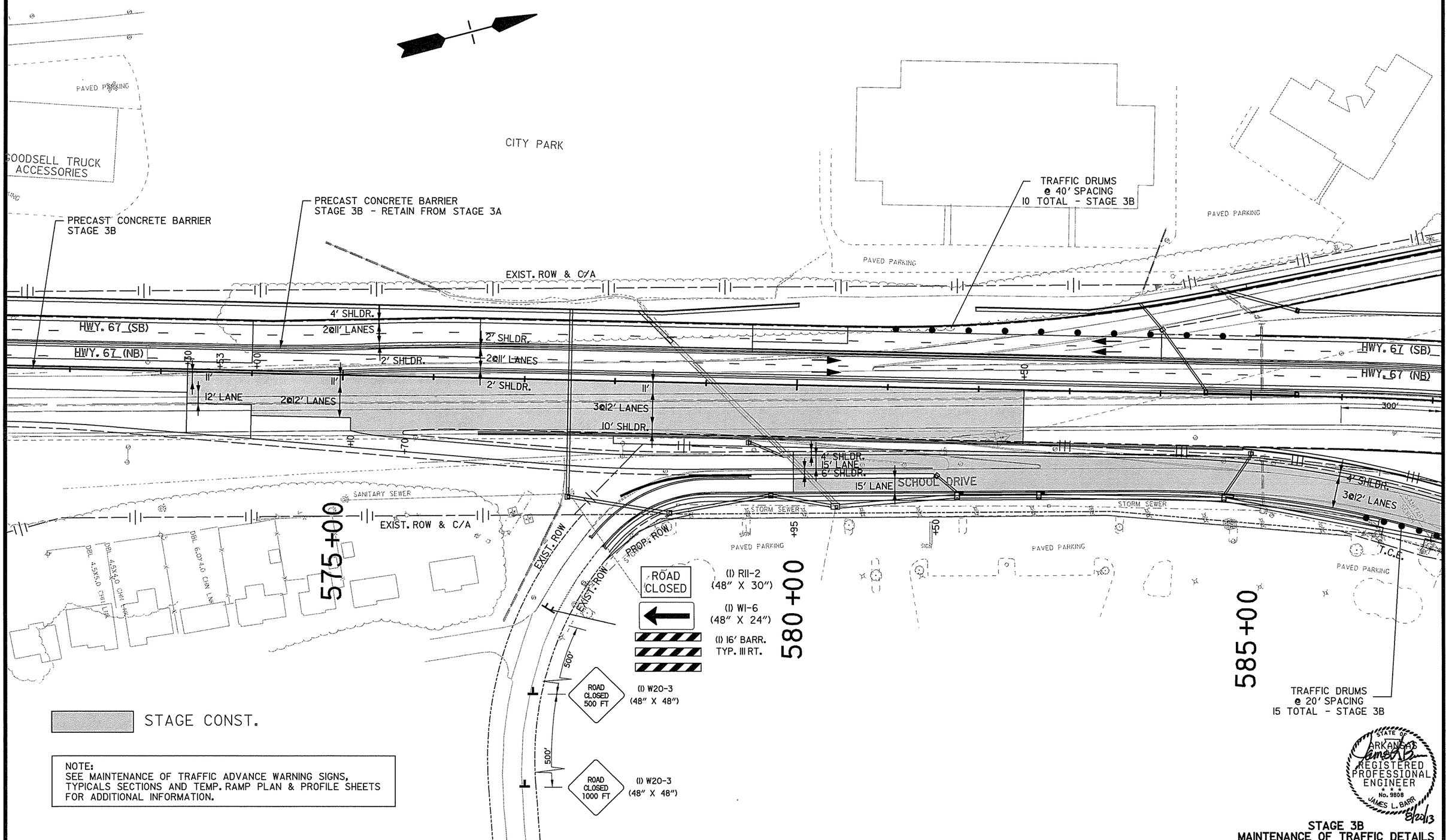

NOTE:
SEE MAINTENANCE OF TRAFFIC ADVANCE WARNING SIGNS, TYPICALS SECTIONS AND TEMP. RAMP PLAN & PROFILE SHEETS FOR ADDITIONAL INFORMATION.

STATE OF ARKANSAS
REGISTERED PROFESSIONAL ENGINEER
No. 9808
JAMES L. BARR
8/20/13

STAGE 3B
MAINTENANCE OF TRAFFIC DETAILS

r061276.MOT_STAGE 3B.dgn 8/19/2013 12:06:14 PM

DATE REVISED	DATE FILMED	DATE REVISED	DATE FILMED	FED.RD. DIST.NO.	STATE	FED.AID PROJ.NO.	SHEET NO.	TOTAL SHEETS
				6	ARK.			
				JOB NO.		061276	95	438
				(2)	MAINTENANCE OF TRAFFIC DETAILS			

MARSHALL RD.
SANITARY SEWER
JOHN HARDEN DR.
PROP. ROW & C/A
EXIST. ROW & C/A
PAVED PARKING
2' SHLDR.
2@11' LANES
4' SHLDR.
2@11' LANES
2' SHLDR.
HWY. 67 (SB)
HWY. 67 (NB)
RETAINING WALL
PRECAST CONCRETE BARRIER
STAGE 3B - RETAIN FROM STAGE 3A
(2)W1-4B (48" X 48")
(2) W13-1 (24" X 24")
XX M.P.H.
STA. 600+00.00 ℄ CONST. HWY. 67
END JOB 061276
TEMP. IMPACT ATTENUATION BARRIER
STAGE 3B- RETAIN FROM STAGE 3A
TP WHITE DR.
300'
EXIST ROW.
PARKING
590+00
595+00
600+00
605+00
W. MAIN ST. N.
W. MAIN ST. S.
STORM SEWER
(2) W13-1 (24" X 24")
(2) W1-4B (48" X 48")

NOTE:
SEE MAINTENANCE OF TRAFFIC ADVANCE WARNING SIGNS, TYPICALS SECTIONS AND TEMP. RAMP PLAN & PROFILE SHEETS FOR ADDITIONAL INFORMATION.

NOTE:
LANE SHIFT ALIGNMENTS BASED ON 3 DEGREE CURVES UNLESS OTHERWISE NOTED ON THE PLANS.

STATE OF ARKANSAS
REGISTERED PROFESSIONAL ENGINEER
No. 9808
JAMES L. BARR
8/22/13

STAGE 3B
MAINTENANCE OF TRAFFIC DETAILS

r061276.MOT_STAGE 3B.dgn 8/19/2013 12:06:14 PM

DATE REVISED	DATE FILMED	DATE REVISED	DATE FILMED	FED.RD. DIST.NO.	STATE	FED.AID PROJ.NO.	SHEET NO.	TOTAL SHEETS
				6	ARK.			
				JOB NO.		061276	96	438

(2) MAINTENANCE OF TRAFFIC DETAILS

STAGE 3C CONST.

1. HWY. 67 SB TRAFFIC TRAVELING IN PROP. LANES WITH MAIN ST. ENTRANCE RAMP OPEN TO TRAFFIC.
2. HWY. 67 NB TRAFFIC TRAVELING IN PROP. & TEMP. LANES.
3. RELOCATE PRECAST CONC. BARRIER AND CONSTRUCT SHADED AREAS SHOWN IN PLANS.
4. CONSTRUCT CONC. BARRIER (MEDIAN TYPE A).
5. PLACE TRAFFIC ON FINAL PAVEMENT.

STAGE 3C - RELOCATING PRECAST CONCRETE BARRIER

℄ CONST. HWY. 67 LT. STA. 533+59.89 TO STA. 606+00.00 = 7015 LIN. FT.
℄ CONST. HWY. 67 RT. STA. 533+59.89 TO STA. 605+28.94 = 7175 LIN. FT.

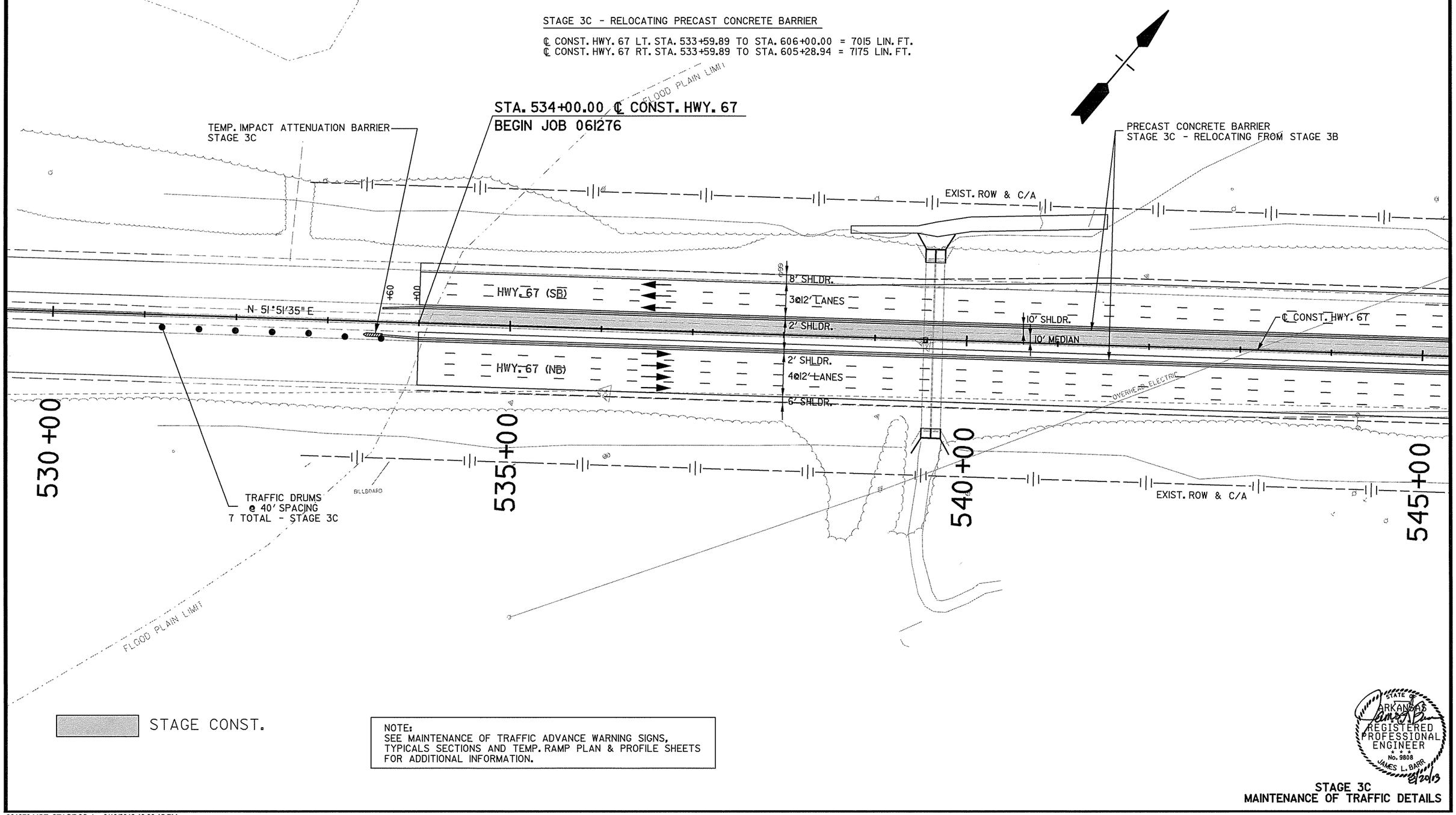

STAGE CONST.

NOTE:
SEE MAINTENANCE OF TRAFFIC ADVANCE WARNING SIGNS, TYPICALS SECTIONS AND TEMP. RAMP PLAN & PROFILE SHEETS FOR ADDITIONAL INFORMATION.

STATE OF ARKANSAS
REGISTERED PROFESSIONAL ENGINEER
No. 9808
JAMES L. BARR
8/20/13

STAGE 3C
MAINTENANCE OF TRAFFIC DETAILS

r061276.MOT STAGE 3C.dgn 8/19/2013 12:06:15 PM

DATE REVISED	DATE FILMED	DATE REVISED	DATE FILMED	FED.RD. DIST.NO.	STATE	FED.AID PROJ.NO.	SHEET NO.	TOTAL SHEETS
				6	ARK.			
				JOB NO.		061276	97	438
				(2)	MAINTENANCE OF TRAFFIC DETAILS			

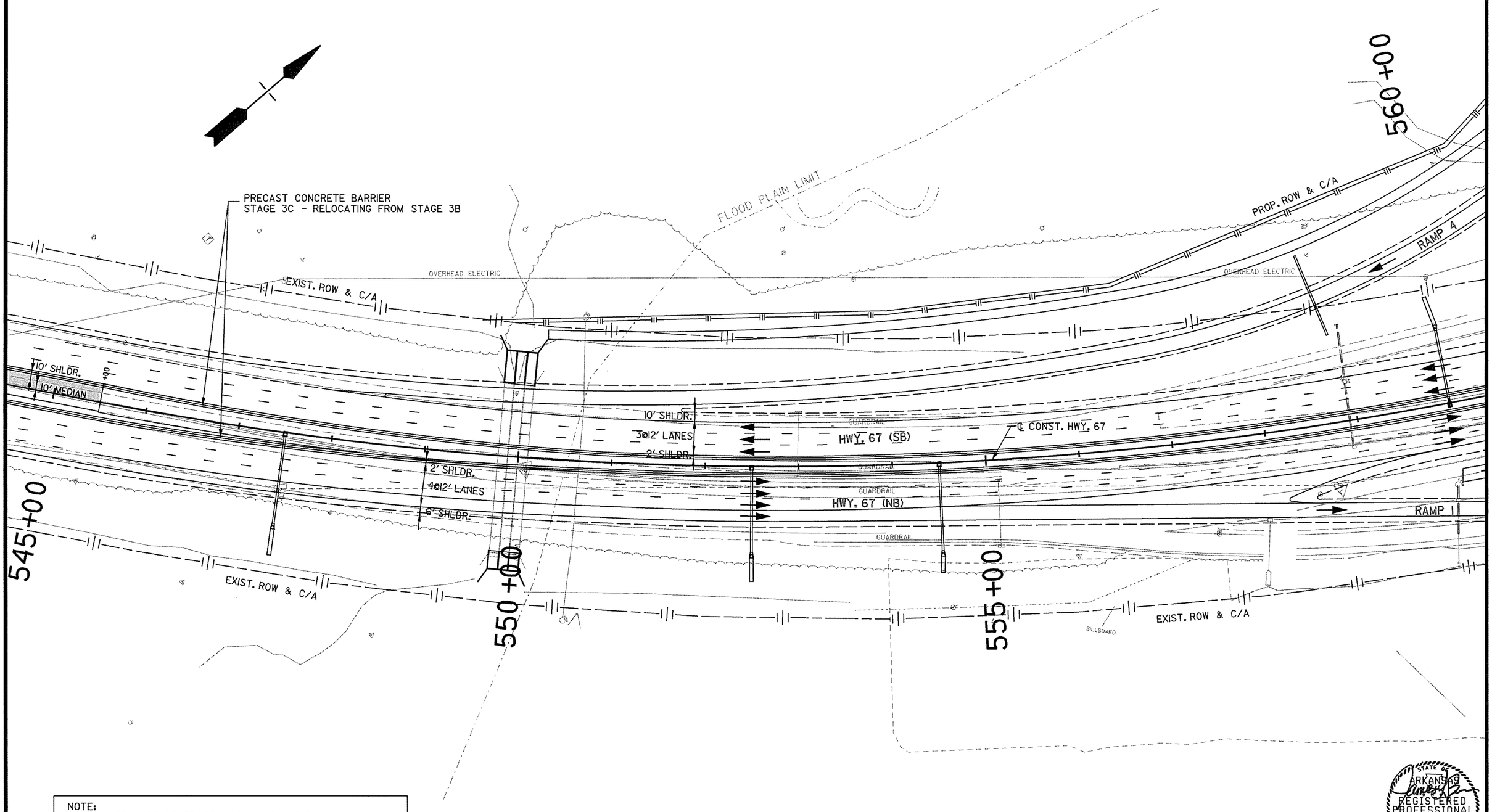

NOTE:
SEE MAINTENANCE OF TRAFFIC ADVANCE WARNING SIGNS, TYPICALS SECTIONS AND TEMP. RAMP PLAN & PROFILE SHEETS FOR ADDITIONAL INFORMATION.

STATE OF ARKANSAS
REGISTERED PROFESSIONAL ENGINEER
No. 9808
JAMES L. BARR
8/21/13

STAGE 3C
MAINTENANCE OF TRAFFIC DETAILS

r061276 MOT_STAGE 3C.dgn 8/19/2013 12:06:15 PM

DATE REVISED	DATE FILMED	DATE REVISED	DATE FILMED	FED.RD. DIST.NO.	STATE	FED.AID PROJ.NO.	SHEET NO.	TOTAL SHEETS
				6	ARK.			
				JOB NO.		061276	98	438

(2) MAINTENANCE OF TRAFFIC DETAILS

35+00

560+00

PROP. ROW & C/A

RAMP 4

PRECAST CONCRETE BARRIER
STAGE 3C - RELOCATING FROM STAGE 3B

OVERHEAD ELECTRIC

REDMOND ROAD

WATER LINE

RAILROAD

PARKING

MUNICIPAL DR.

PAVED PARKING

GOODSELL TRUCK ACCESSORIES

EXIST. ROW & C/A

HWY. 67 (SB)

HWY. 67 (NB)

40+00

10' SHLDR.
3@12' LANES
2' SHLDR.

2' SHLDR.
4@12' LANES
6' SHLDR.

℄ CONST. HWY. 67

RAMP 1

SANITARY SEWER

CONC

565+00

PROP. ROW

570+00

DBL 6.0X4.0

DBL 4.5X4.0

DBL 4.5X5.0 CMP

NOTE:
SEE MAINTENANCE OF TRAFFIC ADVANCE WARNING SIGNS, TYPICALS SECTIONS AND TEMP. RAMP PLAN & PROFILE SHEETS FOR ADDITIONAL INFORMATION.

STATE OF ARKANSAS
REGISTERED PROFESSIONAL ENGINEER
No. 9808
JAMES L. BARR

MAINTENANCE OF TRAFFIC DETAILS
STAGE 3C

r061276.MOT_STAGE 3C.dgn 8/19/2013 12:06:15 PM

DATE REVISED	DATE FILMED	DATE REVISED	DATE FILMED	FED.RD. DIST.NO.	STATE	FED.AID PROJ.NO.	SHEET NO.	TOTAL SHEETS
				6	ARK.			
				JOB NO.		061276	99	438

(2) MAINTENANCE OF TRAFFIC DETAILS

STAGE 3C - REMOVABLE CONSTRUCTION PAVEMENT MARKINGS

SB HWY. 67
4" SKIP WHITE C.L. CONST. HWY. 67 LT. STA. 577+00.00 TO STA. 600+00.00 = 850 LIN. FT.
4" SOLID WHITE C.L. CONST. HWY. 67 LT. STA. 577+00.00 TO STA. 600+00.00 = 2300 LIN. FT.
4" SOLID YELLOW C.L. CONST. HWY. 67 LT. STA. 577+00.00 TO STA. 600+00.00 = 2300 LIN. FT.

NB HWY. 67
4" SKIP WHITE C.L. CONST. HWY. 67 RT. STA. 577+00.00 TO STA. 604+21.08 = 774 LIN. FT.
4" SOLID WHITE C.L. CONST. HWY. 67 RT. STA. 577+00.00 TO STA. 604+22.23 = 2722 LIN. FT.
4" SOLID YELLOW C.L. CONST. HWY. 67 RT. STA. 577+00.00 TO STA. 604+21.08 = 2721 LIN. FT.

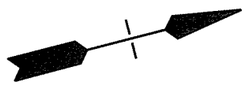

PAVED PARKING

GOODSELL TRUCK ACCESSORIES

PRECAST CONCRETE BARRIER
STAGE 3C - RELOCATING FROM STAGE 3B

CITY PARK

TRAFFIC DRUMS
@ 40' SPACING
13 TOTAL - STAGE 3C

PAVED PARKING

PAVED PARKING

EXIST. ROW & C/A

RAMP 4

HWY. 67 (SB)

HWY. 67 (NB)

℄ CONST. HWY. 67

4' SHLDR.
2@12' LANES
2' SHLDR.

HWY. 67 (SB)

2@12' LANES 2' SHLDR.

HWY. 67 (NB)

4' SHLDR.

SANITARY SEWER

EXIST. ROW & C/A

575+00

DBL 4.5X5.0 CHN LINK

DBL 4.5X4.0 CHN LINK

DBL 6.0'X4.0 CHN LINK

SCHOOL DRIVE

STORM SEWER

PROP. ROW

STORM SEWER

EXIST. ROW & C/A

SIGN

PAVED PARKING

SIGN

PAVED PARKING

T.C.E.

PAVED PARKING

EXIST. ROW

EXIST. ROW

SANITARY SEWER

580+00

TRAFFIC DRUMS
@ 40' SPACING
33 TOTAL - STAGE 3C

585+00

NOTE:
SEE MAINTENANCE OF TRAFFIC ADVANCE WARNING SIGNS, TYPICALS SECTIONS AND TEMP. RAMP PLAN & PROFILE SHEETS FOR ADDITIONAL INFORMATION.

STATE OF ARKANSAS
REGISTERED PROFESSIONAL ENGINEER
No. 9808
JAMES L. BARR
8/24/13

STAGE 3C
MAINTENANCE OF TRAFFIC DETAILS

r061276.MOT_STAGE 3C.dgn 8/19/2013 12:06:16 PM

DATE REVISED	DATE FILMED	DATE REVISED	DATE FILMED	FED.RD. DIST.NO.	STATE	FED.AID PROJ.NO.	SHEET NO.	TOTAL SHEETS
				6	ARK.			
				JOB NO.		061276	100	438

(2) MAINTENANCE OF TRAFFIC DETAILS

MARSHALL RD.
SANITARY SEWER
JOHN HARDEN DR.
PAVED PARKING
TRAFFIC DRUMS
@ 40' SPACING
29 TOTAL - STAGE 3C
PRECAST CONCRETE BARRIER
STAGE 3C - RELOCATING FROM STAGE 3B
PROP. ROW & C/A
EXIST. ROW & C/A
℄ CONST. HWY. 67
4' SHLDR.
2@12' LANES
2' SHLDR.
2' SHLDR.
2@11' LANES
4' SHLDR.
HWY. 67 (SB)
HWY. 67 (NB)
5.5'
12' LANE
12' LANE
5.5'
RETAINING WALL
BILLBOARD
EXIST. ROW
EXIST. C/A
TEMP. IMPACT ATTENUATION BARRIER
STAGE 3C
PAVED PARKING
STA. 600+00.00 ℄ CONST. HWY. 67
END JOB 061276
TP WHITE DR.
595+00
600+00
605+00
590+00
300'
PARKING
SEWER
STORM SEWER
W. MAIN ST. N.
W. MAIN ST. S.
RAW W.L.
WATER LINE
(2) W3-1 (24" X 24")
(2)W1-4B (48" X 48")
M.P.H.
XX

STAGE 3C - FURNISHING AND INSTALLING PRECAST CONCRETE BARRIER

℄ CONST. HWY. 67 RT. OF R.M.L. STA. 597+50.00 TO STA. 604+00.00 = 650 LIN. FT.

NOTE:
SEE MAINTENANCE OF TRAFFIC ADVANCE WARNING SIGNS, TYPICALS SECTIONS AND TEMP. RAMP PLAN & PROFILE SHEETS FOR ADDITIONAL INFORMATION.

NOTE:
LANE SHIFT ALIGNMENTS BASED ON 3 DEGREE CURVES UNLESS OTHERWISE NOTED ON THE PLANS.

STAGE CONST.

STATE OF ARKANSAS
REGISTERED PROFESSIONAL ENGINEER
No. 9808
JAMES L. BARR
8/21/13

STAGE 3C
MAINTENANCE OF TRAFFIC DETAILS

r061276.MOT_STAGE 3C.dgn 8/19/2013 12:06:16 PM

DATE REVISED	DATE FILMED	DATE REVISED	DATE FILMED	FED.RD. DIST.NO.	STATE	FED.AID PROJ.NO.	SHEET NO.	TOTAL SHEETS
				6	ARK.			
				JOB NO.		061276	101	438

(2) MAINTENANCE OF TRAFFIC DETAILS

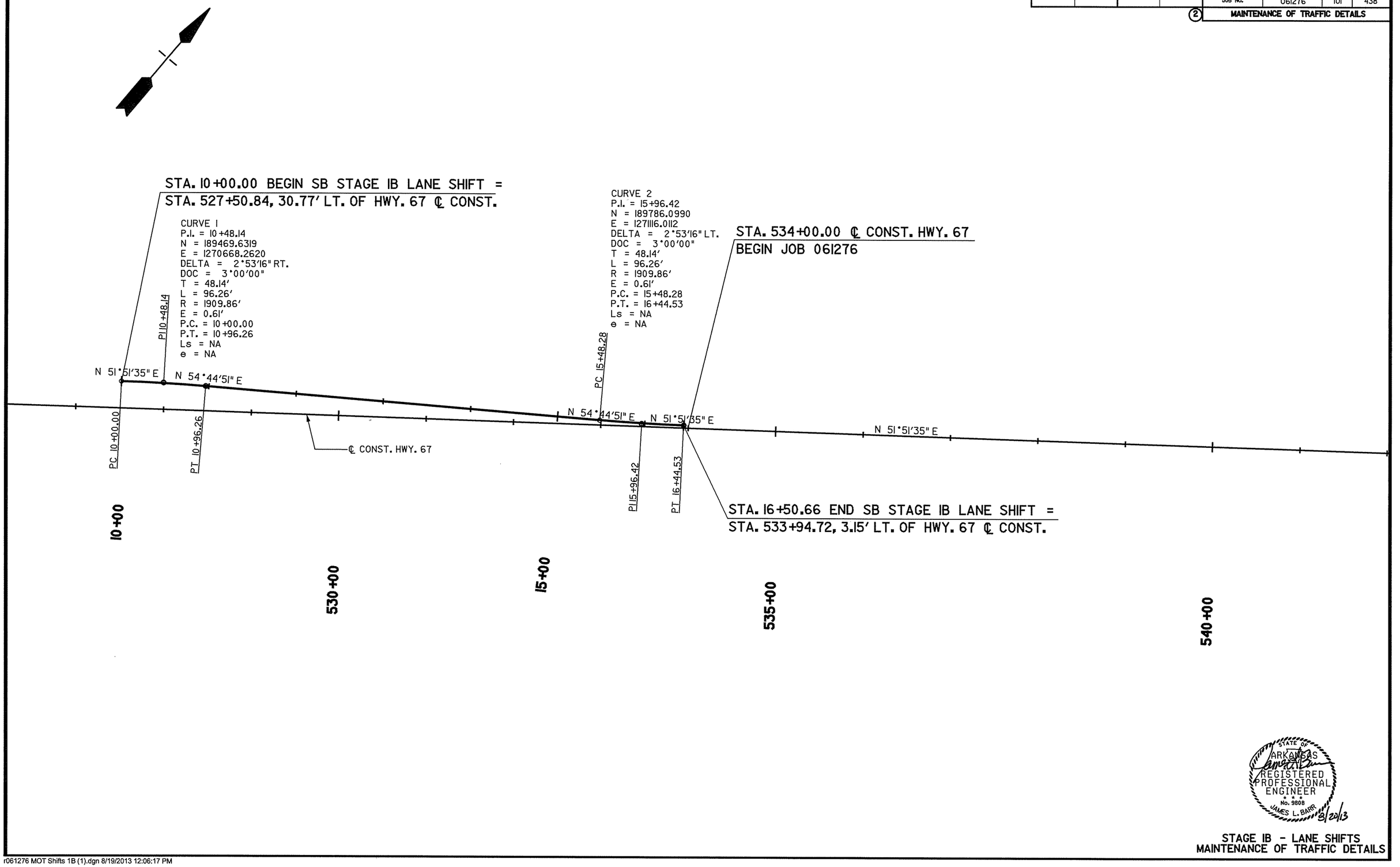

STATE OF ARKANSAS
REGISTERED PROFESSIONAL ENGINEER
No. 9808
JAMES L. BARR
8/20/13

STAGE IB - LANE SHIFTS
MAINTENANCE OF TRAFFIC DETAILS

r061276 MOT Shifts 1B (1).dgn 8/19/2013 12:06:17 PM

DATE REVISED	DATE FILMED	DATE REVISED	DATE FILMED	FED.RD. DIST.NO.	STATE	FED.AID PROJ.NO.	SHEET NO.	TOTAL SHEETS
				6	ARK.			
				JOB NO.		061276	102	438

(2) MAINTENANCE OF TRAFFIC DETAILS

CURVE 1
P.I. = 23+53.79
N = 194825.3192
E = 1274161.3132
DELTA = 20°59'23" RT.
DOC = 3°00'00"
T = 353.79'
L = 699.66'
R= 1909.86'
E= 32.49'
P.C. = 20+00.00
P.T. = 26+99.66
Ls = NA
e = NA

CURVE 2
P.I. = 29+51.22
N = 195225.6310
E = 1274615.4153
DELTA = 5°18'34" LT.
DOC = 5°43'46"
T = 46.37'
L = 92.67'
R= 1000.00'
E= 1.07'
P.C. = 29+04.85
P.T. = 29+97.52
Ls = NA
e = NA

CURVE 3
P.I. = 34+81.26
N = 195611.4732
E = 1274978.9244
DELTA = 3°27'54" RT.
DOC = 3°00'00"
T = 57.77'
L = 115.50'
R= 1909.86'
E= 0.87'
P.C. = 34+23.49
P.T. = 35+38.99
Ls = NA
e = NA

STA. 35+38.99 END SB STAGE IB LANE SHIFT =
STA. 606+00.00, 19.00' LT. OF HWY. 67 ℄ CONST.

STA. 600+00.00
℄ CONST. HWY. 67
END JOB 061276

STA. 20+00.00 BEGIN SB STAGE IB LANE SHIFT =
STA. 590+65.88, 19.00' LT. OF HWY. 67 ℄ CONST.

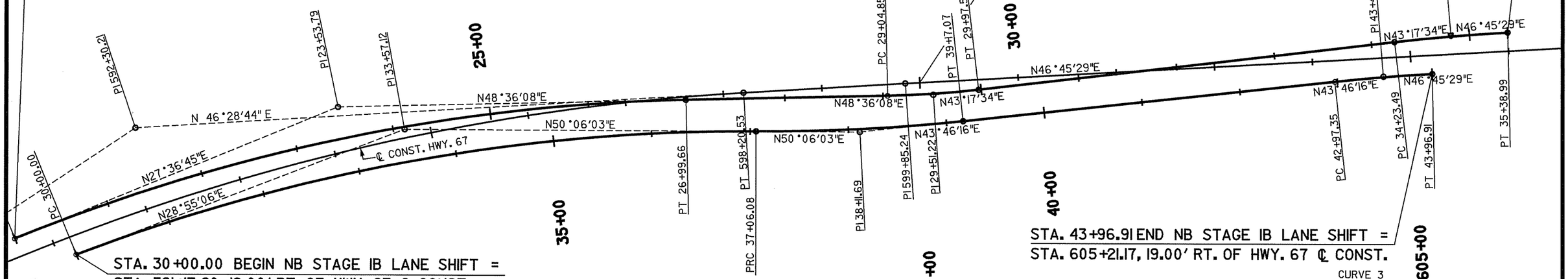

STA. 30+00.00 BEGIN NB STAGE IB LANE SHIFT =
STA. 591+17.20, 19.00' RT. OF HWY. 67 ℄ CONST.

CURVE 1
P.I. = 33+57.12
N = 194851.6308
E = 1274227.7883
DELTA = 21°10'57" RT.
DOC = 3°00'00"
T = 357.12'
L = 706.08'
R= 1909.86'
E= 33.10'
P.C. = 30+00.00
P.R.C. = 37+06.08
Ls = NA
e = NA

CURVE 2
P.I. = 38+11.69
N = 195148.4375
E = 1274582.7754
DELTA = 6°19'47" LT.
DOC = 3°00'00"
T = 105.60'
L = 210.99'
R= 1909.86'
E= 2.92'
P.R.C. = 37+06.08
P.T. = 39+17.07
Ls = NA
e = NA

STA. 43+96.91 END NB STAGE IB LANE SHIFT =
STA. 605+21.17, 19.00' RT. OF HWY. 67 ℄ CONST.

CURVE 3
P.I. = 43+47.14
N = 195535.2490
E = 1274953.3410
DELTA = 2°59'12" RT.
DOC = 3°00'00"
T = 49.79'
L = 99.56'
R= 1909.86'
E= 0.65'
P.C. = 42+97.35
P.T. = 43+96.91
Ls = NA
e = NA

STATE OF ARKANSAS
REGISTERED PROFESSIONAL ENGINEER
No. 9808
JAMES L. BARR
8/20/13

STAGE IB - LANE SHIFTS
MAINTENANCE OF TRAFFIC DETAILS

r061276 MOT Shifts 1B (2).dgn 8/19/2013 12:06:17 PM

DATE REVISED	DATE FILMED	DATE REVISED	DATE FILMED	FED.RD. DIST.NO.	STATE	FED.AID PROJ.NO.	SHEET NO.	TOTAL SHEETS
				6	ARK.			
				JOB NO.		061276	103	438

(2) MAINTENANCE OF TRAFFIC DETAILS

CURVE 1
P.I. = 83+31.56
N = 194991.7040
E = 1274256.6439
DELTA = 19°41'51" RT.
DOC = 3°00'00"
T = 331.56'
L = 656.58'
R = 1909.86'
E = 28.57'
P.C. = 80+00.00
P.R.C. = 86+56.58
Ls = NA
e = NA

CURVE 2
P.I. = 87+53.69
N = 195252.1914
E = 1274597.0938
DELTA = 5°49'17" LT.
DOC = 3°00'00"
T = 97.11'
L = 194.05'
R = 1909.86'
E = 2.47'
P.R.C. = 86+56.58
P.T. = 88+50.63
Ls = NA
e = NA

STA. 88+31.68 END SB STAGE 2 LANE SHIFT =
STA. 601+15.05, 18.86' LT. OF HWY. 67 ℄ CONST.

PI 83+31.56
PI 592+30.72
N 52°34'46" E
N 32°52'55" E
N46°28'44"E
N 52°34'46" E
N 46°45'29" E
℄ CONST. HWY. 67
N 46°45'29" E
PT 598+20.53
PRC 86+56.58
PI 87+53.69
PT 88+50.63
PI 599+85.24
PC 80+00.00

STA. 80+00.00 BEGIN SB STAGE 2 LANE SHIFT =
STA. 592+76.65, 52.00' LT. OF HWY. 67 ℄ CONST.

STA. 600+00.00
℄ CONST. HWY. 67
END JOB 061276

590+00
80+00
595+00
85+00
600+00
605+00

STATE OF ARKANSAS
REGISTERED PROFESSIONAL ENGINEER
No. 9808
JAMES L. BARR
8/24/13

STAGE 2 - LANE SHIFTS
MAINTENANCE OF TRAFFIC DETAILS

DATE REVISED	DATE FILMED	DATE REVISED	DATE FILMED	FED.RD. DIST.NO.	STATE	FED.AID PROJ.NO.	SHEET NO.	TOTAL SHEETS
				6	ARK.			
				JOB NO.		061276	104	438
				(2)	MAINTENANCE OF TRAFFIC DETAILS			

CURVE 1
P.I. = 91+48.65
N = 189518.2417
E = 1270831.8107
DELTA = 8°54'03" LT.
DOC = 3°00'00"
T = 148.65'
L = 296.70'
R= 1909.86'
E= 5.78'
P.C. = 90+00.00
P.R.C. = 92+96.70
Ls = NA
e = NA

CURVE 2
P.I. = 94+45.35
N = 189735.8171
E = 1271034.4108
DELTA = 8°54'03" RT.
DOC = 3°00'00"
T = 148.65'
L = 296.70'
R= 1909.86'
E= 5.78'
P.R.C. = 92+96.70
P.T. = 95+93.40
Ls = NA
e = NA

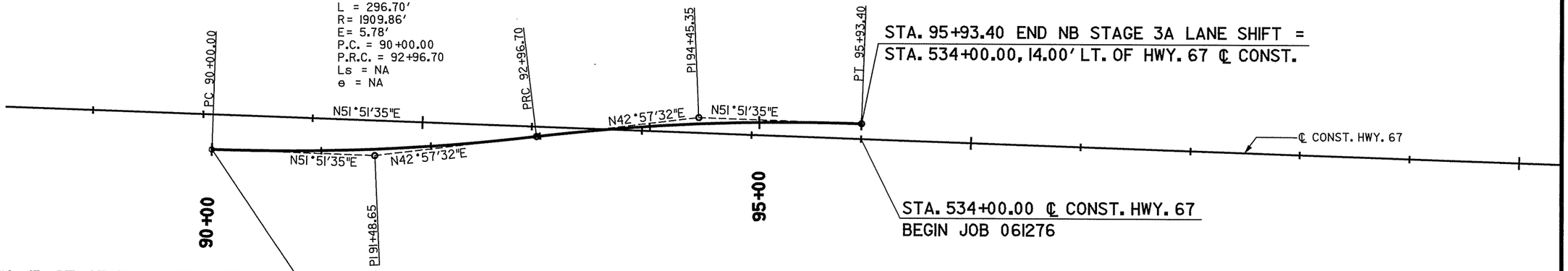

STA. 95+93.40 END NB STAGE 3A LANE SHIFT =
STA. 534+00.00, 14.00' LT. OF HWY. 67 ℄ CONST.

STA. 534+00.00 ℄ CONST. HWY. 67
BEGIN JOB 061276

STA. 90+00.00 BEGIN NB STAGE 3A LANE SHIFT =
STA. 528+08.99, 32.00' RT. OF HWY. 67 ℄ CONST.

STATE OF ARKANSAS
REGISTERED PROFESSIONAL ENGINEER
No. 9808
JAMES L. BARR
8/20/13

STAGE 3A - LANE SHIFTS
MAINTENANCE OF TRAFFIC DETAILS

r061276 MOT Shifts 3A (1).dgn 8/19/2013 12:06:17 PM

DATE REVISED	DATE FILMED	DATE REVISED	DATE FILMED

FED.RD. DIST.NO.	STATE	FED.AID PROJ.NO.	SHEET NO.	TOTAL SHEETS
6	ARK.			
JOB NO.		061276	105	438

(2) MAINTENANCE OF TRAFFIC DETAILS

CURVE 1
P.I. = 103+64.09
N = 194979.9115
E = 1274279.3415
DELTA = 21°35'10" RT.
DOC = 3°00'00"
T = 364.09'
L = 719.54'
R= 1909.86'
E= 34.39'
P.C. = 100+00.00
P.R.C. = 107+19.54
Ls = NA
e = NA

CURVE 2
P.I. = 108+35.77
N = 195264.1065
E = 1274666.5571
DELTA = 6°57'55" LT.
DOC = 3°00'00"
T = 116.23'
L = 232.18'
R= 1909.86'
E= 3.53'
P.R.C. = 107+19.54
P.T. = 109+51.72
Ls = NA
e = NA

STA. 109+51.72 END NB STAGE 3A LANE SHIFT =
STA. 601+92.94, 20.05' RT. OF HWY. 67 ℄ CONST.

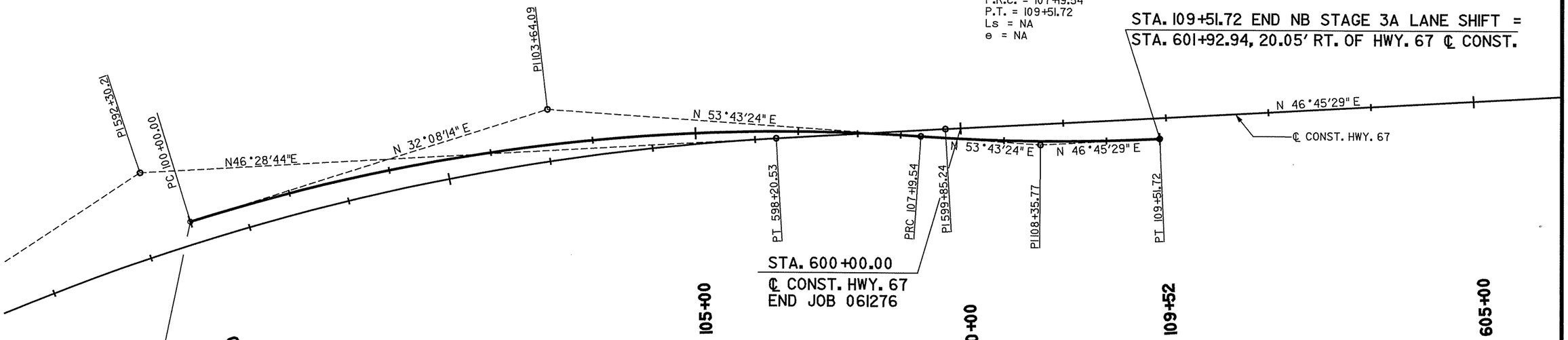

STA. 100+00.00 BEGIN NB STAGE 3A LANE SHIFT =
STA. 592+46.87, 22.00' LT. OF HWY. 67 ℄ CONST.

STATE OF ARKANSAS
REGISTERED PROFESSIONAL ENGINEER
No. 9808
JAMES L. BARR
8/20/13

STAGE 3A - LANE SHIFTS
MAINTENANCE OF TRAFFIC DETAILS

r061276 MOT Shifts 3A (2).dgn 8/19/2013 12:06:18 PM

DATE REVISED	DATE FILMED	DATE REVISED	DATE FILMED	FED.RD. DIST.NO.	STATE	FED.AID PROJ.NO.	SHEET NO.	TOTAL SHEETS
				6	ARK.			
				JOB NO.		061276	106	438

(2) MAINTENANCE OF TRAFFIC DETAILS

CURVE 1
P.I. = 143+26.80
N = 194985.8734
E = 1274255.0939
DELTA = 19°25'12" RT.
DOC = 3°00'00"
T = 326.80'
L = 647.34'
R = 1909.86'
E = 27.76'
P.C. = 140+00.00
P.R.C. = 146+47.34
Ls = NA
e = NA

CURVE 2
P.I. = 147+39.41
N = 195242.1548
E = 1274586.4215
DELTA = 5°31'13" LT.
DOC = 3°00'00"
T = 92.07'
L = 184.01'
R = 1909.86'
E = 2.22'
P.R.C. = 146+47.34
P.T. = 148+31.34
Ls = NA
e = NA

STA. 148+32.07 END SB STAGE 3B LANE SHIFT =
STA. 600+95.37, 18.86' LT. OF HWY. 67 ℄ CONST.

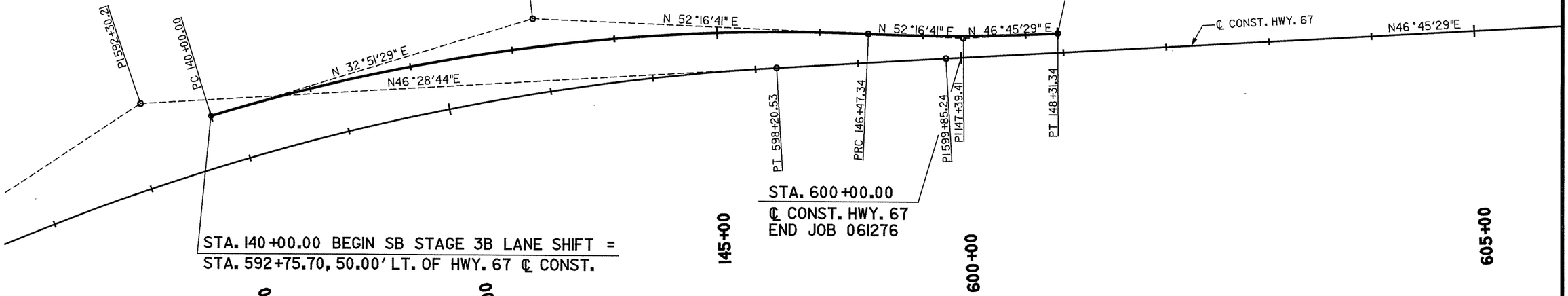

STATE OF ARKANSAS
REGISTERED PROFESSIONAL ENGINEER
No. 9808
JAMES L. BARR
8/20/13

STAGE 3B - LANE SHIFTS
MAINTENANCE OF TRAFFIC DETAILS

r061276 MOT Shifts 3B (1).dgn 8/19/2013 12:06:18 PM

DATE REVISED	DATE FILMED	DATE REVISED	DATE FILMED	FED.RD. DIST.NO.	STATE	FED.AID PROJ.NO.	SHEET NO.	TOTAL SHEETS
				6	ARK.			
				JOB NO.		061276	107	438
				(2)	MAINTENANCE OF TRAFFIC DETAILS			

CURVE 1
P.I. = 153+27.26
N = 194873.7177
E = 1274255.7241
DELTA = 19°26'49" RT.
DOC = 3°00'00"
T = 327.26'
L = 648.23'
R = 1909.86'
E = 27.84'
P.C. = 150+00.00
P.R.C. = 156+48.23
Ls = NA
e = NA

STA. 163+33.31 END NB STAGE 3C LANE SHIFT =
STA. 605+21.17, 19.00' RT. OF HWY. 67 ℄ CONST.

STA. 600+00.00
℄ CONST. HWY. 67
END JOB 061276

STA. 150+00.00 BEGIN NB STAGE 3C LANE SHIFT =
STA. 591+80.67, 23.00' RT. OF HWY. 67 ℄ CONST.

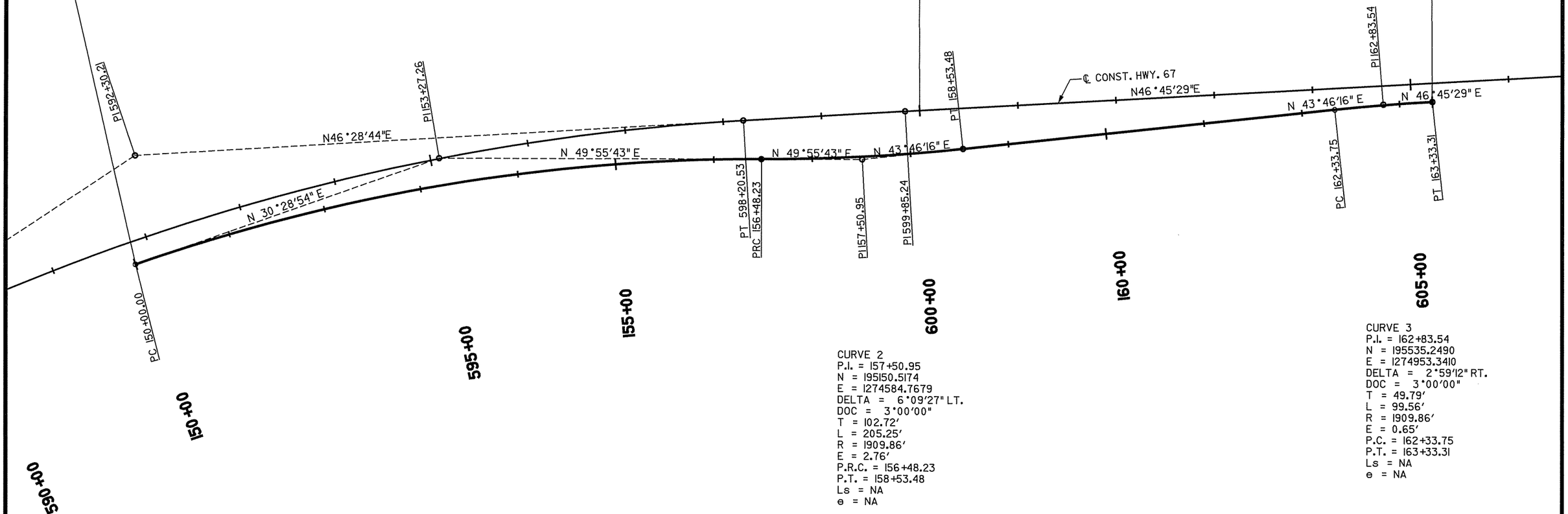

CURVE 2
P.I. = 157+50.95
N = 195150.5174
E = 1274584.7679
DELTA = 6°09'27" LT.
DOC = 3°00'00"
T = 102.72'
L = 205.25'
R = 1909.86'
E = 2.76'
P.R.C. = 156+48.23
P.T. = 158+53.48
Ls = NA
e = NA

CURVE 3
P.I. = 162+83.54
N = 195535.2490
E = 1274953.3410
DELTA = 2°59'12" RT.
DOC = 3°00'00"
T = 49.79'
L = 99.56'
R = 1909.86'
E = 0.65'
P.C. = 162+33.75
P.T. = 163+33.31
Ls = NA
e = NA

STATE OF ARKANSAS
REGISTERED PROFESSIONAL ENGINEER
No. 9808
JAMES L. BARR
8/20/13

STAGE 3C - LANE SHIFTS
MAINTENANCE OF TRAFFIC DETAILS

DATE REVISED	DATE FILMED	DATE REVISED	DATE FILMED	FED.RD. DIST.NO.	STATE	FED.AID PROJ.NO.	SHEET NO.	TOTAL SHEETS
				6	ARK.			
				JOB NO.		061276	108	438

② MAINTENANCE OF TRAFFIC DETAILS

℄ STAGE 2 TEMP. RAMP I CONN.
P.I. = 21+34.84
N = 192722.4177
E = 1273437.6825
DELTA = 8°04'38" RT.
DOC = 3°00'00"
T = 134.84'
L = 269.24'
E = 4.75'
P.C. = 20+00.00
P.R.C. = 22+69.24
Ls = NA
e = NA

℄ STAGE 2 TEMP. RAMP I CONN.
P.I. = 23+95.45
N = 192960.3075
E = 1273545.1835
DELTA = 7°33'42" LT.
DOC = 3°00'00"
T = 126.21'
L = 252.05'
E = 4.17'
P.R.C. = 22+69.24
P.R.C = 25+21.29
Ls = NA
e = NA

℄ STAGE 2 TEMP. RAMP I CONN.
P.I. = 25+84.33
N = 193141.5177
E = 1273599.7436
DELTA = 3°46'51" RT.
DOC = 3°00'00"
T = 63.04'
L = 126.03'
E = 1.04'
P.R.C. = 25+21.29
P.T. = 26+47.32
Ls = NA
e = NA

GOODSELL TRUCK ACCESSORIES
CITY PARK
PROP. ROW & C/A
+60.00 (PARKING)
155.00'
+90.66
107.77'
+91.37
82.78'
+70.81
106.34'
OVERHEAD ELECTRIC
EXIST. ROW
BEGIN EXIST. C/A
PI 21+34.84
PRC 25+21.29
PI 25+84.33
EXIST. ROW & C/A
PAVED PARKING
EXIST. ROW & C/A
RAMP 4
N 16°14'27" E
N 24°19'05" E
4' SHLDR.
15' LANE
4' SHLDR.
N 16°45'23" E
℄ CONST. HWY. 67
TEMP. RAMP I CONN.
FURNISHING AND INSTALLING PRECAST CONCRETE BARRIER
EXIST. C/A
BEGIN EXIST. C/A
EXIST. CONCRETE BARRIER WALL- IN PLACE RETAIN
N 20°32'14" E
SCHOOL DR.
20+00
PRC 22+69.24
PI 23+95.45
25+00
PT 26+47.32
30+00
SANITARY SEWER
STORM SEWER
EXIST. ROW & C/A
EXIST. ROW
PROP. ROW
PAVED PARKING
570+00
575+00
580+00
585+00
BEGIN CONSTRUCTION
TEMP. RAMP I CONN.
STA. 22+71.45
END CONSTRUCTION
TEMP. RAMP I CONN.
STA. 25+49.15
STAGE CONST.

P.V.I. 22+71.45
ELEV. 272.26'
P.V.I. 23+10.00
ELEV. 270.89'
P.V.C. 23+95.00
ELEV. 265.95'
V.C. = 150.00'
G1 = -5.80%
G2 = -2.92%
E = 0.54'
K = 52
(45 MPH)
P.V.T. 25+45.00
ELEV. 259.41'
P.V.I. 25+49.15
ELEV. 259.29'
MAIN LANES
-3.56%
FINISHED GRADE
-5.80%
-2.92%
P.V.C. 22+72.50
ELEV. 272.22'
V.C. = 75.00'
G1 = -3.56%
G2 = -5.80%
E = -0.21'
K = 33
(35 MPH)
P.V.T. 23+47.50
ELEV. 268.71'
P.V.I. 24+70.00
ELEV. 261.60'
EXISTING GROUND
285
280
275
270
265
260
255
250
245
20+00
21+00
22+00
23+00
24+00
25+00
26+00
27+00
28+00
29+00
30+00
31+00
32+00
33+00

STATE OF ARKANSAS
REGISTERED PROFESSIONAL ENGINEER
No. 9808
JAMES L. BARR
8/20/13

MAINTENANCE OF TRAFFIC DETAILS

r061276.plan Temp. Ramp 1 Conn.dgn 8/19/2013 12:06:19 PM

DATE REVISED	DATE FILMED	DATE REVISED	DATE FILMED

FED.RD. DIST.NO.	STATE	FED.AID PROJ.NO.	SHEET NO.	TOTAL SHEETS
6	ARK.			
JOB NO.		061276	109	438

(2) MAINTENANCE OF TRAFFIC DETAILS

STAGE CONST.

℄ CONST. STAGE IA
TEMP. RAMP 4 CONN.
P.I. = 14+56.23
N = 191580.1766
E = 1273033.0272
DELTA = 57°14'32" LT.
DOC = 3°01'23"(1)
DOC = 8°00'00"(2)
T = 456.23'(1) T = 393.07'(2)
L = 107.13'(1) L = 675.05'(2)
R = 1895.36'(1) R = 716.20'(2)
E = 54.14'
P.C.C. = 11+07.13
P.T. = 17+82.18
Ls = NA
e = NA

℄ CONST. STAGE IA
TEMP. RAMP 4 CONN.
P.I. = 21+16.61
N = 192268.3736
E = 1272797.1564
DELTA = 53°25'07" RT.
DOC = 12°30'00"
T = 230.63'
L = 427.35'
E = 54.75
P.C. = 18+85.98
P.T. = 17+82.18
Ls = NA
e = NA

+50.00
179.09'

PROP. ROW & C/A

PCC 11+07.13

+50.00
274.04'

PT 17+82.18

+00.00
480.00'

PROP. ROW & C/A

PI 21+16.61

+00.00
520.00'

PROP. ROW & C/A

N 34°30'00" E

N 18°55'07" W

6' SHLDR.
15' LANE
4' SHLDR.

20+00

15+00

CONST. LIMITS

TEMP. RAMP 4 CONN.

CONST. LIMITS

PC 18+85.98

END
EXIST. C/A

EXIST. ROW

REDMOND RD.

WATER LINE

RAILROAD

PROP. ROW & C/A

+20.28
165.00'

PROP. ROW & C/A

N 38°19'26" E

4' SHLDR.
15' LANE
4' SHLDR.

N 18°55'07" W

EXIST. ROW & C/A

OVERHEAD ELECTRIC

EXIST. ROW

OVERHEAD ELECTRIC

EXIST. ENT. RAMP

℄ CONST. HWY. 67

HWY. 67 (SB)

HWY. 67 (NB)

N 35°05'07" E

PI 14+56.23

EXIST. EXIT RAMP

BILLBOARD

MUNICIPAL DR.

PARKING

PAVED PARKING

PROP. ROW

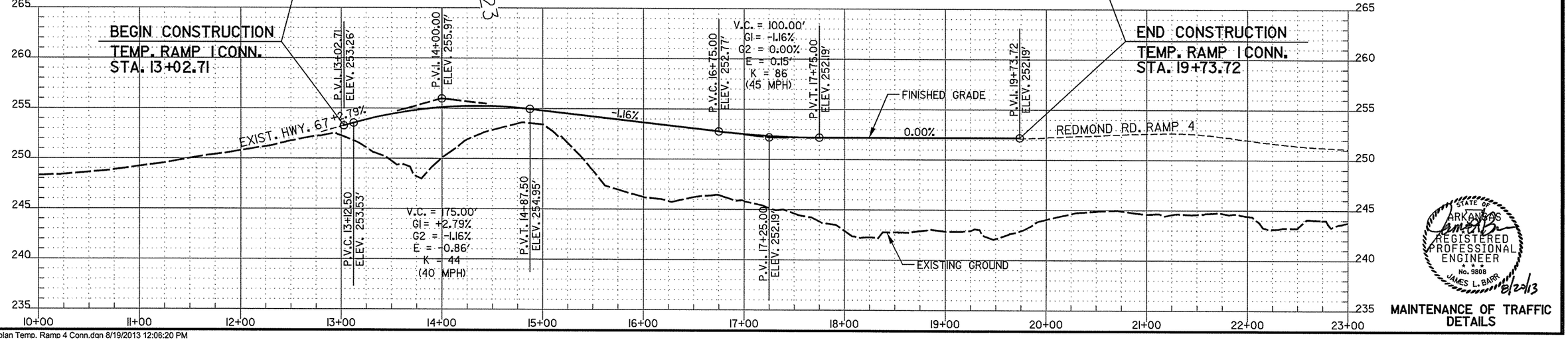

STATE OF ARKANSAS
JAMES L. BARR
REGISTERED PROFESSIONAL ENGINEER
No. 9808
8/22/13

MAINTENANCE OF TRAFFIC DETAILS

r061276.plan Temp. Ramp 4 Conn.dgn 8/19/2013 12:06:20 PM

DATE REVISED	DATE FILMED	DATE REVISED	DATE FILMED	FED.RD. DIST.NO.	STATE	FED. AID PROJ. NO.	SHEET NO.	TOTAL SHEETS
				6	ARK.			
				JOB NO.		061276	110	438

(2) **PAVEMENT MARKING DETAILS**

CONCRETE ROADWAY

SKIP LINE - CONTRAST PROFILE THERMO (ALT. NO. 1) OR HIGH PERFORMANCE CONTRAST MARKING TAPE (ALT. NO. 2)
EDGE LINES - PROFILE THERMO (ALT. NO. 1) OR HIGH PERFORMANCE MARKING TAPE (ALT. NO. 2)
REFER TO SPECIAL PROVISION - HIGH PERFORMANCE PAVEMENT MARKING

CONCRETE BRIDGE

SKIP LINE - CONTRAST PROFILE THERMO (ALT. NO. 1) OR HIGH PERFORMANCE CONTRAST MARKING TAPE (ALT. NO. 2)
EDGE LINES - PROFILE THERMO (ALT. NO. 1) OR HIGH PERFORMANCE MARKING TAPE (ALT. NO. 2)
REFER TO SPECIAL PROVISION - HIGH PERFORMANCE PAVEMENT MARKING

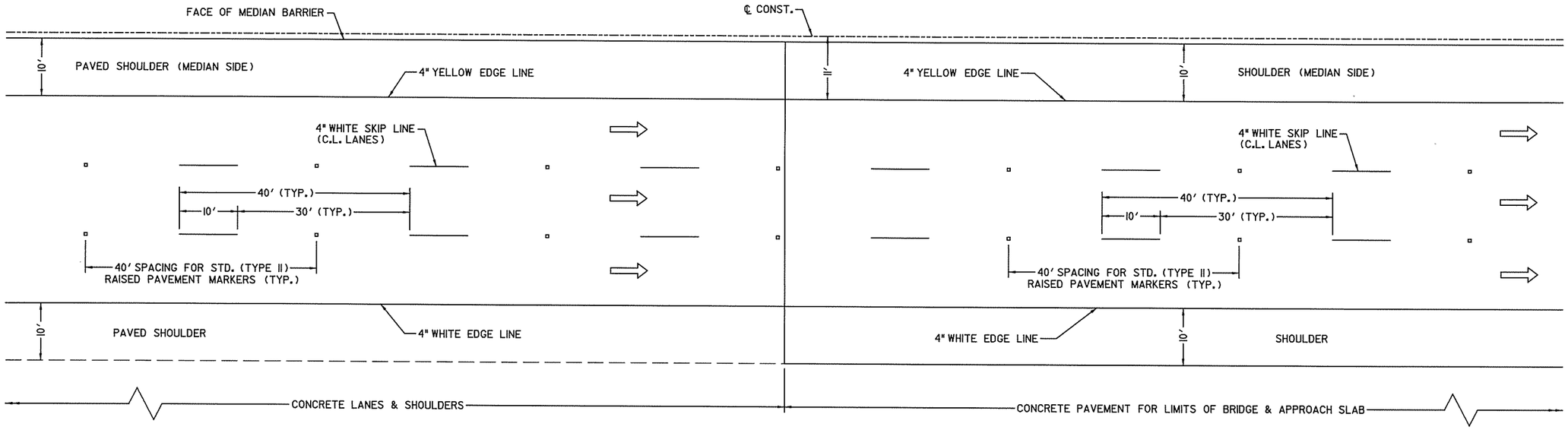

PERMANENT PAVEMENT MARKING DETAILS
NORTHBOUND HWY. 67 SHOWN ABOVE
(REVERSE FOR SOUTHBOUND HWY. 67)

SEE STANDARD DRAWINGS PM-1 AND PM-2
FOR ADDITIONAL INFORMATION

STATE OF ARKANSAS
REGISTERED PROFESSIONAL ENGINEER
No. 9808
JAMES L. BARR
8/20/13

PAVEMENT MARKING DETAILS

r061276.SP18.dgn 8/19/2013 12:06:20 PM

DATE REVISED	DATE FILMED	DATE REVISED	DATE FILMED

FED.RD. DIST.NO.	STATE	FED.AID PROJ.NO.	SHEET NO.	TOTAL SHEETS
6	ARK.			
JOB NO.		061276	III	438

(2) PAVEMENT MARKING DETAILS

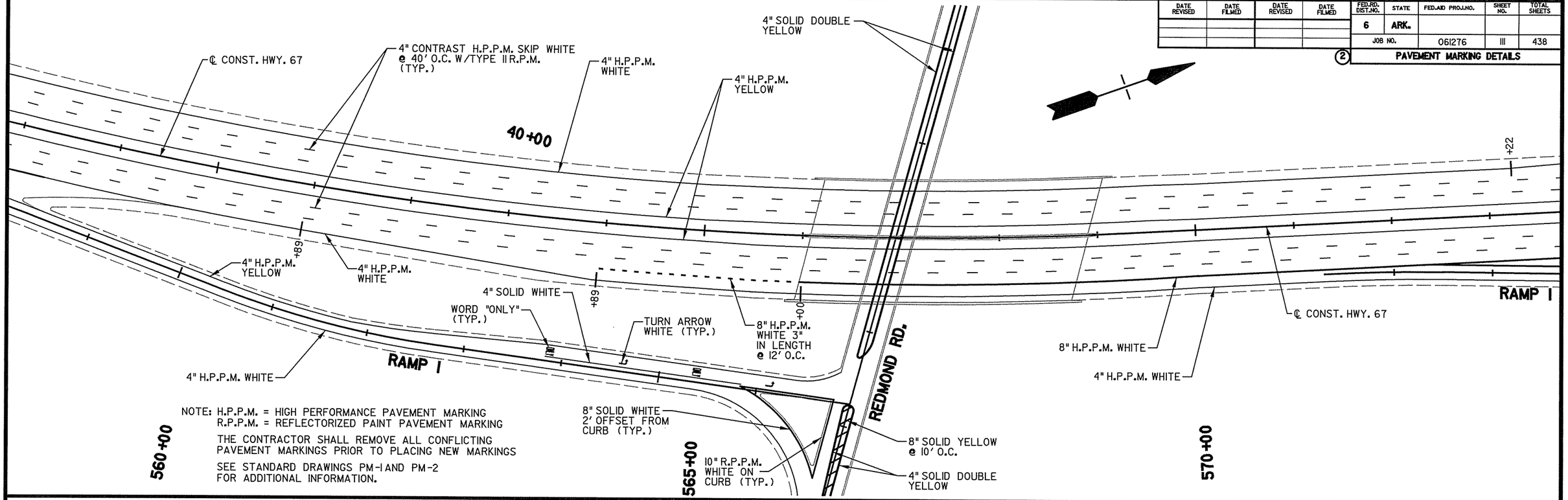

NOTE: H.P.P.M. = HIGH PERFORMANCE PAVEMENT MARKING
R.P.P.M. = REFLECTORIZED PAINT PAVEMENT MARKING

THE CONTRACTOR SHALL REMOVE ALL CONFLICTING PAVEMENT MARKINGS PRIOR TO PLACING NEW MARKINGS

SEE STANDARD DRAWINGS PM-I AND PM-2 FOR ADDITIONAL INFORMATION.

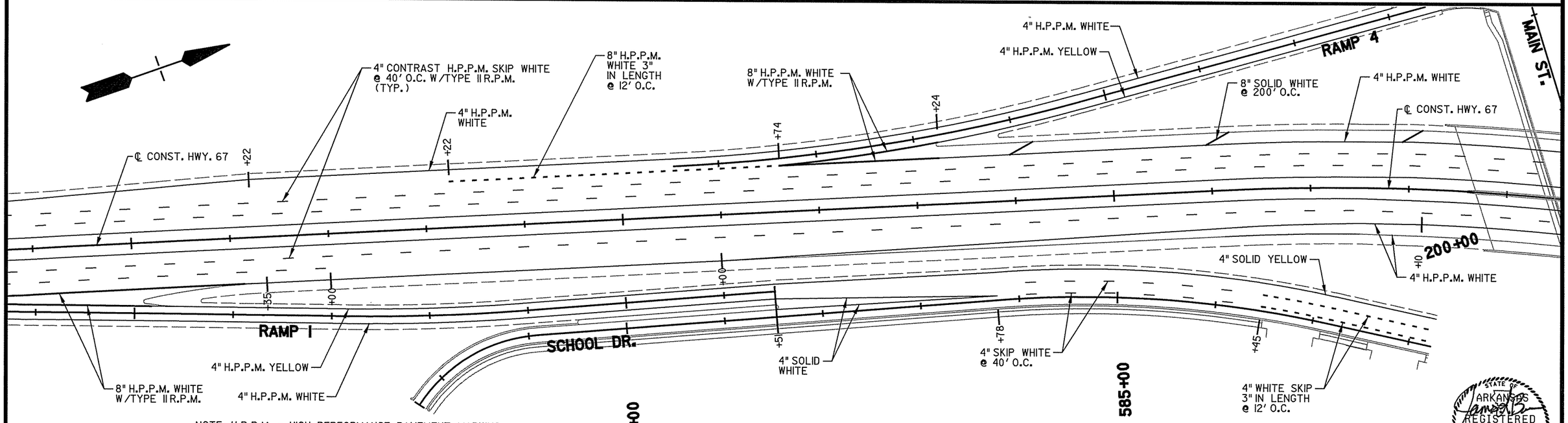

NOTE: H.P.P.M. = HIGH PERFORMANCE PAVEMENT MARKING
R.P.P.M. = REFLECTORIZED PAINT PAVEMENT MARKING

THE CONTRACTOR SHALL REMOVE ALL CONFLICTING PAVEMENT MARKINGS PRIOR TO PLACING NEW MARKINGS

SEE STANDARD DRAWINGS PM-I AND PM-2 FOR ADDITIONAL INFORMATION.

STATE OF ARKANSAS JAMES L. BARR REGISTERED PROFESSIONAL ENGINEER No. 9808 8/26/13

PAVEMENT MARKING DETAILS

r061276.PMD Overall.dgn 8/19/2013 12:06:21 PM

DATE REVISED	DATE FILMED	DATE REVISED	DATE FILMED

FED.RD. DIST.NO.	STATE	FED.AID PROJ.NO.	SHEET NO.	TOTAL SHEETS
6	ARK.			
JOB NO.		061276	112	438

(2) PAVEMENT MARKING DETAILS

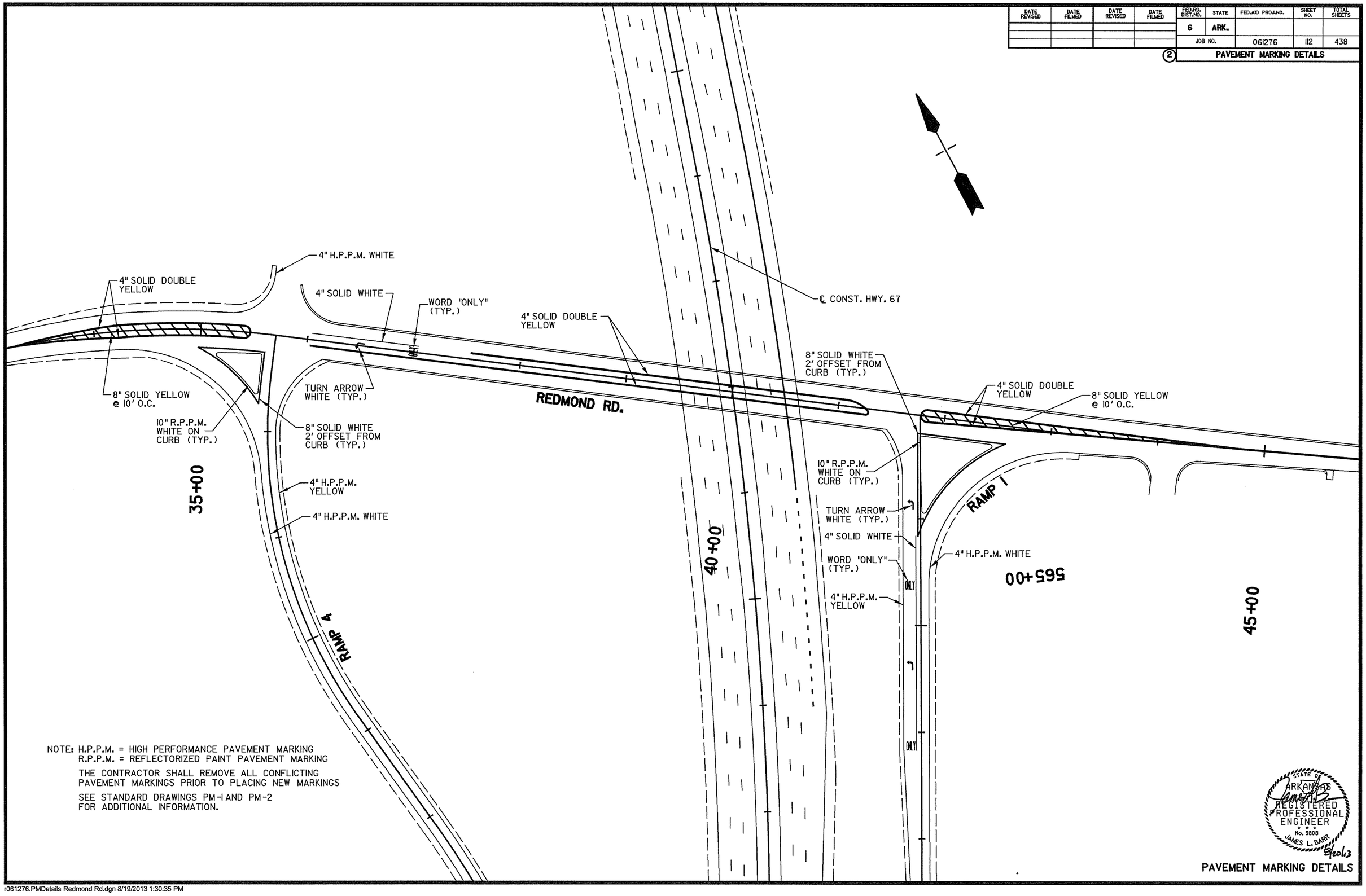

NOTE: H.P.P.M. = HIGH PERFORMANCE PAVEMENT MARKING
R.P.P.M. = REFLECTORIZED PAINT PAVEMENT MARKING

THE CONTRACTOR SHALL REMOVE ALL CONFLICTING PAVEMENT MARKINGS PRIOR TO PLACING NEW MARKINGS

SEE STANDARD DRAWINGS PM-1 AND PM-2 FOR ADDITIONAL INFORMATION.

STATE OF ARKANSAS
REGISTERED PROFESSIONAL ENGINEER
No. 9808
JAMES L. BARR
8/20/13

PAVEMENT MARKING DETAILS

r061276.PMDetails Redmond Rd.dgn 8/19/2013 1:30:35 PM

DATE REVISED	DATE FILMED	DATE REVISED	DATE FILMED	FED.RD. DIST.NO.	STATE	FED.AID PROJ.NO.	SHEET NO.	TOTAL SHEETS
				6	ARK.			
				JOB NO.		061276	113	438

(2) PAVEMENT MARKING DETAILS

NOTE: H.P.P.M. = HIGH PERFORMANCE PAVEMENT MARKING
R.P.P.M. = REFLECTORIZED PAINT PAVEMENT MARKING

THE CONTRACTOR SHALL REMOVE ALL CONFLICTING PAVEMENT MARKINGS PRIOR TO PLACING NEW MARKINGS

SEE STANDARD DRAWINGS PM-1 AND PM-2 FOR ADDITIONAL INFORMATION.

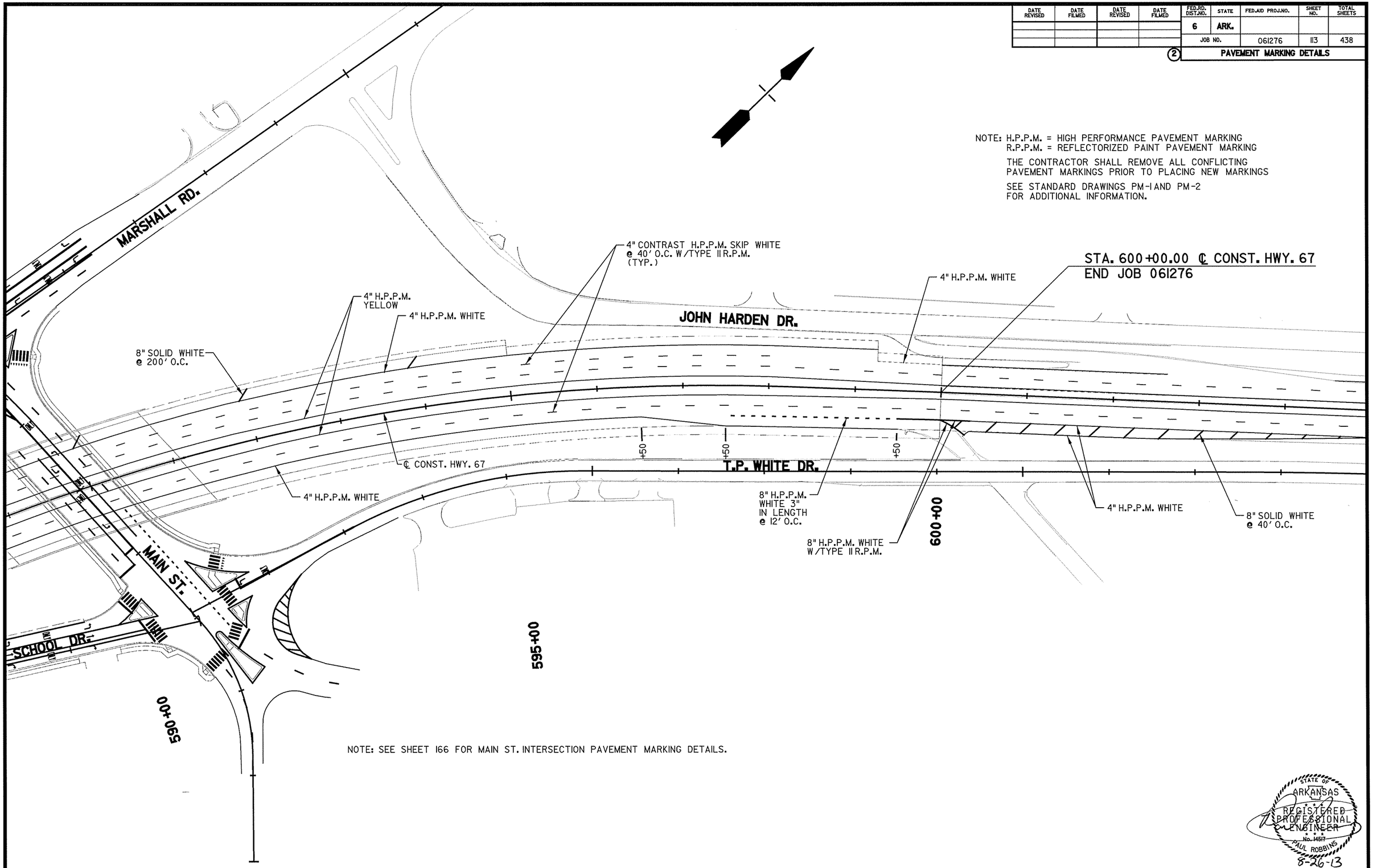

NOTE: SEE SHEET 166 FOR MAIN ST. INTERSECTION PAVEMENT MARKING DETAILS.

STATE OF ARKANSAS
REGISTERED PROFESSIONAL ENGINEER
No. 14517
PAUL ROBBINS
8-26-13

PAVEMENT MARKING DETAILS

DATE REVISED	DATE FILMED	DATE REVISED	DATE FILMED	FED.RD. DIST.NO.	STATE	FED.AID PROJ.NO.	SHEET NO.	TOTAL SHEETS
				6	ARK.			
				JOB NO.		061276	114	438

(2) SIGNING SUMMARY AND SIGNING QUANTITIES

SIGNING SUMMARY OF QUANTITIES

ITEM NUMBER	ITEM	TOTAL	UNIT
303	AGGREGATE BASE COURSE (CLASS 7)	210	TON
SP, SS &407	MINERAL AGGREGATE IN ACHM SURFACE COURSE (1/2")	48	TON
SP, SS &407	ASPHALT BINDER (PG 64-22) IN ACHM SURFACE COURSE (1/2")	3	TON
617	GUARDRAIL (TYPE A)	700	LIN FT
617	TERMINAL ANCHOR POSTS (TYPE 1)	4	EACH
617	GUARDRAIL TERMINAL (TYPE 2)	4	EACH
SP	REMOVAL AND DISPOSAL OF OVERHEAD SIGN STRUCTURE	1	EACH
SP	STEEL OVERHEAD SIGN STRUCTURE (OH-067-60-23)	1	EACH
SP	STEEL OVERHEAD SIGN STRUCTURE (OH-067-60-29)	1	EACH
SP	RELOCATION OF EXISTING OVERHEAD SIGN STRUCTURE (OH-067-60-26)	1	EACH
725	GUIDE SIGN - ROADSIDE MOUNTED (DEMOUNTABLE LEGEND)	764	SQ. FT.
725	GUIDE SIGN - OVERHEAD MOUNTED (DEMOUNTABLE LEGEND)	561	SQ. FT.
727	EXIT NUMBER PANEL (TYPE A)	93	SQ. FT.
SP	RELOCATION OF VMS ASSEMBLY	1	EACH
SP	RELOCATION OF CAMERA ASSEMBLY	1	EACH
SP	RELOCATION OF EXISTING OVERHEAD SIGNS	5	EACH
726	STANDARD SIGNS	614	SQ. FT.
730	BREAKAWAY SIGN SUPPORT (TYPE G-2)	11351	POUND

STANDARD SIGNS FLAT SHEET

	STANDARD SIGNS FLAT SHEET				BREAKAWAY SIGN SUPPORT									
	I-BEAM SIGN SUPPORTS				STEEL									SIGN
	TYPE			STANDARD	SECT.		SIGN POST LENGTH		STUB POST		FOOTINGS			POST
SIGN NO./				SIGN	A-572		H - 1	H - 2	H - 1	H - 2	DIA.	DEPTH	EMBED.	AND STUB
LOCATION	U-1	G-1	G-2	SQ. FT.	BEAM	LBS	LIN FT		LIN FT		LIN FT			POUND
SS-067-571+80NB			1	20.00	W6	9	12.00	13.00	1.99	1.99	2.00	3.00	2.00	260.82
SS-067-551+00NB			1	20.00	W6	9	12.00	13.00	1.99	1.99	2.00	3.00	2.00	260.82
SS-067-523+00SB			1	20.00	W6	9	12.00	13.00	1.99	1.99	2.00	3.00	2.00	260.82
SS-067-575+00SB			1	16.00	W6	9	12.00	13.00	1.99	1.99	2.00	3.00	2.00	260.82
SS-067-596+00SB			1	16.00	W6	9	12.00	13.00	1.99	1.99	2.00	3.00	2.00	260.82
SS-067-560+00NB			1	16.00	W6	9	12.00	13.00	1.99	1.99	2.00	3.00	2.00	260.82
SS-067-586+00NB			1	16.00	W6	9	12.00	13.00	1.99	1.99	2.00	3.00	2.00	260.82
SS-067-556+00SB			1	16.00	W6	9	11.00	12.00	1.99	1.99	2.00	3.00	2.00	242.82
SS-067-577+00NB-A			1	16.00	W6	9	11.00	12.00	1.99	1.99	2.00	3.00	2.00	242.82
SS-067-577+00NB-B			1	16.00	W6	9	11.00	12.00	1.99	1.99	2.00	3.00	2.00	242.82
SS-067-587+50NB			1	16.00	W6	9	11.00	12.00	1.99	1.99	2.00	3.00	2.00	242.82
SS-067-529+50SB			1	42.25	W6	9	13.50	14.50	1.99	1.99	2.00	3.00	2.00	287.82
SS-067-599+00SB			1	24.00	W6	9	10.00	11.00	1.99	1.99	2.00	3.00	2.00	224.82
SS-067-599+00NB			1	24.00	W6	9	10.00	11.00	1.99	1.99	2.00	3.00	2.00	224.82
SS-067-597+00SB			1	24.00	W6	9	10.00	11.00	1.99	1.99	2.00	3.00	2.00	224.82
SS-067-597+00NB			1	24.00	W6	9	10.00	11.00	1.99	1.99	2.00	3.00	2.00	224.82
SS-067-595+00SB			1	24.00	W6	9	10.00	11.00	1.99	1.99	2.00	3.00	2.00	224.82
SS-067-595+00NB			1	24.00	W6	9	10.00	11.00	1.99	1.99	2.00	3.00	2.00	224.82
SS-067-593+00NB			1	24.00	W6	9	10.00	11.00	1.99	1.99	2.00	3.00	2.00	224.82
SS-067-593+00NB			1	24.00	W6	9	10.00	11.00	1.99	1.99	2.00	3.00	2.00	224.82
SS-067-589+00NB			1	24.00	W6	9	10.00	11.00	1.99	1.99	2.00	3.00	2.00	224.82
SS-067-589+00NB			1	24.00	W6	9	10.00	11.00	1.99	1.99	2.00	3.00	2.00	224.82
SS-067-587+00NB			1	24.00	W6	9	10.00	11.00	1.99	1.99	2.00	3.00	2.00	224.82
SS-067-587+00NB			1	24.00	W6	9	10.00	11.00	1.99	1.99	2.00	3.00	2.00	224.82
SS-067-585+00NB			1	24.00	W6	9	10.00	11.00	1.99	1.99	2.00	3.00	2.00	224.82
SS-067-585+00NB			1	24.00	W6	9	10.00	11.00	1.99	1.99	2.00	3.00	2.00	224.82
SS-067-591+00SB			1	24.00	W6	9	10.00	11.00	1.99	1.99	2.00	3.00	2.00	224.82
SS-067-591+00NB			1	24.00	W6	9	10.00	11.00	1.99	1.99	2.00	3.00	2.00	224.82
TOTALS:			28	614.25										6681.96

REMOVAL AND DISPOSAL

LOCATION	OVERHEAD SIGN STRUCTURE EACH
OH-067-60-23	1
TOTAL:	1

RELOCATION OF EXISTING OVERHEAD SIGNS, OVERHEAD SIGN STRUCTURES, VARIABLE MESSAGE SIGNS AND CAMERA ASSEMBLY

LOCATION	VARIABLE MESSAGE SIGNS EACH	OVERHEAD SIGNS EACH	OVERHEAD SIGN STRUCTURE EACH	CAMERA ASSEMBLY EACH
0H-067-60-21		2		
OH-067-60-22		2		
OH-067-60-26	1	1	1	1
TOTAL:	1	5	1	1

NOTE:

ALL EXISTING GUIDE SIGNS SHALL BE MAINTAINED IN SUCH A MANNER THAT THE SIGNS ARE FULLY VISIBLE, INTACT, AND ERECT FOR THE DURATION OF THE PROJECT, AND SHALL BE REMOVED WHEN THEIR USE IS NO LONGER REQUIRED.

REMOVAL AND DISPOSAL OF ROADSIDE MOUNTED SIGNS, SUPPORTS AND FOUNDATIONS SHALL NOT BE PAID FOR SEPARATELY BUT SHALL BE CONSIDERED SUBSIDIARY TO OTHER ITEMS IN THE CONTRACT.

THE EXISTING SIGNS AND SIGNS SUPPORTS SHALL BECOME THE PROPERTY OF THE CONTRACTOR. THE EXISTING FOOTINGS SHALL BE REMOVED AND THE HOLES FILLED WITH A SUITABLE MATERIAL AND COMPACTED.

EXISTING LOGOS WILL BE RELOCATED TO THE NEW LOGO SIGN BY THE CONTRACTOR. THE LOGO INSTALLATION SHALL NOT BE PAID FOR SEPARATELY BUT SHALL BE CONSIDERED SUBSIDIARY TO OTHER ITEMS IN THE CONTRACT.

THE CLEARVIEW FONT SHALL FOLLOW THE SPACING TABLES FOR CLEARVIEW AND NOT SHS E-MODIFIED. THIS INCLUDES THE USE OF CLEARVIEW 5-W-R. FOR GENERAL GUIDANCE ON LETTER AND WORD SPACING REFER TO FHWA CLEARVIEW TYPEFACE SUPPLEMENT. (http://mutcd.fhwa.dot.gov)

THE CONTRACTOR WILL BE REQUIRED TO INSTALL OVERHEAD SIGNS AND SIGN STRUCTURES OVER SOME ROADWAYS OPEN TO TRAFFIC. IT WILL BE THE RESPONSIBILITY OF THE CONTRACTOR TO PROVIDE TRAFFIC CONTROL. PAYMENT WILL BE CONSIDERED TO BE INCLUDED IN ITEM 604 OF THE STANDARD SPECIFICATIONS.

STATE OF ARKANSAS
REGISTERED PROFESSIONAL ENGINEER
No. 5851
4/10/19
L. TONY SULLIVAN

DATE REVISED	DATE FILMED	DATE REVISED	DATE FILMED	FED.RD. DIST.NO.	STATE	FED.AID PROJ.NO.	SHEET NO.	TOTAL SHEETS
				6	ARK.			
				JOB NO.		061276	115	428

(2) SIGNING QUANTITIES

MAIN LANES SIGNING QUANTITIES

SIGN NO./ LOCATION	STRUCTURE TYPE ST	CL	OH	BM	G-2	GUIDE SIGN Length LIN. FT.	Height LIN. FT.	SQ. Ft.	BREAKAWAY SIGN SUPPORT STEEL SECT. A-572 BEAM	LBS	SIGN POST LENGTH H-1 LIN FT	H-2 LIN FT	H-3 LIN FT	STUB POST H-1 LIN FT	H-2 LIN FT	H-3 LIN FT	FOOTINGS DIA.	DEPTH LIN FT	EMBED. LIN FT	SIGN POST AND STUB POUND	EXIT NUMBER PANEL LEGEND	TYPE A SQ. FT.	TYPE B SQ. FT.	TYPE C SQ. FT.	GUARDRAIL TYPE A LIN. FT.	TERM. ANCHOR POSTS TYPE 1 EACH	GUARDRAIL TERM. TYPE 2 EACH	AGG. BASE CR (CL. 7) TON	ACHM SURF. CR. 220 LBS/SY TON
EXIT 8																													
OH-067-60-26	RELOCATE EXISTING SIGNS AND SIGN STRUCTURE																								525	3	3	140	34
OH-067-60-23			1																						175	1	1	70	17
OH-067-60-551+00NB-A						12.50	8.50	106.25													8	17.50							
OH-067-60-551+00NB-B						11.50	8.50	97.75													9	17.50							
EX-067-558+50NB					1	6.00	5.00	30.00	W6	9.00	12.00	13.00		2.33	2.33		1.50	3.00	2.00	266.94									
ML-067-536+00NB					1	13.00	5.00	65.00	W6	9.00	12.00	13.00		2.33	2.33		1.50	3.00	2.00	266.94									
EXIT 9																													
OH-067-60-29			1																										
OH-067-60-565+00NB-A						11.50	9.00	103.50													8	17.50							
OH-067-60-565+00NB-B						11.50	6.50	74.75																					
OH-067-60-565+00NB-C						15.50	11.50	178.25																					
ML-067-542+00NB					1	17.00	7.00	119.00	W8	18.00	14.00	15.00		3.99	3.99		2.50	5.50	3.66	665.64									
LA-067-561+00NB					1	12.00	16.00	192.00	W8	18.00	23.00	24.00		3.99	3.99		2.50	5.50	3.66	989.64									
LFG-067-569+00NB					1	12.00	16.00	192.00	W8	18.00	23.00	24.00		3.99	3.99		2.50	5.50	3.66	989.64									
EX-067-576+00NB					1	6.00	5.00	30.00	W6	9.00	12.00	13.00		2.33	2.33		1.50	3.00	2.00	266.94									
EXIT 10A																													
ML-067-60-587+00NB					1	12.00	5.50	66.00	W8	18.00	12.50	13.50		3.99	3.99		2.50	5.50	3.66	611.64	10A	20.00							
ML-067-60-595+00NB					1	15.50	4.50	69.75	W8	18.00	12.50	13.50		3.99	3.99		2.50	5.50	3.66	611.64	10A	20.00							
GUIDE SIGNS ROADSIDE MOUNTED TOTALS;								**763.75**																					
GUIDE SIGNS OVERHEAD MOUNTED TOTALS;								**560.50**																					
TOTALS:			**2**		**8**			**1324.25**												**4669.02**		**92.50**			**700**	**4**	**4**	**210**	**51**

NOTE:
BREAKAWAY SIGN SUPPORT TOTAL IS CALCULATED BY TAKING THE LENGTH OF H-1, H-2, H-3 AND EACH STUB POST AND MULTIPLYING BY THE BEAM WEIGHT (LBS).

BASIS OF ESTIMATE:
ACHM SURFACE COURSE (1/2"): (PG 64-22)
MINERAL AGGREGATE 95%
ASPHALT BINDER (PG 64-22) 5%
NMAX = 115

STATE OF ARKANSAS
REGISTERED PROFESSIONAL ENGINEER
No. 5851
9/26/13
L. TONY SULLIVAN

RELOCATE EXISTING SIGNS - MAINTAIN OVERHEAD STRUCTURE

DATE REVISED	DATE FILMED	DATE REVISED	DATE FILMED	FED.RD. DIST.NO.	STATE	FED.AID PROJ.NO.	SHEET NO.	TOTAL SHEETS
				6	ARK.			
				JOB NO.		061276	116	438

(2) SIGN LAYOUT SHEET

OH-067-60-21

EXISTING SIGN CONFIGURATION

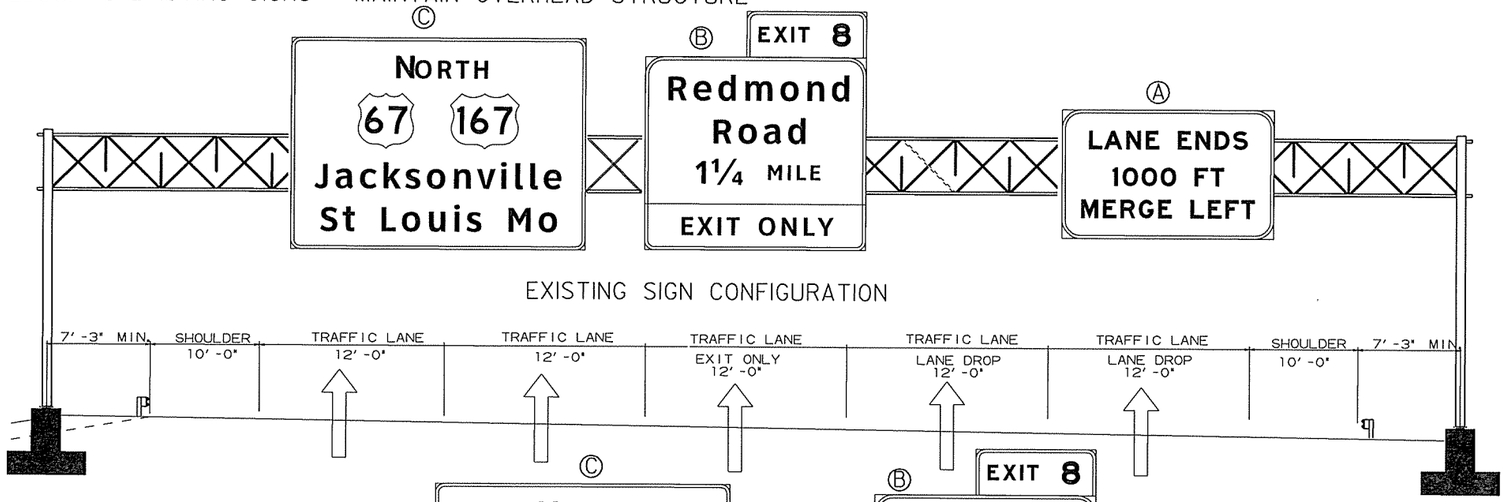

NEW SIGN CONFIGURATION

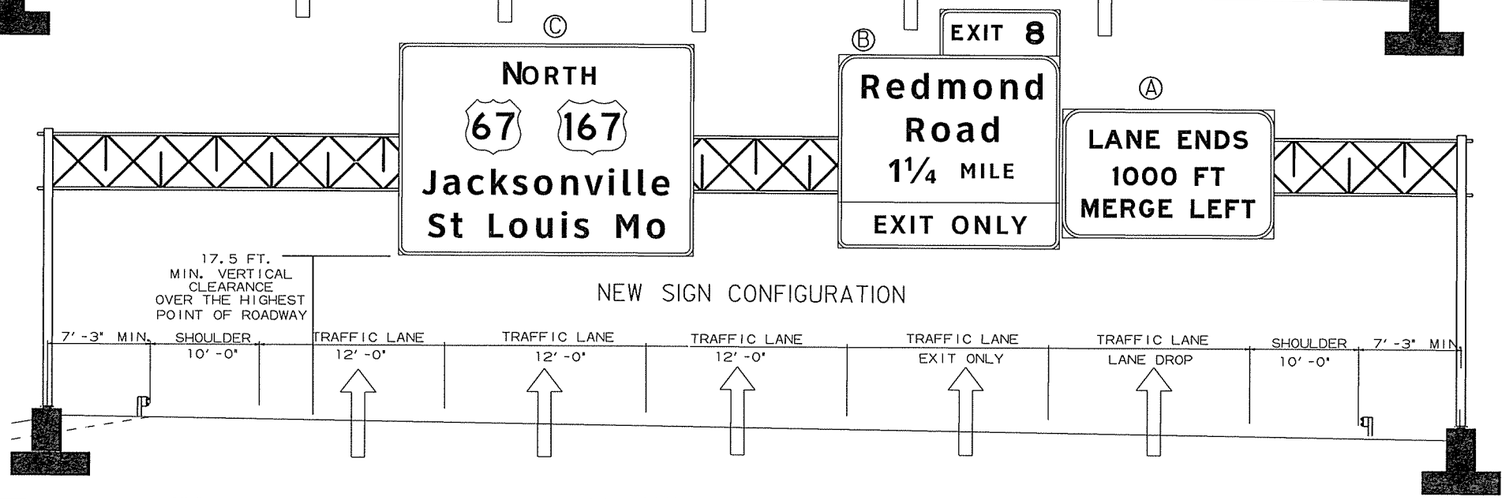

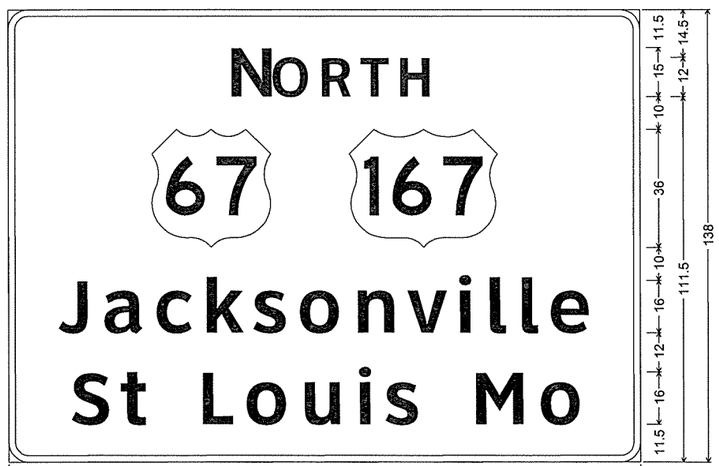

64.9 — 12.3 — 48.9 — 64.9
43.5 — 36 — 24 — 45 — 43.5
13.8 — 164.4 — 13.8
17.1 — 22.9 — 17.7 — 66.5 — 18 — 32.7 — 17.1
192

OH-067-488+80NB-C; 6.0" Radius, 2.0" Border, White on Green;
[N] ClearviewHwy-5-W; [ORTH] ClearviewHwy-5-W; [Jacksonville] ClearviewHwy-5-W;

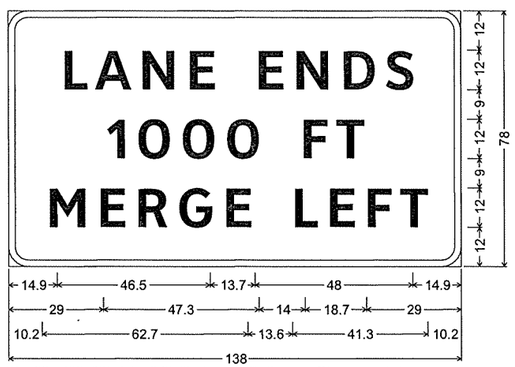

14.9 — 46.5 — 13.7 — 48 — 14.9
29 — 47.3 — 14 — 18.7 — 29
10.2 — 62.7 — 13.6 — 41.3 — 10.2
138

OH-067-488+80NB-A; 6.0" Radius, 2.0" Border, Black on Yellow;
[LANE ENDS] ClearviewHwy-5-W; [1000 FT] ClearviewHwy-5-W;
[MERGE LEFT] ClearviewHwy-5-W;

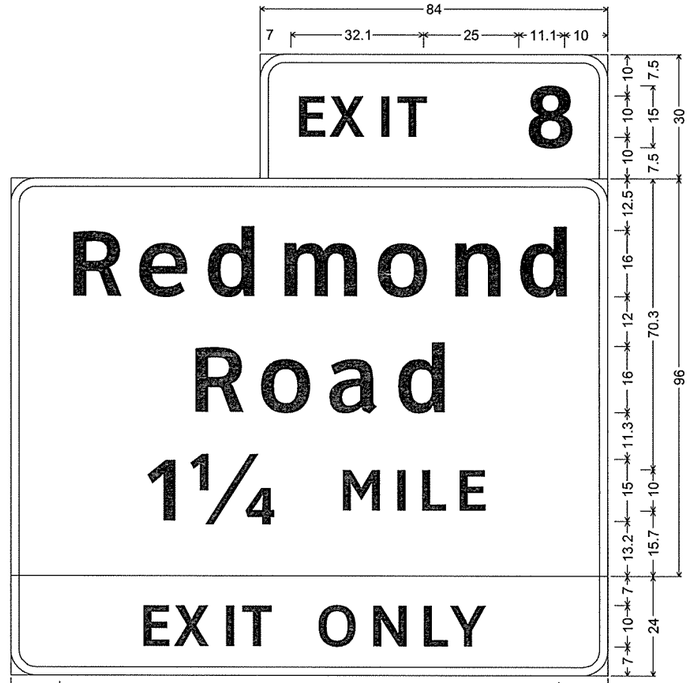

11.8 — 120.4 — 11.8
41.2 — 61.6 — 41.2
31.3 — 6.9 — 7 — 24.7 — 12 — 34.6 — 31.3
144
29.9 — 32.1 — 10.5 — 41.6 — 29.9

OH-067-488+80NB-B; 6.0" Radius, 2.0" Border, White on Green;
[EXIT] ClearviewHwy-5-W; [8] ClearviewHwy-5-W;
6.0" Radius, 2.0" Border, White on Green;
[Redmond] ClearviewHwy-5-W; [Road] ClearviewHwy-5-W;
[1 ¼ MILE] ClearviewHwy-5-W;
6.0" Radius, 2.0" Border, Black on Yellow;
[EXIT ONLY] ClearviewHwy-5-W;

STATE OF ARKANSAS
REGISTERED PROFESSIONAL ENGINEER
No. 5851
8/15/13
ANTONY SULLIVAN

RELOCATE EXISTING SIGNS - MAINTAIN OVERHEAD STRUCTURE

DATE REVISED	DATE FILMED	DATE REVISED	DATE FILMED	FED.RD. DIST.NO.	STATE	FED.AID PROJ.NO.	SHEET NO.	TOTAL SHEETS
				6	ARK.			
				JOB NO.		061276	117	438

(2) SIGN LAYOUT SHEET

OH-067-60-22

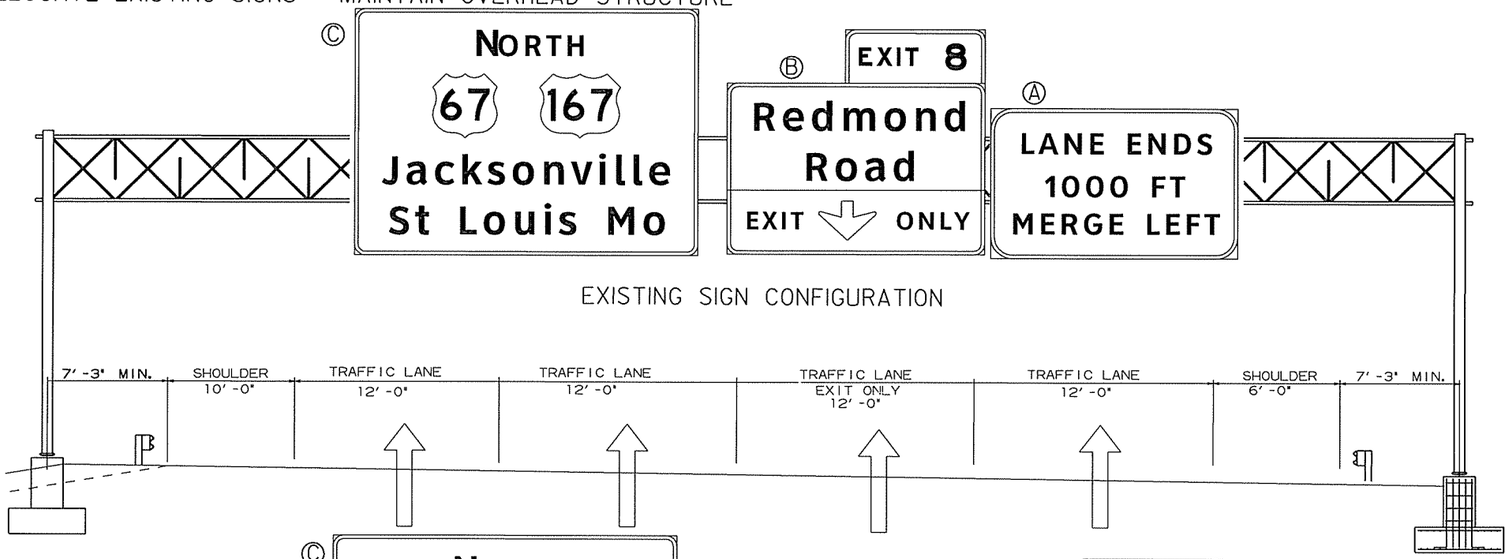

EXISTING SIGN CONFIGURATION

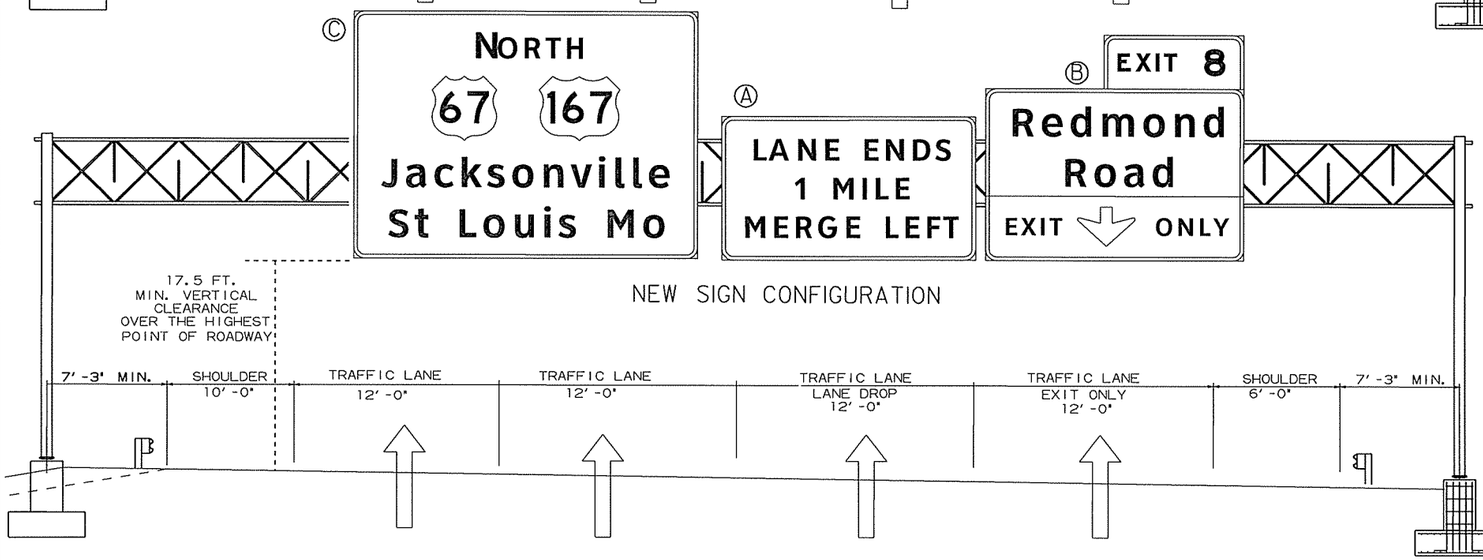

NEW SIGN CONFIGURATION

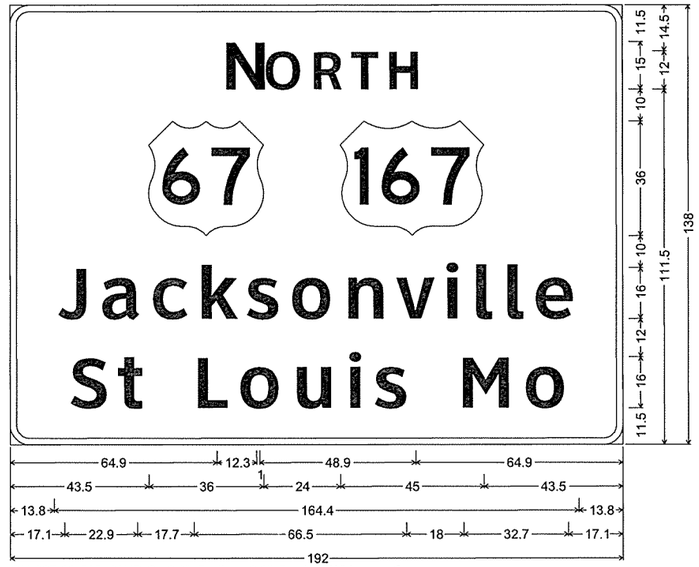

OH-067-60-525+00NB-C; 6.0" Radius, 2.0" Border, White on Green;
[N] ClearviewHwy-5-W; [ORTH] ClearviewHwy-5-W; [Jacksonville] ClearviewHwy-5-W;
[St Louis Mo] ClearviewHwy-5-W;

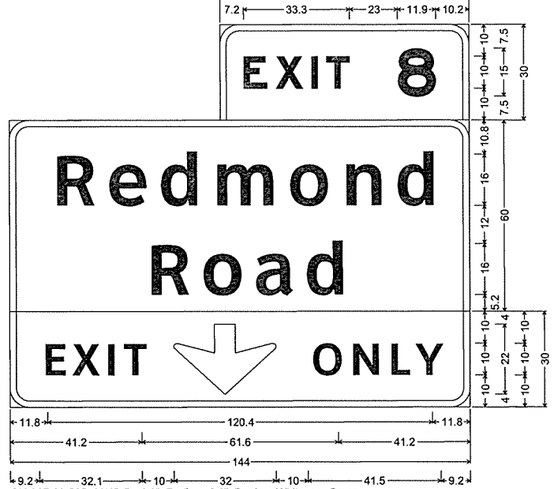

OH-067-60-525+00NB-B; 6.0" Radius, 2.0" Border, White on Green;
[EXIT] E Mod; [8] E Mod;
6.0" Radius, 2.0" Border, White on Green;
[Redmond] ClearviewHwy-5-W; [Road] ClearviewHwy-5-W;
6.0" Radius, 2.0" Border, Black on Yellow;
[EXIT] ClearviewHwy-5-W; Down Arrow 22.0" 270°; [ONLY] ClearviewHwy-5-W;

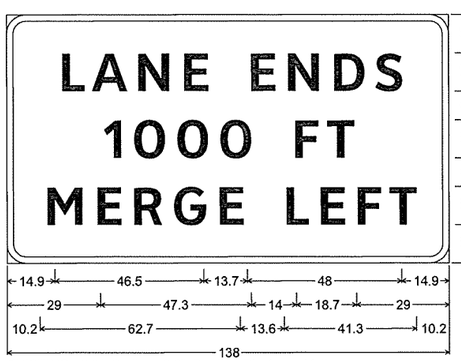

EXISTING; 6.0" Radius, 2.0" Border, Black on Yellow;
[LANE ENDS] ClearviewHwy-5-W; [1000 FT] ClearviewHwy-5-W;
[MERGE LEFT] ClearviewHwy-5-W;

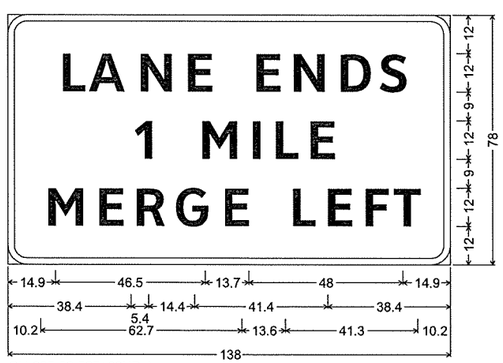

OH-067-60-525+00NB-A;
6.0" Radius, 2.0" Border, Black on Yellow;
[LANE ENDS] ClearviewHwy-5-W; [1 MILE] ClearviewHwy-5-W;
[MERGE LEFT] ClearviewHwy-5-W;

THE LEGEND ON THE EXISTING OVERHEAD MOUNTED SIGN OH-067-60-525+00NB-A, SHALL BE MODIFIED AS SHOWN. THIS MODIFICATION SHALL NOT BE PAID FOR SEPARATELY BUT SHALL BE CONSIDERED SUBSIDIARY TO OTHER ITEMS IN THE CONTRACT.

STATE OF ARKANSAS
REGISTERED PROFESSIONAL ENGINEER
No. 5851
9/15/13
J. TONY SULLIVAN

RELOCATE EXISTING OVERHEAD SIGNS,
SIGN STRUCTURE AND CAMERA ASSEMBLY
STA 553+00 TO STA 535+00
OH-067-60-535+00SB

DATE REVISED	DATE FILMED	DATE REVISED	DATE FILMED	FED.RD. DIST.NO.	STATE	FED.AID PROJ.NO.	SHEET NO.	TOTAL SHEETS
				6	ARK.			
				JOB NO.		061276	118	438

(2) SIGN LAYOUT SHEET

OH-067-60-26

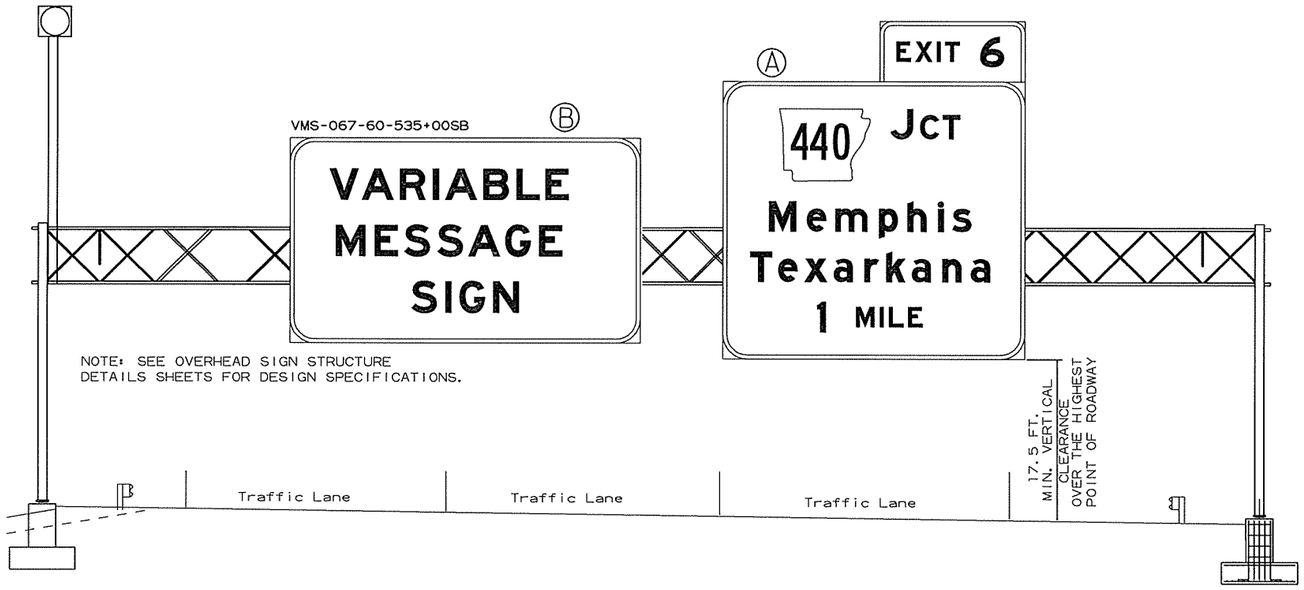



OH 067-60A STA535+00SB-A; 6.0" Radius, 2.0" Border, White on Green;
[EXIT] ClearviewHwy-5-W; [6] ClearviewHwy-5-W;
6.0" Radius, 2.0" Border, White on Green;
M1-6; [J] ClearviewHwy-5-W; [CT] ClearviewHwy-5-W;
[Memphis] ClearviewHwy-5-W; [Texarkana] ClearviewHwy-5-W;
[1 MILE] ClearviewHwy-5-W;

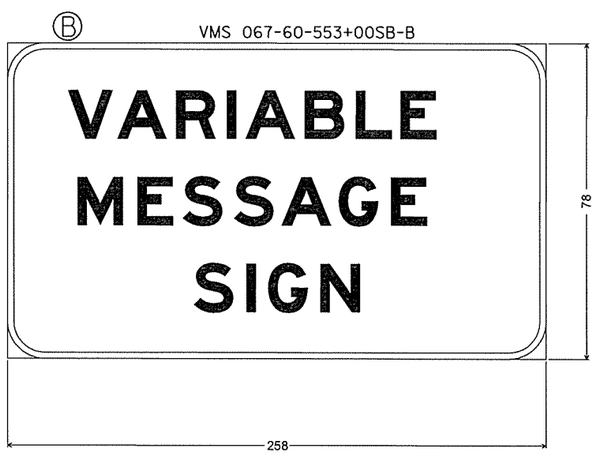



DATE REVISED	DATE FILMED	DATE REVISED	DATE FILMED	FED.RD. DIST.NO.	STATE	FED.AID PROJ.NO.	SHEET NO.	TOTAL SHEETS
				6	ARK.			
				JOB NO.		061276	119	438

(2) SIGN LAYOUT SHEET

OH-067-60-23

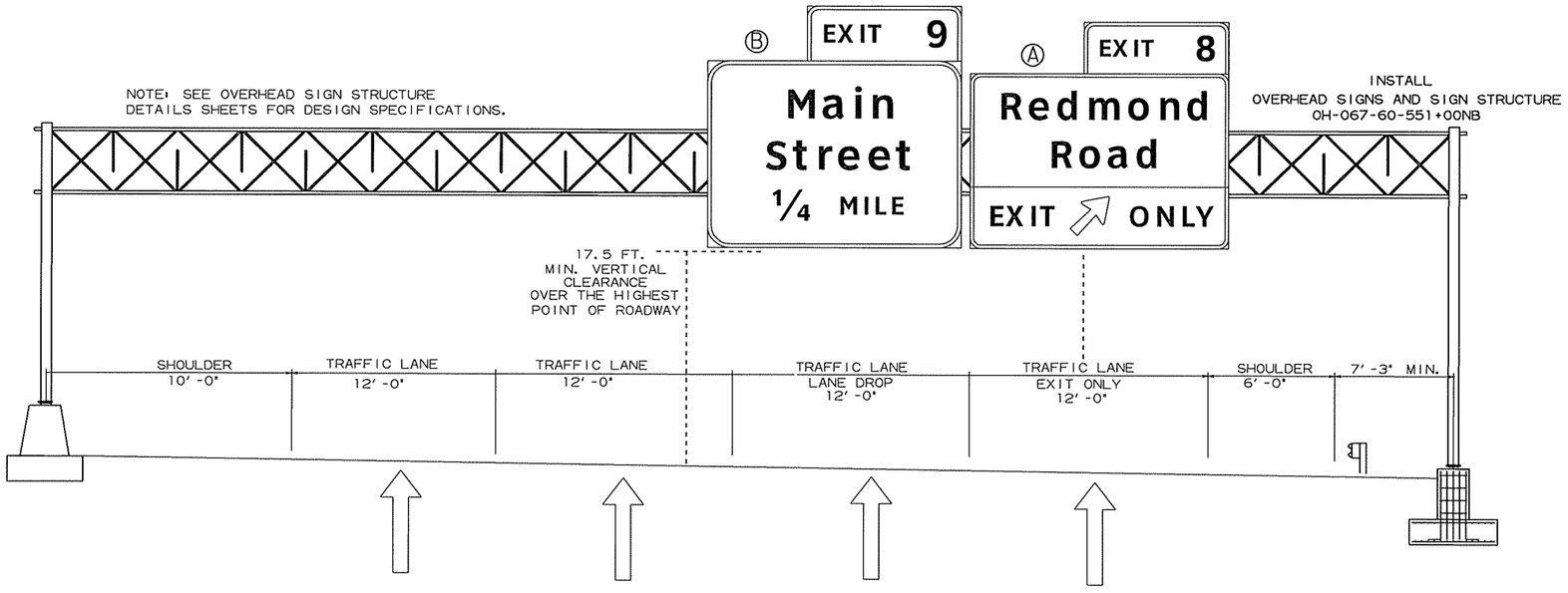

NOTES:

ALL EXISTING GUIDE SIGNS SHALL BE MAINTAINED IN SUCH A MANNER THAT THE SIGNS ARE FULLY VISIBLE, INTACT, AND ERECT FOR THE DURATION OF THE PROJECT, AND SHALL BE REMOVED WHEN THEIR USE IS NO LONGER REQUIRED. REMOVAL AND DISPOSAL OF SIGNS, SUPPORTS AND FOUNDATIONS SHALL NOT BE PAID FOR SEPARATELY BUT SHALL BE CONSIDERED SUBSIDIARY TO OTHER ITEMS IN THE CONTRACT.

THE EXISTING SIGNS AND SUPPORTS SHALL BECOME THE PROPERTY OF THE CONTRACTOR. THE EXISTING FOOTINGS SHALL BE REMOVED AND THE HOLES FILLED WITH A SUITABLE MATERIAL AND COMPACTED.

EXISTING LOGOS WILL BE RELOCATED TO THE NEW LOGO SIGN BY THE CONTRACTOR. THE LOGO INSTALLATION SHALL NOT BE PAID FOR SEPARATELY BUT SHALL BE CONSIDERED SUBSIDIARY TO OTHER ITEMS IN THE CONTRACT.

THE CLEARVIEW FONT SHALL FOLLOW THE SPACE TABLES FOR CLEARVIEW AND NOT SHS E-MODIFIED. THIS INCLUDES THE USE OF CLEARVIEW 5-W-R. FOR GENERAL GUIDANCE ON LETTER AND WORD SPACING REFER TO THE FHWA CLEARVIEW TYPEFACE SUPPLEMENT. (HTTP://MUTCD.FHWA.DOT.GOV)

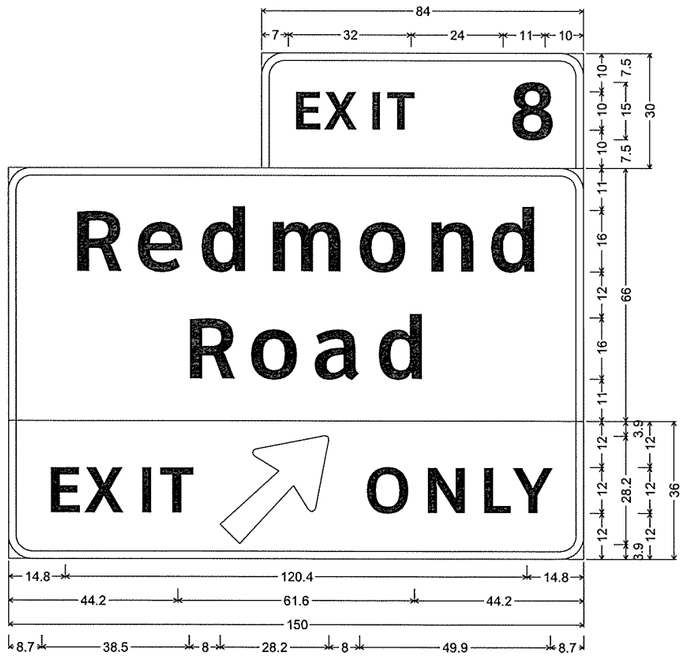

OH-067-60-551+00NB-B;
6.0" Radius, 2.0" Border, White on Green;
[EXIT] ClearviewHwy-5-W specified length; [8] ClearviewHwy-5-W;
6.0" Radius, 2.0" Border, White on Green;
[Redmond] ClearviewHwy-5-W; [Road] ClearviewHwy-5-W;
6.0" Radius, 2.0" Border, Black on Yellow;
[EXIT] ClearviewHwy-5-W; Arrow 17 - 36.0" 45°; [ONLY] ClearviewHwy-5-W;

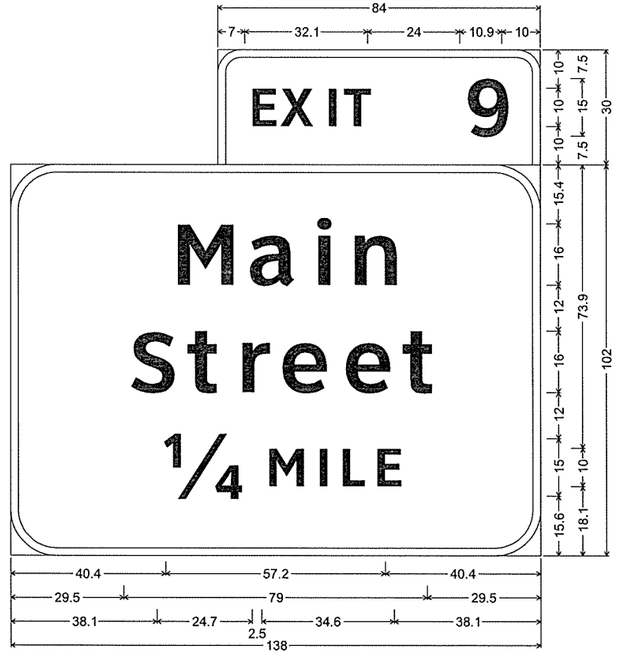

OH-067-60-551+00NB-B;
6.0" Radius, 2.0" Border, White on Green;
[EXIT] ClearviewHwy-5-W; [9] ClearviewHwy-5-W;
12.0" Radius, 2.0" Border, White on Green;
[Main] ClearviewHwy-5-W; [Street] ClearviewHwy-5-W; [1/4] ClearviewHwy-5-W;
[MILE] ClearviewHwy-5-W;

STATE OF ARKANSAS
REGISTERED PROFESSIONAL ENGINEER
No. 5851
5/15/13
L. TONY SULLIVAN

DATE REVISED	DATE FILMED	DATE REVISED	DATE FILMED	FED.RD. DIST.NO.	STATE	FED.AID PROJ.NO.	SHEET NO.	TOTAL SHEETS
				6	ARK.			
				JOB NO.		061276	120	438

(2) SIGN LAYOUT SHEET

OH-067-60-29

NOTE: SEE OVERHEAD SIGN STRUCTURE DETAILS SHEETS FOR DESIGN SPECIFICATIONS.

INSTALL
OVERHEAD SIGNS AND SIGN STRUCTURE
OH-067-60-565+00NB

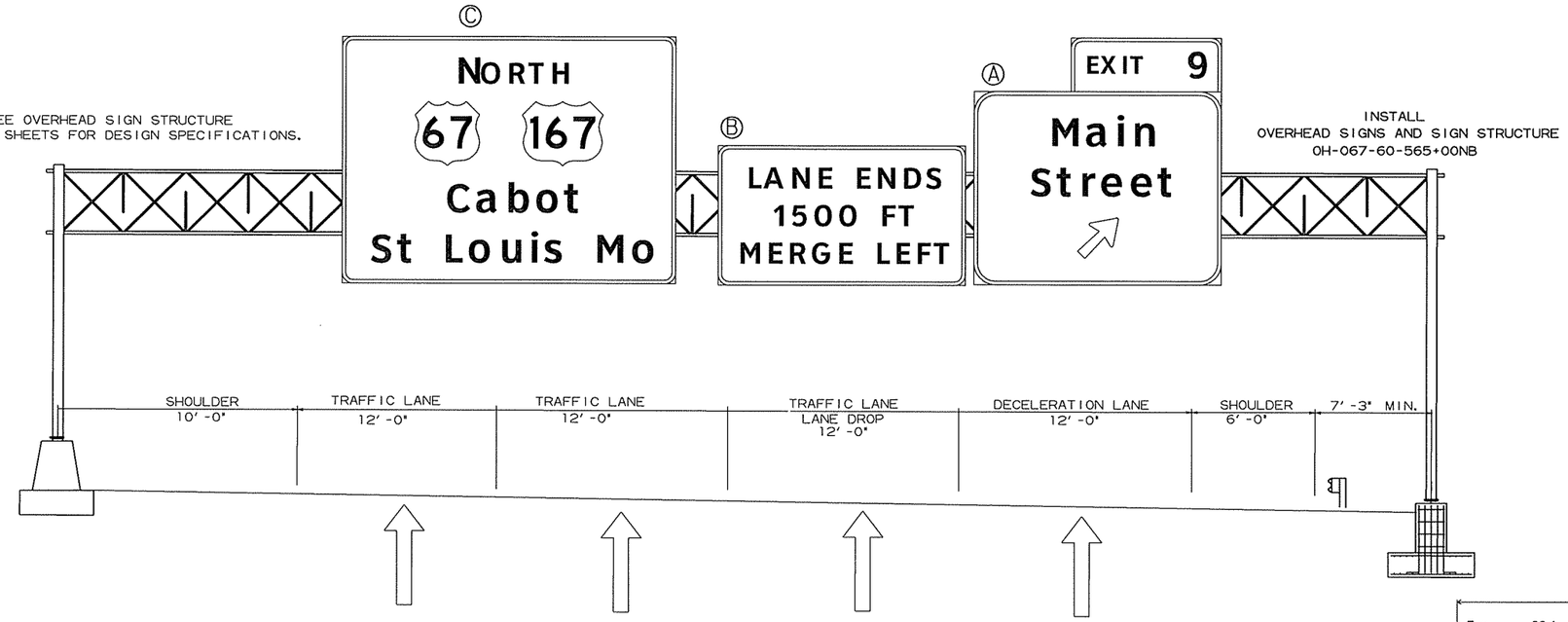

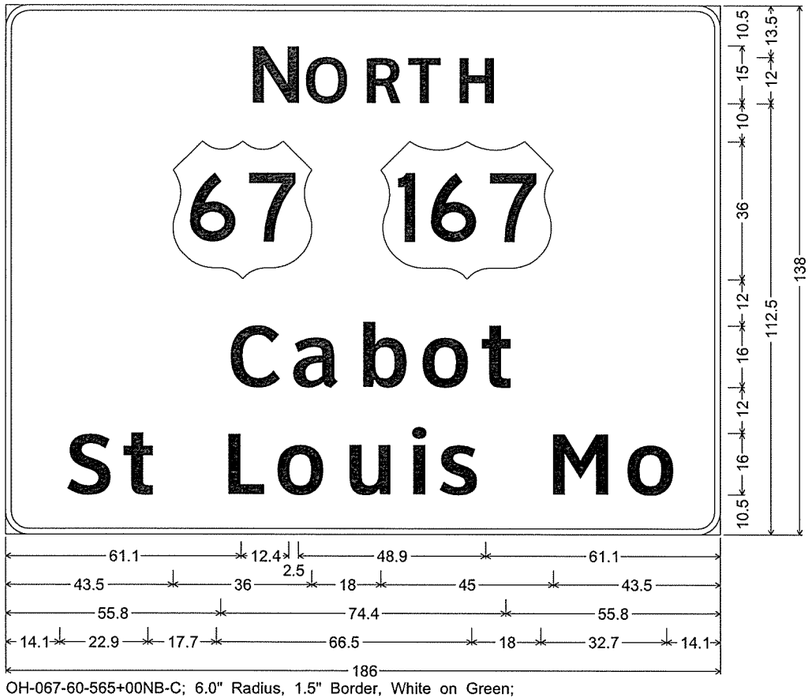

OH-067-60-565+00NB-C; 6.0" Radius, 1.5" Border, White on Green;
[N] ClearviewHwy-5-W; [ORTH] ClearviewHwy-5-W; [Cabot] ClearviewHwy-5-W;
[St Louis Mo] ClearviewHwy-5-W;

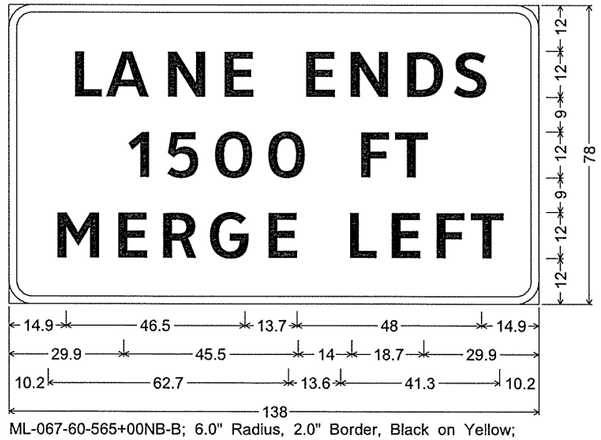

ML-067-60-565+00NB-B; 6.0" Radius, 2.0" Border, Black on Yellow;
[LANE ENDS] ClearviewHwy-5-W; [1500 FT] ClearviewHwy-5-W;
[MERGE LEFT] ClearviewHwy-5-W;

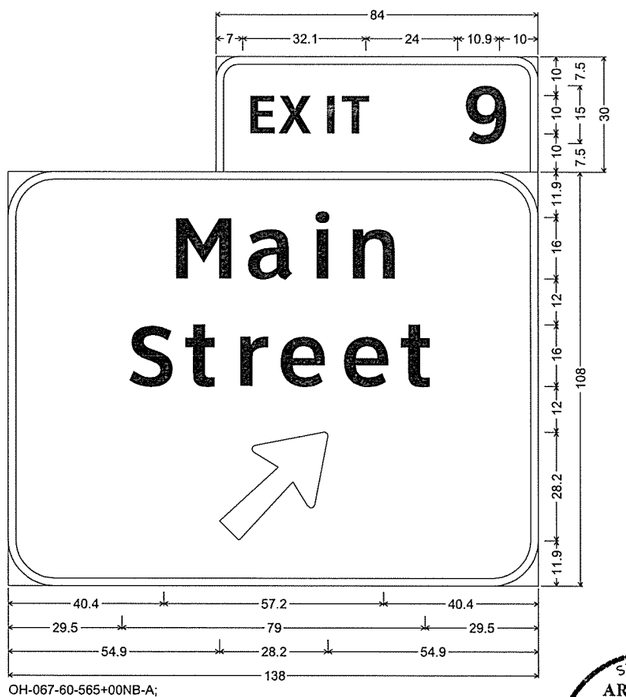

OH-067-60-565+00NB-A;
6.0" Radius, 2.0" Border, White on Green;
[EXIT] ClearviewHwy-5-W; [9] ClearviewHwy-5-W;
12.0" Radius, 2.0" Border, White on Green;
[Main] ClearviewHwy-5-W; [Street] ClearviewHwy-5-W; Arrow 17 - 36.0" 45°;

STATE OF ARKANSAS
REGISTERED PROFESSIONAL ENGINEER
No. 5851
8/15/13
TONY SULLIVAN

DATE REVISED	DATE FILMED	DATE REVISED	DATE FILMED	FED.RD. DIST.NO.	STATE	FED.AID PROJ.NO.	SHEET NO.	TOTAL SHEETS
				6	ARK.			
				JOB NO.		061276	121	438

(2) SIGN LAYOUT SHEET

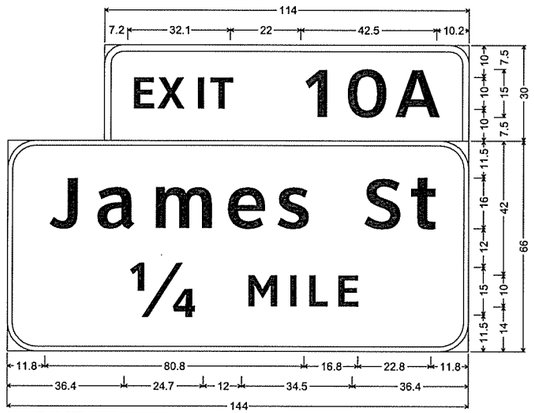

ML-067-60-587+00NB;
6.0" Radius, 2.0" Border, White on Green;
[EXIT] ClearviewHwy-5-W; [10A] ClearviewHwy-5-W;
9.0" Radius, 1.5" Border, White on Green;
[James St] ClearviewHwy-5-W; [1/4 MILE] ClearviewHwy-5-W;

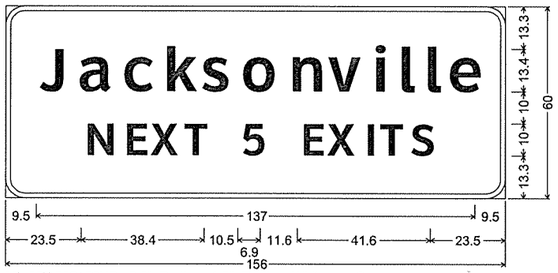

ML-067-536+00NB; 6.0" Radius, 1.5" Border, White on Green;
[Jacksonville] ClearviewHwy-5-W; [NEXT 5 EXITS] ClearviewHwy-5-W;

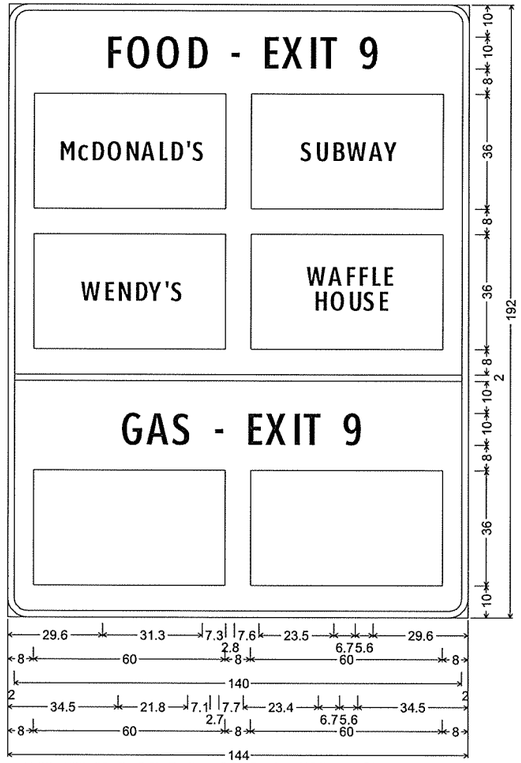

LFG-067-569+00NB; 6.0" Radius, 2.0" Border, White on Blue;
[FOOD - EXIT 9] ClearviewHwy-2-W;
[GAS - EXIT 9] ClearviewHwy-2-W;

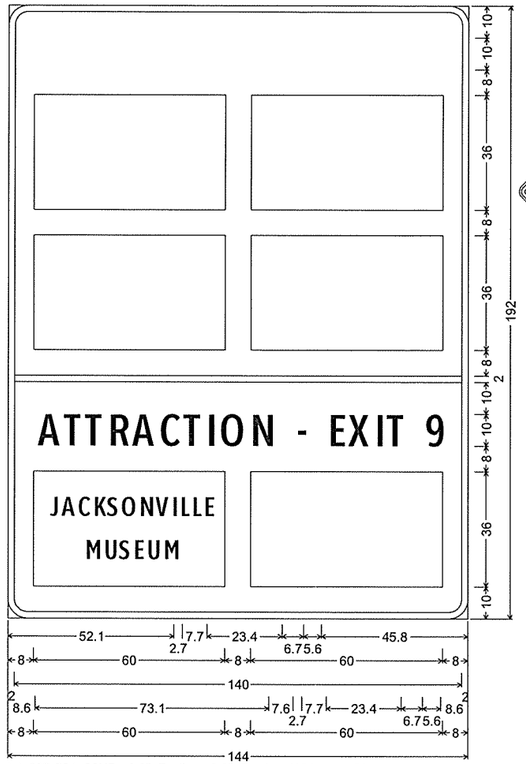

LA-067-561+00NB; 6.0" Radius, 2.0" Border, White on Blue;
[- EXIT 9] ClearviewHwy-2-W;
[ATTRACTION - EXIT 9] ClearviewHwy-2-W;



W8-13 48"X48"
SS-067-575+00SB
SS-067-560+00NB
SS-067-596+00SB
SS-067-586+00NB

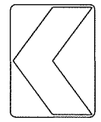

W1-8 36"X48"
SS-067-599+00SB
SS-067-599+00NB
SS-067-589+00SB
SS-067-589+00NB
SS-067-597+00SB
SS-067-597+00NB
SS-067-587+00SB
SS-067-587+00NB
SS-067-595+00SB
SS-067-595+00NB
SS-067-585+00SB
SS-067-585+00NB
SS-067-593+00SB
SS-067-593+00NB
SS-067-591+00SB
SS-067-591+00NB

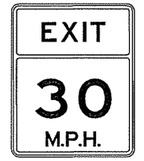

W13-2(30) 48"X60"
SS-067-571+80NB

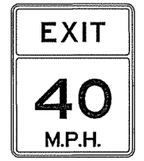

W13-2(40) 48"X60"
SS-067-551+00NB



W4-1RT 48"X48"
SS-067-556+00SB
SS-067-587+50SB

R2-1(65) 48"X60"
SS-067-523+00SB

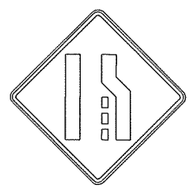

W4-2RT 48"X48"
SS-067-577+00NB-A
SS-067-577+00NB-B

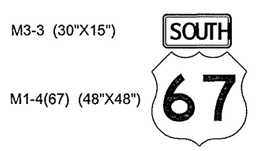

M3-3 (30"X15")
M1-4(67) (48"X48")
M3-3 (30"X15")
M1-4(167) (60"X48")
SS-067-529+50SB

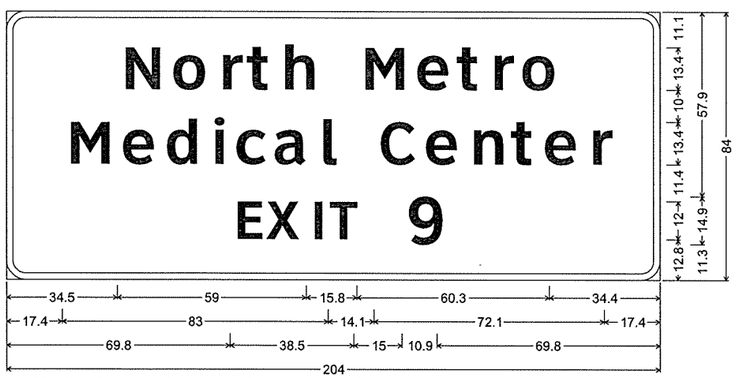

ML-067-542+00NB; 6.0" Radius, 2.0" Border, White on Green;
[North Metro] ClearviewHwy-5-W; [Medical Center] ClearviewHwy-5-W; [EXIT] ClearviewHwy-5-W;
[9] ClearviewHwy-5-W;

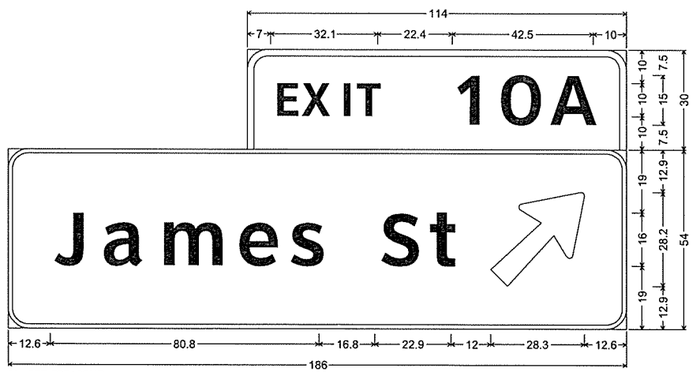

ML-067-595+00NB;
6.0" Radius, 2.0" Border, White on Green;
[EXIT] ClearviewHwy-5-W; [10A] ClearviewHwy-5-W;
6.0" Radius, 1.3" Border, White on Green;
[James St] ClearviewHwy-5-W; Arrow 17 - 36.0" 45°;

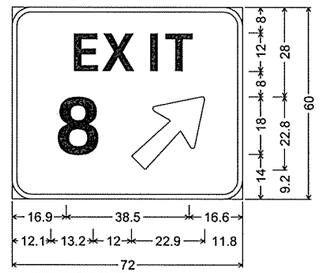

EX-067-558+50NB;
6.0" Radius, 2.0" Border, White on Green;
[EXIT] ClearviewHwy-5-W;
[8] ClearviewHwy-5-W-R;
Arrow Custom - 29.0" 45°;

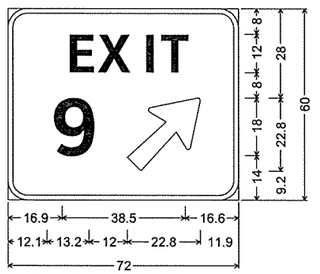

EX-067-576+00NB;
6.0" Radius, 2.0" Border, White on Green;
[EXIT] ClearviewHwy-5-W;
[9] ClearviewHwy-5-W-R;
Arrow Custom - 29.0" 45°;



DATE REVISED	DATE FILMED	DATE REVISED	DATE FILMED	FED.RD. DIST.NO.	STATE	FED.AID PROJ.NO.	SHEET NO.	TOTAL SHEETS
				6	ARK.			
				JOB NO.		061276	122	438

(2) SIGN PLACEMENT SHEET

STA 485+00 TO STA 546+00

SHOWN FOR INFO. ONLY

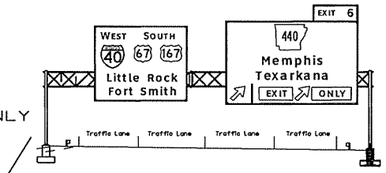

SHOWN FOR INFO. ONLY

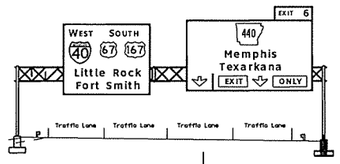

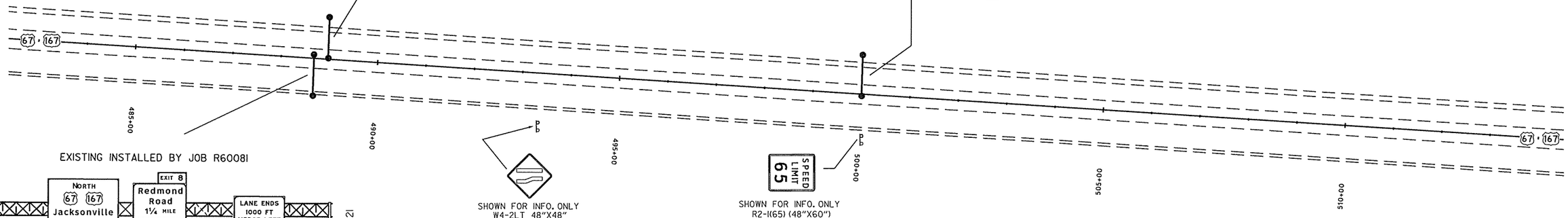

EXISTING INSTALLED BY JOB R60081

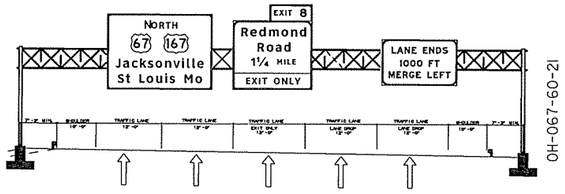

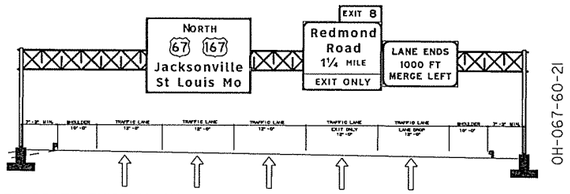

RELOCATE EXISTING SIGNS AS SHOWN - MAINTAIN OVERHEAD STRUCTURE

SHOWN FOR INFO. ONLY
W4-2LT 48"X48"

SHOWN FOR INFO. ONLY
R2-1(65) (48"X60")

INSTALL
SS-067-523+00SB
R2-1(65) (48"X60")

INSTALL
SS-067-529+50SB
M3-3 (30"X15") MI-4(67) (48"X48")
M3-3 (30"X15") MI-4(167) (60"X48")

RELOCATE EXISTING OVERHEAD SIGNS,
SIGN STRUCTURE AND CAMERA ASSEMBLY
STA 553+00 TO STA 535+00

VMS-067-60-535+00SB

OH-067-60-535+00SB

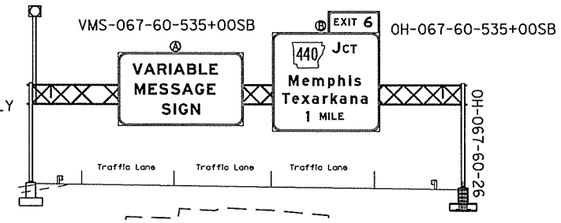

EXISTING

RELOCATE EXISTING SIGNS AS SHOWN - MAINTAIN OVERHEAD STRUCTURE

REMOVE
W4-2LT 48"X48"

Jacksonville
NEXT 5 EXITS

INSTALL
ML-067-536+00NB

North Metro
Medical Center
EXIT 9

INSTALL
ML-067-542+00NB

STATE OF ARKANSAS
REGISTERED PROFESSIONAL ENGINEER
No. 5851
8/15/13
J. TONY SULLIVAN

DATE REVISED	DATE FILMED	DATE REVISED	DATE FILMED	FED.RD. DIST.NO.	STATE	FED.AID PROJ.NO.	SHEET NO.	TOTAL SHEETS
				6	ARK.			
				JOB NO.		061276	123	438

(2) SIGN PLACEMENT SHEET

STA 546+00 TO STA 580+00
REDMOND ROAD

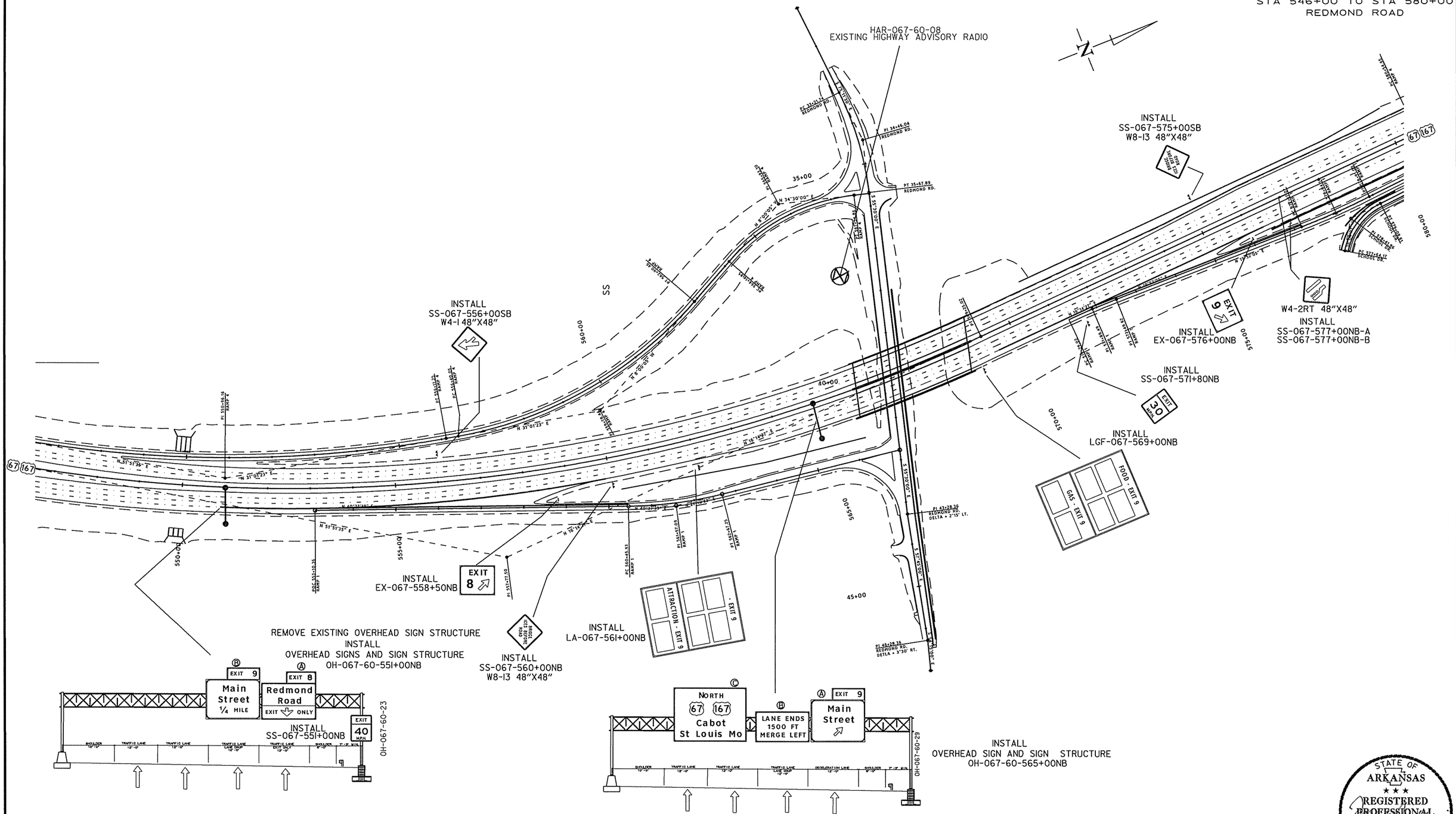

STATE OF ARKANSAS
REGISTERED PROFESSIONAL ENGINEER
No. 5851
8/13/13
LTONY SULLIVAN

DATE REVISED	DATE FILMED	DATE REVISED	DATE FILMED	FED.RD. DIST.NO.	STATE	FED.AID PROJ.NO.	SHEET NO.	TOTAL SHEETS
				6	ARK.			
				JOB NO.		061276	124	438

(2) SIGN PLACEMENT SHEET

STA 580+00 TO STA 600+00
MAIN STREET

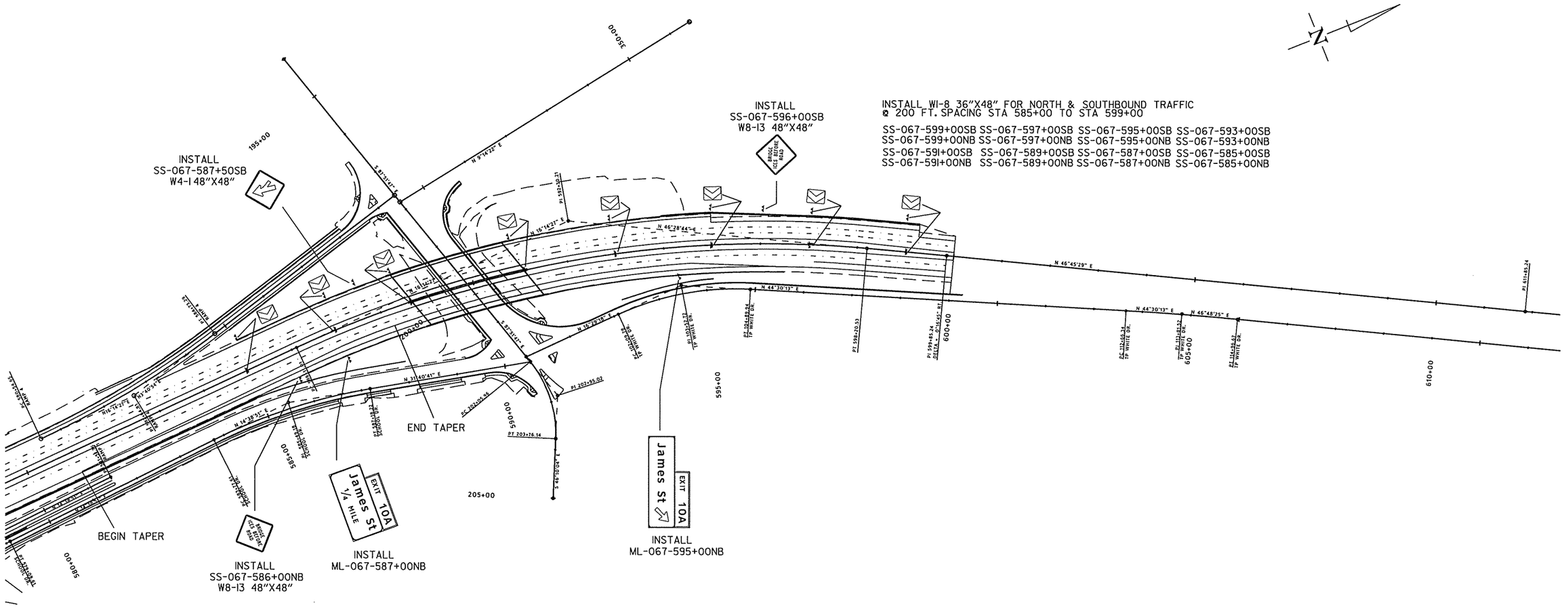

STATE OF ARKANSAS
REGISTERED PROFESSIONAL ENGINEER
No. 5851
8/15/13
L. TONY SULLIVAN

DATE REVISED	DATE FILMED	DATE REVISED	DATE FILMED	FED.RD. DIST.NO.	STATE	FED.AID PROJ.NO.	SHEET NO.	TOTAL SHEETS
				6	ARK.			
				JOB NO.		061276	125	438
				(2)		SOIL LOG		

SOIL LOG

STATION	LOCATION	DEPTH FEET	A.A.S.H.T.O. CLASSIFICATION	LIQUID LIMIT	PLASTICITY INDEX	COLOR
556+00	29' RT. OF EXISTING C.L. HWY. 67	0-5	A-6 (8)	25	14	BROWN
556+00	29' LT. OF EXISTING C.L. HWY. 67	0-5	A-6 (14)	31	19	GRAY
556+00	39' LT. OF EXISTING C.L. HWY. 67	0-5	A-6 (7)	27	15	GRAY
556+00	47' RT. OF EXISTING C.L. HWY. 67	0-5	A-6 (14)	36	20	BROWN
560+00	6' RT. OF EXISTING C.L. HWY. 67	0-5	A-6 (10)	28	17	BROWN/GRAY
560+00	13' LT. OF EXISTING C.L. HWY. 67	0-5	A-6 (11)	30	17	GRAY/BROWN
560+00	16' RT. OF EXISTING C.L. HWY. 67	0-5	A-6 (14)	32	20	BROWN/GRAY
564+00	23' RT. OF EXISTING C.L. HWY. 67	0-5	A-6 (8)	25	14	BROWN
564+00	24' LT. OF EXISTING C.L. HWY. 67	0-5	A-6 (7)	28	15	GRAY
564+00	32' RT. OF EXISTING C.L. HWY. 67	0-5	A-6 (5)	24	13	BROWN/GRAY
564+00	40' LT. OF EXISTING C.L. HWY. 67	0-5	A-6 (11)	33	20	GRAY
574+00	23' LT. OF EXISTING C.L. HWY. 67	0-5	A-6 (2)	27	11	RED/BROWN
574+00	25' RT. OF EXISTING C.L. HWY. 67	0-5	A-6 (9)	35	22	BROWN/GRAY
574+00	33' RT. OF EXISTING C.L. HWY. 67	0-5	A-6 (16)	40	26	BROWN/GRAY
574+00	37' LT. OF EXISTING C.L. HWY. 67	0-5	A-6 (1)	26	11	RED/BROWN
578+00	12' RT. OF EXISTING C.L. HWY. 67	0-5	A-6 (4)	30	15	RED/BROWN
578+00	13' LT. OF EXISTING C.L. HWY. 67	0-5	A-4 (0)	22	7	RED
582+00	23' LT. OF EXISTING C.L. HWY. 67	0-5	A-6 (4)	30	15	RED/BROWN
582+00	24' RT. OF EXISTING C.L. HWY. 67	0-5	A-6 (9)	36	20	BROWN
582+00	33' RT. OF EXISTING C.L. HWY. 67	0-5	A-6 (7)	36	22	BROWN
582+00	33' LT. OF EXISTING C.L. HWY. 67	0-5	A-4 (0)	19	4	RED/BROWN
586+00	13' RT. OF EXISTING C.L. HWY. 67	0-5	A-6 (3)	27	11	RED/BROWN
586+00	13' LT. OF EXISTING C.L. HWY. 67	0-5	A-4 (1)	23	7	RED/BROWN
594+00	23' RT. OF EXISTING C.L. HWY. 67	0-5	A-6 (8)	38	22	RED
594+00	23' LT. OF EXISTING C.L. HWY. 67	0-5	A-6 (10)	40	29	RED/BROWN
594+00	37' RT. OF EXISTING C.L. HWY. 67	0-5	A-6 (4)	32	17	RED
594+00	37' RT. OF EXISTING C.L. HWY. 67	0-5	A-6 (9)	38	22	RED
594+00	38' LT. OF EXISTING C.L. HWY. 67	0-5	A-4 (0)	ND	NP	RED
594+00	38' LT. OF EXISTING C.L. HWY. 67	0-5	A-6 (3)	34	18	RED
598+00	12' RT. OF EXISTING C.L. HWY. 67	0-5	A-6 (6)	32	15	RED
598+00	13' LT. OF EXISTING C.L. HWY. 67	0-5	A-6 (8)	33	14	RED
602+00	23' RT. OF EXISTING C.L. HWY. 67	0-5	A-6 (5)	40	12	BROWN
602+00	23' LT. OF EXISTING C.L. HWY. 67	0-5	A-7-6 (7)	42	16	RED/BROWN
602+00	36' RT. OF EXISTING C.L. HWY. 67	0-5	A-7-6 (9)	41	16	BROWN
602+00	52' LT. OF EXISTING C.L. HWY. 67	0-5	A-6 (8)	36	17	RED

SOIL CHARACTERISTICS TABULATED ABOVE ARE REPRESENTATIVE AT THE LOCATIONS OF THE SAMPLE, AND FROM SURFACE INDICATIONS ARE TYPICAL FOR THE LIMITS SHOWN. THESE DATA ARE SHOWN FOR INFORMATION ONLY. THE STATE WILL NOT BE RESPONSIBLE FOR VARIATIONS IN THE SOIL CHARACTERISTICS AND/OR EXTENT OF SAME DIFFERING FROM THE ABOVE TABULATIONS.

STATE OF ARKANSAS
REGISTERED PROFESSIONAL ENGINEER
No. 9808
JAMES L. BARR
8/23/13

SOIL LOG

DATE REVISED	DATE FILMED	DATE REVISED	DATE FILMED	FED.RD. DIST.NO.	STATE	FED.AID PROJ.NO.	SHEET NO.	TOTAL SHEETS
				6	ARK.			
				JOB NO.		061276	126	438

(2) QUANTITY SHEETS

CONSTRUCTION PAVEMENT MARKINGS AND PERMANENT PAVEMENT MARKINGS

DESCRIPTION	STAGE 1B	STAGE 1C	STAGE 2	STAGE 3A	STAGE 3B	STAGE 3C	CONSTRUCTION PAVEMENT MARKINGS	REMOVAL OF PERMANENT PAVEMENT MARKINGS	REMOVABLE CONSTRUCTION PAVEMENT MARKINGS	RAISED PAVEMENT MARKERS	THERMOPLASTIC PAVEMENT MARKINGS							REFLECTORIZED PAINT PAVEMENT MARKINGS		HIGH PERFORMANCE CONTRAST PAVEMENT MARKING	HIGH PERFORMANCE PAVEMENT MARKING		
										TYPE II (WHITE/RED)	4"		8" WHITE	12" WHITE	WORDS	ARROWS	YIELD LINE	10"		4"	4"		8"
											WHITE	YELLOW						WHITE	YELLOW	WHITE	WHITE	YELLOW	WHITE
	LIN.FT. - EACH						LIN.FT.			EACH	LIN.FT.				EACH		LIN. FT.	LIN.FT.		LIN.FT.	LIN.FT.		LIN.FT.
CONSTRUCTION PAVEMENT MARKINGS	14830			1027			15857																
REMOVAL OF PERMANENT PAVEMENT MARKINGS	3150			475	300			3925															
REMOVABLE CONSTRUCTION PAVEMENT MARKINGS	3752	7393	13777	16383	3565	11667			56537														
RAISED PAVEMENT MARKERS TYPE II (WHITE/RED)						995				995													
THERMOPLASTIC PAVEMENT MARKINGS WHITE (4")				4903		971					5874												
THERMOPLASTIC PAVEMENT MARKINGS YELLOW (4")				7037								7037											
THERMOPLASTIC PAVEMENT MARKINGS WHITE (8")				179		1069							1248										
THERMOPLASTIC PAVEMENT MARKINGS WHITE (12")						1269								1269									
THERMOPLASTIC PAVEMENT MARKINGS WORDS						12									12								
THERMOPLASTIC PAVEMENT MARKINGS ARROWS						19										19							
THERMOPLASTIC PAVEMENT MARKINGS YIELD LINE						36											36						
REFLECTORIZED PAINT PAVEMENT MARKINGS WHITE (10")						772												772					
REFLECTORIZED PAINT PAVEMENT MARKINGS YELLOW (10")						150													150				
HIGH PERFORMANCE CONTRAST PAVEMENT MARKING WHITE (4")						6866														6866			
HIGH PERFORMANCE PAVEMENT MARKING WHITE (4")						19397															19397		
HIGH PERFORMANCE PAVEMENT MARKING YELLOW (4")						19156																19156	
HIGH PERFORMANCE PAVEMENT MARKING WHITE (8")						3996																	3996
TOTALS:							15857	3925	56537	995	5874	7037	1248	1269	12	19	36	772	150	6866	19397	19156	3996

NOTE: THIS IS A HIGH TRAFFIC VOLUME ROAD AS DEFINED IN SECTION 604.03, STANDARD SPECIFICATIONS FOR HIGHWAY CONSTRUCTION, 2014 EDITION.

NOTE: THERMOPLASTIC PAVEMENT MARKINGS MAY BE SUBSTITUTED FOR INVERTED PROFILE PAVEMENT MARKINGS AT INTERSECTIONS, ISLANDS, TURNOUTS, AND OTHER SIMILAR LOCATIONS AS DIRECTED BY THE ENGINEER.

ADVANCE WARNING SIGNS AND DEVICES

	SIGN NUMBER	DESCRIPTION	SIGN SIZE	STAGE 1A	STAGE 1B	STAGE 1C	STAGE 2	STAGE 3A	STAGE 3B	STAGE 3C	MAXIMUM NUMBER REQUIRED	TOTAL SIGNS REQUIRED		TRAFFIC DRUMS	VERTICAL PANELS	BARRICADES (TYPE III)		ADVANCE WARNING ARROW PANEL	PORTABLE CHANGEABLE MESSAGE SIGN	FURNISHING & INSTALLING PRECAST CONC. BARRIER	RELOCATING PRECAST CONCRETE BARRIER	TEMPORARY IMPACT ATTENUATION BARRIER	TEMP. IMPACT ATTEN.BARR. (REPAIR)
												NO.	SQ. FT.			RIGHT	LEFT						
				LIN.FT. - EACH										EACH		LIN.FT.	LIN. FT.	DAY	WEEK	LIN. FT.		EACH	
	W20-1	ROAD WORK 1 MILE	48"x48"	4	4	4	4	4	4	4	4	4	64.0										
	W20-1	ROAD WORK 1/2 MILE	48"x48"	4	4	4	4	6	6	4	6	6	96.0										
	W20-1	ROAD WORK 1500 FT.	48"x48"	4	4	4	4	4	4	4	4	4	64.0										
	W20-1	ROAD WORK AHEAD	48"x48"	13	13	13	13	13	13	13	13	13	208.0										
	R55-1	FINES DOUBLE IN WORK ZONES WHEN WORKERS ARE PRESENT	36"x60"	8	8	8	8	8	8	8	8	8	120.0										
	W20-3	ROAD CLOSED 500 FT.	48"x48"					1	1		1	1	16.0										
	W20-3	ROAD CLOSED 1000 FT.	48"x48"					1	1		1	1	16.0										
	G20-1	ROAD WORK NEXT X MILES	60"x24"	4	4	4	4	4	4	4	4	4	40.0										
	G20-2	END ROAD WORK	48"x24"	15	15	15	15	15	15	15	15	15	120.0										
	W1-4B	REVERSE CURVE RT.	48"x48"		6	6	6	8	6	2	8	8	128.0										
	W1-4B	REVERSE CURVE LT.	48"x48"		4	4	2	2	2	2	4	4	64.0										
	W13-1	SPEED LIMIT (ADVISORY)	24"x24"		6	6	4	10	6	2	10	10	40.0										
	R11-2	ROAD CLOSED	48"x30"	2		2	2	4	3		4	4	40.0										
	W1-6	LARGE ARROW	60"x30"	12	12	12	12	19	19	12	19	19	237.5										
	W7-3A	SUPPLEMENTARY DISTANCE PLAQUE - 1 1/2 MILE	30"x24"	2							2	2	10.0										
	W7-3A	SUPPLEMENTARY DISTANCE PLAQUE - 1/2 MILE	30"x24"	1							1	1	5.0										
	W21-5A	LEFT SHOULDER CLOSED	48"x48"	3							3	3	48.0										
	W21-5A	RIGHT SHOULDER CLOSED	48"x48"	1							1	1	16.0										
	W21-5B	LEFT SHOULDER CLOSED 500 FT.	48"x48"	3							3	3	48.0										
	W21-5B	RIGHT SHOULDER CLOSED 500 FT.	48"x48"	1							1	1	16.0										
	W20-5	RIGHT LANE CLOSED 1 MILE	48"x48"	4	4	4	4	4	4	4	4	4	64.0										
	W20-5	RIGHT LANE CLOSED 1/2 MILE	48"x48"	4	4	4	4	4	4	4	4	4	64.0										
	W20-5	RIGHT LANE CLOSED 1500 FT.	48"x48"	4	4	4	4	8	8	4	8	8	128.0										
	W20-5	RIGHT LANE CLOSED 1000 FT.	48"x48"					4	4		4	4	64.0										
	W4-2	MERGE LT.	48"x48"					4	4		4	4	64.0										
	M3-3	SOUTH	24"x12"			3	3	3	3		3	3	6.0										
	M1-4	HWY. 67	24"x24"			3	3	3	3		3	3	12.0										
	M4-10R	DETOUR RIGHT ARROW	48"x18"			2	2	2	2		2	2	12.0										
	M4-10L	DETOUR LEFT ARROW	48"x18"			1	1	1	1		1	1	6.0										
	W20-2	DETOUR 500 FT.	48"x48"			1	1	1	1		1	1	16.0										
	W13-4P	ON RAMP	36"x36"			1	1	1	1		1	1	9.0										
	W4-2R	LANE ENDS	48"x48"	4	4	4	4	4	4	4	4	4	64.0										
	R2-1	SPEED LIMIT	48"x60"	12	12	12	12	12	12	12	12	12	240.0										
	R4-1	DO NOT PASS	48"x60"	8	8	8	8	8	8	8	8	8	160.0										
	R2-5A	REDUCED SPEED AHEAD	48"x60"	8	8	8	8	8	8	8	8	8	160.0										
	SPECIAL	MERGE NOW	48"x48"	4	4	4	4	4	4	4	4	4	64.0										
*	RSP-1	SHOULDER CLOSED	48"x30"	6	6	6	6	6	6	6	6	6	60.0										
*	R4-1	DO NOT PASS	36"x48"	6	6	6	6	6	6	6	6	6	72.0										
		TRAFFIC DRUMS		379	452	455	361	457	552	410	552			552									
		VERTICAL PANELS		12	30	12	12	12	12	12	30				30								
		TYPE III BARRICADE-RT. (8')				1	1				1	1				8							
		TYPE III BARRICADE-LT. (8')				1	1				1	1					8						
		TYPE III BARRICADE-RT. (16')		1				3	2		3	3				48							
		TYPE III BARRICADE-LT. (16')		1				1	1		1	1					16						
		ADVANCE WARNING ARROW PANEL		2	2	2	2	2	4	4		4						900					
		PORTABLE CHANGEABLE MESSAGE SIGN		2	3	3	3	3	3	3		3							250				
		FURNISHING AND INSTALLING PRECAST CONCRETE BARRIER		13106	4400		9110	9166	270	650	36702									36702			
		TEMPORARY IMPACT ATTENUATION BARRIER		1	2	2	2	2	2	3	3											3	
		TEMPORARY IMPACT ATTENUATION BARRIER (REPAIR)									1												1
		RELOCATING PRECAST CONCRETE BARRIER			7045	2066				14190	23301										23301		
	TOTALS:											2661.5	552	30	56	24	900	250	36702	23301	3	1	

*QUANTITY ESTIMATED - SEE SECTION 104.03 OF THE STANDARD SPECIFICATIONS. TO BE USED IF AND WHERE DIRECTED BY THE ENGINEER.

NOTE: THIS IS A HIGH TRAFFIC VOLUME ROAD AS DEFINED IN SECTION 604.03, STANDARD SPECIFICATIONS FOR HIGHWAY CONSTRUCTION, 2014 EDITION.

STATE OF ARKANSAS
REGISTERED PROFESSIONAL ENGINEER
No. 9808
JAMES L. BARR
4/8/14

QUANTITY SHEETS

r061276.qty.dgn 4/8/2014 11:31:42 AM

DATE REVISED	DATE FILMED	DATE REVISED	DATE FILMED	FED.RD. DIST.NO.	STATE	FED.AID PROJ.NO.	SHEET NO.	TOTAL SHEETS
5/23/14				6	ARK.			
				JOB NO.		061276	127	438

(2) QUANTITY SHEETS

CLEARING AND GRUBBING

STATION	STATION	LOCATION	CLEARING	GRUBBING
			STATION	
534+00	594+00	C.L. CONST. - HWY. 67 - LT. & RT.	60	60
TOTALS:			60	60

NOTE: QUANTITIES SHOWN ABOVE SHALL INCLUDE ANY AND ALL CLEARING AND GRUBBING NEEDED TO CONSTRUCT FRONTAGE ROADS, RAMPS, CROSSING ROADS, AND MAIN LANES.

BENCH MARK CAPS

LOCATION	EACH
BRIDGE NO. 7282	1
BRIDGE NO. 7283	1
TOTAL:	2

NOTE: BENCH MARK CAPS TO BE FURNISHED AND INSTALLED BY STATE FORCES.

REMOVAL & DISPOSAL OF GUARDRAIL

STATION	STATION	LOCATION	LIN. FT.
549+18.00	555+43.00	C.L. CONST. HWY. 67 - RT. - L.M.L.	625
550+93.00	555+43.00	C.L. CONST. HWY. 67 - LT. - R.M.L.	400
552+75.00	555+00.00	C.L. CONST. HWY. 67 - LT. - L.M.L.	175
553+15.00	563+90.00	RT. - RAMP 1 - REDMOND RD.	1025
563+78.00	565+78.00	C.L. CONST. HWY. 67 - RT. - R.M.L.	200
569+93.00	571+93.00	C.L. CONST. HWY. 67 - LT. - R.M.L.	200
586+93.00	588+93.00	C.L. CONST. HWY. 67 - RT. - R.M.L.	200
590+78.00	592+78.00	C.L. CONST. HWY. 67 - LT. - L.M.L.	200
TOTAL:			3025

QUANTITY FOR REMOVAL & DISPOSAL OF GUARDRAIL INCLUDES THE REMOVAL & DISPOSAL OF ANY TERMINAL ANCHOR POSTS.

REMOVAL OF EXISTING ASPHALT OVERLAY

STATION	STATION	LOCATION	AREA
			SQ. YD.
551+00.00	558+69.00	LT./ RT. - C.L. CONST. HWY. 67	4837
553+90.00	566+30.00	RT. - C.L. CONST. HWY. 67	6983
565+60.00	566+30.00	RT. - C.L. CONST. HWY. 67	179
569+50.00	570+50.00	RT. - C.L. CONST. HWY. 67	357
569+60.00	570+25.00	RT. - C.L. CONST. HWY. 67	188
588+00.00	589+20.00	RT. - C.L. CONST. HWY. 67	391
588+30.00	589+00.00	LT. - C.L. CONST. HWY. 67	216
590+50.00	591+20.00	LT. - C.L. CONST. HWY. 67	214
590+70.00	591+70.00	RT. - C.L. CONST. HWY. 67	317
587+50.00	590+20.00	SCHOOL DR.	1047
587+70.00	589+10.00	MAIN ST. RAMP 4	406
TOTAL:			15135

REMOVAL AND DISPOSAL ITEMS

STATION	STATION	LOCATION	PIPE CULVERTS	DROP INLETS	CONCRETE MEDIAN BARRIER	CONCRETE DITCH PAVING	CURB & GUTTER	WIRE ROPE SAFETY FENCE	REMOVING EXIST. P.C.C. PAVEMENT	CONCRETE DRIVEWAYS	CONCRETE ISLANDS	CONCRETE WALKS	DESCRIPTION
			EACH	EACH	LIN.FT.				SQ. YD.				
527+50.00	551+65.00	MEDIAN - HWY. 67						2465					EXISTING WIRE ROPE SAFETY FENCE
527+50.00	551+65.00	MEDIAN - HWY. 67				2465							EXISTING CONCRETE DITCH PAVING
534+00.00	600+00.00	C.L. CONST HWY 67							53068				EXISTING CONCRETE PAVEMENT
554+89.00	606+00.00	MEDIAN - HWY. 67			5111								EXISTING CONCRETE MEDIAN BARRIER
555+52.00	566+43.41	RT. - C.L. CONST. HWY 67							3194				EXISTING REDMOND ROAD RAMP 1 CONCRETE PAVEMENT
555+66.80	566+92.50	LT. - C.L. CONST. HWY 67							2752				EXISTING REDMOND ROAD RAMP 4 CONCRETE PAVEMENT
557+94.00		93' RT. - C.L. CONST. HWY. 67	1	1									DROP INLET WITH 24" x 53' R.C. PIPE AND HEADWALL
558+92.00		28' RT. - C.L. CONST. HWY. 67	1	1									DROP INLET WITH 18" x 67' R.C. PIPE
558+92.00		42' LT. - C.L. CONST. HWY. 67	1	1									DROP INLET WITH 18" x 60' R.C. PIPE AND HEADWALL
559+93.00		88' RT. - C.L. CONST. HWY. 67	1	1									DROP INLET WITH 18" x 67' R.C. PIPE AND HEADWALL
562+86.00		36' RT. - C.L. CONST. HWY. 67	1	1									DROP INLET WITH 18" x 54' R.C. PIPE AND HEADWALL
566+76.00		93' LT. - C.L. CONST. HWY. 67	1										18" x 104' R.C. PIPE WITH HEADWALLS LT. & RT.
571+11.00		45' RT. - C.L. CONST. HWY. 67	1	1									DROP INLET WITH 18" x 82' R.C. PIPE AND HEADWALL
575+50.00	589+07.00	RAMP 4 MAIN ST.							2124				EXISTING MAIN ST. RAMP 4 CONCRETE PAVEMENT
577+64.17	590+14.74	C.L. CONST SCHOOL DRIVE							3708				EXISTING SCHOOL DRIVE CONCRETE PAVEMENT
578+24.86	584+46.11	RAMP 1 MAIN ST.							1174				EXISTING MAIN ST. RAMP 1 CONCRETE PAVEMENT
578+68.00		16' RT. - C.L. SCHOOL DRIVE	1	1									DROP INLET WITH 18" x 169' C.M. PIPE CULVERT
580+47.00		23' RT. - C.L. SCHOOL DRIVE	1	1									DROP INLET WITH 40" x 228' C.M. PIPE CULVERT
582+81.00		24' RT. - C.L. SCHOOL DRIVE		1									DROP INLET
583+99.00		27' RT. - C.L. SCHOOL DRIVE	1										40" x 231' C.M. PIPE CULVERT
584+86.00		RAMP 4 - MAIN ST.	1										32" x 61' R.C. PIPE WITH HEADWALLS LT. & RT.
585+12.00		4' LT. - C.L. CONST. HWY. 67	1	1									DROP INLET WITH 24" x 74' R.C. PIPE AND HEADWALL
585+13.00		34' LT. - C.L. SCHOOL DRIVE	1	1									DROP INLET WITH 24" x 129' C.M. PIPE CULVERT
585+20.00		22' RT. - C.L. SCHOOL DRIVE	1	1									DROP INLET WITH 24" x 50' C.M. PIPE CULVERT
585+85.00		26' RT. - C.L. SCHOOL DRIVE	1										36" x 126' PLASTIC PIPE CULVERT
586+51.00		26' RT. - C.L. SCHOOL DRIVE	1	1									DROP INLET WITH 36" x 56' PLASTIC PIPE CULVERT
586+79.00		13' RT. - C.L. SCHOOL DRIVE								117			EXIST. CONC. DRIVEWAY
587+11.00		24' RT. - C.L. SCHOOL DRIVE	1	1									DROP INLET WITH 36" x 20' C.M. PIPE CULVERT
587+89.00		27' RT. - C.L. SCHOOL DRIVE	1										24" x 57' C.M. PIPE CULVERT WITH HEADWALL
587+90.00		15' RT. - C.L. SCHOOL DRIVE								99			EXIST CONC. DRIVEWAY
588+19.00		19' RT. - C.L. SCHOOL DRIVE	1	1									DROP INLET WITH 24" x 86' C.M. PIPE CULVERT
588+31.81	589+08.55	RAMP 4 MAIN ST.					154						EXISTING CURB & GUTTER
589+04.94	589+65.30	LT. - C.L. CONST. SCHOOL DRIVE					60						EXISTING CURB & GUTTER
589+08.00		18' RT. - C.L. SCHOOL DRIVE	1	1									DROP INLET WITH 24" x 57' C.M. PIPE INLET WITH HEADWALL
589+33.00		16' RT. - C.L. SCHOOL DRIVE								83			EXIST. CONC. DRIVEWAY
591+65.00		4' LT. - C.L. CONST. HWY. 67	1	1									DROP INLET WITH 18" x 98' C.M. PIPE OUTLET
593+95.00		3' LT. - C.L. CONST. HWY. 67	1	1									DROP INLET WITH 18" x 226' OPEN GATE DRAIN IN MEDIAN
593+95.00		C.L. CONST. HWY. 67	1										18" x 76' R.C. PIPE OUTLET WITH HEADWALL
598+92.00		3' LT. - C.L. CONST. HWY. 67	1	1									DROP INLET WITH 18" x 493' OPEN GATE DRAIN IN MEDIAN
598+92.00		61.14' RT. - C.L. CONST. HWY. 67	1	1									DROP INLET WITH 18" x 63' R.C. PIPE OUTLET
197+03.32	197+27.09	RT. - C.L. CONST. MAIN ST.										15	EXIST. CONC. WALK
197+46.00		38' RT. - C.L. CONST. MAIN ST.									23		EXIST. CONC. ISLAND
197+73.57	201+09.61	RT. - C.L. CONST. MAIN ST.										272	EXIST. CONC. WALK
198+24.64	201+59.50	LT. - C.L. CONST. MAIN ST.										307	EXIST. CONC. WALK
198+95.00		C.L. CONST. MAIN ST.	1										24" x 88' R.C. PIPE CULVERT
199+79.00		25' LT. - C.L. CONST. MAIN ST.	1	1									DROP INLET WITH 24" x 29' R.C. PIPE
199+79.00		25' RT. - C.L. CONST. MAIN ST.	1	1									DROP INLET WITH 24" x 114' R.C. PIPE
200+79.00		30' LT. - C.L. CONST. MAIN ST.	1	1									DROP INLET WITH 24" x 63' R.C. PIPE
201+33.00		43' RT. - C.L. CONST. MAIN ST.									84		EXIST. CONC. ISLAND
201+70.00		42' LT. - C.L. CONST. MAIN ST.									82		EXIST. CONC. ISLAND
201+98.85	202+73.24	RT. - C.L. CONST. MAIN ST.										44	EXIST. CONC. WALK
202+31.00		56' LT. - C.L. CONST. MAIN ST.									92		EXIST. CONC. ISLAND
202+57.00		13' LT. - C.L. CONST. MAIN ST.									80		EXIST. CONC. ISLAND
35+75.00		LT. - C.L. CONST. REDMOND ROAD	1										24" x 52' C.M. PIPE LT. SIDE DRAIN
44+00.00		RT. - C.L. CONST. REDMOND ROAD	1										15" x 52' C.M. PIPE RT. SIDE DRAIN
TOTALS:			31	23	5111	2465	214	2465	66020	299	361	638	

NOTE: QUANTITIES SHOWN ABOVE FOR REMOVAL AND DISPOSAL OF PIPE CULVERTS SHALL INCLUDE THE REMOVAL AND DISPOSAL OF ANY HEADWALLS OR FLARED END SECTIONS.

QUANTITIES SHOWN ABOVE FOR REMOVAL AND DISPOSAL OF CONCRETE MEDIAN BARRIER SHALL INCLUDE THE REMOVAL AND DISPOSAL OF ANY GLARE SHIELD MOUNTED TO THE CONCRETE MEDIAN.

EROSION CONTROL

STATION	STATION	LOCATION	PERMANENT EROSION CONTROL								TEMPORARY EROSION CONTROL										SEDIMENT REMOVAL & DISPOSAL
			SEEDING	LIME	MULCH COVER	SECOND SEEDING APPLICATION	SOLID SODDING	WATER	DUMPED RIPRAP	GEOTEXTILE FRABRIC (TYPE 5)	TEMPORARY SEEDING	MULCH COVER	WATER	SAND BAG DITCH CHECKS (E-5)	DROP INLET SILT FENCE (E-7)	DIVERSION DITCHES (E-8)	SILT FENCE (E-11)	SLOPE DRAIN (E-12) PIPE FOR SLOPE DRAINS	SLOPE DRAIN (E-12) DUMPED RIPRAP	
			ACRE	TON	ACRE	ACRE	SQ.YD.	M.GAL.	CU. YD	SQ. YD.	ACRE	ACRE	M.GAL.	BAG	LIN.FT.	LIN. FT.	LIN.FT.	LIN.FT.	CU.YD.	CU. YD.
ENTIRE	PROJECT	STAGE 1 A									2.00	2.00	40.8	462	48		13650			507
ENTIRE	PROJECT	STAGE 1 B							4	7	8.00	8.00	163.2	264	176	973		257	2	7
ENTIRE	PROJECT	STAGE 1 C									1.00	1.00	20.4	22	16		250			10
ENTIRE	PROJECT	STAGE 2													192					7
ENTIRE	PROJECT	STAGE 3 A					913	11.5	3	5	7.00	7.00	142.8	154	240					9
ENTIRE	PROJECT	STAGE 3 B													32					1
ENTIRE	PROJECT	STAGE 3 C	18.00	36.00	18.00	18.00		3672.0							32					1
* ENTIRE PROJECT TO BE USED IF AND WHERE DIRECTED BY THE ENGINEER.			0.50	1.00	0.50	0.50	50	102.6			0.50	0.50	10.2						10	100
TOTALS:			18.50	37.00	18.50	18.50	963	3786.1	7	12	18.50	18.50	377.4	902	736	973	13900	257	12	642

BASIS OF ESTIMATE:
LIME.....2 TONS / ACRE OF SEEDING
WATER.....20.4 M.G. / ACRE OF TEMPORARY SEEDING.
WATER.....12.6 GAL. / SQ. YD. OF SOLID SODDING.
WATER.....102.0 M.G. PER ACRE SEEDING
SAND BAG DITCH CHECKS.....22 BAGS / LOCATION

NOTE: THE TEMPORARY EROSION CONTROL DEVICES SHOWN ABOVE AND ON THE PLANS SHALL BE INSTALLED IN SUCH A SEQUENCE AS TO DETER EROSION AND SEDIMENTATION OF U.S. WATERWAYS AS EXPLAINED BY THE NATIONAL POLLUTANT DISCHARGE ELIMINATION SYSTEM PERMIT.

* QUANTITIES ESTIMATED - SEE SECTION 104.03 OF THE STANDARD SPECIFICATIONS.

STATE OF ARKANSAS
REGISTERED PROFESSIONAL ENGINEER
No. 9808
JAMES L. BARR
5/23/14

QUANTITY SHEETS

r061276.qty.dgn 5/23/2014 8:43:01 AM

DATE REVISED	DATE FILMED	DATE REVISED	DATE FILMED	FED.RD. DIST.NO.	STATE	FED.AID PROJ.NO.	SHEET NO.	TOTAL SHEETS
				6	ARK.			
				JOB NO.		061276	127A	438
				(2)	QUANTITY SHEETS			

REMOVAL AND DISPOSAL ITEMS

STATION	STATION	CENTERLINE LOCATION HWY. 67	DESCRIPTION	SIGNS	BILLBOARDS	SIGN FOUNDATION	LUMINAIRE POLE & FOUNDATION	DECORATIVE LIGHT POLE	FENCE
				EACH	EACH	EACH	EACH	EACH	LF
535+04		RT.	SIGN (ENCROACHING)	1					
536+08		RT.	SIGN (ENCROACHING)	1					
536+08		RT.	SIGN FOUNDATION (ENCROACHING)			1			
539+00		RT.	BILLBOARD SIGN (ENCROACHING)		1				
539+00		RT.	SIGN FOUNDATION (ENCROACHING)			1			
540+18		RT.	SIGN (ENCROACHING)	1					
541+30		LT.	BILLBOARD SIGN (ENCROACHING)		1				
541+30		LT.	SIGN FOUNDATION (ENCROACHING)			1			
554+50		RT.	SIGN (ENCROACHING)	1					
554+50		RT.	SIGN FOUNDATION (ENCROACHING)			1			
556+10		RT.	BILLBOARD SIGN (ENCROACHING)		1				
556+10		RT.	SIGN FOUNDATION (ENCROACHING)			1			
561+78	563+20	RT.	WOOD PRIVACY FENCE						146
578+30	586+20	RT.	LUMINARIES WITH BASE				13		
579+90		RT.	SIGN	1					
582+00		RT.	SIGN	1					
587+00	587+36	RT.	CONCRETE POST 2' TALL W/LIGHTS					3	
583+40		RT.	SIGN FOUNDATION			1			
592+12		RT.	SIGN (ENCROACHING)	1					
592+12		RT.	SIGN FOUNDATION (ENCROACHING)			1			
593+60		RT.	SIGN FOUNDATION (ENCROACHING)			1			
594+90		RT.	SIGN FOUNDATION (ENCROACHING)			1			
595+42		RT.	SIGN FOUNDATION (ENCROACHING)			1			
596+20		RT.	SIGN FOUNDATION (ENCROACHING)			1			
			TOTALS	7	3	11	13	3	146

STATE OF ARKANSAS
REGISTERED PROFESSIONAL ENGINEER
No. 9808
JAMES L. BARR
1/7/14

QUANTITY SHEETS

DATE REVISED	DATE FILMED	DATE REVISED	DATE FILMED
5/23/14			

FED.RD. DIST.NO.	STATE	FED.AID PROJ.NO.	SHEET NO.	TOTAL SHEETS
6	ARK.			
JOB NO.		061276	128	438

(2) QUANTITY SHEETS

EARTHWORK

STATION	STATION	LOCATION	STAGE 1A		STAGE 1B				STAGE 1C			STAGE 2		STAGE 3A				STAGE 3B			STAGE 3C	
			UNCLASSIFIED EXCAVATION	COMPACTED EMBANKMENT	UNCLASSIFIED EXCAVATION	COMPACTED EMBANKMENT	SELECT GRANULAR BACKFILL	SELECTED MATERIAL (CLASS SM-1)	UNCLASSIFIED EXCAVATION	COMPACTED EMBANKMENT	SELECT GRANULAR BACKFILL	UNCLASSIFIED EXCAVATION	COMPACTED EMBANKMENT	UNCLASSIFIED EXCAVATION	COMPACTED EMBANKMENT	SELECT GRANULAR BACKFILL	SELECTED MATERIAL (CLASS SM-1)	UNCLASSIFIED EXCAVATION	COMPACTED EMBANKMENT	SELECT GRANULAR BACKFILL	UNCLASSIFIED EXCAVATION	COMPACTED EMBANKMENT
			CU. YD.		CU. YD.				CU. YD.			CU. YD.		CU. YD.				CU. YD.			CU. YD.	
534+00.00	600+00.00	HWY. 67	3640	1532	5616	99841	19226	597	115	8698	532	192	24466	5215	76865	8462	234	425	3275	1277	1491	0
558+25.06	566+80.60	RAMP 1 - REDMOND RD.												3981	962							
548+48.32	567+73.48	RAMP 4 - REDMOND RD.	44	12824	3398	26873																
575+09.62	581+51.76	RAMP 1 - MAIN ST.												123	1915			202	14			
583+21.88	589+08.49	RAMP 4 - MAIN ST.							623	2084	1941											
32+59.49	46+28.36	REDMOND RD.			2273	2848																
194+00.00	203+50.00	MAIN ST.												694	92							
577+64.77	590+18.47	SCHOOL DR.												402	601			1294	276			
TOTALS:			3684	14356	11287	129562	19226	597	738	10782	2473	192	24466	10415	80435	8462	234	1921	3565	1277	1491	0

SUMMARY OF EARTHWORK

DESCRIPTION	UNCLASSIFIED EXCAVATION	COMPACTED EMBANKMENT	SELECT GRANULAR BACKFILL	SELECTED MATERIAL (CLASS SM-1)	SOIL STABILIZATION
	CU. YD.				TON
STAGE 1A	3684	14356			
STAGE 1B	11287	129562	19226	597	
STAGE 1C	738	10782	2473		
STAGE 2	192	24466			
STAGE 3A	10415	80435	8462	234	
STAGE 3B	1921	3565	1277		
STAGE 3C	1491	0			
BRIDGE EXCAVATION	7321				
CHANNEL CHANGE EXCAVATION	383				
DRIVEWAYS - ENTIRE PROJECT		50			
TEMPORARY RETAINING WALLS	3000		8078		
* ENTIRE PROJECT					100
TOTALS:	40432	263216	39516	831	100

* QUANTITY ESTIMATED - SEE SECTION 104.03 OF THE STANDARD SPECIFICATIONS.

COLD MILLLING ASPHALT PAVEMENT

STATION	STATION	LOCATION	AVG. WIDTH	COLD MILLING ASPHALT PAVEMENT
			FEET	SQ. YD.
* ENTIRE PROJECT-TO BE USED IF AND WHERE DIRECTED BY THE ENGINEER				1500
TOTAL:				1500

NOTE: AVERAGE MILLING DEPTH 1".

* QUANTITY ESTIMATED - SEE SECTION 104.03 OF THE STANDARD SPECIFICATIONS.

WHEELCHAIR RAMPS

STATION	SIDE	LOCATION	TYPE 3	TYPE 4
			SQ. YD.	
197+17.31	RT.	MAIN ST.	4	
197+85.24	RT.	MAIN ST.		6
198+50.40	LT.	MAIN ST.		7
201+18.70	RT.	MAIN ST.		8
201+58.13	LT.	MAIN ST.		8
202+07.94	RT.	MAIN ST.		7
202+61.07	RT.	MAIN ST.		8
TOTALS:			4	44

WIRE ROPE SAFETY FENCE

STATION	STATION	DESCRIPTION	WIRE ROPE SAFETY FENCE	SOLID SODDING	WATER
			LIN. FT.	SQ. YD.	M. GAL.
527+50	530+50	C.L. CONST. HWY 67 - TRANS. C.L. MEDIAN TO LT. OF RT. LANES	300	66.7	0.84
530+50	533+50	C.L. CONST. HWY 67 - LT. OF RT. LANES	300	66.7	0.84
536+50	545+60	C.L. CONST. HWY 67 - RT. OF LT. LANES	910	202.2	2.55
TOTAL:			1510	335.6	4.23

BASIS OF ESTIMATE: WATER.....12.6 GAL. / SQ. YD. OF SOLID SODDING.

DRIVEWAYS & TURNOUTS

STATION	SIDE	LOCATION	WIDTH	**MODIFIED CURB		PORTLAND CEMENT CONCRETE DRIVEWAY	ACHM SURFACE COURSE (1/2") 220 LBS. PER SQ. YD. (PG 64-22)		AGGREGATE BASE COURSE (CLASS 7)
			FEET	STATION	STATION	SQ. YD.	SQ. YD.	TON	TON
35+75	LT.	C.L. CONST. REDMOND RD.	24				207.3	22.8	84.6
44+00	RT.	C.L. CONST. REDMOND RD.	24				108.2	11.9	
198+00	LT.	C.L. CONST. MAIN ST.	58				923.0	101.5	
202+00	LT.	C.L. CONST. MAIN ST.	24				1260.8	138.7	
586+80	RT.	C.L. CONST. SCHOOL RD.	48	586+41	587+17	98			
587+90	RT.	C.L. CONST. SCHOOL RD.	49	587+51	588+28	102			
589+31	RT.	C.L. CONST. SCHOOL RD.	38	588+99	589+64	75			
* ENTIRE PROJECT TEMPORARY DRIVES									20.0
TOTALS:						275	2499.3	274.9	104.6

BASIS OF ESTIMATE:
ACHM SURFACE COURSE (1/2").....95.0% MIN. AGGR.....5.0% ASPHALT BINDER
MAXIMUM NUMBER OF GYRATIONS = 115 FOR PG 64-22

** FOR INFORMATION ONLY

* QUANTITY ESTIMATED - SEE SECTION 104.03 OF THE STANDARD SPECIFICATIONS.
TO BE USED IF AND WHERE DIRECTED BY THE ENGINEER.

THE CONTRACTOR, WITH THE APPROVAL OF THE ENGINEER, WILL BE ALLOWED TO SUBSTITUTE A HIGHER PERFORMANCE GRADE ASPHALT SURFACE COURSE FOR DRIVEWAYS AND MINOR SIDE STREET CONSTRUCTION AT NO ADDITIONAL COST TO THE DEPARTMENT.

Nmax = 115 (PG 64-22)

PAVEMENT REPAIR OVER CULVERTS (ASPHALT)

STATION	LOCATION	WIDTH	LENGTH	TON
		FEET		
37+70	C.L. CONST. REDMOND ROAD	4	22	6
40+25	C.L. CONST. REDMOND ROAD	4	22	6
43+49	C.L. CONST. REDMOND ROAD	4	22	6
197+34	C.L. CONST. MAIN STREET	4	56	16
198+85	C.L. CONST. MAIN STREET	6	66	29
199+10	C.L. CONST. MAIN STREET	12	56	49
200+79	C.L. CONST. MAIN STREET	6	56	25
201+41	C.L. CONST. MAIN STREET	6	94	41
TOTAL:				178

WIRE ROPE SAFETY FENCE (POST REPAIR)

STATION	STATION	DESCRIPTION	EACH
* ENTIRE PROJECT-TO BE USED IF AND WHERE DIRECTED BY THE ENGINEER			50
TOTAL:			50

* QUANTITY ESTIMATED - SEE SECTION 104.03 OF THE STANDARD SPECIFICATIONS

BASE AND SURFACING - GUARDRAIL WIDENING

STATION	STATION	LOCATION	LENGTH	AGGREGATE BASE COURSE (CLASS 7)		ACHM SURFACE COURSE (1/2")			
				TON / STATION	TON	AVG. WID.	SQ.YD.	POUND / SQ.YD.	PG 64-22 TON
			FEET			FEET			
561+72	565+83	GUARDRAIL RT. OF NB HWY. 67	411.0	VAR.	224.0	VAR.	241.1	220.0	26.5
559+32	564+43	GUARDRAIL RT. OF RAMP 1 OF REDMOND RD.	511.0	VAR.	236.8	VAR.	292.1	220.0	32.1
TOTALS:					460.8		533.2		58.6

BASIS OF ESTIMATE: ACHM SURFACE COURSE (1/2") - MINERAL AGGREGATE = 95.0%, ASPHALT BINDER (PG 64-22) = 5.0%
Nmax = 115 (PG 64-22)

STATE OF ARKANSAS
REGISTERED PROFESSIONAL ENGINEER
No. 9808
JAMES L. BARR
5/23/14

QUANTITY SHEETS

DATE REVISED	DATE FILMED	DATE REVISED	DATE FILMED	FED.RD. DIST.NO.	STATE	FED.AID PROJ.NO.	SHEET NO.	TOTAL SHEETS
				6	ARK.			
				JOB NO.		061276	129	438

(2) QUANTITY SHEETS

STRUCTURES

STATION	LOCATION	DESCRIPTION	R.C. PIPE CULVERT (CLASS III)				R.C. PIPE CULVERT (CLASS IV)		R.C. PIPE CULVERT (CLASS V)		ALUMINUM COATED CORRUGATED STEEL PIPE CULVERTS (16 GAUGE)	ALTERNATE PIPE CULVERTS FOR STORM SEWER				SIDE DRAINS		FLARED END SECTIONS FOR R.C. PIPE CULVERTS		DROP INLETS				DROP INLET EXTENSIONS		DROP INLETS ADJUSTED TO GRADE	JUNCTION BOX TYPE "E"	MODIFYING DROP INLETS	SOLID SODDING	WATER	STANDARD DRAWINGS
			18"	24"	36"	42"	24"	36"	24"	36"	18"	18"	24"	36"	42"	48"	18"	24"	18"	24"	TYPE "ST"	TYPE "RM"	TYPE "MO"	TYPE "E"	4'	8'				S.Y.	MG	
			LIN. FT.																		EACH											
539+63	C.L. CONST.	ADJUST TYPE "TM" DROP INLET TO GRADE																									1					FPC-9, FPC-9D
547+50	C.L. CONST.	CONST. TYPE "ST" DROP INLET ALONG BARRIER WALL W/RC PIPE OUTLET W/F.E.S. RT.		96																1	1									8	0.10	FES-1, FES-2, FPC-9S, PCC-1
550+05	C.L. CONST.	CONST. TYPE "ST" DROP INLET ALONG BARRIER WALL W/RC PIPE OUTLET RT.		6																	1											FPC-9S, PCC-1
552+50	C.L. CONST.	CONST. TYPE "ST" DROP INLET ALONG BARRIER WALL W/RC PIPE OUTLET RT.		90																1	1									8	0.10	FPC-9S, FES-1, FES-2, PCC-1
554+50	C.L. CONST.	CONST. TYPE "ST" DROP INLET ALONG BARRIER WALL W/RC PIPE OUTLET RT.		92																1	1									8	0.10	FPC-9S, FES-1, FES-2, PCC-1
558+59	C.L. CONST.	CONST. 24" RC PIPE CULVERT FOR MOT		92																												PCC-1
560+00	C.L. CONST.	CONST. TYPE "ST" DROP INLET ALONG BARRIER WALL W/RC PIPE OUTLET LT.		78																1	1									8	0.10	FPC-9S, FES-1, FES-2, PCC-1
563+50	RAMP 4	CONST. 24" RC PIPE CULVERT W/FES LT. & RT.		88																2										16	0.20	FES-1, FES-2, PCC-1
567+00	RAMP 4	CONST. 24" RC PIPE CULVERT W/FES LT. & RT.		86																2										16	0.20	FES-1, FES-2, PCC-1
565+50	C.L. CONST.	CONST. TYPE "ST" DROP INLET ALONG BARRIER WALL W/RC PIPE OUTLET LT.		78																1	1									8	0.10	FPC-9S, FES-1, FES-2, PCC-1
569+50	C.L. CONST.	CONST. TYPE "ST" DROP INLET ALONG BARRIER WALL W/RC PIPE CULVERT		98																	1											FPC-9S, PCC-1
570+50	C.L. CONST.	CONST. TYPE "ST" DROP INLET ALONG BARRIER WALL W/RC PIPE OUTLET RT.		84																1	1									8	0.10	FPC-9S, FES-1, FES-2, PCC-1
557+52.95	RAMP 1	CONST. TYPE "RM" DROP INLET W/RC PIPE CULVERT OUTLET THROUGH MSE WALL								204												1										FPC-9D, PCC-1, SPECIAL PROVISION
578+50	SCHOOL DR.	REMOVE C.M. PIPE & EXTEND C.M. PIPE AND CONNECT TO DROP INLET									8																					PCM-1
579+08	C.L. CONST.	REMOVE HDWL. AND EXTEND RC PIPE OUTLET THROUGH MSE WALL				50																										PCC-1
579+50	RAMP 1	CONST. TYPE "ST" DROP INLET W/RC PIPE CULVERT CONNECT TO EXIST. D.I.					38														1											FPC-9S, PCC-1
579+75	SCHOOL DR.	CONST. DROP INLET W/PIPE CULVERT TO DROP INLET												108									1									FPC-9E, FPC-9M, PCC-1, PCM-1
579+90	RAMP 1	ADJUST EX. DROP INLET																									1					FPC-9
580+47	SCHOOL DR.	CONST. TYPE "RM" DROP INLET W/RC PIPE CULVERT TO DROP INLET			68																	1										FPC-9D, PCC-1
581+58	SCHOOL DR.	CONST. TYPE "ST" DROP INLET W/PIPE CULVERT		28																	1											FPC-9S, PCC-1
581+80	SCHOOL DR.	CONST. DROP INLET W/PIPE CULVERT TO DROP INLET														126							1		1							FPC-9E, FPC-9M, PCC-1, PCM-1
584+00	RAMP 4	CONST. TYPE "ST" DROP INLET W/RC PIPE CULVERT OUTLET THROUGH MSE WALL		36																	1											FPC-9S, PCC-1
584+50	C.L. CONST.	CONST. TYPE "ST" DROP INLET W/RC PIPE CULVERT CONNECT TO D.I.		80																	1											FPC-9S, PCC-1
585+50	RAMP 4	CONST. TYPE "E" JUNCT. BOX W/RC PIPE CULVERT OUTLET THROUGH MSE WALL						90																				1				FPC-9E, PCC-1
585+50	C.L. CONST.	CONST. TYPE "ST" DROP INLET ALONG BARRIER WALL W/RC PIPE CULVERT CONNECT TO D.I.		96																	1											FPC-9S, PCC-1
578+56	SCHOOL DR.	CONST. TYPE "RM" DROP INLET W/RC PIPE CULVERT OUTLET TO D.I.			110																	1										FPC-9D, PCC-1
582+70	SCHOOL DR.	CONST. DROP INLET W/PIPE CULVERT TO DROP INLET														86							1		1							FPC-9E, FPC-9M, PCC-1, PCM-1
584+75	SCHOOL DR.	CONST. DROP INLET WITH PIPE CULVERT TO DROP INLET														200							1			1						FPC-9E, FPC-9M, PCC-1, PCM-1
585+00	SCHOOL DR.	CONST. TYPE "ST" DROP INLET W/RC PIPE CULVERT TO DROP INLET		52																	1											FPC-9S, PCC-1
587+30	SCHOOL DR.	CONST. DROP INLET WITH PIPE CULVERT TO DROP INLET														248							1		1							FPC-9E, FPC-9M, PCC-1, PCM-1
587+30	SCHOOL DR.	CONST. PIPE CULVERT CONNECT EXIST. DROP INLET TO DROP INLET										6																				PCC-1, PCM-1
588+00	C.L. CONST.	CONST. TYPE "ST" DROP INLET ALONG BARRIER WALL W/RC PIPE CULVERT OUTLET		86																1	1									8	0.10	FPC-9S, FES-1, FES-2, PCC-1
588+59.54	RAMP 4	REMOVE HDWL. AND EXTEND RC PIPE OUTLET	42																1											5	0.06	FES-1, FES-2, PCC-1
588+80	RAMP 4	CONST. TYPE "E" DROP INLET W/RC PIPE CULVERT TO DROP INLET						332																1								FPC-9, PCC-1
589+68	SCHOOL DR.	CONST. DROP INLET WITH PIPE CULVERT TO DROP INLET													234								1									FPC-9E, FPC-9M, PCC-1, PCM-1
589+95	SCHOOL DR.	CONST. JUNCTION BOX WITH PIPE CULVERT TO DROP INLET												30														1				FPC-9, PCC-1, PCM-1
590+02.82	SCHOOL DR.	REMOVE HDWL. AND EXTEND RC PIPE OUTLET AND CONNECT TO DROP INLET		8																												PCC-1
590+17.26	SCHOOL DR.	CONST. PIPE CULVERT TO DROP INLET												30																		PCC-1
591+60	C.L. CONST.	CONST. TYPE "ST" DROP INLET ALONG BARRIER WALL W/RC PIPE CULVERT OUTLET		84																1	1									8	0.10	FPC-9S, FES-1, FES-2, PCC-1
595+00	C.L. CONST.	CONST. TYPE "ST" DROP INLET ALONG BARRIER WALL W/RC PIPE CULVERT OUTLET THRU MSE WALL						68													1											FPC-9S, PCC-1
597+10	C.L. CONST.	CONST. TYPE "ST" DROP INLET ALONG BARRIER WALL W/RC PIPE CULVERT CONNECT TO D.I.		206																	1											FPC-9S, PCC-1
599+00	C.L. CONST.	CONST. TYPE "ST" DROP INLET ALONG BARRIER WALL W/RC PIPE CULVERT CONNECT TO D.I.		188																	1											FPC-9S, PCC-1
599+00	C.L. CONST.	CONST. TYPE "RM" DROP INLET W/RC PIPE CULVERT CONNECT TO DI							60													1										FPC-9D, PCC-1
37+70	REDMOND RD.	CONST. DROP INLET W/PIPE CULVERT TO DROP INLET	38																				1			1						FPC-9E, FPC-9M, PCC-1
37+70	REDMOND RD.	CONST. DROP INLET W/RC PIPE CULVERT		36																1			1			1				8	0.10	FPC-9E, FPC-9M, FES-1, FES-2, PCC-1
35+75	REDMOND RD.	INSTALL PIPE CULVERT LT. SIDE DRAIN																68														PCC-1, PCM-1
40+25	REDMOND RD.	CONST. DROP INLET W/RC PIPE CULVERT TO DROP INLET	38																				1									FPC-9E, FPC-9M, PCC-1
40+25	REDMOND RD.	CONST. DROP INLET W/ PIPE CULVERT TO DROP INLET											252										1									FPC-9E, FPC-9M, PCC-1, PCM-1
43+50	REDMOND RD.	CONST. DROP INLET W/RC PIPE CULVERT	52																1				1							5	0.06	FPC-9E, FPC-9M, FES-1, FES-2, PCC-1
41+27.74	REDMOND RD.	CONST. RC PIPE INLET TO DROP INLET		96																1										8	0.10	FES-1, FES-2, PCC-1
44+00	REDMOND RD.	INSTALL PIPE CULVERT SIDE DRAIN															52															PCC-1, PCM-1
199+10	MAIN ST.	CONST. RC PIPE INLET TO DROP INLET		12																1										8	0.10	FES-1, FES-2, PCC-1
199+10	MAIN ST.	CONST. RC PIPE CULVERT TO DROP INLET		144																			1		1							FPC-9E, FPC-9M, PCC-1
199+10	MAIN ST.	CONST. DROP INLET W/RC PIPE OUTLET CONNECT TO DROP INLET			58																		1									FPC-9E, FPC-9M, PCC-1
200+00	MAIN ST.	CONST. DROP INLET W/PIPE CULVERT TO DROP INLET										86											1		2							FPC-9E, FPC-9M, PCC-1, PCM-1
200+60	MAIN ST.	CONST. DROP INLET W/PIPE CULVERT TO DROP INLET										56											1		1							FPC-9E, FPC-9M, PCC-1, PCM-1
201+70	MAIN ST.	CONST. DROP INLET W/RC PIPE CULVERT TO DROP INLET		154																				1								FPC-9, PCC-1
549+95	C.L. CONST.	MODIFY TYPE "TM" DROP INLET IN MEDIAN																											1			FPC-9, FPC-9D
200+00	MAIN ST.	CONST. DROP INLET W/PIPE CULVERT TO DROP INLET										86											1		1							FPC-9E, FPC-9M, PCC-1, PCM-1
TOTALS:			170	2194	236	50	106	422	60	204	8	228	258	168	234	660	52	68	2	15	19	4	16	2	8	3	2	2	1	130	1.62	

BASIS OF ESTIMATE:
WATER..... 12.6 GAL. / SQ. YD. OF SOLID SODDING.

NOTE: FOR R.C. PIPE CULVERT INSTALLATIONS, USE TYPE 3 BEDDING UNLESS OTHERWISE SPECIFIED.
FOR C.M. PIPE CULVERT INSTALLATIONS, USE TYPE 2 BEDDING UNLESS OTHERWISE SPECIFIED.

STATE OF ARKANSAS
REGISTERED PROFESSIONAL ENGINEER
No. 9808
JAMES L. BARR
8/26/13

QUANTITY SHEETS

r061276.qty.dgn 8/20/2013 3:44:13 PM

DATE REVISED	DATE FILMED	DATE REVISED	DATE FILMED	FED.RD. DIST.NO.	STATE	FED.AID PROJ.NO.	SHEET NO.	TOTAL SHEETS
				6	ARK.			
				JOB NO.		061276	130	438

(2) QUANTITY SHEETS

APPROACH GUTTERS

BRIDGE NUMBER	LOCATION	APPROACH GUTTERS										REINFORCING STEEL - ROADWAY (GRADE 60)	AGGREGATE BASE COURSE (CLASS 7)	12" ZINC COATED (GALVANIZED) CORR. STEEL PIPE CULVERT (16 GAUGE)	CONCRETE SPILLWAY (TYPE A)	DROP INLET (TYPE N2)	STANDARD DRAWING NUMBER
		TYPE C	TYPE 1 SPECIAL	TYPE 2A SPECIAL	TYPE 2B SPECIAL	TYPE 3A SPECIAL	TYPE 3B SPECIAL	TYPE 4A SPECIAL	TYPE 4B SPECIAL	TYPE 5A SPECIAL	TYPE 5B SPECIAL						
		CUBIC YARDS										POUND	TON	LIN. FT.	EACH		
7282A	LT. - LT. MAIN LANES	18.06	22.25									3164	32.6	80	1	1	2016C, FPC-9N
7282A & 7282B	MEDIAN - HWY. 67			30.66	31.67							5210	39.1				SPECIAL DETAIL
7282B	RT. - RT. MAIN LANES	23.04										1246	20.4				2016C
7283A	LT. - LT. MAIN LANES					14.93	14.24					2887	20.7				SPECIAL DETAIL
7283A & 7283B	MEDIAN - HWY. 67									33.34	35.33	5963	42.7				SPECIAL DETAIL
7283B	RT. - RT. MAIN LANES							20.33	22.40			4206	32.5				SPECIAL DETAIL
TOTALS:		41.10	22.25	30.66	31.67	14.93	14.24	20.33	22.40	33.34	35.33	22676	188.0	80	1	1	

APPROACH SLABS

BRIDGE NUMBER	LOCATION	APPROACH SLABS								REINFORCING STEEL - ROADWAY (GRADE 60)	AGGREGATE BASE COURSE (CLASS 7)	STANDARD DRAWING NUMBER
		TYPE 1 SPECIAL	TYPE 2 SPECIAL	TYPE 3 SPECIAL	TYPE 4 SPECIAL	TYPE 5 SPECIAL	TYPE 6 SPECIAL	TYPE 7 SPECIAL	TYPE 8 SPECIAL			
		CUBIC YARDS								POUND	TON	
7282A	LT. MAIN LANES	53.84	56.79							12558	71.1	SPECIAL DETAIL
7282B	RT. MAIN LANES			74.23	79.28					17550	99.8	SPECIAL DETAIL
7283A	LT. MAIN LANES					82.52	90.65			20144	116.5	SPECIAL DETAIL
7283B	RT. MAIN LANES							58.92	63.64	14133	81.1	SPECIAL DETAIL
TOTALS:		53.84	56.79	74.23	79.28	82.52	90.65	58.92	63.64	64385	368.5	

CONCRETE DITCH PAVING

STATION	STATION	LOCATION	LENGTH	TYPE A			TYPE B		SOLID SODDING	WATER
				"B"	"W"	SQUARE YARDS	"W"	SQUARE YARDS		
			LIN. FT.	FEET			FEET		SQ. YD.	M. GAL.
538+70.00	539+43.00	LT. - L.M.L	73.00				8	64.9	32.4	0.41
539+43.00	539+63.00	LT. - L.M.L	20.00				12	26.7	8.9	0.11
539+63.00	541+50.00	LT. - L.M.L	28.00	6	16	49.8			12.4	0.16
547+50.00	547+50.00	RT. - R.M.L	28.00				4	12.4	12.4	0.16
552+50.00	552+50.00	RT. - R.M.L	25.00				4	11.1	11.1	0.14
554+50.00	554+50.00	RT. - R.M.L	18.00				4	8.0	8.0	0.10
560+00.00	560+00.00	LT. - L.M.L	32.00				4	14.2	14.2	0.18
550+20.00	564+50.00	LT. - RAMP 4 - REDMOND RD.	1430.00				10	1588.9	635.6	8.01
560+10.00	566+27.00	LT. - RAMP 1 - REDMOND RD.	617.00				4	274.2	137.1	1.73
560+10.00	566+27.00	LT. - RAMP 1 - REDMOND RD.	617.00				8	548.4	137.1	1.73
566+27.00	566+69.00	LT. - RAMP 1 - REDMOND RD.	45.00				10	50.0	20.0	0.25
565+50.00	565+50.00	LT. - L.M.L	54.00				4	24.0	24.0	0.30
570+50.00	570+53.00	RT. - R.M.L	49.00				4	21.8	21.8	0.27
570+60.00	580+00.00	LT. - L.M.L	940.00				4	417.8	208.9	2.63
578+00.00	581+52.00	LT. - RAMP 1 - MAIN ST.	352.00				8	312.9	78.2	0.99
581+97.00	588+16.00	LT. - RAMP 4 - MAIN ST.	619.00				4	275.1	137.6	1.73
588+16.00	588+16.00	LT. - RAMP 4 - MAIN ST.	6.00				6	4.0	2.7	0.03
584+92.00	588+21.00	RT. - R.M.L	326.00				4	144.9	72.4	0.91
588+00.00	588+00.00	LT. - L.M.L	50.00				4	22.2	22.2	0.28
581+53.00	588+08.00	LT. - SCHOOL DR.	655.00				8	582.2	145.6	1.83
588+08.00	588+70.00	LT. - SCHOOL DR.	62.00				6	41.3	13.8	0.17
591+60.00	591+60.00	LT. - L.M.L	50.00				4	22.2	22.2	0.28
592+70.00	595+50.00	RT. - R.M.L	280.00				4	124.4	62.2	0.78
36+18.00	37+32.00	RT. REDMOND RD.	122.00				6	81.3	54.2	0.68
45+63.00	45+63.00	RT. REDMOND RD.	9.00				6	6.0	4.0	0.05
46+43.00	46+43.00	LT. REDMOND RD.	8.00				6	5.3	3.6	0.05
* ENTIRE PROJECT - IF AND WHERE DIRECTED BY ENGINEER								250.0	500.0	6.30
TOTALS:						49.8		4934.2	2402.6	30.26

BASIS OF ESTIMATE: WATER..... 12.6 GAL. / SQ. YD. OF SOLID SODDING.

* NOTE: QUANTITIES ESTIMATED - SEE SECTION 104.03 OF THE STANDARD SPECIFICATIONS.

CONCRETE WALKS - CURB - CURB & GUTTER

STATION	SIDE	LOCATION	STATION	SIDE	LOCATION	CONCRETE WALKS		CONCRETE COMB. CURB & GUTTER (TYPE A) (1'-6")	INTEGRAL CURB (TYPE A)
						WIDTH	SQUARE YARDS		
						FEET		LIN.FT.	LIN.FT.
35+88.00	LT.	REDMOND RD. RADIUS	46+42.00	LT.	REDMOND RD.			1060	
36+17.00	RT.	REDMOND RD.	41+45.00	RT.	REDMOND RD.			528	
43+28.36	RT.	REDMOND RD.	43+96.00	RT.	REDMOND RD. RADIUS			85	
44+22.00	RT.	REDMOND RD. RADIUS	45+60.00	RT.	REDMOND RD.			165	
577+64.17	LT.	SCHOOL DRIVE	579+52.96	LT.	SCHOOL DRIVE				189
577+64.17	RT.	SCHOOL DRIVE	202+74.00	RT.	MAIN ST.	5	616		1320
193+80.63	RT.	MAIN ST.	196+51.69	RT.	MAIN ST.			271	
197+86.29	RT.	MAIN ST.	201+20.21	RT.	MAIN ST.			334	
588+53.41	RT.	RAMP 4 - MAIN ST.	589+08.95	RT.	RAMP 4 - MAIN ST.				56
588+65.36	LT.	RAMP 4 - MAIN ST.	589+05.32	LT.	RAMP 4 - MAIN ST.				100
345+70.00	RT.	MARSHALL RD.	101+70.00	LT.	T.P. WHITE DRIVE			510	
345+70.00	RT.	MARSHALL RD.	100+67.00	LT.	T.P. WHITE DRIVE	5	217		
101+70.00	LT.	T.P. WHITE DRIVE	109+26.00	LT.	T.P. WHITE DRIVE			756	
197+02.92	RT.	MAIN ST.	197+17.73	RT.	MAIN ST.	5	8		
TOTALS:							841	3709	1665

STATE OF ARKANSAS REGISTERED PROFESSIONAL ENGINEER No. 9808 JAMES L. BARR 8/20/13

QUANTITY SHEETS

DATE REVISED	DATE FILMED	DATE REVISED	DATE FILMED	FED.RD. DIST.NO.	STATE	FED.AID PROJ.NO.	SHEET NO.	TOTAL SHEETS
5/23/14				6	ARK.			
				JOB NO.		061276	131	438

(2) QUANTITY SHEETS

RETAINING WALL

STATION	STATION	LOCATION	DESIGNATION	LENGTH LIN. FT.	SQUARE FOOT
578+08.92	579+51.02	LT. - SCHOOL DRIVE	GW-1	142.1	564
TOTAL:					564

MSE RETAINING WALL

STATION	STATION	LOCATION	DESIGNATION	LENGTH LIN. FT.	SQUARE FOOT
560+20.00	565+89.83	C.L. CONST. HWY. 67 - RT. - R.M.L.	MW-1	569.83	9173
38+00.00	46+28.36	LT. - REDMOND RD.	MW-2	828.36	7142
570+60.00	580+00.00	C.L. CONST. HWY. 67 - LT. - L.M.L.	MW-3	940.00	14444
576+50.00	588+13.32	C.L. CONST. HWY. 67 - RT. - R.M.L.	MW-4	1163.32	13920
581+95.00	587+80.07	LT. - RAMP 4 - MAIN ST.	MW-5	585.07	7320
594+00.00	599+25.00	C.L. CONST. HWY. 67 - LT. - L.M.L.	MW-6	525.00	10133
593+00.00	595+00.00	C.L. CONST. HWY. 67 - RT. - R.M.L.	MW-7	200.00	1748
TOTAL:					63880

TEMPORARY RETAINING WALL

STATION	STATION	LOCATION	LENGTH LIN. FT.				SQUARE FOOT SQ. FT.				SELECT GRANULAR BACKFILL CU. YD.			
			STAGE 1B	STAGE 1C	STAGE 2	STAGE 3A	STAGE 1B	STAGE 1C	STAGE 2	STAGE 3A	STAGE 1B	STAGE 1C	STAGE 2	STAGE 3A
537+00.00	554+00.00	C.L. CONST. HWY. 67 - RT. - L.M.L.	1700				8890				1317			
561+00.00	566+00.00	C.L. CONST. HWY. 67 - RT. - L.M.L.	500				3217				595			
566+00.00	584+00.00	C.L. CONST. HWY. 67 - RT. - L.M.L.	1800				9532				1413			
584+00.00	588+00.00	C.L. CONST. HWY. 67 - RT. - L.M.L.	400				2232				331			
591+00.00	600+00.00	C.L. CONST. HWY. 67 - RT. - L.M.L.	900				3698				411			
552+50.00	561+00.00	C.L. CONST. HWY. 67 - RT. - L.M.L.		850				5023				837		
579+50.00	584+00.00	C.L. CONST. HWY. 67 - RT. - L.M.L.		450				2201				326		
538+00.00	565+70.00	C.L. CONST. HWY. 67 - RT.			2770				13249				1716	
569+45.00	588+00.00	C.L. CONST. HWY. 67 - RT.			1855				7511				835	
591+00.00	600+00.00	C.L. CONST. HWY. 67 - LT.			900				3040				282	
573+30.00	576+00.00	C.L. CONST. HWY. 67 - RT.				270				414				15
TOTALS:							27569	7224	23800	414	4067	1163	2833	15

GUARDRAIL (TYPE A)

STATION	STATION	LOCATION	GUARDRAIL (TYPE A) LIN.FT.	GUARDRAIL TERMINAL (TYPE 2) EACH	THRIE BEAM GUARDRAIL TERMINAL EACH	TERMINAL ANCHOR POSTS (TYPE 1) EACH
559+75.00	564+00.00	RT. - RAMP 1 - REDMOND RD.	375	1		1
562+15.05	565+83.80	C.L. CONST. HWY. 67 - RT. - R.M.L.	300	1	1	
TOTALS:			675	2	1	1

NOTE: SEE SIGNING QUANTITIES FOR ADDITIONAL GUARDRAIL QUANTITIES.

STRUCTURES OVER 20'-0" SPAN

STATION	LOCATION	DESCRIPTION	SPAN	HEIGHT	LENGTH	CLASS S CONCRETE - ROADWAY	REINFORCING STEEL - ROADWAY (GRADE 60)	UNCLASSIFIED EXCAVATION FOR STRUCTURES - ROADWAY	SOLID SODDING	WATER	STANDARD DRAWINGS
			LIN. FT.			CU. YD.	POUND	CU. YD.	SQ. YD.	M. GAL.	
539+63	C.L. CONST. HWY. 67	EXTEND DOUBLE R.C. BOX CULVERT	10	7	188	79.21	8806	44.2	26.7	0.34	R-200X - X2, W- X003 -1, RCB - 1, RCB - 2, RCB -3
549+95	C.L. CONST. HWY. 67	EXTEND TRIPLE R.C. BOX CULVERT	10	6	186	178.18	25953	82.4	29.5	0.37	R-300X - X2, W- X003 -1, RCB - 1, RCB - 2, RCB -3
TOTALS:						257.39	34759	126.6	56.2	0.71	

BASIS OF ESTIMATE: WATER..... 12.6 GAL. / SQ. YD. OF SOLID SODDING.

4" PIPE UNDERDRAIN

	LOCATION	4" PIPE UNDERDRAINS LIN.FT.	UNDERDRAIN OUTLET PROTECTORS EACH
*	TO BE USED IF AND WHERE DIRECTED BY THE ENGINEER	1000	5
	TOTALS:	1000	5

* NOTE: QUANTITIES ESTIMATED - SEE SECTION 104.03 OF THE STANDARD SPECIFICATIONS.

ASPHALT CONCRETE PATCHING FOR MAINTENANCE OF TRAFFIC

LOCATION	ASPHALT CONCRETE PATCHING TON	TACK COAT GALLON
TO BE USED IF AND WHERE DIRECTED BY THE ENGINEER	100	200
TOTALS:	100	200

BASIS OF ESTIMATE: ASPHALT CONCRETE PATCHING.....25 TONS/MI.
TACK COAT.....50 GAL./MI.

SELECTED PIPE BEDDING

	LOCATION	SELECTED PIPE BEDDING CU.YD.
*	TO BE USED IF AND WHERE DIRECTED BY THE ENGINEER	100
	TOTAL:	100

* NOTE: QUANTITY ESTIMATED - SEE SECTION 104.03 OF THE STANDARD SPECIFICATIONS.

CONCRETE BARRIER WALLS

	STATION	STATION	LOCATION	SIDE TYPE A	MEDIAN TYPE A	PARAPET TYPE B	PARAPET TYPE C
				LIN. FT.			
	545+50.43	566+07.04	C.L. CONST. HWY. 67 - MEDIAN		2056.61		
	568+91.16	588+66.31	C.L. CONST. HWY. 67 - MEDIAN		1975.15		
	591+08.97	606+00.00	C.L. CONST. HWY. 67 - MEDIAN		1491.03		
*	38+00.00	46+28.36	LT. - REDMOND RD.			828.36	
	569+16.88	587+80.07	C.L. CONST. HWY. 67 - LT. - L.M.L & LT. - RAMP 4 - MAIN. ST.	1863.19			
	576+50.00	584+92.13	C.L. CONST. HWY. 67 - RT. - R.M.L.				842.13
	584+92.13	588+79.34	C.L. CONST. HWY. 67 - RT. - R.M.L.	387.21			
	576+08.92	579+51.02	LT. - SCHOOL DRIVE	142.10			
	584+98.73	588+41.35	RT. - RAMP 4 - MAIN. ST.	342.62			
	585+04.25	588+32.39	C.L. CONST. HWY. 67 - LT. - L.M.L.	328.14			
	590+85.70	594+00.00	C.L. CONST. HWY. 67 - LT. - L.M.L.	314.30			
	594+00.00	599+25.00	C.L. CONST. HWY. 67 - LT. - L.M.L.				525.00
	591+48.96	596+50.00	C.L. CONST. HWY. 67 - RT. - R.M.L.	501.04			
	576+50.00	584+92.13	LT. - RAMP 1 - MAIN. ST. & LT. - SCHOOL DRIVE	842.13			
	TOTALS:			4720.73	5522.79	828.36	1367.13

* NOTE: UNLESS OTHERWISE NOTED ALL STATIONING AND LENGTHS SHOWN ABOVE ARE BASED ON C.L. CONST. HWY. 67. CALCULATED BASED ON REDMOND RD. STATIONING.

CRASH CUSHION

STATION	LOCATION	EACH
545+50.43	C.L. CONST. HWY. 67 - MEDIAN	1
576+50.00	C.L. CONST. HWY. 67 - RT. -R.M.L.	1
599+25.00	C.L. CONST. HWY. 67 - LT. -L.M.L.	1
TOTAL:		3

NOTE: THE CRASH CUSHION SHALL BE NON-GATING, REDIRECTIVE, AND COMPATIBLE WITH THE SITE GEOMETRY SHOWN ON THE PLANS.

JOINT SUPPORTS

LOCATION	WIDTH OF SUPPORT LIN. FT.	NUMBER OF SUPPORTS	CLASS "S" CONCRETE CU. YD.
RAMP 1 - REDMOND RD. (EXIT RAMP)	15	3	5.00
RAMP 4 - REDMOND RD. (ENTRANCE RAMP)	15	3	5.00
RT. C.L. CONST. HWY. 67 - SOUTH OF REDMOND RD. BRIDGE	48	2	10.67
RT. C.L. CONST. HWY. 67 - NORTH OF REDMOND RD. BRIDGE	48	2	10.67
RAMP 1 - MAIN ST. (EXIT RAMP)	15	3	5.00
RAMP 4 - MAIN ST. (ENTRANCE RAMP)	15	3	5.00
RT. C.L. CONST. HWY. 67 - SOUTH OF MAIN ST. BRIDGE	36	2	8.00
RT. C.L. CONST. HWY. 67 - NORTH OF MAIN ST. BRIDGE	36	2	8.00
LT. C.L. CONST. HWY. 67 - SOUTH OF REDMOND RD. BRIDGE	36	2	8.00
LT. C.L. CONST. HWY. 67 - NORTH OF REDMOND RD. BRIDGE	36	2	8.00
LT. C.L. CONST. HWY. 67 - SOUTH OF MAIN ST. BRIDGE	48	2	10.67
LT. C.L. CONST. HWY. 67 - NORTH OF MAIN ST. BRIDGE	48	2	10.67
TOTAL:			94.68

NOTE: SEE STD. DRWG. CPTJ-6A FOR LOCATION OF JOINT SUPPORTS AT BRIDGES.
SEE STD. DRWG. TR-1A FOR LOCATION OF JOINT SUPPORTS AT ENTRANCE & EXIT RAMPS.

HAND RAILING

STATION	STATION	LOCATION	HAND RAILING LIN.FT.
587+39.00	587+60.00	SCHOOL DRIVE	21
TOTAL:			21

CONCRETE ISLAND

STATION	LOCATION	AREA (SQ. YD.)
35+00	RT. - REDMOND RD.	94
42+00	RT. - REDMOND RD.	249
197+45	RT. - MAIN ST.	32
201+50	RT. - MAIN ST.	31
201+80	LT. - MAIN ST.	64
202+25	LT. - MAIN ST.	25
202+50	LT. - MAIN ST.	71
580+53	LT. - SCHOOL DR.	111
TOTAL:		677

STATE OF ARKANSAS JAMES L. BARR REGISTERED PROFESSIONAL ENGINEER No. 9808 5/23/14

QUANTITY SHEETS

r061276.qty.dgn 5/23/2014 8:43:04 AM

DATE REVISED	DATE FILMED	DATE REVISED	DATE FILMED	FED.RD. DIST.NO.	STATE	FED.AID PROJ.NO.	SHEET NO.	TOTAL SHEETS
5/23/14				6	ARK.			
				JOB NO.		061276	132	438

(2) QUANTITY SHEETS

BASE AND SURFACING - SUMMARY

LOCATION	ACHM BASE COURSE (1 1/2") (PG 64-22)	ACHM BINDER COURSE (1") (PG 64-22)	ACHM SURFACE COURSE (1/2") (PG 64-22)	ACHM SURFACE COURSE (3/8") (PG 64-22)	ACHM SURFACE COURSE (1/2") (PG 70-22)	CEMENT STAB. CRUSHED STONE BASE CRS. (6" COMP'D. DEPTH)			P.C.C. BASE			P.C.C. PAVEMENT (12" U.T.)	PORTLAND CEMENT CONCRETE CORRUGATIONS	TACK COAT	AGGREGATE BASE COURSE (CLASS 7)
						PROCESSING	AGGREGATE	CEMENT	4" U.T.	6" U.T.	10" U.T.				
	TON					SQ. YD.	TON		SQ. YD.					GALLON	TON
HWY. 67				4746.5		86293.7	28390.7	1812.5				82781.8		2589	7471.2
RAMPS				1097.6		19737.2	6493.4	414.4				17547.5	328.8	592.1	5311.6
SIDE ROADS & TEMP. PAVEMENT	14958.4	4237.5			4447.8				465.1	562.5	1335.3			3728.9	288.7
GUARDRAIL WIDENING			58.6												460.8
DRIVEWAYS & TURNOUTS			275.0												2499.3
TOTALS:	**14958.4**	**4237.5**	**333.6**	**5844.1**	**4447.8**	**106030.9**	**34884.1**	**2226.9**	**465.1**	**562.5**	**1335.3**	**100329.3**	**328.8**	**6910.0**	**16031.6**

BASIS OF ESTIMATE:
ACHM BASE COURSE (1-1/2") - MINERAL AGGREGATE = 96.2%, ASPHALT BINDER (PG 64-22) = 3.8%
ACHM BINDER COURSE (1") - MINERAL AGGREGATE = 95.6%, ASPHALT BINDER (PG 64-22) = 4.4%
ACHM SURFACE COURSE (1/2") - MINERAL AGGREGATE = 95.0%, ASPHALT BINDER (PG 64-22) = 5.0%
ACHM SURFACE COURSE (3/8") - MINERAL AGGREGATE = 95.0%, ASPHALT BINDER (PG 64-22) = 5.0%
ACHM SURFACE COURSE (1/2") - MINERAL AGGREGATE = 95.0%, ASPHALT BINDER (PG 70-22) = 5.0%
CEMENT STABILIZED CRUSHED STONE BASE - AGGREGATE = 94.0%, CEMENT = 6.0%

Nmax = 115 (PG 64-22)
Nmax = 160 (PG 70-22)

BASE AND SURFACING - HWY. 67

STATION	STATION	LOCATION	LENGTH	CEMENT STABILIZED CRUSHED STONE BASE COURSE (6" COMP'D. DEPTH)				PORTLAND CEMENT CONCRETE PAVEMENT (12" U.T.)		ACHM SURFACE COURSE (3/8") NORMAL				TACK COAT 0.03 GAL. PER SQ. YD.				AGGREGATE BASE COURSE CLASS 7	
				AVG. WID.	PROCESSING	CEMENT	AGGREGATE	AVG. WID.		AVG. WID.				TOTAL WID.		GALLONS /		TON /	
			FEET	FEET	SQ. YD.	TON	TON	FEET	SQ.YD.	FEET	SQ.YD.	POUND / SQ.YD.	TON	FEET	SQ.YD.	SQ.YD.	GALLON	STATION	TON
CL CONST. HWY. 67																			
534+00.00	538+51.56	LT. OF CL CONST. - TANGENT	451.56	60.0	3010.4	63.2	990.4	56.0	2809.7	60.0	3010.4	110.0	165.6	60.0	3010.4	0.03	90.3	93.25	421.1
538+51.56	541+51.56	LT. OF CL CONST. - TANGENT - TAPER	300.00	64.0	2133.3	44.8	701.9	60.0	2000.0	64.0	2133.3	110.0	117.3	64.0	2133.3	0.03	64.0	94.38	283.1
541+51.56	542+35.43	LT. OF CL CONST. - TANGENT - AUX. LANE	83.87	68.0	633.7	13.3	208.5	64.0	596.4	68.0	633.7	110.0	34.9	68.0	633.7	0.03	19.0	95.50	80.1
542+35.43	545+50.43	LT. OF CL CONST. - SUPER TRANS.- AUX. LANE	315.00	68.0	2380.0	50.0	783.0	64.0	2240.0	68.0	2380.0	110.0	130.9	68.0	2380.0	0.03	71.4	116.25	366.2
545+50.43	545+68.04	LT. OF CL CONST. - SUPER TRANS.- AUX. LANE - MEDIAN TRANS.	17.61	76.0	148.7	3.1	48.9	74.0	144.8	76.0	148.7	110.0	8.2	76.0	148.7	0.03	4.5	65.25	11.5
545+68.04	546+55.43	LT. OF CL CONST. - SUPER TRANS.- AUX. LANE - MEDIAN TRANS. - RAMP TAPER	87.39	75.9	737.0	15.5	242.5	73.9	717.6	75.9	737.0	110.0	40.5	75.9	737.0	0.03	22.1	67.75	59.2
546+55.43	548+51.56	LT. OF CL CONST. - MAX. SUPER - AUX. LANE - MEDIAN TRANS. - RAMP TAPER	196.13	76.9	1675.8	35.2	551.3	74.9	1632.2	76.9	1675.8	110.0	92.2	76.9	1675.8	0.03	50.3	69.50	136.3
548+51.56	550+90.43	LT. OF CL CONST. - MAX. SUPER - MEDIAN TRANS.	238.87	61.0	1619.0	34.0	532.7	59.0	1565.9	61.0	1619.0	110.0	89.0	61.0	1619.0	0.03	48.6	69.50	166.0
550+90.43	565+00.00	LT. OF CL CONST. - MAX. SUPER	1409.57	59.0	9240.5	194.1	3040.1	57.0	8927.3	59.0	9240.5	110.0	508.2	59.0	9240.5	0.03	277.2	69.50	979.7
565+00.00	565+50.00	LT. OF CL CONST. - MAX. SUPER - MEDIAN TRANS.	50.00	59.4	330.0	6.9	108.6	57.4	318.9	59.4	330.0	110.0	18.2	59.4	330.0	0.03	9.9	69.50	34.8
565+50.00	565+90.40	LT. OF CL CONST. - MAX. SUPER	40.40	59.8	268.4	5.6	88.3	57.8	259.5	59.8	268.4	110.0	14.8	59.8	268.4	0.03	8.1	69.50	28.1
569+26.05	569+50.00	LT. OF CL CONST. - SUPER TRANS. - CONC. SIDE BARRIER	23.95	59.8	159.1	3.3	52.3	57.8	153.8	59.8	159.1	110.0	8.8	59.8	159.1	0.03	4.8	31.50	7.5
569+50.00	570+00.00	LT. OF CL CONST. - SUPER TRANS. - MEDIAN TRANS. - CONC. SIDE BARRIER	50.00	59.4	330.0	6.9	108.6	58.7	326.1	59.4	330.0	110.0	18.2	59.4	330.0	0.03	9.9	25.00	12.5
570+00.00	572+40.02	LT. OF CL CONST. - SUPER TRANS. - CONC. SIDE BARRIER	240.02	59.0	1573.5	33.0	517.7	58.3	1554.8	59.0	1573.5	110.0	86.5	59.0	1573.5	0.03	47.2	25.00	60.0
572+40.02	573+22.04	LT. OF CL CONST. - TANGENT - CONC. SIDE BARRIER	82.02	59.0	537.7	11.3	176.9	58.3	531.3	59.0	537.7	110.0	29.6	59.0	537.7	0.03	16.1	25.00	20.5
573+22.04	576+22.04	LT. OF CL CONST. - TANGENT - TAPER - CONC. SIDE BARRIER	300.00	63.0	2100.0	44.1	690.9	62.3	2076.7	63.0	2100.0	110.0	115.5	63.0	2100.0	0.03	63.0	25.00	75.0
576+22.04	578+29.65	LT. OF CL CONST. - TANGENT - AUX LANE - CONC. SIDE BARRIER	207.61	67.0	1545.5	32.5	508.5	66.3	1529.4	67.0	1545.5	110.0	85.0	67.0	1545.5	0.03	46.4	25.00	51.9
578+29.65	580+54.65	LT. OF CL CONST. - AUX. SUPER TRANS. - AUX LANE - CONC. SIDE BARRIER	225.00	67.0	1675.0	35.2	551.1	66.3	1657.5	67.0	1675.0	110.0	92.1	67.0	1675.0	0.03	50.3	24.75	55.7
580+54.65	582+96.01	LT. OF CL CONST. - AUX. SUPER TRANS. - AUX LANE - RAMP TAPER - CONC. SIDE BARRIER	241.36	74.7	2003.3	42.1	659.1	74.0	1984.5	74.7	2003.3	110.0	110.2	74.7	2003.3	0.03	60.1	21.25	51.3
582+96.01	583+22.04	LT. OF CL CONST. - SUPER TRANS. - AUX LANE - RAMP TAPER - CONC. SIDE BARRIER	26.03	84.2	243.5	5.1	80.1	83.5	241.5	84.2	243.5	110.0	13.4	84.2	243.5	0.03	7.3	20.00	5.2
583+22.04	585+04.25	LT. OF CL CONST. - SUPER TRANS. - AUX LANE	182.21	67.0	1356.5	28.5	446.3	65.0	1316.0	67.0	1356.5	110.0	74.6	67.0	1356.5	0.03	40.7	68.25	124.4
585+04.25	587+16.01	LT. OF CL CONST. - SUPER TRANS. - AUX LANE - CONC. SIDE BARRIER	211.76	67.0	1576.4	33.1	518.6	66.3	1560.0	67.0	1576.4	110.0	86.7	67.0	1576.4	0.03	47.3	46.75	99.0
587+16.01	587+50.00	LT. OF CL CONST. - MAX. SUPER - AUX LANE - CONC. SIDE BARRIER	33.99	67.0	253.0	5.3	83.2	66.3	250.4	67.0	253.0	110.0	13.9	67.0	253.0	0.03	7.6	53.75	18.3
587+50.00	588+00.00	LT. OF CL CONST. - MAX. SUPER - AUX LANE - MEDIAN TRANS. - CONC. SIDE BARRIER	50.00	67.4	374.4	7.9	123.2	66.7	370.6	67.4	374.4	110.0	20.6	67.4	374.4	0.03	11.2	53.75	26.9
588+00.00	588+13.31	LT. OF CL CONST. - MAX. SUPER - AUX LANE - CONC. SIDE BARRIER	13.31	67.8	100.3	2.1	33.0	65.8	97.3	67.8	100.3	110.0	5.5	67.8	100.3	0.03	3.0	53.00	7.1
588+13.32	588+25.83	LT. OF CL CONST. - MAX. SUPER - AUX LANE	12.51	67.6	94.0	2.0	30.9	65.8	91.5	67.6	94.0	110.0	5.2	67.6	94.0	0.03	2.8	107.50	13.4
591+23.02	591+75.00	LT. OF CL CONST. - MAX SUPER. - AUX LANE - CONC. SIDE BARRIER	51.98	67.8	391.6	8.2	128.8	65.8	380.0	67.8	391.6	110.0	21.5	67.8	391.6	0.03	11.7	53.00	27.5
591+75.00	592+25.00	LT. OF CL CONST. - MAX. SUPER - AUX LANE - MEDIAN TRANS. - CONC. SIDE BARRIER	50.00	67.4	374.4	7.9	123.2	66.7	370.6	67.4	374.4	110.0	20.6	67.4	374.4	0.03	11.2	53.75	26.9
592+25.00	594+00.00	LT. OF CL CONST. - MAX. SUPER - AUX LANE - CONC. SIDE BARRIER	175.00	67.0	1302.8	27.4	428.6	66.3	1289.2	67.0	1302.8	110.0	71.7	67.0	1302.8	0.03	39.1	53.75	94.1
594+00.00	595+00.00	LT. OF CL CONST. - MAX. SUPER - AUX LANE - CONC. SIDE BARRIER/MSE WALL	100.00	64.0	711.1	14.9	234.0	59.0	655.6	64.0	711.1	110.0	39.1	64.0	711.1	0.03	21.3		
595+00.00	596+88.85	LT. OF CL CONST. - MAX. SUPER - TAPER - CONC. SIDE BARRIER/MSE WALL	188.85	59.4	1246.4	26.2	410.1	52.4	1099.5	59.4	1246.4	110.0	68.6	59.4	1246.4	0.03	37.4		
596+88.85	597+15.53	LT. OF CL CONST. - MAX. SUPER - CONC. SIDE BARRIER/MSE WALL	26.68	54.7	162.2	3.4	53.4	47.7	141.4	54.7	162.2	110.0	8.9	54.7	162.2	0.03	4.9		
597+15.53	598+00.00	LT. OF CL CONST. - SUPER TRANS. - CONC. SIDE BARRIER/MSE WALL	84.47	54.7	513.4	10.8	168.9	47.7	447.7	54.7	513.4	110.0	28.2	54.7	513.4	0.03	15.4		
598+00.00	599+25.00	LT. OF CL CONST. - SUPER TRANS. - MEDIAN TRANS. - CONC. SIDE BARRIER/MSE WALL	125.00	53.7	745.8	15.7	245.4	46.7	648.6	53.7	745.8	110.0	41.0	53.7	745.8	0.03	22.4		
599+25.00	600+00.00	LT. OF CL CONST. - SUPER TRANS. - MEDIAN TRANS.	75.00	44.6	371.7	7.8	122.3	42.6	355.0	44.6	371.7	110.0	20.4	44.6	371.7	0.03	11.2	85.75	64.3
600+00.00	601+35.53	LT. OF CL CONST. - SUPER TRANS. - PAVEMENT TRANS.	135.53	24.0	361.4	7.6	118.9	24.0	361.4	24.0	361.4	110.0	19.9	24.0	361.4	0.03	10.8		
534+00.00	542+35.43	RT. OF CL CONST. - TANGENT - AUX. LANE	835.43	68.0	6312.1	132.6	2076.7	64.0	5940.8	68.0	6312.1	110.0	347.2	68.0	6312.1	0.03	189.4	95.50	797.8
542+35.43	545+50.43	RT. OF CL CONST. - SUPER TRANS.- AUX. LANE	315.00	68.0	2380.0	50.0	783.0	64.0	2240.0	68.0	2380.0	110.0	130.9	68.0	2380.0	0.03	71.4	118.00	371.7
545+50.43	546+55.43	RT. OF CL CONST. - SUPER TRANS.- AUX. LANE - MEDIAN TRANS.	105.00	75.1	876.2	18.4	288.3	73.1	852.8	75.1	876.2	110.0	48.2	75.1	876.2	0.03	26.3	116.25	122.1
546+55.43	550+90.43	RT. OF CL CONST. - MAX. SUPER - AUX. LANE - MEDIAN TRANS.	435.00	70.6	3412.3	71.7	1122.6	68.6	3315.7	70.6	3412.3	110.0	187.7	70.6	3412.3	0.03	102.4	92.00	400.2
550+90.43	553+10.36	RT. OF CL CONST. - MAX. SUPER - AUX. LANE	219.93	67.0	1637.3	34.4	538.7	65.0	1588.4	67.0	1637.3	110.0	90.1	67.0	1637.3	0.03	49.1	92.00	202.3
553+10.36	554+60.83	RT. OF CL CONST. - MAX. SUPER - AUX. LANE - RAMP TAPER	150.47	68.5	1145.2	24.0	376.8	66.5	1111.8	68.5	1145.2	110.0	63.0	68.5	1145.2	0.03	34.4	92.00	138.4
554+60.83	558+16.22	RT. OF CL CONST. - MAX. SUPER - AUX. LANE SUPER TRANS. - RAMP TAPER	355.39	85.7	3384.1	71.1	1113.4	83.7	3305.1	85.7	3384.1	110.0	186.1	85.7	3384.1	0.03	101.5	71.00	252.3
558+16.22	559+88.84	RT. OF CL CONST. - MAX. SUPER - RAMP TAPER	172.62	68.3	1310.0	27.5	431.0	66.3	1271.6	68.3	1310.0	110.0	72.1	68.3	1310.0	0.03	39.3	120.00	207.1
559+88.84	560+89.62	RT. OF CL CONST. - MAX. SUPER	100.78	59.0	660.7	13.9	217.4	57.0	638.3	59.0	660.7	110.0	36.3	59.0	660.7	0.03	19.8	120.00	120.9
560+89.62	563+89.62	RT. OF CL CONST. - MAX. SUPER - TAPER	300.00	63.0	2100.0	44.1	690.9	61.0	2033.3	63.0	2100.0	110.0	115.5	63.0	2100.0	0.03	63.0	106.00	318.0
563+89.62	565+00.00	RT. OF CL CONST. - MAX. SUPER - AUX. LANE	110.38	67.0	821.7	17.3	270.3	65.0	797.2	67.0	821.7	110.0	45.2	67.0	821.7	0.03	24.7	92.00	101.5
565+00.00	565+50.00	RT. OF CL CONST. - MAX. SUPER - AUX. LANE - MEDIAN TRANS.	50.00	67.4	374.4	7.9	123.2	65.4	363.3	67.4	374.4	110.0	20.6	67.4	374.4	0.03	11.2	92.00	46.0
565+50.00	565+75.12	RT. OF CL CONST. - MAX. SUPER - AUX LANE	25.12	67.8	189.2	4.0	62.2	65.8	183.7	67.8	189.2	110.0	10.4	67.8	189.2	0.03	5.7	92.00	23.1
569+08.05	569+50.00	RT. OF CL CONST. - SUPER TRANS. - AUX LANE	41.95	67.7	315.6	6.6	103.8	65.7	306.2	67.7	315.6	110.0	17.4	67.7	315.6	0.03	9.5	82.50	34.6
569+50.00	570+00.00	RT. OF CL CONST. - SUPER TRANS.- AUX. LANE - MEDIAN TRANS.	50.00	67.4	374.4	7.9	123.2	65.4	363.3	67.4	374.4	110.0	20.6	67.4	374.4	0.03	11.2	78.75	39.4
570+00.00	571+29.02	RT. OF CL CONST. - SUPER TRANS.- AUX. LANE	129.02	67.0	960.5	20.2	316.0	65.0	931.8	67.0	960.5	110.0	52.8	67.0	960.5	0.03	28.8	71.50	92.2
571+29.02	572+40.02	RT. OF CL CONST. - SUPER TRANS.- AUX. LANE - RAMP TAPER	111.00	68.6	846.1	17.8	278.4	66.6	821.4	68.6	846.1	110.0	46.5	68.6	846.1	0.03	25.4	58.25	64.7
572+40.02	575+09.49	RT. OF CL CONST. - TANGENT- AUX. LANE - RAMP TAPER	269.47	78.8	2359.4	49.5	776.2	76.8	2299.5	78.8	2359.4	110.0	129.8	78.8	2359.4	0.03	70.8	50.00	134.7
575+09.49	576+35.25	RT. OF CL CONST. - TANGENT - RAMP TAPER	125.76	59.5	831.4	17.5	273.5	57.5	803.5	59.5	831.4	110.0	45.7	59.5	831.4	0.03	24.9	47.75	60.1
576+35.25	576+50.00	RT. OF CL CONST. - TANGENT	14.75	59.0	96.7	2.0	31.8	57.0	93.4	59.0	96.7	110.0	5.3	59.0	96.7	0.03	2.9	47.75	7.0
576+50.00	584+92.13	RT. OF CL CONST. - TANGENT/SUPER TRANS. - CONC. SIDE BARRIER/MSE WALL	842.13	56.0	5239.9	110.0	1723.9	49.0	4584.9	56.0	5239.9	110.0	288.2	56.0	5239.9	0.03	157.2		
584+92.13	587+50.00	RT. OF CL CONST. - SUPER TRANS. - CONC. SIDE BARRIER/MSE WALL TRANS.	257.87	59.0	1690.5	35.5	556.2	58.3	1670.4	59.0	1690.5	110.0	93.0	59.0	1690.5	0.03	50.7	17.00	43.8
587+50.00	588+00.00	RT. OF CL CONST. - MAX. SUPER - CONC. SIDE BARRIER/MSE WALL - MEDIAN TRANS.	50.00	59.4	330.0	6.9	108.6	58.7	326.1	59.4	330.0	110.0	18.2	59.4	330.0	0.03	9.9	34.00	17.0
588+00.00	588+13.31	RT. OF CL CONST. - MAX. SUPER - CONC. SIDE BARRIER	13.31	59.9	88.6	1.9	29.1	57.9	85.6	59.9	88.6	110.0	4.9	59.9	88.6	0.03	2.7	37.75	5.0
588+13.32	588+25.83	RT. OF CL CONST. - MAX. SUPER	12.51	60.0	83.4	1.8	27.4	58.0	80.6	60.0	83.4	110.0	4.6	60.0	83.4	0.03	2.5	89.50	11.2
591+33.62	591+75.00	RT. OF CL CONST. - MAX. SUPER - CONC. SIDE BARRIER	41.38	59.8	274.9	5.8	90.4	57.8	265.8	59.8	274.9	110.0	15.1	59.8	274.9	0.03	8.2	37.75	15.6
591+75.00	592+25.00	RT. OF CL CONST. - MAX. SUPER - CONC. SIDE BARRIER - MEDIAN TRANS.	50.00	59.4	330.0	6.9	108.6	58.7	326.1	59.4	330.0	110.0	18.2	59.4	330.0	0.03	9.9	34.00	17.0
592+25.00	596+50.00	RT. OF CL CONST. - MAX. SUPER - CONC. SIDE BARRIER/MSE WALL	425.00	59.0	2786.1	58.5	916.6	58.3	2753.1	59.0	2786.1	110.0	153.2	59.0	2786.1	0.03	83.6	34.00	144.5
596+50.00	597+15.53	RT. OF CL CONST. - MAX. SUPER	65.53	59.0	429.6	9.0	141.3	57.0	415.0	59.0	429.6	110.0	23.6	59.0	429.6	0.03	12.9	89.50	58.6
597+15.53	598+00.00	RT. OF CL CONST. - SUPER TRANS.	84.47	59.0	553.7	11.6	182.2	57.0	535.0	59.0	553.7	110.0	30.5	59.0	553.7	0.03	16.6	85.00	71.8
598+00.00	600+00.00	RT. OF CL CONST. - SUPER TRANS. - MEDIAN TRANS.	200.00	57.5	1277.8	26.8	420.4	55.5	1233.3	57.5	1277.8	110.0	70.3	57.5	1277.8	0.03	38.3	72.50	145.0
600+00.00	601+35.53	RT. OF CL CONST. - SUPER TRANS. - PAVEMENT TRANS.	135.53	36.0	542.1	11.4	178.4	36.0	542.1	36.0	542.1	110.0	29.8	36.0	542.1	0.03	16.3		
TOTALS:					**86293.7**	**1812.5**	**28390.7**		**82781.8**		**86293.7**		**4746.5**		**86293.7**		**2589.0**		**7471.2**

BASIS OF ESTIMATE:
ACHM SURFACE COURSE (3/8") - MINERAL AGGREGATE = 95.0%, ASPHALT BINDER (PG 64-22) = 5.0%
CEMENT STABILIZED CRUSH STONE BASE - AGGREGATE = 94.0%, CEMENT = 6.0%

Nmax = 115 (PG 64-22)

STATE OF ARKANSAS
REGISTERED PROFESSIONAL ENGINEER
No. 9808
JAMES L. BARR
5/23/14

QUANTITY SHEETS

DATE REVISED	DATE FILMED	DATE REVISED	DATE FILMED
5/23/14			

FED.RD. DIST.NO.	STATE	FED.AID PROJ.NO.	SHEET NO.	TOTAL SHEETS
6	ARK.			
JOB NO.		061276	133	438

(2) QUANTITY SHEETS

STATE OF ARKANSAS REGISTERED PROFESSIONAL ENGINEER No. 9808 JAMES L. BARR 5/23/14

BASE AND SURFACING - RAMPS

STATION	STATION	LOCATION	LENGTH	CEMENT STABILIZED CRUSHED STONE BASE COURSE (6" COMP'D. DEPTH)				PORTLAND CEMENT CONCRETE PAVEMENT (12" U.T.)		PORTLAND CEMENT CONCRETE CORRUGATIONS	ACHM SURFACE COURSE (3/8") NORMAL				TACK COAT 0.03 GAL. PER SQ. YD.				AGGREGATE BASE COURSE CLASS 7	
				AVG. WID.	PROCESSING	CEMENT	AGGREGATE	AVG. WID.			AVG. WID.		POUND /		TOTAL WID.		GALLONS /		TON /	
			FEET	FEET	SQ. YD.	TON	TON	FEET	SQ.YD.	SQ. YD.	FEET	SQ.YD.	SQ.YD.	TON	FEET	SQ.YD.	SQ.YD.	GALLON	STATION	TON
REDMOND RD. RAMP 1																				
558+25.00	558+58.43	TANGENT - GORE AREA	33.37	29.0	107.5	2.3	35.4	25.0	92.7		29.0	107.5	110.0	5.9	29.0	107.5	0.03	3.2	50.00	16.7
558+58.43	561+08.43	SUPER TRANS.	250.00	29.0	805.6	16.9	265.0	25.0	694.4		29.0	805.6	110.0	44.3	29.0	805.6	0.03	24.2	169.00	422.5
561+08.43	561+82.86	MAX. SUPER	74.43	29.0	239.8	5.0	78.9	25.0	206.8		29.0	239.8	110.0	13.2	29.0	239.8	0.03	7.2	235.50	175.3
561+82.86	562+04.75	MAX. SUPER - TAPER	21.89	29.5	71.8	1.5	23.6	25.5	62.0		29.5	71.8	110.0	3.9	29.5	71.8	0.03	2.2	235.50	51.6
562+04.75	563+82.86	SUPER TRANS. - TAPER	178.11	34.0	672.9	14.1	221.4	30.0	593.7		34.0	672.9	110.0	37.0	34.0	672.9	0.03	20.2	178.50	317.9
563+82.86	564+54.75	SUPER TRANS. - TWO LANE	71.89	38.0	303.5	6.4	99.9	34.0	271.6		38.0	303.5	110.0	16.7	38.0	303.5	0.03	9.1	112.00	80.5
564+54.75	565+36.59	TANGENT - TWO LANE	81.84	38.0	345.5	7.3	113.7	34.0	309.2		38.0	345.5	110.0	19.0	38.0	345.5	0.03	10.4	102.50	83.9
565+36.59	566+80.60	TANGENT - TWO LANE - RAMP RADIUS	144.01	VAR.	1074.0	22.6	353.3	VAR.	1032.0	159.7	VAR.	1074.0	110.0	59.1	VAR.	1074.0	0.03	32.2	102.50	147.6
REDMOND RD. RAMP 4																				
548+48.32	550+48.32	SUPER TRANS. - GORE AREA	200.00	29.0	644.4	13.5	212.0	25.0	555.6		29.0	644.4	110.0	35.4	29.0	644.4	0.03	19.3		
550+48.32	551+64.30	MAX. SUPER - GORE AREA	115.98	29.0	373.7	7.8	122.9	25.0	322.2		29.0	373.7	110.0	20.6	29.0	373.7	0.03	11.2		
551+64.30	555+75.65	MAX. SUPER	411.35	29.0	1325.5	27.8	436.1	25.0	1142.6		29.0	1325.5	110.0	72.9	29.0	1325.5	0.03	39.8	147.50	606.7
555+75.65	558+75.65	SUPER TRANS.	300.00	29.0	966.7	20.3	318.0	25.0	833.3		29.0	966.7	110.0	53.2	29.0	966.7	0.03	29.0	165.50	496.5
558+75.65	560+54.86	MAX. SUPER	179.21	29.0	577.5	12.1	190.0	25.0	497.8		29.0	577.5	110.0	31.8	29.0	577.5	0.03	17.3	183.50	328.9
560+54.86	563+04.86	SUPER TRANS	250.00	29.0	805.6	16.9	265.0	25.0	694.4		29.0	805.6	110.0	44.3	29.0	805.6	0.03	24.2	143.00	357.5
563+04.86	563+96.23	TANGENT	91.37	29.0	294.4	6.2	96.9	25.0	253.8		29.0	294.4	110.0	16.2	29.0	294.4	0.03	8.8	102.50	93.7
563+96.23	565+76.23	SUPER TRANS.	180.00	29.0	580.0	12.2	190.8	25.0	500.0		29.0	580.0	110.0	31.9	29.0	580.0	0.03	17.4	159.25	286.7
565+76.23	565+93.48	MAX. SUPER	17.25	29.0	55.6	1.2	18.3	25.0	47.9		29.0	55.6	110.0	3.1	29.0	55.6	0.03	1.7	215.75	37.2
565+93.48	566+62.18	SUPER TRANS.	68.70	29.0	221.4	4.6	72.8	25.0	190.8		29.0	221.4	110.0	12.2	29.0	221.4	0.03	6.6	187.50	128.8
566+62.18	567+73.48	SUPER TRANS. - RAMP RADIUS	111.30	VAR.	695.8	14.6	228.9	VAR.	670.2	169.1	VAR.	695.8	110.0	38.3	VAR.	695.8	0.03	20.9	131.00	145.8
MAIN ST., RAMP 1																				
575+09.62	575+29.57	TANGENT - GORE AREA	19.95	29.0	64.3	1.4	21.2	25.0	55.4		29.0	64.3	110.0	3.5	29.0	64.3	0.03	1.9	50.00	10.0
575+29.57	576+50.00	SUPER TRANS.	120.43	29.0	388.1	8.2	127.7	25.0	334.5		29.0	388.1	110.0	21.3	29.0	388.1	0.03	11.6	113.25	136.4
576+50.00	577+79.57	SUPER TRANS. - CONC. SIDE BARRIER	129.57	29.0	417.5	8.8	137.4	25.0	359.9		29.0	417.5	110.0	23.0	29.0	417.5	0.03	12.5	141.50	183.3
577+79.57	578+28.59	MAX. SUPER - CONC. SIDE BARRIER	49.02	29.0	158.0	3.3	52.0	25.0	136.2		29.0	158.0	110.0	8.7	29.0	158.0	0.03	4.7	159.00	77.9
578+28.59	580+78.59	SUPER TRANS. - CONC. SIDE BARRIER	250.00	29.0	805.6	16.9	265.0	25.0	694.4		29.0	805.6	110.0	44.3	29.0	805.6	0.03	24.2	144.75	361.9
580+78.59	581+51.76	TANGENT - CONC. SIDE BARRIER	73.17	29.0	235.8	5.0	77.6	25.0	203.3		29.0	235.8	110.0	13.0	29.0	235.8	0.03	7.1	112.50	82.3
MAIN ST., RAMP 4																				
583+21.88	583+84.64	MAX. SUPER - GORE AREA - CONC. SIDE BARRIER	62.76	29.0	202.2	4.2	66.5	25.0	174.3		29.0	202.2	110.0	11.1	29.0	202.2	0.03	6.1	56.00	35.1
583+84.64	583+98.29	MAX. SUPER - CONC. SIDE BARRIER	13.65	29.0	44.0	0.9	14.5	25.0	37.9		29.0	44.0	110.0	2.4	29.0	44.0	0.03	1.3	42.00	5.7
583+98.29	585+00.00	SUPER TRANS. - CONC. SIDE BARRIER	101.71	29.0	327.7	6.9	107.8	25.0	282.5		29.0	327.7	110.0	18.0	29.0	327.7	0.03	9.8	81.50	82.9
585+00.00	586+98.29	SUPER TRANS. - CONC. SIDE BARRIER LT. & RT.	198.29	29.0	638.9	13.4	210.2	25.0	550.8		29.0	638.9	110.0	35.1	29.0	638.9	0.03	19.2	87.50	173.5
586+98.29	588+05.35	TANGENT - CONC. SIDE BARRIER LT. & RT.	107.06	29.0	345.0	7.2	113.5	25.0	297.4		29.0	345.0	110.0	19.0	29.0	345.0	0.03	10.4	34.75	37.2
588+05.35	588+42.30	TANGENT - C&G LT. - CONC. SIDE BARRIER RT.	36.95	30.3	124.4	2.6	40.9	26.3	108.0		30.3	124.4	110.0	6.8	30.3	124.4	0.03	3.7	64.75	23.9
588+42.30	588+69.50	CROSS SLOPE TRANS. - C&G LT. - CONC. SIDE BARRIER RT.	27.20	31.4	94.9	2.0	31.2	27.4	82.8		31.4	94.9	110.0	5.2	31.4	94.9	0.03	2.8	64.75	17.6
588+69.50	589+08.49	CROSS SLOPE TRANS. - C&G LT. & RT.	38.99	86.7	375.6	7.9	123.6	82.7	358.3		86.7	375.6	110.0	20.7	86.7	375.6	0.03	11.3		
SCHOOL DRIVE																				
577+64.17	579+52.96	SUPER TRANS. - C&G LT. & RT.	188.79	22.0	461.5	9.7	151.8	18.0	377.6		22.0	461.5	110.0	25.4	22.0	461.5	0.03	13.8		
579+52.96	580+83.61	SUPER TRANS. RAMP 1 / SCHOOL DR. - C&G RT.	130.65	21.5	312.1	6.6	102.7	21.5	312.1		21.5	312.1	111.0	17.3	21.5	312.1	0.03	9.4		
580+83.61	581+52.96	TANGENT RAMP 1 / SCHOOL DR. - C&G RT.	69.35	21.5	165.7	3.5	54.5	21.5	165.7		21.5	165.7	112.0	9.3	21.5	165.7	0.03	5.0		
581+52.96	581+90.11	TANGENT - C&G RT.	37.15	45.5	187.8	3.9	61.8	41.5	171.3		45.5	187.8	113.0	10.6	45.5	187.8	0.03	5.6	30.50	11.3
581+90.11	584+40.11	SUPER TRANS. - C&G RT.	250.00	45.5	1263.9	26.5	415.8	41.5	1152.8		45.5	1263.9	114.0	72.0	45.5	1263.9	0.03	37.9	38.25	95.6
584+40.11	586+55.72	MAX SUPER - C&G RT.	215.61	45.5	1090.0	22.9	358.6	41.5	994.2		45.5	1090.0	115.0	62.7	45.5	1090.0	0.03	32.7	45.75	98.6
586+55.72	589+05.72	SUPER TRANS. - C&G RT.	250.00	45.5	1263.9	26.5	415.8	41.5	1152.8		45.5	1263.9	116.0	73.3	45.5	1263.9	0.03	37.9	38.25	95.6
589+05.72	589+22.23	TANGENT - C&G RT.	16.51	45.5	83.5	1.8	27.5	41.5	76.1		45.5	83.5	117.0	4.9	45.5	83.5	0.03	2.5	30.50	5.0
589+22.23	590+39.00	RADIUS - TANGENT - C&G LT. & RT.	116.77	VAR.	525.6	11.0	172.9	38.4	498.2		VAR.	525.6	118.0	31.0	VAR.	525.6	0.03	15.8		
TOTALS:					19737.2	414.4	6493.4		17547.5	328.8		19737.2		1097.6		19737.2		592.1		5311.6

BASIS OF ESTIMATE:
ACHM SURFACE COURSE (3/8") - MINERAL AGGREGATE = 95.0%, ASPHALT BINDER (PG 64-22) = 5.0%
CEMENT STABILIZED CRUSH STONE BASE - AGGREGATE = 94.0%, CEMENT = 6.0%

Nmax = 115 (PG 64-22)

BASE AND SURFACING - SIDE ROADS & TEMP. PAVEMENT

STATION	STATION	LOCATION	LENGTH	ACHM BASE COURSE (1 1/2")				ACHM BINDER COURSE (1")				ACHM SURFACE COURSE (1/2") LEVELING - 110 LBS. PER SQ. YD.				ACHM SURFACE COURSE (1/2") NORMAL				TOTAL	TACK COAT 0.10 GAL. PER SQ. YD.			TACK COAT 0.03 GAL. PER SQ. YD.				PORTLAND CEMENT CONCRETE BASE (4" U.T.)		PORTLAND CEMENT CONCRETE BASE (6" U.T.)		PORTLAND CEMENT CONCRETE BASE (10" U.T.)		AGGREGATE BASE COURSE CLASS 7	
				AVG. WID.	SQ.YD.	POUND / SQ.YD.	PG 64-22	AVG. WID.	SQ.YD.	POUND / SQ.YD.	PG 64-22	AVG. WID.	SQ.YD.	POUND / SQ.YD.	TON	AVG. WID.	SQ.YD.	POUND / SQ.YD.	TON	PG 70-22	TOTAL WID.	SQ.YD.	GALLON	TOTAL WID.	SQ.YD.	GALLON	TOTAL GALLONS	AVG. WID.	SQ.YD.	AVG. WID.	SQ.YD.	AVG. WID.	SQ.YD.	TON / STATION	TON
			FEET	FEET			TON	FEET			TON	FEET				FEET				TON	FEET			FEET				FEET		FEET		FEET			
REDMOND RD.																																			
32+59.49	34+19.49	SUPER TRANS.- TAPER	160.00					28.8	512.0	330.0	84.5	22.0	391.1	110.0	21.5	28.0	497.8	110.0	27.4	48.9	22.0	391.1	39.1	28.0	497.8	14.9	54.0							92.38	147.8
		FINAL ACHM SURFACE COURSE LIFT	160.00													36.0	640.0	220.0	70.4	70.4															
34+19.49	34+44.82	SUPER TRANS.	25.33	12.8	36.0	550.0	9.9	34.9	98.2	330.0	16.2	22.0	61.9	110.0	3.4	34.0	95.7	220.0	10.5	13.9	22.0	61.9	6.2	80.8	227.4	6.8	13.0							188.00	47.6
		FINAL ACHM SURFACE COURSE LIFT	25.33													50.0	140.7	220.0	15.5	15.5															
34+44.82	35+30.00	SUPER TRANS.	85.18	12.8	121.1	550.0	33.3	34.9	330.3	330.0	54.5	22.0	208.2	110.0	11.5	34.0	321.8	220.0	35.4	46.9	22.0	208.2	20.8	80.8	764.7	22.9	43.7							109.50	93.3
		FINAL ACHM SURFACE COURSE LIFT	85.18													42.0	397.5	220.0	43.7	43.7															
35+30.00	43+28.36	C&G LT. & RT.	798.36	14.5	1286.2	550.0	353.7	34.0	3016.0	330.0	497.6	22.0	1951.5	110.0	107.3	34.0	3016.0	220.0	331.8	439.1	22.0	1951.5	195.2	80.0	7096.5	212.9	408.1					2.5	221.8			
		FINAL ACHM SURFACE COURSE LIFT	798.36													34.0	3016.0	220.0	331.8	331.8															
43+28.36	46+28.36	C&G LT. & RT. - TAPER	300.00					28.4	946.7	330.0	156.2	22.0	733.3	110.0	40.3	28.0	933.3	110.0	51.3	91.6	22.0	733.3	73.3	56.4	1880.0	56.4	129.7					2.5	83.3			
		FINAL ACHM SURFACE COURSE LIFT	300.00													28.0	933.3	220.0	102.7	102.7															
MAIN ST.																																			
194+00.00	196+26.00	NOTCH & WIDENING RT. - TANGENT OVERLAY	226.00									48.0	1205.3	110.0	66.3	50.0	1255.6	220.0	138.1	204.4	50.0	1255.6	125.6				125.6	2.5	62.8			3.0	75.3			
196+26.00	199+08.00	NOTCH & WIDENING LT. & RT. - TANGENT OVERLAY	282.00									50.0	1566.7	110.0	86.2	62.0	1942.7	220.0	213.7	299.9	50.0	1566.7	156.7				156.7	5.0	156.7			12.0	376.0			
199+08.00	203+50.00	NOTCH & WIDENING LT. & RT. - TANGENT OVERLAY	442.00									50.0	2455.6	110.0	135.1	68.0	3339.6	220.0	367.4	502.5	50.0	2455.6	245.6				245.6	5.0	245.6			18.0	884.0			
T.P. WHITE DR.																																			
100+01.27	109+27.82	C&G LT. ONLY	926.5																											2.5	257.4				
TEMP. WIDENING - STAGE 1A																																			
527+50.00	529+72.74	TEMP. WIDENING HWY. 67 MEDIAN	222.74	24.0	594.0	1320.0	392.0	21.3	527.2	330.0	87.0					20.0	495.0	220.0	54.5	54.5				89.3	2210.1	66.3	66.3								
529+72.74	532+00.00	TEMP. WIDENING HWY. 67 MEDIAN	227.26	40.0	1010.0	1320.0	666.6	40.0	1010.0	330.0	166.7					40.0	1010.0	220.0	111.1	111.1				160.0	4040.2	121.2	121.2								
532+00.00	547+27.86	TEMP. WIDENING HWY. 67 MEDIAN	1527.86	31.0	5262.6	1320.0	3473.3	31.0	5262.6	330.0	868.3					31.0	5262.6	220.0	578.9	578.9				124.0	21050.5	631.5	631.5								
547+27.86	548+47.71	TEMP. WIDENING HWY. 67 MEDIAN	119.85	25.0	332.9	1320.0	219.7	25.0	332.9	330.0	54.9					25.0	332.9	220.0	36.6	36.6				100.0	1331.7	40.0	40.0								
548+47.71	555+00.00	TEMP. WIDENING HWY. 67 MEDIAN	652.29	28.0	2029.3	1320.0	1339.3	28.0	2029.3	330.0	334.8					28.0	2029.3	220.0	223.2	223.2				112.0	8117.4	243.5	243.5								
555+00.00	564+50.00	TEMP. WIDENING HWY. 67 MEDIAN	950.00	17.4	1836.7	1320.0	1212.2	17.4	1836.7	330.0	303.1					17.4	1836.7	220.0	202.0	202.0				69.6	7346.7	220.4	220.4								
591+17.20	599+36.11	TEMP. WIDENING RT. OF HWY. 67	818.91	17.6	1601.4	1320.0	1056.9	14.9	1355.8	330.0	223.7					13.6	1237.5	220.0	136.1	136.1				63.7	5796.1	173.9	173.9								
591+63.81	596+40.40	TEMP. WIDENING HWY. 67 MEDIAN	476.59	11.8	624.9	1320.0	412.4	9.1	481.9	330.0	79.5					7.8	413.0	220.0	45.4	45.4				40.5	2144.7	64.3	64.3								
596+40.40	602+59.40	TEMP. WIDENING HWY. 67 MEDIAN	619.00	15.5	1066.1	1320.0	703.6	15.5	1066.1	330.0	175.9					15.5	1066.1	220.0	117.3	117.3				62.0	4264.2	127.9	127.9								
599+35.11	605+21.17	TEMP. WIDENING RT. OF HWY. 67	585.06	17.6	1144.1	1320.0	755.1	14.9	968.6	330.0	159.8					13.6	884.1	220.0	97.3	97.3				63.7	4140.9	124.2	124.2								
600+00.00	601+52.10	TEMP. WIDENING LT. OF HWY. 67	152.10	9.7	163.9	1320.0	108.2	9.7	163.9	330.0	27.0					9.7	163.9	220.0	18.0	18.0				38.8	655.7	19.7	19.7								
602+59.40	605+67.89	TEMP. WIDENING HWY. 67 MEDIAN	308.49	11.8	404.5	1320.0	267.0	9.1	311.9	330.0	51.5					7.8	267.4	220.0	29.4	29.4				40.5	1388.2	41.6	41.6								
TEMP. RAMP 1 CONN. - STAGE 2																																			
22+71.45	25+49.15	TANGENT- TEMP RAMP	277.70	31.0	956.5	1320.0	631.3	25.5	786.8	330.0	129.8					23.0	709.7	220.0	78.1	78.1				110.5	3409.5	102.3	102.3								
25+49.15	26+73.22	TANGENT- TEMP RAMP - TAPER	124.07	15.5	213.7	1320.0	141.0	12.8	176.5	330.0	29.1					11.5	158.5	220.0	17.4	17.4				55.3	762.3	22.9	22.9								
TEMP. WIDENING - STAGE 2																																			
535+00.00	545+50.00	TEMP. WIDENING IN HWY. 67 MEDIAN	1050.00	20.0	2333.3	1320.0	1540.0	20.0	2333.3	330.0	385.0					20.0	2333.3	220.0	256.7	256.7				80.0	9333.3	280.0	280.0								
595+50.00	600+00.00	TEMP. WIDENING IN HWY. 67 MEDIAN	350.00	12.7	493.9	1320.0	326.0	12.7	493.9	330.0	81.5					12.7	493.9	220.0	54.3	54.3				50.8	1975.6	59.3	59.3								
TEMP. RAMP 4 CONN.- STAGE 1A																																			
12+40.00	13+02.71	TANGENT- TEMP RAMP - TAPER	62.71	15.5	108.0	1320.0	71.3	12.8	89.2	330.0	14.7					11.5	80.1	220.0	8.8	8.8				55.3	385.3	11.6	11.6								
13+02.71	14+38.43	TANGENT- TEMP RAMP	135.72	31.0	467.5	1320.0	308.6	25.5	384.5	330.0	63.4					23.0	346.8	220.0	38.1	38.1				110.5	1666.3	50.0	50.0								
14+38.43	15+00.32	TANGENT - OVERLAY ON EXISTING RAMP	61.89													23.0	158.2	220.0	17.4	17.4	23.0	158.2	15.8												
15+00.32	18+51.30	TANGENT- TEMP RAMP	350.98	31.0	1208.9	1320.0	797.9	25.5	994.4	330.0	164.1					23.0	896.9	220.0	98.7	98.7				110.5	4309.3	129.3	129.3								
18+51.30	19+73.72	TANGENT- TEMP RAMP - TAPER	122.42	15.5	210.8	1320.0	139.1	12.8	174.1	330.0	28.7					11.5	156.4	220.0	17.2	17.2				55.3	752.2	22.6	22.6								
TOTALS:					23506.3		14958.4		25682.8		4237.5		8573.6				36862.3			4447.8		8782.1			95546.6		3728.9		465.1		562.5		1335.3		288.7

BASIS OF ESTIMATE:
ACHM BASE COURSE (1-1/2") - MINERAL AGGREGATE = 96.2%, ASPHALT BINDER (PG 64-22) = 3.8%
ACHM BINDER COURSE (1") - MINERAL AGGREGATE = 95.6%, ASPHALT BINDER (PG 64-22) = 4.4%
ACHM SURFACE COURSE (1/2") - MINERAL AGGREGATE = 95.0%, ASPHALT BINDER (PG 70-22) = 5.0%

Nmax = 115 (PG 64-22)
Nmax = 160 (PG 70-22)

QUANTITY SHEETS

DATE REVISED	DATE FILMED	DATE REVISED	DATE FILMED	FED. ROAD DIST. NO.	STATE	FED. AID PROJ. NO.	SHEET NO.	TOTAL SHEETS
5-19-14				6	ARK.			
				JOB NO.		061276	134	438
				1 A&B7282 A&B7283		QUANTITIES		53581

BRIDGE NUMBER	CODE NUMBER	NAME PLATE TITLE	UNIT OF STRUCTURE	ITEM NUMBER	205	619	801	802	802	803	804	804	805	807	807	SP & 808	809	812	816	SP JOB 061276
				ITEM	REMOVAL OF EXISTING BRIDGE STRUCTURE (SITE NO. _)	7' STEEL CHAIN LINK FENCE	UNCLASSIFIED EXCAVATION FOR STRUCTURES - BRIDGE	CLASS S CONCRETE - BRIDGE	CLASS S(AE) CONCRETE - BRIDGE	CLASS I PROTECTIVE SURFACE TREATMENT	REINFORCING STEEL - BRIDGE (GRADE 60)	EPOXY COATED REINFORCING STEEL (GRADE 60)	STEEL PILING (HP 12 x 53) [1] [3]	STRUCTURAL STEEL IN BEAM SPANS (M 270, GRADE 50)	PAINTING STRUCTURAL STEEL [2]	ELASTOMERIC BEARINGS	SILICONE JOINT SEALANT	BRIDGE NAME PLATE (TYPE D)	CONCRETE RIPRAP	SHORING
				UNIT	LUMP SUM	LINEAR FOOT	CUBIC YARD	CUBIC YARD	CUBIC YARD	GALLON	POUND	POUND	LINEAR FOOT	POUND	TON	CUBIC INCH	LINEAR FOOT	EACH	CUBIC YARD	LUMP SUM
A7282	X571	REDMOND ROAD	END BENT NOS. 1 AND 5					89.02		0.5	10,905	1,007	960	~~2,319~~ 2,225 ⚠	1.2	9,284.0			124	
			INT. BENT NOS. 2-4				136	280.18			45,585		1,584			13,302.0				
			280' CONT. COMP. W-BEAM UNIT			104			470.90	41.9		128,083		~~425,768~~ ~~399,311~~ ⚠	~~212.8~~ ~~199.8~~		122	1		
			SITE NO. 1 (BRIDGE 03077)		1															
			TOTALS FOR BRIDGE NO. A7282			104	136	369.20	470.90	42.4	56,490	129,090	2,544	~~427,993~~ ~~401,630~~ ⚠	~~214.0~~ ~~201.0~~	22,586.0	122	1	124	1
B7282	X571	REDMOND ROAD	END BENT NOS. 1 AND 5				29	99.40		0.5	12,204	1,146	1,152	~~2,629~~ 2,541 ⚠	1.2	10,444.6			148	
			INT. BENT NOS. 2-4				150	352.70			53,276		2,400			14,964.4				
			280' CONT. COMP. W-BEAM UNIT						530.60	47.4		147,724		~~479,758~~ ~~449,691~~ ⚠	~~239.8~~ ~~224.8~~		139	1		
			SITE NO. 2 (BRIDGE A3077)		1															
			TOTALS FOR BRIDGE NO. B7282				179	452.10	530.60	47.9	65,480	148,870	3,552	~~482,299~~ ~~452,320~~ ⚠	~~241.0~~ ~~226.0~~	25,409.0	139	1	148	
A7283	X271	MAIN STREET	END BENT NOS. 1 AND 4					106.67		0.6	11,689	1,200	873	2,780	1.4	8,820.0			138	
			INT. BENT NOS. 2-3				257	230.53			33,091		1,056							
			237' CONT. COMP. W-BEAM UNIT						462.40	38.1		126,880		469,740	234.6	23,870.0	146	1		
			SITE NO. 3 (BRIDGE 3078)		1															1
			TOTALS FOR BRIDGE NO. A7283				257	337.20	462.40	38.7	44,780	128,080	1,929	472,520	236.0	32,690.0	146	1	138	
B7283	X271	MAIN STREET	END BENT NOS. 1 AND 4					98.62		0.6	10,809	1,054	707	2,450	1.2	7,717.7			99	
			INT. BENT NOS. 2-3				266	229.58			30,701		1,032							
			238' CONT. COMP. W-BEAM UNIT						416.20	34.0		112,256		410,360	204.8	20,886.3	130	1		
			SITE NO. 4 (BRIDGE A3078)		1															
			TOTALS FOR BRIDGE NO. B7283				266	328.20	416.20	34.6	41,510	113,310	1,739	412,810	206.0	28,604.0	130	1	99	
			TOTALS FOR JOB NO. 061276		--	104	838	1486.70	1880.10	163.6	208,260	519,350	9,764	~~1,739,280~~ 1,795,622 ⚠	~~869.0~~ 897.0	109,289.0	537	4	509	2

[1] These steel piles are required to be Grade 50 and have special tips which will not be paid for directly but will be considered subsidiary to the item STEEL PILING (HP 12x53.)

[2] The color of paint shall conform to Federal Standard 595B, Color Chip No. 37200, Aluminum.

[3] The quantities shown for steel piling are for estimating and bidding purposes only. Actual quantities for steel piling will be determined in the field.

⚠ Revised structural steel quantities. LWM 5-19-14

STATE OF ARKANSAS REGISTERED PROFESSIONAL ENGINEER LARRY W. MILLER No. 11339

Larry W. Miller 8-19-13

BRIDGE ENGINEER

SCHEDULE OF BRIDGE QUANTITIES
REDMOND RD. & MAIN ST.
STRS. & APPRS. (JACKSONVILLE) (F)
PULASKI COUNTY

ROUTE 67 SEC. 10

ARKANSAS STATE HIGHWAY COMMISSION

LITTLE ROCK, ARK.

DRAWN BY: LM DATE: 02-13 FILENAME: b061276m1_q.dgn
CHECKED BY: GS DATE: 03-01-13 SCALE: NONE
DESIGNED BY: LM DATE: 02-13
BRIDGE NO. A&B7282 A&B7283 DRAWING NO. 53581

b061276M1_Q.dgn 5/19/2014 10:42:42 AM

SUMMARY OF QUANTITIES (SHEET 1 OF 3)

	ITEM NUMBER	ITEM		QUANTITY	UNIT
	201	CLEARING		60	STATION
	201	GRUBBING		60	STATION
	202	REMOVAL AND DISPOSAL OF CURB AND GUTTER		214	LIN. FT.
	SP & 202	REMOVAL OF EXISTING PORTLAND CEMENT CONCRETE PAVEMENT		66020	SQ. YD.
	202	REMOVAL AND DISPOSAL OF CONCRETE ISLANDS		361	SQ. YD.
	202	REMOVAL AND DISPOSAL OF CONCRETE DRIVEWAYS		299	SQ. YD.
	SP	REMOVAL AND DISPOSAL OF CONCRETE DITCH PAVING		2465	LIN. FT.
	202	REMOVAL AND DISPOSAL OF WALKS		638	SQ. YD.
	202	REMOVAL AND DISPOSAL OF DROP INLETS		23	EACH
	202	REMOVAL AND DISPOSAL OF PIPE CULVERTS		31	EACH
	SP	REMOVAL AND DISPOSAL OF WIRE ROPE SAFETY FENCE		2465	LIN. FT.
	SP & 202	REMOVAL AND DISPOSAL OF GUARDRAIL		3025	LIN. FT.
	202	REMOVAL AND DISPOSAL OF CONCRETE MEDIAN BARRIER		5111	LIN. FT.
	SP	REMOVAL AND DISPOSAL OF OVERHEAD SIGN STRUCTURE		1	EACH
	202	REMOVAL AND DISPOSAL OF SIGNS		7	EACH
	202	REMOVAL AND DISPOSAL OF BILLBOARDS		3	EACH
	202	REMOVAL AND DISPOSAL OF SIGN FOUNDATIONS		11	EACH
	202	REMOVAL AND DISPOSAL OF LUMINAIRE POLE AND FOUNDATION		13	EACH
	202	REMOVAL AND DISPOSAL OF DECORATIVE LIGHT POLE		3	EACH
	202	REMOVAL AND DISPOSAL OF FENCE		146	LIN. FT.
	210	UNCLASSIFIED EXCAVATION		40432	CU. YD.
	210	COMPACTED EMBANKMENT		263216	CU. YD.
	SP & 210	SOIL STABILIZATION		100	TON
	SP	SELECT GRANULAR BACKFILL		39516	CU. YD.
	302	SELECTED MATERIAL (CLASS SM-1)		831	CU. YD.
	303	AGGREGATE BASE COURSE (CLASS 7)		16032	TON
	308	AGGREGATE IN CEMENT STABILIZED CRUSHED STONE BASE COURSE		34884	TON
	308	CEMENT IN CEMENT STABILIZED CRUSHED STONE BASE COURSE		2227	TON
	308	PROCESSING CEMENT STABILIZED CRUSHED STONE BASE COURSE		106031	SQ. YD.
	309	PORTLAND CEMENT CONCRETE BASE (4" UNIFORM THICKNESS)		465	SQ. YD.
	309	PORTLAND CEMENT CONCRETE BASE (6" UNIFORM THICKNESS)		563	SQ. YD.
	309	PORTLAND CEMENT CONCRETE BASE (10" UNIFORM THICKNESS)		1335	SQ. YD.
	401	TACK COAT		6910	GAL.
	SP & 405	MINERAL AGGREGATE IN ACHM BASE COURSE (1 1/2")		14390	TON
	SP & 405	ASPHALT BINDER (PG 64-22) IN ACHM BASE COURSE (1 1/2")		568	TON
	SP, SS, & 406	MINERAL AGGREGATE IN ACHM BINDER COURSE (1")		4052	TON
	SP, SS, & 406	ASPHALT BINDER (PG 64-22) IN ACHM BINDER COURSE (1")		186	TON
	SP, SS, & 407	MINERAL AGGREGATE IN ACHM SURFACE COURSE (3/8")		5552	TON
	SP, SS, & 407	ASPHALT BINDER (PG 64-22) IN ACHM SURFACE COURSE (3/8")		292	TON
	SP, SS, & 407	MINERAL AGGREGATE IN ACHM SURFACE COURSE (1/2")		4542	TON
	SP, SS, & 407	ASPHALT BINDER (PG 64-22) IN ACHM SURFACE COURSE (1/2")		17	TON
	SP, SS, & 407	ASPHALT BINDER (PG 70-22) IN ACHM SURFACE COURSE (1/2")		222	TON
	412	COLD MILLING ASPHALT PAVEMENT		1500	SQ. YD.
	SP & 414	ASPHALT CONCRETE PATCHING FOR MAINTENANCE OF TRAFFIC		100	TON
	501	PORTLAND CEMENT CONCRETE PAVEMENT (12" UNIFORM THICKNESS)		100329	SQ. YD.
	504	APPROACH SLABS		559.87	CU. YD.
	504	APPROACH GUTTERS		266.25	CU. YD.
	505	PORTLAND CEMENT CONCRETE DRIVEWAY		275	SQ. YD.
	506	PORTLAND CEMENT CONCRETE CORRUGATIONS		329	SQ. YD.
	513	REMOVAL OF EXISTING ASPHALT OVERLAY		15135	SQ. YD.
	601	MOBILIZATION		1.00	LUMP SUM
	SP & 602	FURNISHING FIELD OFFICE		1	EACH
	602	FURNISHING FIELD LABORATORY		1	EACH
	SP & 603	MAINTENANCE OF TRAFFIC		1.00	LUMP SUM
	SP & 603	TRAFFIC CONTROL SUPERVISOR		1.00	LUMP SUM
	604	ADVANCE WARNING ARROW PANEL		900	DAY
	SP & 604	PORTABLE CHANGEABLE MESSAGE SIGN		250	WEEK
	604	SIGNS		2662	SQ. FT.
	604	BARRICADES		80	LIN. FT.
	604	TRAFFIC DRUMS		552	EACH
	604	FURNISHING AND INSTALLING PRECAST CONCRETE BARRIER		36702	LIN. FT.
	604	RELOCATING PRECAST CONCRETE BARRIER		23301	LIN. FT.
	604	CONSTRUCTION PAVEMENT MARKINGS		15857	LIN. FT.
	604	REMOVABLE CONSTRUCTION PAVEMENT MARKINGS		56537	LIN. FT.
	604	REMOVAL OF PERMANENT PAVEMENT MARKINGS		3925	LIN. FT.
	604	VERTICAL PANELS		30	EACH
	SP & 605	CONCRETE DITCH PAVING (TYPE A)		50	SQ. YD.
	SP & 605	CONCRETE DITCH PAVING (TYPE B)		4934	SQ. YD.
	606	18" REINFORCED CONCRETE PIPE CULVERTS (CLASS III)		170	LIN. FT.
*	606	18" REINFORCED CONCRETE PIPE CULVERTS (CLASS III)	(ALTERNATE NO. 1)	228	LIN. FT.
**	606	18" SMOOTH LINED POLYMER PRECOATED METALLIC COATED CORRUGATED STEEL PIPE	(ALTERNATE NO. 2)	228	LIN. FT.
	606	24" REINFORCED CONCRETE PIPE CULVERTS (CLASS III)		2194	LIN. FT.
*	606	24" REINFORCED CONCRETE PIPE CULVERTS (CLASS III)	(ALTERNATE NO. 1)	258	LIN. FT.
**	606	24" SMOOTH LINED POLYMER PRECOATED METALLIC COATED CORRUGATED STEEL PIPE	(ALTERNATE NO. 2)	258	LIN. FT.
	606	24" REINFORCED CONCRETE PIPE CULVERTS (CLASS IV)		106	LIN. FT.
	606	24" REINFORCED CONCRETE PIPE CULVERTS (CLASS V)		60	LIN. FT.
	606	36" REINFORCED CONCRETE PIPE CULVERTS (CLASS III)		236	LIN. FT.
*	606	36" REINFORCED CONCRETE PIPE CULVERTS (CLASS III)	(ALTERNATE NO. 1)	168	LIN. FT.
**	606	36" SMOOTH LINED POLYMER PRECOATED METALLIC COATED CORRUGATED STEEL PIPE	(ALTERNATE NO. 2)	168	LIN. FT.
	606	36" REINFORCED CONCRETE PIPE CULVERTS (CLASS IV)		422	LIN. FT.
	SP & 606	36" REINFORCED CONCRETE PIPE CULVERTS (CLASS V)		204	LIN. FT.
	606	42" REINFORCED CONCRETE PIPE CULVERTS (CLASS III)		50	LIN. FT.
*	606	42" REINFORCED CONCRETE PIPE CULVERTS (CLASS III)	(ALTERNATE NO. 1)	234	LIN. FT.
**	606	42" SMOOTH LINED POLYMER PRECOATED METALLIC COATED CORRUGATED STEEL PIPE	(ALTERNATE NO. 2)	234	LIN. FT.
***	606	48" REINFORCED CONCRETE PIPE CULVERTS (CLASS III)	(ALTERNATE NO. 1)	660	LIN. FT.
*	606	48" SMOOTH LINED POLYMER PRECOATED METALLIC COATED CORRUGATED STEEL PIPE	(ALTERNATE NO. 2)	660	LIN. FT.
	606	12" ZINC COATED (GALVANIZED) CORRUGATED STEEL PIPE CULVERTS (16 GAUGE)		80	LIN. FT.
	606	18" ALUMINUM COATED CORRUGATED STEEL PIPE CULVERTS (16 GAUGE)		8	LIN. FT.
	SP & 606	18" SIDE DRAIN		52	LIN. FT.
	SP & 606	24" SIDE DRAIN		68	LIN. FT.
	606	18" FLARED END SECTIONS FOR REINFORCED CONCRETE PIPE CULVERTS		2	EACH
	606	24" FLARED END SECTIONS FOR REINFORCED CONCRETE PIPE CULVERTS		15	EACH
	606	SELECTED PIPE BEDDING		100	CU. YD.
	609	DROP INLETS (TYPE E)		2	EACH
	609	DROP INLETS (TYPE N2)		1	EACH
	609	DROP INLETS (TYPE MO)		16	EACH
	609	DROP INLETS (TYPE RM)		4	EACH
	609	DROP INLETS (TYPE ST)		19	EACH

** DENOTES ALTERNATE BID ITEMS

SUMMARY OF QUANTITIES



r061276.qty.dgn 5/23/2014 10:55:34 AM

DATE REVISED	DATE FILMED
5/23/14	

SUMMARY OF QUANTITIES (BOX 2 OF 3)

ITEM NUMBER	ITEM		QUANTITY	UNIT
609	JUNCTION BOXES (TYPE E)		2	EACH
609	DROP INLET EXTENSIONS (4')		8	EACH
609	DROP INLET EXTENSIONS (8')		3	EACH
610	DROP INLETS ADJUSTED TO GRADE		2	EACH
611	UNDERDRAIN OUTLET PROTECTORS		5	EACH
611	4" PIPE UNDERDRAINS		1000	LIN. FT.
614	CONCRETE SPILLWAY (TYPE A)		1	EACH
615	PAVEMENT REPAIR OVER CULVERTS (ASPHALT)		178	TON
617	GUARDRAIL (TYPE A)		1375	LIN. FT.
617	TERMINAL ANCHOR POSTS (TYPE 1)		5	EACH
617	GUARDRAIL TERMINAL (TYPE 2)		6	EACH
617	THRIE BEAM GUARDRAIL TERMINAL		1	EACH
SP	WIRE ROPE SAFETY FENCE		1510	LIN. FT.
SP	WIRE ROPE SAFETY FENCE (POST REPAIR)		50	EACH
SP	TEMPORARY TERMINAL ANCHOR FOR WIRE ROPE SAFETY FENCE		1	EACH
620	LIME		37	TON
620	SEEDING		18.50	ACRE
SS & 620	MULCH COVER		37.00	ACRE
620	WATER		4200.3	M. GAL.
621	TEMPORARY SEEDING		18.50	ACRE
621	SILT FENCE		13900	LIN. FT.
621	SAND BAG DITCH CHECKS		902	BAG
621	DIVERSION DITCH		973	LIN. FT.
621	DROP INLET SILT FENCE		736	LIN. FT.
621	SEDIMENT REMOVAL AND DISPOSAL		642	CU. YD.
621	PIPE FOR SLOPE DRAINS		257	LIN. FT.
623	SECOND SEEDING APPLICATION		18.50	ACRE
624	SOLID SODDING		3887	SQ. YD.
625	GEOTEXTILE FABRIC (TYPE 5)		12	SQ. YD.
631	CONCRETE BARRIER WALL (MEDIAN TYPE A)		5523	LIN. FT.
631	CONCRETE BARRIER WALL (PARAPET TYPE B)		828	LIN. FT.
631	CONCRETE BARRIER WALL (PARAPET TYPE C)		1367	LIN. FT.
SP & 631	CONCRETE BARRIER WALL (SIDE TYPE A)		4721	LIN. FT.
632	CONCRETE ISLAND		677	SQ. YD.
633	CONCRETE WALKS		841	SQ. YD.
633	HAND RAILING		21	LIN. FT.
634	CONCRETE COMBINATION CURB AND GUTTER (TYPE A) (1' 6")		3709	LIN. FT.
634	INTEGRAL CURB (TYPE A)		1665	LIN. FT.
635	ROADWAY CONSTRUCTION CONTROL		1.00	LUMP SUM
640	MODIFYING DROP INLETS		1	EACH
641	WHEELCHAIR RAMPS (TYPE 3)		4	SQ. YD.
641	WHEELCHAIR RAMPS (TYPE 4)		44	SQ. YD.
SP & 706	TRAFFIC SIGNAL HEAD, LED, (3 SECTION, 1 WAY)		14	EACH
SP & 706	TRAFFIC SIGNAL HEAD, LED, (4 SECTION, 1 WAY)		3	EACH
SP & 707	COUNTDOWN PEDESTRIAN SIGNAL HEAD, LED		10	EACH
708	TRAFFIC SIGNAL CABLE (5C/14 A.W.G.)		8594	LIN. FT.
708	TRAFFIC SIGNAL CABLE (7C/14 A.W.G.)		221	LIN. FT.
708	TRAFFIC SIGNAL CABLE (12C/14 A.W.G.)		1737	LIN. FT.
708	TRAFFIC SIGNAL CABLE (20C/14 A.W.G.)		1193	LIN. FT.
710	NON-METALLIC CONDUIT (3")		1993	LIN. FT.
711	CONCRETE PULL BOX (TYPE 1)		3	EACH
711	CONCRETE PULL BOX (TYPE 1 HD)		1	EACH
711	CONCRETE PULL BOX (TYPE 2)		8	EACH
711	CONCRETE PULL BOX (TYPE 2 HD)		9	EACH
714	TRAFFIC SIGNAL MAST ARM AND POLE WITH FOUNDATION (22')		2	EACH
714	TRAFFIC SIGNAL MAST ARM AND POLE WITH FOUNDATION (28')		1	EACH
SP	TRAFFIC SIGNAL CONTROLLER (MODIFICATION)		1	EACH
715	TRAFFIC SIGNAL PEDESTAL POLE WITH FOUNDATION		4	EACH
718	REFLECTORIZED PAINT PAVEMENT MARKING WHITE (10")		772	LIN. FT.
718	REFLECTORIZED PAINT PAVEMENT MARKING YELLOW (10")		150	LIN. FT.
719	THERMOPLASTIC PAVEMENT MARKING WHITE (4")		5874	LIN. FT.
719	THERMOPLASTIC PAVEMENT MARKING WHITE (8")		1248	LIN. FT.
719	THERMOPLASTIC PAVEMENT MARKING WHITE (12")		1269	LIN. FT.
719	THERMOPLASTIC PAVEMENT MARKING YELLOW (4")		7037	LIN. FT.
719	THERMOPLASTIC PAVEMENT MARKING (WORDS)		12	EACH
719	THERMOPLASTIC PAVEMENT MARKING (ARROWS)		19	EACH
719	THERMOPLASTIC PAVEMENT MARKING (YIELD LINE)		36	LIN. FT.
* SP & 719	INVERTED PROFILE THERMOPLASTIC PAVEMENT MARKING WHITE (4")	(ALTERNATE NO. 1)	19397	LIN. FT.
** SP	HIGH PERFORMANCE MARKING TAPE WHITE (4")	(ALTERNATE NO. 2)	19397	LIN. FT.
** SP & 719	INVERTED PROFILE THERMOPLASTIC PAVEMENT MARKING YELLOW (4")	(ALTERNATE NO. 1)	19156	LIN. FT.
** SP	HIGH PERFORMANCE MARKING TAPE YELLOW (4")	(ALTERNATE NO. 2)	19156	LIN. FT.
** SP & 719	INVERTED PROFILE THERMOPLASTIC PAVEMENT MARKING WHITE (8")	(ALTERNATE NO. 1)	3996	LIN. FT.
** SP	HIGH PERFORMANCE MARKING TAPE WHITE (8")	(ALTERNATE NO. 2)	3996	LIN. FT.
*** SP & 719	INVERTED PROFILE THERMOPLASTIC CONTRAST PAVEMENT MARKING WHITE (4")	(ALTERNATE NO. 1)	6866	LIN. FT.
*** SP	HIGH PERFORMANCE CONTRAST MARKING TAPE WHITE (4")	(ALTERNATE NO. 2)	6866	LIN. FT.
721	RAISED PAVEMENT MARKERS (TYPE II)		995	EACH
SP	RELOCATION OF EXISTING OVERHEAD SIGN STRUCTURE (OH-067-60-26)		1	EACH
SP	STEEL OVERHEAD SIGN STRUCTURE (OH-067-60-23)		1	EACH
SP	STEEL OVERHEAD SIGN STRUCTURE (OH-067-60-29)		1	EACH
725	GUIDE SIGN - ROADSIDE MOUNTED (DEMOUNTABLE LEGEND)		764	SQ. FT.
725	GUIDE SIGN - OVERHEAD MOUNTED (DEMOUNTABLE LEGEND)		561	SQ. FT.
726	STANDARD SIGN		614	SQ. FT.
727	EXIT NUMBER PANEL (TYPE A)		93	SQ. FT.
730	BREAKAWAY SIGN SUPPORT (TYPE G-2)		11351	POUND
731	TEMPORARY IMPACT ATTENUATION BARRIER		3	EACH
731	TEMPORARY IMPACT ATTENUATION BARRIER (REPAIR)		1	EACH
732	CRASH CUSHION		3	EACH
SP & 733	VIDEO DETECTOR (CLR)		13	EACH
733	VIDEO CABLE		5105	LIN. FT.
SP	18" STREET NAME SIGN		2	EACH
SP	ELECTRICAL CONDUCTORS-IN-CONDUIT (1C/8 A.W.G., EGC)		1544	LIN. FT.
SP	ELECTRICAL CONDUCTORS-IN-CONDUIT (1C/12 A.W.G., EGC)		294	LIN. FT.
SP	ELECTRICAL CONDUCTORS FOR LUMINAIRES		1935	LIN. FT.
SP	LUMINAIRE ASSEMBLY		2	EACH
SP	RELOCATION OF VMS ASSEMBLY		1	EACH
SP	RELOCATION OF CAMERA ASSEMBLY		1	EACH
SP	RELOCATION OF EXISTING OVERHEAD SIGNS		5	EACH

* DENOTES ALTERNATE BID ITEMS

SUMMARY OF QUANTITIES



DATE REVISED	DATE FILED	DATE REVISED	DATE FILED	FED. RD. DIST. NO.	STATE	FED. AID PROJ. NO.	SHEET NO.	TOTAL SHEETS
5/23/14				6	ARK.	061276	136	438

(2) SUMMARY OF QUANTITIES

r061276.qty.dgn 5/23/2014 9:41:00 AM

SUMMARY OF QUANTITIES (BOX 3 OF 3)

ITEM NUMBER	ITEM	QUANTITY	UNIT
802	CLASS S CONCRETE-ROADWAY	94.68	CU. YD.
SP	MSE RETAINING WALL	63880	SQ. FT.
SP	TEMPORARY RETAINING WALL	59007	SQ. FT.
SP	RETAINING WALL	564	SQ. FT.
804	REINFORCING STEEL-ROADWAY (GRADE 60)	87061	POUND
816	DUMPED RIPRAP	19	CU. YD.

STRUCTURES OVER 20' SPAN			
205	REMOVAL OF EXISTING BRIDGE STRUCTURE (SITE NO. 1)	1.00	LUMP SUM
205	REMOVAL OF EXISTING BRIDGE STRUCTURE (SITE NO. 2)	1.00	LUMP SUM
205	REMOVAL OF EXISTING BRIDGE STRUCTURE (SITE NO. 3)	1.00	LUMP SUM
205	REMOVAL OF EXISTING BRIDGE STRUCTURE (SITE NO. 4)	1.00	LUMP SUM
619	7' STEEL CHAIN LINK FENCE	104	LIN. FT.
636	BRIDGE CONSTRUCTION CONTROL	1.00	LUMP SUM
801	UNCLASSIFIED EXCAVATION FOR STRUCTURES-ROADWAY	127	CU. YD.
801	UNCLASSIFIED EXCAVATION FOR STRUCTURES-BRIDGE	838	CU. YD.
802	CLASS S CONCRETE-ROADWAY	257.39	CU. YD.
802	CLASS S CONCRETE-BRIDGE	1486.70	CU. YD.
802	CLASS S(AE) CONCRETE-BRIDGE	1880.10	CU. YD.
803	CLASS 1 PROTECTIVE SURFACE TREATMENT	163.6	GAL.
804	REINFORCING STEEL-ROADWAY (GRADE 60)	34759	POUND
804	REINFORCING STEEL-BRIDGE (GRADE 60)	208260	POUND
804	EPOXY COATED REINFORCING STEEL (GRADE 60)	519350	POUND
805	STEEL PILING (HP 12X53)	9764	LIN. FT.
807	STRUCTURAL STEEL IN BEAM SPANS (M270-GR50) 1795622	~~1739280~~	POUND
807	PAINTING STRUCTURAL STEEL 897.0	~~869.0~~	TON
SP & 808	ELASTOMERIC BEARINGS	109289.0	CU. IN.
809	SILICONE JOINT SEALANT	537	LIN. FT.
812	BRIDGE NAME PLATE (TYPE D)	4	EACH
816	CONCRETE RIPRAP	509	CU. YD.
SP	SHORING	2.00	LUMP SUM

REVISIONS

DATE	REVISION	SHEET NUMBER
5/2/2014	ADDED SPECIAL PROVISION - COORDINATION OF WORK	4,137
5/19/2014	REVISED STRUCTURAL STEEL QUANTITIES	134, 137
5/23/2014	REVISED BASE AND SURFACING QUANTITIES, EARTHWORK QUANTITIES, AND ADDED PAY ITEMS "CONCRETE BARRIER WALL (PARAPET TYPE C)" AND "REMOVAL OF EXISTING ASPHALT OVERLAY". ADDED PARAPET TYPE C SPECIAL DETAIL TO PLANS.	23, 127, 128, 131, 132, 133, 135, 136, 137
5/23/2014	ADDED FINISHED GROUND, EXISTING GROUND, AND DITCH ELEVATIONS TO MSE RETAINING WALL SHEETS. REVISED RETAINING WALL DETAILS	137, 281-288, 290

DATE REVISED	DATE FILMED	DATE REVISED	DATE FILMED
5/2/2014			
5/19/14			
5/23/14			

FED.RD. DIST.NO.	STATE	FED.AID PROJ.NO.	SHEET NO.	TOTAL SHEETS
6	ARK.			
JOB NO.	061276		137	438

2 SUMMARY OF QUANTITIES AND REVISIONS

STATE OF ARKANSAS REGISTERED PROFESSIONAL ENGINEER No. 9808 JAMES L. BARR 5/23/14

SUMMARY OF QUANTITIES AND REVISIONS

r061276.qty.dgn 5/27/2014 9:01:41 AM

DATE REVISED	DATE FILMED	DATE REVISED	DATE FILMED	FED.RD. DIST.NO.	STATE	FED.AID PROJ.NO.	SHEET NO.	TOTAL SHEETS
				6	ARK.			
				JOB NO.		061276	138	438

(2) **SURVEY CONTROL DETAILS**

SURVEY CONTROL COORDINATES

Project Name: s061276
Date: 10/8/2010
Coordinate System: ARKANSAS STATE PLANE - NORTH ZONE BASED ON GPS CONTROL, PROJECTED TO GROUND.
Units: U.S. SURVEY FOOT

Point Name	Northing	Easting	Elev	Feature	Description
73	189137.8375	1270476.9500	246.48	CTL	5/8" REBAR WITH 2" ALUMINUM CAP
74	189891.4473	1271365.2716	247.00	CTL	5/8" REBAR WITH 2" ALUMINUM CAP
75	190611.4443	1272260.9673	247.44	CTL	5/8" REBAR WITH 2" ALUMINUM CAP
76	191470.7366	1273001.8448	256.02	CTL	5/8" REBAR WITH 2" ALUMINUM CAP
77	191920.1555	1273253.0048	273.71	CTL	5/8" REBAR WITH 2" ALUMINUM CAP
78	192546.7820	1273483.3860	275.64	CTL	5/8" REBAR WITH 2" ALUMINUM CAP
79	193699.0104	1273787.8190	256.90	CTL	5/8" REBAR WITH 2" ALUMINUM CAP
80	194576.7618	1274100.5063	272.55	CTL	5/8" REBAR WITH 2" ALUMINUM CAP
81	195577.2856	1275052.5096	266.81	CTL	5/8" REBAR WITH 2" ALUMINUM CAP
82	196421.1141	1275952.6303	276.37	CTL	5/8" REBAR WITH 2" ALUMINUM CAP
83	197070.7766	1276626.0481	285.80	CTL	5/8" REBAR WITH 2" ALUMINUM CAP
100	181626.0186	1258929.4501	267.53	CTL	GPS 600039 AHTD CAP
101	180767.7635	1257920.0889	282.90	CTL	GPS 600039A AHTD CAP
102	181126.3543	1267262.2486	260.10	CTL	GPS 600045A REBAR WITH 2" ALUMINUM CAP
103	182976.8749	1266611.7308	265.34	CTL	GPS 600045 REBAR WITH 2" ALUMINUM CAP
104	200721.5078	1280117.2802	272.51	CTL	GPS 600026A REBAR WITH 2" ALUMINUM CAP
105	202101.8471	1280720.7353	297.16	CTL	GPS 600026 REBAR WITH 2" ALUMINUM CAP
130	192263.0843	1273229.7934	259.17	CTL	COTTON PICKER SPINDLE
131	192104.0915	1273470.7603	259.36	CTL	COTTON PICKER SPINDLE
132	194430.3421	1274271.7510	261.21	CTL	COTTON PICKER SPINDLE
133	194479.7230	1273803.3800	256.74	CTL	5/8" REBAR WITH 2" ALUMINUM CAP
134	195174.6875	1274461.1089	271.30	CTL	5/8" REBAR WITH 2" ALUMINUM CAP
135	197516.7201	1276769.0923	303.51	CTL	5/8" REBAR WITH 2" ALUMINUM CAP
136	196946.1742	1276805.1280	306.65	CTL	5/8" REBAR WITH 2" ALUMINUM CAP
137	201476.5054	1280464.5437	281.45	CTL	5/8" REBAR WITH 2" ALUMINUM CAP
138	201847.6129	1280063.4550	279.80	CTL	5/8" REBAR WITH 2" ALUMINUM CAP
139	201773.4267	1279978.2342	278.62	CTL	5/8" REBAR WITH 2" ALUMINUM CAP
971	192131.1255	1273343.8538	278.31	TBM	SQUARE CUT SOUTHWEST CORNER BRIDGE NORTHBOUND 67
972	194356.3177	1273988.0742	273.35	TBM	SQUARE CUT SOUTHWEST CORNER BRIDGE NORTHBOUND 67
973	195734.2223	1275205.3822	264.07	TBM	SQUARE CUT CENTER DROP INLET
974	196945.7896	1276804.5507	306.61	BM	AHTD DISK NORTHEAST CORNER CATCH BASIN
983	-99999.0000	-99999.0000	247.35	BM	AHTD DISC NORTHEAST CORNER BRIDGE, 440 NORTHBOUND ON RAMP 67
998	-99999.0000	-99999.0000	250.11	BM	NORTHEAST CORNER CONCRETE RAILROAD CROSSING
999	-99999.0000	-99999.0000	244.70	BM	NGS RV 159 RIVET IN HEADWALL

*Note - Rebar and Cap - Standard -"- Rebar with 2" Aluminum Cap stamped
*(standard markings common to all caps), or as indicated
(other markings indicated in the point description of the individual point).
ALL DISTANCES ARE GROUND.
USE CAF = 1.0 FOR STAKEOUT FOR THIS PROJECT.
A PROJECT CAF OF 1.000039357 HAS BEEN USED TO COMPUTE THE GROUND COORDINATES ABOVE.
THIS CAF IS BASED ON JOB R60081
THIS CAF IS INTENDED FOR USE WITHIN THE PROJECT LIMITS.
GRID DISTANCE = GROUND DISTANCE X CAF.
GRID COORDINATES ARE STORED UNDER FILE NAME r6008lgi.ctl
HORIZONTAL DATUM: NAD 83 (1997)
VERTICAL DATUM: NAVD 88 POSITIONAL ACCURACY THIRD ORDER, UNLESS SPECIFIED OTHERWISE AT A SPECIFIC POINT.

REFERENCE POINTS (1500 SERIES) ARE TO BE USED TO ESTABLISH CONTROL IF THE PRIMARY CONTROL POINTS LISTED ABOVE HAVE BEEN DESTROYED.
REFERENCE POINTS ARE NOT TO BE USED FOR VERTICAL CONTROL

BASIS OF BEARING:
ARKANSAS STATE PLANE GRID BEARINGS - 0301-NORTH ZONE
DETERMINED FROM GPS CONTROL POINTS: 600026 - 600026A, 600039 - 600039A, 600045 - 600045A
CONVERGENCE ANGLE: 0- 4- 39.4 RIGHT AT 34-51-25.0 LG: 92-08-00.2
GRID AZIMUTH = ASTRONOMICAL AZIMUTH - CONVERGENCE ANGLE.

CONSTRUCTION C.L.

HORIZONTAL ALIGNMENT — HWY. 67

DESCRIPTION	POINT	STATION	NORTHING	EASTING
POB	8007	440+40.80	184036.4801	1263798.9419
PC	8025	545+50.43	190527.0985	1272064.7810
PT	8027	569+25.02	192463.0343	1273373.0606
PC	8028	586+11.01	194081.7400	1273844.5889
PT	8030	598+20.53	195102.6220	1274466.7549
PI	8010	599+85.24	195216.0470	1274586.1911
PI	8011	611+85.24	196038.1456	1275460.3503
POE	8012	618+93.46	196524.0461	1275975.5906

HORIZONTAL ALIGNMENT — REDMOND RD.

DESCRIPTION	POINT	STATION	NORTHING	EASTING
POB	8059	31+00.00	192647.9692	1272509.0545
PC	8060	33+21.74	192591.2944	1272723.4336
PT	8062	35+67.89	192489.1217	1272946.0420
PI	8063	43+28.36	192058.3860	1273572.7664
PI	8064	46+28.36	191898.3020	1273826.4849
POE	8093	47+00.00	191898.3020	1273826.4849

HORIZONTAL ALIGNMENT — REDMOND RD. RAMP 1

DESCRIPTION	POINT	STATION	NORTHING	EASTING
POC	8047	553+10.36	191019.1741	1272651.1866
PC	8048	560+45.93	191578.8361	1273128.5210
PT	8050	562+67.25	191762.2958	1273251.4344
POE	8998	566+96.78	192144.3811	1273447.6427

HORIZONTAL ALIGNMENT — REDMOND RD. RAMP 4

DESCRIPTION	POINT	STATION	NORTHING	EASTING
PC	8031	545+69.42	190585.3908	1272041.0548
PT	8033	556+11.25	191362.0893	1272726.6053
PC	8052	556+40.05	191386.7705	1272741.6487
PT	8054	562+90.46	192011.8473	1272868.9456
PC	8055	564+14.85	192135.0152	1272851.6326
PT	8057	567+54.86	192458.4394	1272927.7850
POE	8058	567+90.48	192487.8005	1272947.9644

HORIZONTAL ALIGNMENT — MAIN ST.

DESCRIPTION	POINT	STATION	NORTHING	EASTING
POB	8037	194+00.00	194455.0591	1273379.3232
PC	8085	202+05.96	194425.0072	1274184.7201
PT	8039	203+76.14	194360.0097	1274337.9597
POE	8073	205+00.09	194274.1691	1274427.3730

HORIZONTAL ALIGNMENT — MAIN ST. RAMP 1

DESCRIPTION	POINT	STATION	NORTHING	EASTING
PC	8066	571+29.02	192644.4817	1273479.5567
PT	8068	572+49.92	192759.4143	1273517.0213
PC	8091	577+71.08	193198.7585	1273675.7839
PT	8094	578+91.09	193364.8800	1273727.3907
PI	8095	581+51.76	193617.0767	1273793.3066

HORIZONTAL ALIGNMENT — MAIN ST. RAMP 4

DESCRIPTION	POINT	STATION	NORTHING	EASTING
PC	8087	580+54.65	193561.9829	1273639.5434
PT	8089	584+73.29	193973.4841	1273711.8153
POE	8090	589+42.30	194441.5290	1273741.9324

HORIZONTAL ALIGNMENT — SCHOOL DR.

DESCRIPTION	POINT	STATION	NORTHING	EASTING
PC	8079	577+64.17	193237.5941	1273784.9695
PT	8081	579+08.61	193347.0895	1273756.6711
PC	8082	583+77.61	193827.8457	1273875.2682
PT	8084	587+18.22	194139.8478	1274008.7528
POE	8085	590+53.30	194425.0072	1274184.7201

HORIZONTAL ALIGNMENT — MARSHALL RD.

DESCRIPTION	POINT	STATION	NORTHING	EASTING
POB	8034	344+43.03	194440.8681	1273759.6460
POE	8035	351+46.77	195135.4793	1273872.6393

HORIZONTAL ALIGNMENT — T.P. WHITE DR.

DESCRIPTION	POINT	STATION	NORTHING	EASTING
PI	8041	100+00.00	194425.5102	1274171.2393
PC	8042	102+09.78	194626.6679	1274230.7807
PT	8044	104+89.94	194865.6666	1274371.5390
PC	8045	112+66.34	195419.4023	1274915.7599
PT	8075	114+96.67	195580.3888	1275080.4708
PI	8076	122+99.94	196130.1979	1275666.0979
PI	8077	125+93.97	196329.0820	1275882.6497
POE	8078	128+01.50	196471.9872	1276033.1419

SCALE IN FEET
0 100 200 400

STATE OF ARKANSAS
REGISTERED PROFESSIONAL ENGINEER
No. 9808
JAMES L. BARR
8/20/13

SURVEY CONTROL DETAILS

DATE REVISED	DATE FILMED	DATE REVISED	DATE FILMED	FED.RD. DIST.NO.	STATE	FED.AID PROJ.NO.	SHEET NO.	TOTAL SHEETS
				6	ARK.			
				JOB NO.		061276	139	438

(2) **SURVEY CONTROL DETAILS**

CURVE NUMBER	LOCATION	P.I.	NORTHING	EASTING	Δ	D	R	T	L	E	P.C.	P.T.	Ls	e FT./FT.
1	HWY. 67	557+77.50	191284.9256	1273029.8781	35°37'08" LT	1°30'00"	3819.72'	1227.07'	2374.59'	192.26'	545+50.43	569+25.02	420'	0.043
2	REDMOND RD. RAMP 1	561+57.09	191663.4120	1273200.6556	13°16'46" LT	6°00'00"	954.53'	111.16'	221.32'	6.45'	560+45.93	562+67.25	250'	0.070
3	REDMOND RD. RAMP 4	550+96.16	190910.6971	1272455.3342	20°50'12" LT	2°00'00"	2864.79'	526.74'	1041.83'	48.02'	545+69.42	556+11.25	300'	0.040
4	REDMOND RD. RAMP 4	559+78.44	191676.7546	1272916.0476	39°01'28" LT	6°00'00"	954.93'	338.39'	650.41'	58.18'	556+40.05	562+90.46	250'	0.070
5	REDMOND RD. RAMP 4	565+93.10	192311.5348	1272826.8203	42°30'05" RT	12°30'00"	458.37'	178.25'	340.01'	33.44'	564+14.85	567+54.86	180'	0.078
6	REDMOND RD.	34+46.04	192559.5253	1272843.6041	19°41'30" RT	8°00'00"	716.20'	124.30'	246.15'	10.71'	33+21.74	35+67.89	250'	0.084

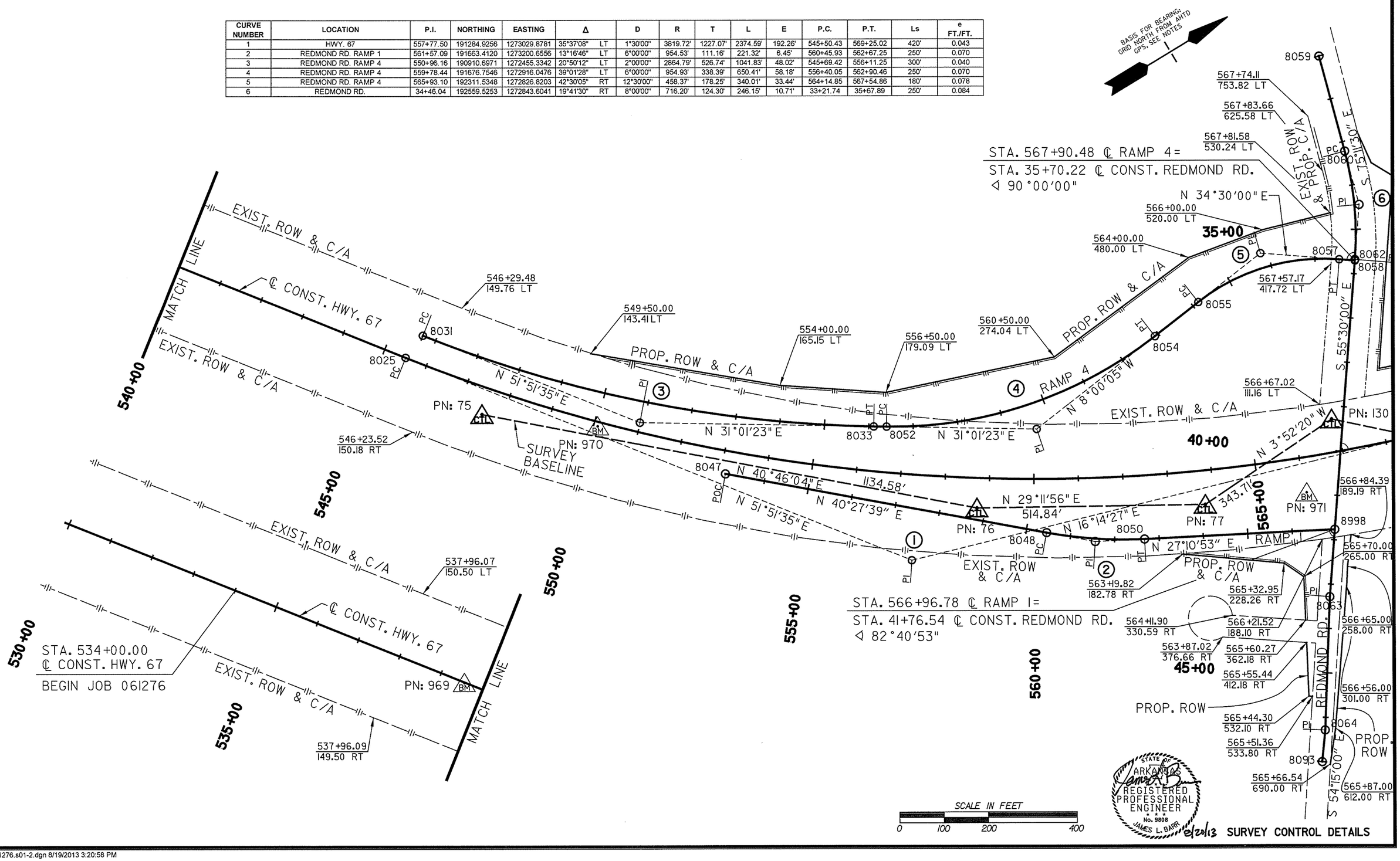

r061276.s01-2.dgn 8/19/2013 3:20:58 PM

DATE REVISED	DATE FILMED	DATE REVISED	DATE FILMED	FED.RD. DIST.NO.	STATE	FED.AID PROJ.NO.	SHEET NO.	TOTAL SHEETS
				6	ARK.			
				JOB NO.		061276	140	438

(2) SURVEY CONTROL DETAILS

CURVE NUMBER	LOCATION	P.I.	NORTHING	EASTING	Δ		D	R	T	L	E	P.C.	P.T.	Ls	e FT./FT.
6	REDMOND RD.	34+46.04	192559.5253	1272843.6041	19°41'30"	RT	8°00'00"	716.20'	124.30'	246.15'	10.71'	33+21.74	35+67.89	250'	0.084
7	HWY. 67	592+30.21	194676.2281	1274017.7631	30°14'17"	RT	2°30'00"	2291.83'	619.20'	1209.52'	82.17'	586+11.01	598+20.53	420'	0.067
8	MAIN ST. RAMP 1	571+89.49	192702.5411	1273496.4694	3°37'38"	RT	3°00'00"	1909.86'	60.47'	120.90'	0.96'	571+29.02	572+49.92	NA	NA
9	MAIN ST. RAMP 1	578+04.14	193280.6429	1273705.3738	5°13'14"	LT	3°00'00"	1909.86'	87.07'	174.02'	1.98'	577+17.07	578+91.09	250'	0.040
10	MAIN ST. RAMP 4	582+64.81	193763.7571	1273698.3201	12°33'33"	LT	3°00'00"	1909.86'	210.16'	418.64'	11.53'	580+54.65	584+73.29	300'	0.057
11	SCHOOL DR.	578+41.96	193298.8303	1273737.0008	52°43'14"	RT	36°30'00"	156.97'	77.79'	144.44'	18.22'	577+64.17	579+08.61	MATCH	EXIST.
12	SCHOOL DR.	585+49.18	193993.8396	1273918.6536	17°01'50"	RT	5°00'00"	1145.92'	171.57'	340.61'	12.77'	583+77.61	587+18.22	250'	0.061
13	MAIN ST.	202+95.02	194421.6865	1274273.7160	41°41'43"	RT	24°30'00"	233.86'	89.06'	170.18'	16.38'	202+05.96	203+76.14	MATCH	EXIST.
14	T.P. WHITE	103+52.72	194763.7246	1274271.3486	28°00'55"	RT	10°00'00"	572.96'	142.94'	280.15'	17.56'	102+09.78	104+89.93	MATCH	EXIST.

STA. 344+43.03 ℄ MARSHALL RD. =
STA. 197+80.59 ℄ CONST. MAIN ST.
◁ 82°53'51"

P.O.C. STA. 589+87.20 ℄ CONST. HWY. 67 =
STA. 200+00.00 ℄ CONST. MAIN ST.
◁ 66°29'28"

STA. 589+42.30 ℄ RAMP 4 =
STA. 197+62.86 ℄ CONST. MAIN ST.
◁ 91°32'41"

BASIS FOR BEARING: GRID NORTH FROM AHTD GPS, SEE NOTES

8059 569+01.14 690.00 LT; 569+03.22 629.99 LT; 569+17.62 620.00 LT; 569+58.44 580.00 LT; 569+02.86 580.98 LT; PC 8060; S 15°11'30" E; PI; ⑥; PROP. ROW; 8057; 8062 PT; 8058; S 55°30'00" E; EXIST. ROW; 570+60.00 155.00 LT; 570+90.66 107.77 LT; 568+20.28 165.00 LT; PROP. ROW & C/A; 570+91.37 82.78 LT; EXIST. ROW & C/A; ℄ CONST. HWY. 67; N 16°14'27" E; 567+73.33 109.35 LT; PN: 130; 8027; N 19°52'05" E 8068; 8066; N 41°47'35" E 380.52'; PN: 78; ⑧; EXIST. ROW & C/A; 571+94.19 164.42 RT; 570+99.14 192.11 RT; BM N: 971; 8998; 566+84.39 189.18 RT; 565+70.00 265.00 RT; 566+65.00 258.00 RT; 570+00; 575+00; 8063; 565+83.58 367.77 RT; 566+56.00 301.00 RT; 565+73.83 416.60 RT; REDMOND RD.; PROP. ROW; PI; 8064; 565+90.00 610.00 RT; 8093

P.O.C. STA. 566+95.12 ℄ CONST. HWY. 67 =
STA. 40+00.00 ℄ CONST. REDMOND RD.
◁ 75°11'22"

8037; S 87°51'47" E; MAIN ST.; PROP. ROW & C/A; 588+15.15 265.00 LT; 588+26.90 226.22 LT; 588+00.00 216.91 LT; 8090; 8034; PN: 133; 589+87.66 107.17 LT; 584+18.44 120.26 LT; PT; 8089; N 3°40'54" E RAMP 4; N 1°08'31" E 780.87'; N 16°14'27" E; ⑩; PC; 8087; N 16°14'27" E; N 38°04'23" W; PN: 79; 1191.77'; 8095; 8094; 8091; 8079; 8081; ⑨; ⑪; 578+90.00 144.76 RT; 578+57.00 153.00 RT; 578+30.00 165.00 RT; PROP. ROW; 577+92.40 199.18 RT; 577+21.13 445.63 RT; 580+00; 576+69.88 450.71 RT; EXIST. ROW; 577+67.12 148.23 RT; 8066; N 14°48'00" E RAMP 1; SCHOOL DRIVE; N 14°38'51" E; 8082; 583+50.53 131.75 RT; 585+00; 8028; N 71°54'48" E 312.57'; 8084 N 31°40'41" E; ⑫; 586+00.00 147.67 RT; 586+46.93 150.25 RT; T.C.E.; 587+00.00 172.00 RT; 588+42.86 187.49 RT; T.C.E.; 589+90.73 204.79 RT; 590+00; 8085; 8041; N 16°29'18" E; ⑬; PC; PI; 8039 PT; 590+37.35 332.13 RT; 8073; S 46°10'04" E; 595+00

STA. 590+53.30 ℄ SCHOOL DR. =
STA. 202+05.96 ℄ CONST. MAIN ST.
◁ 60°27'32"

STA. 100+00.00 ℄ T.P. WHITE DR. =
STA. 201+92.47 ℄ CONST. MAIN ST.
◁ 104°21'05"

8035; 590+44.83 207.96 LT; 590+29.84 202.73 LT; 590+22.29 185.00 LT; 593+05.35 320.90 LT; 594+68.83 415.61 LT; 594+48.33 297.21 LT; 594+96.95 206.17 LT; 595+94.35 111.35 LT; 593+61.16 292.07 LT; 594+13.88 185.00 LT; 591+82.93 111.15 LT; 594+46.93 122.90 LT; 595+00; PROP. ROW & C/A; EXIST. ROW; N 9°14'22" E; N 46°28'44" E; PI; ⑦; N 31°05'37" E; PN: 80; 698.25'; 8042; 8044; 8030; PT; ⑭; N 16°29'18" E; N 44°30'13" E; EXIST. ROW; 591+97.00 203.18 RT; 592+27.84 255.47 RT; 594+47.01 130.14 RT; 590+36.20 284.88 RT; 593+33.09 294.50 RT; 594+19.94 314.32 RT; 596+33.25 425.75 RT; 597+50.05 530.95 RT

STATE OF ARKANSAS
JAMES L. BARR
REGISTERED PROFESSIONAL ENGINEER
No. 9808
JAMES L. BARR
8/20/13

SCALE IN FEET
0 50 100 200

SURVEY CONTROL DETAILS

r061276.s01-3.dgn 8/19/2013 3:20:59 PM

DATE REVISED	DATE FILMED	DATE REVISED	DATE FILMED	FED.RD. DIST.NO.	STATE	FED.AID PROJ.NO.	SHEET NO.	TOTAL SHEETS
				6	ARK.			
				JOB NO.		061276	141	438

(2) **SURVEY CONTROL DETAILS**

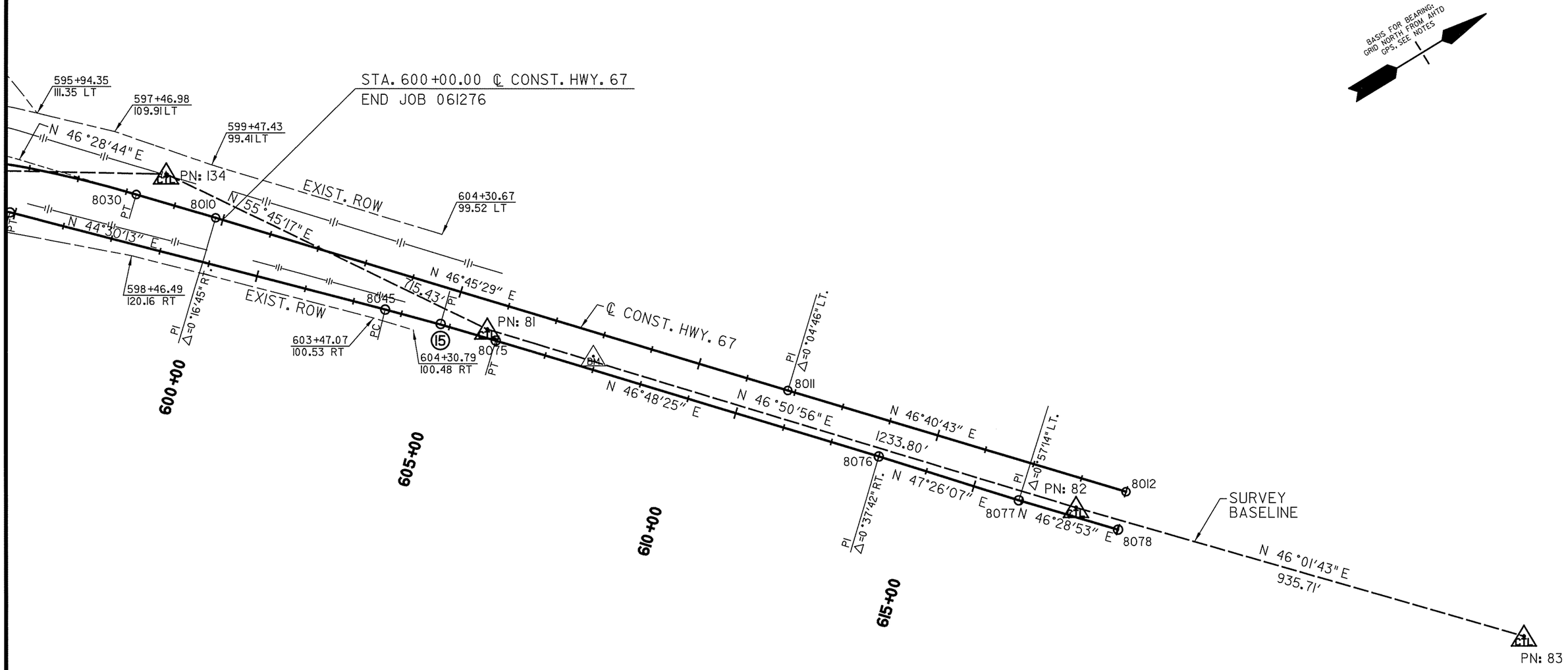

CURVE NUMBER	LOCATION	P.I.	NORTHING	EASTING	Δ	D	R	T	L	E	P.C.	P.T.	Ls	e FT./FT.
15	T.P. WHITE	113+81.52	195501.5511	1274996.4972	2°18'12" RT	1°00'00"	5729.58'	115.18'	230.33'	1.16'	112+66.34	114+96.67	MATCH	EXIST.

STATE OF ARKANSAS
James L. Barr
REGISTERED PROFESSIONAL ENGINEER
No. 9808
JAMES L. BARR
8/20/13

SCALE IN FEET
0 50 100 200

SURVEY CONTROL DETAILS

r061276.s01-4.dgn 8/19/2013 3:21:01 PM

PROPOSED GUARDRAIL LOCATION	GUARDRAIL (TYPE A)	GUARDRAIL TERMINAL (TYPE 2)	TERMINAL ANCHOR POST (TYPE A)
*STA. 533+00.00 - STA. 535+25.00 ℄ CONST. HWY. 67 - LT. OF RT. MAIN LANES	175 LIN. FT.	1 EACH	1 EACH
*STA. 534+75.00 - STA. 537+00.00 ℄ CONST. HWY. 67 - LT. & RT. OF LT. MAIN LANES	350 LIN. FT.	2 EACH	1 EACH

*SEE SIGNING SHEETS FOR ADDITIONAL INFORMATION

DATE REVISED	DATE FILMED	DATE REVISED	DATE FILMED

FED.RD. DIST.NO.	STATE	FED.AID PROJ.NO.	SHEET NO.	TOTAL SHEETS
6	ARK.			
JOB NO.		061276	142	438

(2) PLAN STA. 530+00 TO 545+00

STA. 539+63 ℄ CONST.- IN PLACE
DBL. 10' X 7' X 188' R.C. BOX CULVERT
(SPAN 22.08')
W/DROP INLET IN MEDIAN
Q50 = 807 CFS, D.A. = 1.1 SQ. MI.
RETAIN & EXTEND R.C. BOX 14' LT. & 10' RT.
USE 3:1 WINGWALLS
ADJUST TYPE TM DROP INLET TO GRADE
(4'-0" x 3'-0" x H= 3'-11¼")

℄ CONST.
CONCRETE DITCH PAVING (TYPE B)

STA.	STA.	LENGTH	SIDE	"W"	SQ. YDS.
538+70	539+43	73'	LT	8'	64.9
539+43	539+63	20'	LT	12'	26.7

℄ CONST.
CONCRETE DITCH PAVING (TYPE A)

STA.	STA.	LENGTH	SIDE	"B"	"W"	SQ. YDS.
539+63	541+50	187'	LT	6'	16'	332.4

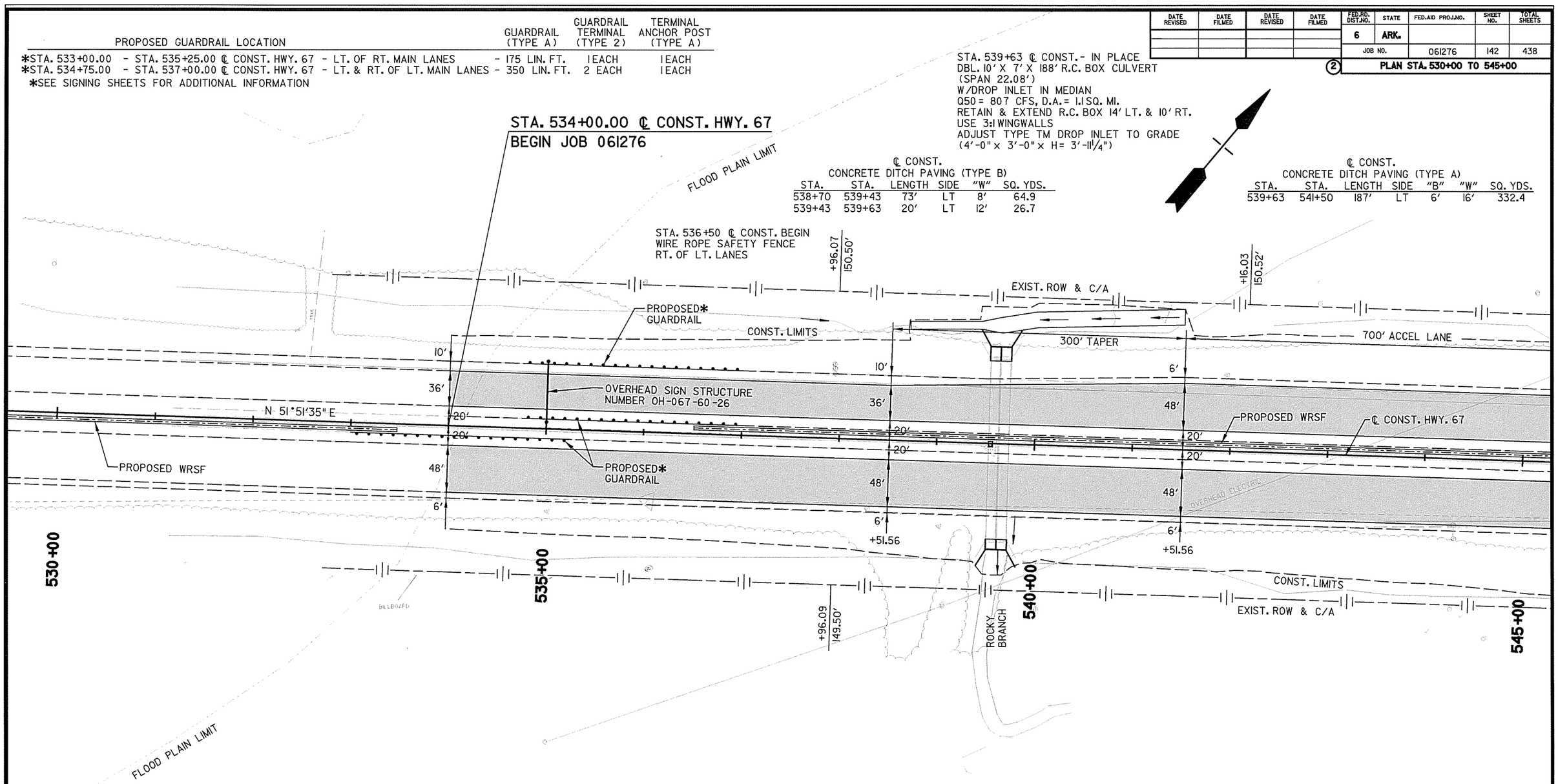

STA. 527+00 - STA. 551+65 ℄ CONST.-
IN PLACE 2465' x 4' WIDE CONCRETE
DITCH PAVING IN MEDIAN
REMOVE

STA. 527+00 - STA. 551+65 ℄ CONST.-
IN PLACE 2465 L.F. WIRE ROPE
SAFETY FENCE IN MEDIAN
REMOVE

STA. 527+00 ℄ CONST. MATCH EXISTING
WIRE ROPE SAFETY FENCE
TRANSITION FROM ℄ MEDIAN TO
LT. OF RT. LANES (300 L.F.)

STA. 533+50 ℄ CONST. END
WIRE ROPE SAFETY FENCE
LT. OF RT. LANES

STATE OF ARKANSAS
REGISTERED PROFESSIONAL ENGINEER
No. 9808
JAMES L. BARR
8/20/13

PLAN MAIN LANES
STA. 530+00 TO 545+00

r061276.plan1.dgn 8/20/2013 2:25:47 PM

DATE REVISED	DATE FILMED	DATE REVISED	DATE FILMED

FED.RD. DIST.NO.	STATE	FED.AID PROJ.NO.	SHEET NO.	TOTAL SHEETS
6	ARK.			
JOB NO.		061276	143	438

(2) **PROFILE STA. 530+00 TO 545+00**

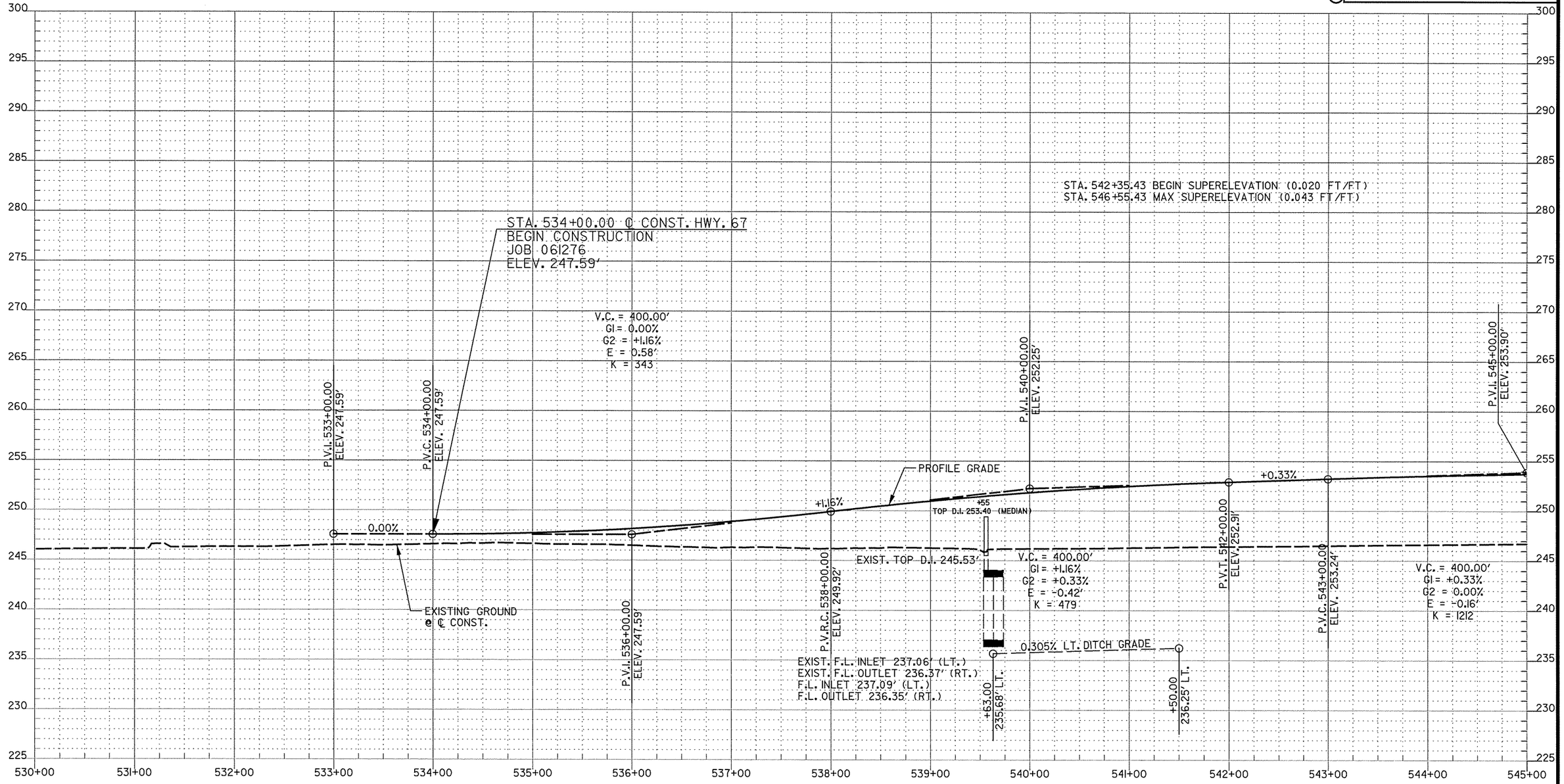

ROCKY BRANCH - STA. 539+63 ℄ CONST.
FOR THE CONSTRUCTION OF TEMPORARY WORK RAMPS OR HAUL ROADS, THE STREAM IS CLASSIFIED AS AN INTERMITTENT STREAM. THE STREAM BANK ELEVATION IS 238.0 FT. MSL. SEE SUBSECTION 110.06(C) OF THE STANDARD SPECIFICATIONS REGARDING CONSTRUCTION OF TEMPORARY FILLS WITH INTERMITTENT STREAM LIMITS.

BM 969 - SQ CUT CENTER DI
1.24' RT. ℄ CONST. HWY. 67
STA. 539+56.32
ELEV. 245.3347'

STATE OF ARKANSAS
REGISTERED PROFESSIONAL ENGINEER
No. 9808
JAMES L. BARR
8/20/13

PROFILE MAIN LANES
STA. 530+00 TO 545+00

r061276.pro1.dgn 8/19/2013 3:21:04 PM

DATE REVISED	DATE FILMED	DATE REVISED	DATE FILMED	FED.RD. DIST.NO.	STATE	FED.AID PROJ.NO.	SHEET NO.	TOTAL SHEETS
				6	ARK.			
				JOB NO.		061276	144	438

(2) **PLAN STA. 545+00 TO 560+00**

STA. 545+50.43 - STA. 551+65 ℄ CONST.- IN PLACE
615 LIN. FT. 3-STRAND CABLE BARRIER
REMOVE

STA. 545+50.43 ℄ CONST. BEGIN CONCRETE BARRIER WALL
(MEDIAN TYPE A) - SEE SPECIAL DETAILS
FOR ADDITIONAL INFORMATION.

STA. 549+95 ℄ CONST.- IN PLACE
TRI. 10′ X 6′ X 186′ R.C. BOX CULVERT
(SPAN 32.92′)
W/DROP INLET IN MEDIAN-MODIFY DROP INLET
Q50 = 1210 CFS, D.A. = 1.6 SQ. MI.
RETAIN AND EXTEND 35′ LT. & 19′ RT.
USE 3:1 WINGWALLS

℄ CONST. HWY. 67
P.I. = 557+77.50
N = 191284.9256
E = 1273029.8781
DELTA = 35°37′08" LT
DOC = 1°30′00"
T = 1227.07′
L = 2374.59′
E = 192.26′
P.C. = 545+50.43
P.T. = 569+25.02
Ls = 420′
e = 0.043 FT/FT

STA. 560+00 ℄ CONST. HWY. 67 CONSTRUCT
TYPE ST DROP INLET ALONG BARRIER WALL
3′-0" x 3′-0" x H= 7′-0"
WITH 24" x 78′ R.C. PIPE CULVERT OUTLET ON LT.
(CLASS III) (TY. 3 BEDDING) WITH F.E.S. LT.

REMOVAL & DISPOSAL OF EXIST. GUARDRAIL LOCATION			GUARDRAIL (TYPE A)	GUARDRAIL TERMINAL (TYPE 2)	TERMINAL ANCHOR POST (TYPE A)
STA. 549+18	TO STA. 555+43	℄ CONST. HWY. 67 RT. - L.M.L. - 625 LIN. FT.			2 EACH
STA. 550+93	TO STA. 555+43	℄ CONST. HWY. 67 LT. - R.M.L. - 400 LIN. FT.		1 EACH	1 EACH
STA. 552+75	TO STA. 555+00	℄ CONST. HWY. 67 LT. - L.M.L. - 175 LIN. FT.		1 EACH	1 EACH
STA. 553+15	TO STA. 563+90	℄ REDMOND RD. RAMP 1 RT. - RAMP - 1025 LIN. FT.		1 EACH	1 EACH

STA. 558+92 ℄ CONST.- IN PLACE
DROP INLET 28′ RT. WITH
18" X 67′ R.C. PIPE OUTLET
CONNECTED TO DROP INLET
42′ LT. WITH 18" X 60′ R.C.
PIPE OUTLET & HDWL. LT.
REMOVE

℄ RAMP 4
CONCRETE DITCH PAVING (TYPE B)

STA.	STA.	LENGTH	SIDE	"W"	SQ. YDS.
550+20	564+50	1430′	LT	10′	1588.9

℄ RAMP 4 PC STA. 545+69.42 =
℄ CONST. HWY. 67 STA. 545+68.04

STA. 545+60 ℄ CONST. END
WIRE ROPE SAFETY FENCE
RT. OF LT. LANES

STA. 552+99 ℄ CONST. - IN PLACE
OVERHEAD SIGN STRUCTURE
REMOVE & RELOC. TO STA. 535+00

EXIST. ROW & C/A
+29.48
149.76′
+50.00
143.41′
OVERHEAD ELECTRIC
PI 550+96.16 RAMP 4
FLOOD PLAIN LIMIT
+00.00
165.15′
+50.00
179.09′
PT 556+11.25 RAMP 4
PC 556+40.05 RAMP 4
+71.89
237.23′
CONST. LIMITS
OVERHEAD ELECTRIC
PROP. ROW & C/A
RAMP 4
EXIST. ROW & C/A
+50.00
274.04′
PROP. ROW & C/A
560+00
6′
700′ ACCEL LANE
+51.56
CRASH CUSHION
48′
20′
PROPOSED WRSF
20′
N 51°51′35" E
6′
15′
4′
+38.69
124.27′
10′
36′
11′
11′
36′
+88.84
N 31°01′23" E
℄ CONST. HWY. 67
48′
BEGIN MEDIAN BARRIER WALL STA. 545+50.43
*PROPOSED GUARDRAIL
OVERHEAD SIGN STRCT. NUMBER OH-067-60-23
GUARDRAIL
N 40°27′39" E
10′
4′
15′
+6.22
6′
RAMP 1
545+00
540′ MEDIAN TRANSITION
6′
+90.43
GUARDRAIL
N 16°14′27" E
PC 545+50.43
+23.52
150.18′
EXIST. ROW & C/A
CONST. LIMITS
550+00
555+00
EXIST. ROW & C/A
BILLBOARD
BEGIN MSE WALL
STA. 560+20.00
POC 553+10.36 RAMP 1
PI 557+77.50

STA. 551+65 ℄ CONST. END EXIST.
WIRE ROPE SAFETY FENCE

STA. 550+05 ℄ CONST. HWY. 67 CONSTRUCT
TYPE ST DROP INLET ALONG BARRIER WALL
3′-0" x 3′-0" x H= 5′-9"
WITH 24" x 6′ R.C. PIPE CULVERT
CONNECT TO DROP INLET ON RT.
(CLASS III) (TY. 3 BEDDING)

STA. 554+89 ℄ CONST. BEGIN
EXIST. CONC. BARRIER WALL

STA. 555+12 ℄ CONST.- IN PLACE
OVERHEAD SIGN STRUCTURE
REMOVE

STA. 559+93 ℄ CONST.- IN PLACE
DROP INLET 88′ RT. WITH
18" X 67′ R.C. PIPE OUTLET
HDWL. TO THE RT.
REMOVE

STA. 547+50 ℄ CONST. HWY. 67 CONSTRUCT
TYPE ST DROP INLET ALONG BARRIER WALL
3′-0" x 3′-0" x H= 5′-3"
WITH 24" x 96′ R.C. PIPE CULVERT OUTLET ON RT.
(CLASS III) (TY. 3 BEDDING) WITH F.E.S. RT.

℄ CONST.
CONCRETE DITCH PAVING (TYPE B)

STA.	STA.	LENGTH	SIDE	"W"	SQ. YDS.
547+50	547+50	28′	RT	4′	12.4
552+50	552+50	25′	RT	4′	11.1
554+50	554+50	18′	RT	4′	8.0
560+00	560+00	32′	LT	4′	14.2

STA. 552+50 ℄ CONST. HWY. 67 CONSTRUCT
TYPE ST DROP INLET ALONG BARRIER WALL
3′-0" x 3′-0" x H= 5′-3"
WITH 24" x 90′ R.C. PIPE CULVERT OUTLET ON RT.
(CLASS III) (TY. 3 BEDDING) WITH F.E.S. RT.

STA. 554+50 ℄ CONST. HWY. 67 CONSTRUCT
TYPE ST DROP INLET ALONG BARRIER WALL
3′-0" x 3′-0" x H= 5′-3"
WITH 24" x 92′ R.C. PIPE CULVERT OUTLET ON RT.
(CLASS III) (TY. 3 BEDDING) WITH F.E.S. RT.

STA. 557+94 ℄ CONST.- IN PLACE
DROP INLET 93′ RT. WITH
24" X 53′ R.C. PIPE OUTLET
HDWL. TO THE RT.
REMOVE

LOCATION	GUARDRAIL (TYPE A)	GUARDRAIL TERMINAL (TYPE 2)	TERMINAL ANCHOR POST (TYPE I)
STA. 559+75.00 TO STA. 564+00.00 ℄ RAMP 1 RT.	375 LIN. FT.	1 EACH	1 EACH
*STA. 549+00.00 TO STA. 551+25.00 ℄ CONST. HWY. 67 - RT. - R.M.L.	175 LIN. FT.	1 EACH	1 EACH

*SEE SIGNING SHEETS FOR ADDITIONAL INFORMATION

STATE OF ARKANSAS
REGISTERED PROFESSIONAL ENGINEER
No. 9808
JAMES L. BARR

PLAN MAIN LANES
STA. 545+00 TO 560+00

r061276.plan2.dgn 8/20/2013 11:55:22 AM

DATE REVISED	DATE FILMED	DATE REVISED	DATE FILMED	FED.RD. DIST.NO.	STATE	FED.AID PROJ.NO.	SHEET NO.	TOTAL SHEETS
				6	ARK.			
				JOB NO.		061276	145	438

(2) **PROFILE STA. 545+00 TO 560+00**

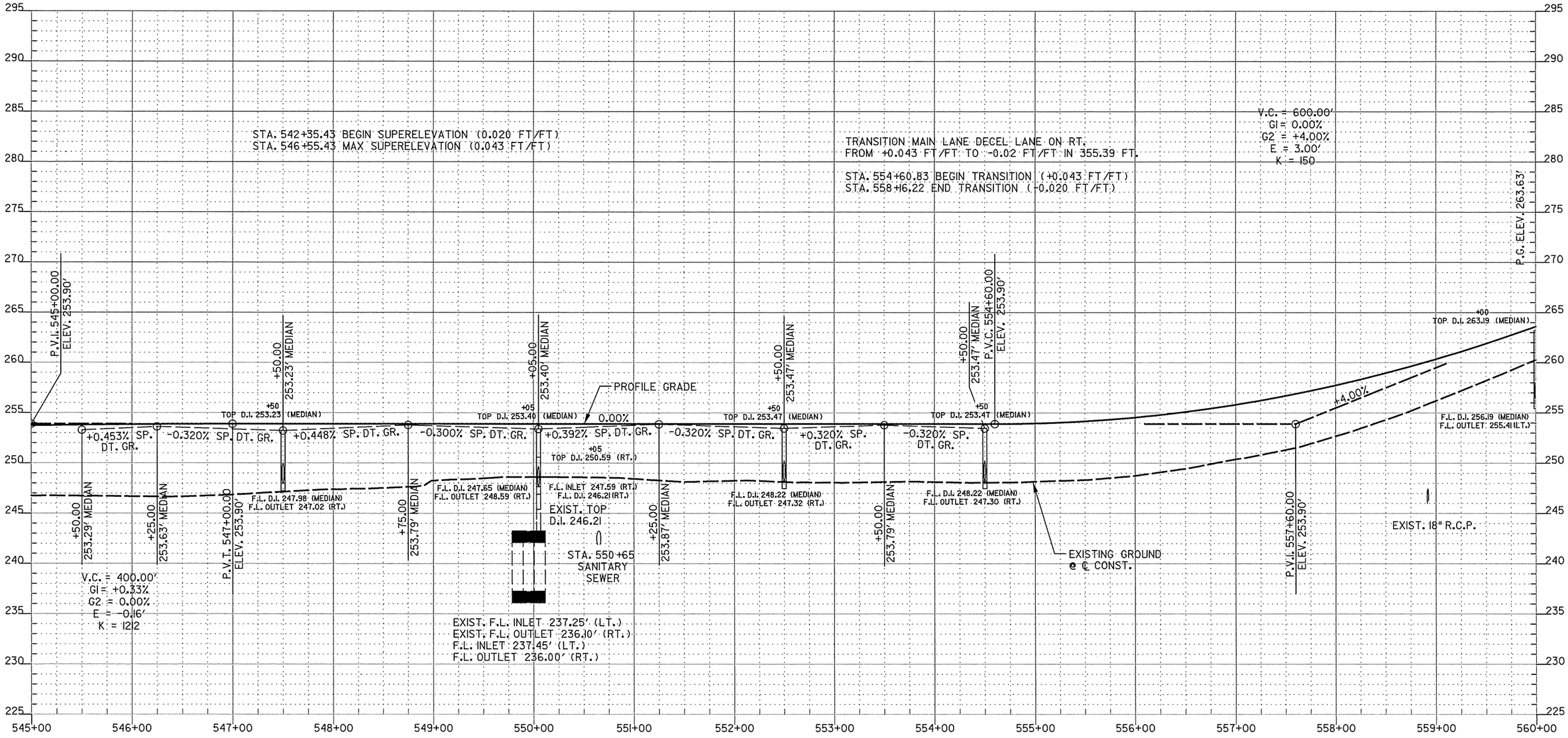

UNNAMED TRIBUTARY - STA 549+95 ℄ CONST.
FOR THE CONSTRUCTION OF TEMPORARY WORK RAMPS OR HAUL ROADS, THE STREAM IS CLASSIFIED AS AN INTERMITTENT STREAM. THE STREAM BANK ELEVATION IS 238.0 FT. MSL. SEE SUBSECTION 110.06(C) OF THE STANDARD SPECIFICATIONS REGARDING CONSTRUCTION OF TEMPORARY FILLS WITH INTERMITTENT STREAM LIMITS.

BM 970 - SQ CUT CENTER DI
9.90' RT. ℄ CONST. HWY. 67
STA. 550+09.32
ELEV. 244.8936'

STATE OF ARKANSAS
REGISTERED PROFESSIONAL ENGINEER
No. 9808
JAMES L. BARR
8/20/13

PROFILE MAIN LANES STA. 545+00 TO 560+00

r061276.pro2.dgn 8/19/2013 3:21:10 PM

DATE REVISED	DATE FILMED	DATE REVISED	DATE FILMED	FED.RD. DIST.NO.	STATE	FED.AID PROJ.NO.	SHEET NO.	TOTAL SHEETS
				6	ARK.			
				JOB NO.		061276	146	438

(2) **PLAN STA. 560+00 TO 575+00**

STA. 563+50 ℄ RAMP 4 - CONSTRUCT
24" X 88' R.C. PIPE CULVERT
(CLASS III) (TYPE 3 BEDDING) WITH
F.E.S. LT. & RT.
Q50 = 17.3 CFS, D.A. = 5.2 ACRES

STA. 567+00 ℄ RAMP 4 - CONSTRUCT
24" X 86' R.C. PIPE CULVERT
(CLASS III) (TYPE 3 BEDDING) WITH
F.E.S. LT. & RT.
Q50 = 19.4 CFS, D.A. = 5.2 ACRES

+00.00
480.00'

PI 565+93.10
RAMP 4

+00.00
520.00'

+81.58
530.24'

PROP. ROW & C/A

35+00

GRADE TO DRAIN

+58.44
580.00'

PI 34+46.04
REDMOND RD.

STA. 567+90.48 ℄ RAMP 4 =
STA. 35+70.22 ℄ CONST. REDMOND RD.
◁ 90°00'00"

PROP. ROW

R=125'

20'

R=40'

R=75'

N 8°00'05" W

N 34°30'00" E

PI 562+90.46
RAMP 4

+50.00
274.04'

PROP. ROW & C/A

560+00

6'

15'

4'

PI 565+84.86
RAMP 4

℄ CONST. HWY. 67
P.I. = 557+77.50
N = 191284.9256
E = 1273029.8781
DELTA = 35°37'08" LT
DOC = 1°30'00"
T = 1227.07'
L = 2374.59'
E = 192.26'
P.C. = 545+50.43
P.T. = 569+25.02
Ls = 420'
e = 0.043 FT/FT

STA. 569+50 ℄ CONST. HWY. 67 CONSTRUCT
TYPE ST DROP INLET ALONG BARRIER WALL
3'-0" x 3'-0" x H= 5'-3 7/8"
WITH 24" x 98' R.C. PIPE CULVERT CONNECT TO
D.I. @ STA. 570+50 (CLASS III) (TY. 3 BEDDING)

MUNICIPAL DR.

PT 35+67.89
REDMOND RD.

+85.65
BEGIN PROP. C/A

℄ CONST.
CONCRETE DITCH PAVING (TYPE B)

STA.	STA.	LENGTH	SIDE	"W"	SQ. YDS.
565+50	565+50	54'	LT	4'	24.0
570+50	570+53	49'	RT	4'	21.8
570+60	580+00	940'	LT	4'	417.8

RAMP 4

CONST. LIMITS

N 8°00'05" W

STA. 565+50 ℄ CONST. HWY. 67 CONSTRUCT
TYPE ST DROP INLET ALONG BARRIER WALL
3'-0" x 3'-0" x H= 7'-0"
WITH 24" x 78' R.C. PIPE CULVERT OUTLET ON LT.
(CLASS III) (TY. 3 BEDDING) WITH F.E.S. LT.

EXIST. C/A

EXIST. ROW

REDMOND RD.

RAILROAD

PROP. ROW & C/A

CONST. LIMITS

S 55°30'00" E

STA. 566+76 ℄ CONST., 93' LT. - IN PLACE
18" X 104' R.C. PIPE OUTLET
& HDWL. LT. & RT.
REMOVE

PAVED PARKING

STA. 566+19 TO STA. 569+61 ℄ CONST. - IN PLACE
347'-2 3/4" X 28'-0" BRIDGE CONSISTING
OF 60',3-75' & 60' COMPOSITE I-BEAM SPANS.
REMOVE AS EXISTING BRIDGE
STRUCTURE = 1.00 LUMP SUM

P.O.C. STA. 566+95.12 ℄ CONST. HWY. 67 =
STA. 40+00.00 ℄ CONST. REDMOND RD.
◁ 75°11'22"

GOODSELL TRUCK ACCESSORIES

STA. 565+83 ℄ CONST. HWY. 67 CONSTRUCT
TYPE N-2 DROP INLET ALONG CURB
WITH 12" x 80' ZINC COATED C.S. PIPE ON LT.
(TY. 2 BEDDING) WITH TYPE A SPILLWAY

PI 559+78.44
RAMP 4

EXIST. ROW & C/A

OVERHEAD ELECTRIC

CONST. LIMITS

+20.28
165.00'

BEGIN EXIST. C/A

+60.00
155.00'

PROP. ROW & C/A

CONST. LIMITS

+90.66
107.77'

+91.37
82.78'

EXIST. ROW & C/A

OVERHEAD ELECTRIC

BEGIN EXIST. C/A

+22.04

MSE WALL

300' TAPER

BARRIER WALL

10'

STA. 566+14.68 ℄ CONST. BRIDGE END
280'-0" CONTINUOUS COMP. W-BEAM UNIT
BRIDGE NO. 7282A
56'-0" CLEAR ROADWAY WIDTH
282'-2 3/16" BRIDGE LENGTH
STA. 568+99.16 ℄ CONST. BRIDGE END

10'

36'

BEGIN MSE WALL
STA. 560+20.00

℄ CONST. HWY. 67

+00

+50

50' TRANS.

40+00

PT 569+25.02

BEGIN MSE WALL
STA. 570+60.00

℄ CONST. HWY. 67

36'

11'

11'-9"

11'-9"

48'

N 16°14'27" E

N 19°52'05" E

+89.62

RAMP 1

4'

+82.86

200' TAPER

300' TAPER

6'

+89.62

OVERHEAD SIGN STRUCTURE NO. OH-067-60-29

MSE WALL

N 40°21'59" E

N 21°10'53" E

15'

6'

16' CONST. LIMITS

EXIST. ROW & C/A

PI 561+57.09
RAMP 1

+82.86

4'

24'

END MSE WALL STA. 565+89.83

R=75'

1120' DECEL LANE

50' TRANS.

+50

+00

BEGIN EXIST. C/A

CONST. LIMITS

PC 571+29.02
RAMP 1

PI 571+89.49
RAMP 1

PT 572+49.92
RAMP 1

RAMP 1

+09.62

EXIST. ROW & C/A

6'

20'

PT 562+67.25
RAMP 1

+19.82
182.78'

PROP. ROW & C/A

MSE WALL

END EXIST. C/A

EXIST. ROW

STA. 566+00.49 ℄ CONST. BRIDGE END
280'-0" CONTINUOUS COMP. W-BEAM UNIT
BRIDGE 7282B
64'-0" CLEAR ROADWAY WIDTH
282'-2 3/16" BRIDGE LENGTH
STA. 568+80.29 ℄ CONST. BRIDGE END

+32.95
228.26'

+11.90
330.59'

STA. 562+86 ℄ CONST. - IN PLACE
DROP INLET 36' RT. WITH
18" X 54' R.C. PIPE OUTLET
& HDWL. TO THE RT.
REMOVE

565+00

570+00

575+00

R=125'

+91.45
255.40'

+70.00
265.00'

EXIST. ROW

36' F-F

+60.27
362.18'

END PROP. C/A

+87.02
376.66'

+94.19
164.42'

+99.14
192.11'

STA. 570+50 ℄ CONST. HWY. 67 CONSTRUCT
TYPE ST DROP INLET ALONG BARRIER WALL
3'-0" x 3'-0" x H= 5'-3"
WITH 24" x 84' R.C. PIPE CULVERT OUTLET ON RT.
(CLASS III) (TY. 3 BEDDING) WITH F.E.S. RT.

STA. 566+10 TO STA. 569+50 ℄ CONST. - IN PLACE
347'-2 3/4" X 28'-0" BRIDGE CONSISTING
OF 60',3-75' & 60' COMPOSITE I-BEAM SPANS.
REMOVE AS EXISTING BRIDGE
STRUCTURE = 1.00 LUMP SUM

℄ RAMP 1
CONCRETE DITCH PAVING (TYPE B)

STA.	STA.	LENGTH	SIDE	"W"	SQ. YDS.
560+10	566+27	617'	LT	4'	274.2
560+10	566+27	617'	LT	8'	548.4
566+27	566+69	45'	LT	10'	50.0

REMOVAL & DISPOSAL OF EXIST. GUARDRAIL LOCATION	GUARDRAIL (TYPE A)	TERMINAL ANCHOR POST (TYPE A)
STA. 563+78 TO STA. 565+78 ℄ CONST. HWY. 67 RT. - R.M.L.	200 LIN. FT.	1 EACH
STA. 569+93 TO STA. 571+93 ℄ CONST. HWY. 67 LT. - R.M.L.	200 LIN. FT.	1 EACH

+55.44
412.18

45+00

PROP. ROW

REDMOND RD.

S 57°45'00" E

CONST. LIMITS

PI 43+28.36
REDMOND RD.
DELTA = 2°15' LT.

STA. 566+96.78 ℄ RAMP 1 =
STA. 41+76.54 ℄ CONST. REDMOND RD.
◁ 82°40'53"

STA. 571+11 ℄ CONST. - IN PLACE
DROP INLET 45' RT. WITH
18" X 82' R.C. PIPE OUTLET
& HDWL. TO THE RT.
REMOVE

LOCATION	GUARDRAIL (TYPE A)	GUARDRAIL TERMINAL (TYPE 2)	THRIE BEAM GUARDRAIL TERMINAL
STA. 562+15.05 TO STA. 565+83.80 ℄ CONST. HWY. 67 RT. - R.M.L. -	300 LIN. FT.	1 EACH	1 EACH

STATE OF ARKANSAS
REGISTERED PROFESSIONAL ENGINEER
No. 9808
JAMES L. BARR
8/22/13

PLAN MAIN LANES
STA. 560+00 TO 575+00

r061276.plan3.dgn 8/19/2013 3:21:13 PM

DATE REVISED	DATE FILMED	DATE REVISED	DATE FILMED

FED.RD. DIST.NO.	STATE	FED.AID PROJ.NO.	SHEET NO.	TOTAL SHEETS
6	ARK.			
JOB NO.		061276	147	438

(2) **PROFILE STA. 560+00 TO 575+00**

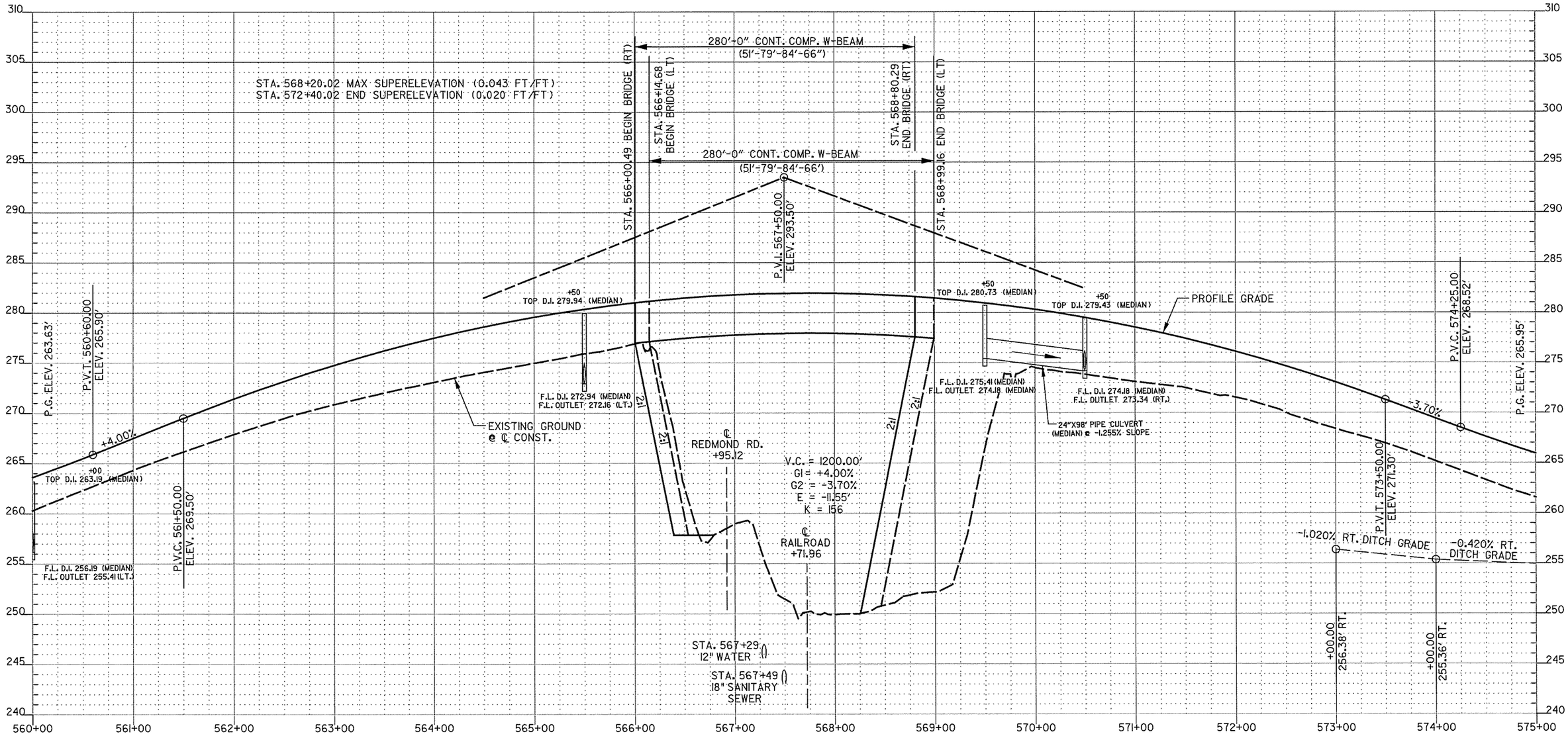

BM 971 - SQ CUT CENTER DI
78.51' RT. ℄ CONST. HWY. 67
STA. 566+04.40
ELEV. 244.3076'

STATE OF ARKANSAS
REGISTERED PROFESSIONAL ENGINEER
No. 9808
JAMES L. BARR
8/20/13

PROFILE MAIN LANES
STA. 560+00 TO 575+00

r061276.pro3.dgn 8/19/2013 3:21:16 PM

DATE REVISED	DATE FILMED	DATE REVISED	DATE FILMED	FED.RD. DIST.NO.	STATE	FED.AID PROJ.NO.	SHEET NO.	TOTAL SHEETS
				6	ARK.			
				JOB NO.		061276	148	438

② PLAN STA. 575+00 TO 590+00

STA. 576+06 ℄ CONST.- IN PLACE
50"X 137' R.C. PIPE INLET & HDWL. 96' LT.
RETAIN

℄ RAMP 4
CONCRETE DITCH PAVING (TYPE B)

STA.	STA.	LENGTH	SIDE	"W"	SQ. YDS.
581+97	588+16	619'	LT	4'	275.1
588+16	588+16	6'	LT	6'	4.0

STA. 585+12 ℄ CONST.- IN PLACE
DROP INLET 4' LT. WITH
24"X 74' R.C. PIPE OUTLET
& HDWL. TO THE LT.
REMOVE

STA. 589+16 TO STA. 590+77 ℄ CONST.- IN PLACE
162'-4½"X 28'-0" BRIDGE CONSISTING
OF 45' I-BEAM, 70' COMPOSITE I-BEAM,
& 45' I-BEAM SPANS. REMOVE AS EXISTING
BRIDGE STRUCTURE = 1.00 LUMP SUM

STA. 589+00 TO STA. 590+58 ℄ CONST.- IN PLACE
162'-4½"X 28'-0" BRIDGE CONSISTING
OF 45' I-BEAM, 70' COMPOSITE I-BEAM,
& 45' I-BEAM SPANS. REMOVE AS EXISTING
BRIDGE STRUCTURE = 1.00 LUMP SUM

STA. 344+43.03 ℄ MARSHALL RD.=
STA. 197+80.59 ℄ CONST. MAIN ST.
◁ 82°53'51"

STA. 579+08 ℄ CONST. - IN PLACE
42"X 182' R.C. PIPE CULVERT WITH HDWL. ON LT.
REMOVE HDWL. LT. AND EXTEND R.C. PIPE
50' LT. (CLASS III) (TY. 3 BEDDING)
OUTLET THROUGH MSE WALL ON LT.
Q50 = 61.4 CFS D.A.= 12.5 ACRES
42" R.C. PIPE = 50 LIN. FT.

CITY PARK

STA. 584+00 ℄ RAMP 4 CONSTRUCT
TYPE ST DROP INLET ON RT. 3'-0"X 3'-0"X H= 11'-3"
WITH 24"X 36' R.C. PIPE CULVERT OUTLET
THROUGH MSE WALL ON LT. (CLASS III) (TY. 3 BEDDING)

STA. 585+50 ℄ RAMP 4 CONSTRUCT
TYPE E JUNCT. BOX ON RT. 4'-0"X 3'-0"X H= 12'-11"
WITH 36"X 90' R.C. PIPE CULVERT OUTLET THROUGH
MSE WALL ON LT. (CLASS IV) (TY. 3 BEDDING)

STA. 588+54.76 ℄ CONST. BRIDGE END
237'-0" CONTINUOUS COMP. W-BEAM UNIT
BRIDGE NO. 7283A
64'-0" CLEAR ROADWAY WIDTH
239'-4 7/16" BRIDGE LENGTH
STA. 590+90.66 ℄ CONST. BRIDGE END

STA. 588+79.34 ℄ CONST. BRIDGE END
238'-0" CONTINUOUS COMP. W-BEAM UNIT
BRIDGE NO. 7283B
56'-0" CLEAR ROADWAY WIDTH
240'-4 7/16" BRIDGE LENGTH
STA. 591+22.88 ℄ CONST. BRIDGE END

STA. 589+42.30 ℄ RAMP 4 =
STA. 197+62.86 ℄ CONST. MAIN ST.
◁ 91°32'41"

P.O.C. STA. 589+87.20 ℄ CONST. HWY. 67 =
STA. 200+00.00 ℄ CONST. MAIN ST.
◁ 66°29'28"

STA. 588+59.54 ℄ RAMP 4 - IN PLACE
18"X 125' R.C. PIPE CULVERT WITH HDWL. ON LT.
REMOVE HDWL. LT. AND EXTEND R.C. PIPE
42' LT. (CLASS III) (TY. 3 BEDDING)
WITH F.E.S. LT.
Q50 = 10.2 CFS D.A.= 1.5 ACRES
18" R.C. PIPE = 42 LIN. FT.
18" F.E.S. = 1 EACH

STA. 588+80 ℄ RAMP 4 CONSTRUCT
TYPE E DROP INLET ON RT. 6'-0"X 3'-0"X H= 4'-4 11/16"
WITH 36"X 332' R.C. PIPE CULVERT TO DROP INLET ON RT.
(CLASS IV) (TY. 3 BEDDING)

STA. 583+87 ℄ RAMP 4- IN PLACE
12"X 73' PLASTIC PIPE
SIDE DRAIN OUTLET 34' LT.
RETAIN

STA. 584+86 ℄ RAMP 4- IN PLACE
32"X 61' R.C. CROSS DRAIN
WITH HDWL. LT. & RT.
REMOVE

END MSE WALL
STA. 580+00.00

BEGIN MSE WALL
STA. 581+95.00

MSE WALL

END MSE WALL
STA. 587+80.07

END CONC.
BARRIER WALL
STA. 587+81.46

END CONC.
BARRIER WALL
STA. 588+41.35

BEGIN MSE & CONC.
BARRIER WALL
STA. 576+50.00

BEGIN RETAINING WALL & CONC.
BARRIER WALL STA. 578+08.92

BEGIN CONC.
BARRIER WALL
STA. 585+04.25

BEGIN CONC.
BARRIER WALL
STA. 584+98.73

END MSE WALL
STA. 588+13.32

END
EXIST. C/A
MSE WALL

BEGIN
EXIST. C/A

END CONC.
BARRIER WALL
STA. 584+92.13

END
EXIST. C/A

END RETAINING WALL & CONC.
BARRIER WALL STA. 579+51.02

200' CONCRETE ISLAND

224.65' TRANS.

GRADE TO DRAIN

GRADE TO DRAIN

GRADE TO DRAIN

GRADE TO T.C.E.

GRADE TO DRAIN

CONST. LIMITS

EXIST. ROW & C/A

EXIST. ROW

PROP. ROW & C/A

300' TAPER

700' ACCEL LANE

RAMP 1

RAMP 4

SCHOOL DR.

W. MAIN ST. N.

SCHOOL DRIVE

CURB & GUTTER

CRASH CUSHION

BARRIER WALL

PC 580+54.65 RAMP 4

PT 584+73.29 RAMP 4

PC 577+47.07 RAMP 1

PC 577+64.17 SCHOOL DR.

PT 578+04.14 RAMP 1

PT 578+91.09 RAMP 1

PC 578+41.96 SCHOOL DR.

PT 579+81.88 SCHOOL DR.

PI 581+51.76 RAMP 1

PI 582+64.81 RAMP 4

PC 586+11.01

PI 585+49.18 SCHOOL DR.

PT 587+81.32 SCHOOL DR.

PC 583+77.61 SCHOOL DR.

PC 202+05.96

PT 203+76.14

N 16°14'27" E

N 3°40'54" E

N 19°52'05" E

N 14°38'51" E

N 31°40'41" E

S 87°51'47" E

R=100'

R=50'

R=75'

R=85'

+22.04

+09.62

+35.25

+09.38

+52.96

+18.44 120.26'

+15.15 265.00'

+26.90 226.22'

+00.00 216.91'

+50 +00 50' TRANS.

+92.40 199.18'

+57.00 153.00'

30.00 165.00'

+90.00 144.76'

+50.53 131.75'

+00.00 147.67'

+46.93 150.25'

+00.00 172.00'

+45.54 177.85'

+42.87 170.59'

+42.86 187.49'

+90.73 204.79'

+37.35 332.13'

575+00

580+00

585+00

590+00

STA. 577+42 ℄ CONST.- IN PLACE
18"X 143' R.C. PIPE
SIDE DRAIN OUTLET & HDWL. 138' RT.
RETAIN

STA. 577+64.17 ℄ SCHOOL DR.
BEGIN CONSTRUCTION

STA. 579+50 ℄ RAMP 1 CONSTRUCT
TYPE ST DROP INLET ON LEFT 3'-0"X 3'-0"X H= 4'-3"
WITH 24"X 38' R.C. PIPE CULVERT CONNECT TO
EXIST. D.I. ⓔ STA. 579+90 (CLASS IV) (TY. 3 BEDDING)

STA. 579+90 ℄ RAMP 1 - IN PLACE
ADJUST EXIST. DROP INLET ON LEFT TO GRADE
AND INSTALL HEAVY DUTY RING AND COVER
RETAIN EXIST. 42"X 74' R.C. PIPE CULVERT
AND CONNECT TO D.I. ⓔ STA. 578+47 SCHOOL DR.

STA. 585+50 ℄ CONST. HWY. 67 CONSTRUCT
TYPE ST DROP INLET ALONG BARRIER WALL
3'-0"X 3'-0"X H= 6'-0"
WITH 24"X 96' R.C. PIPE CULVERT CONNECT TO
D.I. ⓔ STA. 584+50 (CLASS III) (TY. 3 BEDDING)

STA. 584+50 ℄ CONST. HWY. 67 CONSTRUCT
TYPE ST DROP INLET ALONG BARRIER WALL
3'-0"X 3'-0"X H= 5'-6"
WITH 24"X 80' R.C. PIPE CULVERT CONNECT TO
D.I. ON LT. (CLASS III) (TY. 3 BEDDING)

STA. 588+00 ℄ CONST. HWY. 67 CONSTRUCT
TYPE ST DROP INLET ALONG BARRIER WALL
3'-0"X 3'-0"X H= 5'-3"
WITH 24"X 86' R.C. PIPE CULVERT OUTLET ON LT.
(CLASS III) (TY. 3 BEDDING) WITH F.E.S. LT.

STA. 590+53.30 ℄ SCHOOL DR.=
STA. 202+05.96 ℄ CONST. MAIN ST.
◁ 60°27'32"

STA. 577+52.95 ℄ RAMP 1 CONSTRUCT
TYPE RM DROP INLET ON RIGHT 4'-0"X 4'-0"X H= 7'-5½"
WITH 36"X 204' R.C. PIPE CULVERT OUTLET THROUGH
MSE WALL ON LT. (CLASS V) (TY. 3 BEDDING) TO BE JACKED

℄ CONST.
CONCRETE DITCH PAVING (TYPE B)

STA.	STA.	LENGTH	SIDE	"W"	SQ. YDS.
584+92	588+21	326'	RT	4'	144.9
588+00	588+00	50'	LT	4'	22.2

℄ SCHOOL DR.
CONCRETE DITCH PAVING (TYPE B)

STA.	STA.	LENGTH	SIDE	"W"	SQ. YDS.
581+53	588+08	655'	LT	8'	582.2
588+08	588+70	62'	LT	6'	41.3

REMOVAL & DISPOSAL OF EXIST. GUARDRAIL LOCATION	GUARDRAIL (TYPE A)	TERMINAL ANCHOR POST (TYPE A)
STA. 586+93 TO STA. 588+93 ℄ CONST. HWY. 67 RT. - R.M.L.	200 LIN. FT.	1 EACH

TO BE REMOVED

℄ CONST. HWY. 67
P.I. = 592+30.21
N = 194676.2281
E = 1274017.7631
DELTA = 30°14'17" RT
DOC = 2°30'00"
T = 619.20'
L = 1209.52'
E = 82.17'
PC = 586+11.01
PT = 598+20.53
Ls = 420'
e = 0.067 FT/FT

STATE OF ARKANSAS
REGISTERED PROFESSIONAL ENGINEER
No. 9808
JAMES L. BARR
6/20/13

PLAN MAIN LANES
STA. 575+00 TO 590+00

r061276.plan4.dgn 8/19/2013 3:21:20 PM

DATE REVISED	DATE FILMED	DATE REVISED	DATE FILMED	FED.RD. DIST.NO.	STATE	FED.AID PROJ.NO.	SHEET NO.	TOTAL SHEETS
				6	ARK.			
				JOB NO.		061276	149	438
				(2)	PLAN STA. 575+00 TO 590+00			

STA. 578+50.00 ℄ SCHOOL DR. - IN PLACE
18" x 156' C.M. PIPE CULVERT ON RT.
REMOVE 18' AND EXTEND C.M. PIPE 6' RT.
AND CONNECT TO DROP INLET
Q10 = 0.65 CFS D.A.= 0.30 ACRES
18" C.M. PIPE = 8 LIN. FT.

STA. 578+56.00 ℄ SCHOOL DR. CONSTRUCT
TYPE RM DROP INLET ON RT. 4'-0" x 4'-0" x H= 7'-4 1/4"
WITH 36" x 110' R.C. PIPE CULVERT TO DROP INLET ON LT.
(CLASS III) (TY. 3 BEDDING)

STA. 579+75.00 ℄ SCHOOL DR. CONSTRUCT
DROP INLET ON RT. H= 7'-4 3/4"
WITH 36" x 108' PIPE CULVERT TO DROP INLET ON RT.
TYPE MO DROP INLET= 4' DIA.
TYPE C DROP INLET= 4'-0" x 4'-0"
36" SLPPMCCS PIPE (TY. 2 BEDDING)= 108 LIN. FT.
36" R.C. PIPE (CLASS III) (TY. 3 BEDDING)= 108 LIN. FT.

STA. 580+47.00 ℄ SCHOOL DR. CONSTRUCT
TYPE RM DROP INLET ON RT. 8'-0" x 5'-0" x H= 5'-9"
WITH 36" x 68' R.C. PIPE CULVERT TO DROP INLET ON RT.
(CLASS III) (TY. 3 BEDDING)

STA. 581+58.00 ℄ SCHOOL DR. CONSTRUCT
TYPE ST DROP INLET ON LT. 3'-0" x 3'-0" x H= 5'-6"
WITH 24" x 28' R.C. PIPE CULVERT
24" R.C. PIPE (CLASS III) (TY. 3 BEDDING)= 28 LIN. FT.

STA. 581+80.00 ℄ SCHOOL DR. CONSTRUCT
DROP INLET ON RT. H= 6'-9 1/4"
WITH 4' EXTENSION AND 48" x 126' R.C. PIPE CULVERT TO
DROP INLET ON RT.
TYPE MO DROP INLET= 7'-6" DIA.
TYPE C DROP INLET= 4'-6" x 7'-6"
48" SLPPMCCS PIPE (TY. 2 BEDDING)= 126 LIN. FT.
48" R.C. PIPE (CLASS III) (TY. 3 BEDDING)= 126 LIN. FT.

STA. 582+70.00 ℄ SCHOOL DR. CONSTRUCT
DROP INLET ON RT. H= 6'-9 1/4"
WITH 4' EXTENSION AND 48" x 86' PIPE CULVERT TO
DROP INLET ON RT.
TYPE MO DROP INLET= 7'-6" DIA.
TYPE C DROP INLET= 4'-0" x 7'-6"
48" SLPPMCCS PIPE (TY. 2 BEDDING)= 86 LIN. FT.
48" R.C. PIPE (CLASS III) (TY. 3 BEDDING)= 86 LIN. FT.

STA. 584+75.00 ℄ SCHOOL DR. CONSTRUCT
DROP INLET ON RT. H= 6'-9 1/4"
WITH 8' EXTENSION AND 48" x 200' PIPE CULVERT TO
DROP INLET ON RT.
TYPE MO DROP INLET= 7'-6" DIA.
TYPE C DROP INLET= 4'-0" x 7'-6"
48" SLPPMCCS PIPE (TY. 2 BEDDING)= 200 LIN. FT.
48" R.C. PIPE (CLASS III) (TY. 3 BEDDING)= 200 LIN. FT.

STA. 585+00.00 ℄ SCHOOL DR. CONSTRUCT
TYPE ST DROP INLET ON LT. 3'-0" x 3'-0" x H= 6'-0"
WITH 24" x 52' R.C. PIPE CULVERT TO DROP INLET ON RT.
24" R.C. PIPE (CLASS III) (TY. 3 BEDDING)= 52 LIN. FT.

STA. 587+30.00 ℄ SCHOOL DR. CONSTRUCT
DROP INLET ON RT. H= 6'-9 13/16"
WITH 4' EXTENSION AND 48" x 248' PIPE CULVERT TO
DROP INLET ON RT.
TYPE MO DROP INLET= 7'-6" DIA.
TYPE C DROP INLET= 4'-0" x 7'-6"
48" SLPPMCCS PIPE (TY. 2 BEDDING)= 248 LIN. FT.
48" R.C. PIPE (CLASS III) (TY. 3 BEDDING)= 248 LIN. FT.

STA. 587+30.00 ℄ SCHOOL DR. CONSTRUCT
24" x 6' PIPE CULVERT
CONNECT EXIST. DROP INLET TO DROP INLET @ STA. 587+30 ON RT.
24" SLPPMCCS PIPE (TY. 2 BEDDING)= 6 LIN. FT.
24" R.C. PIPE (CLASS III) (TY. 3 BEDDING)= 6 LIN. FT.

STA. 589+68.00 ℄ SCHOOL DR. CONSTRUCT
DROP INLET ON RT. H= 5'-9 1/4"
WITH 42" x 234' PIPE CULVERT TO DROP INLET ON RT.
TYPE MO DROP INLET= 7'-6" DIA.
TYPE C DROP INLET= 4'-0" x 7'-6"
42" SLPPMCCS PIPE (TY. 2 BEDDING)= 234 LIN. FT.
42" R.C. PIPE (CLASS III) (TY. 3 BEDDING)= 234 LIN. FT.

STA. 589+95.00 ℄ SCHOOL DR. CONSTRUCT
TYPE E JUNCTION BOX ON RT. 5'-6" x 3'-0" x H= 5'-0"
WITH 36" x 30' PIPE CULVERT TO DROP INLET ON RT.
36" SLPPMCCS PIPE (TY. 2 BEDDING)= 30 LIN. FT.
36" R.C. PIPE (CLASS III) (TY. 3 BEDDING)= 30 LIN. FT.

STA. 590+02.82 ℄ SCHOOL DR. - IN PLACE
24" x 151' PIPE CULVERT WITH HDWL. ON RT.
REMOVE HDWL. RT. AND EXTEND R.C. PIPE
8' RT. (CLASS III) (TY. 3 BEDDING)
AND CONNECT TO DROP INLET
Q50 = 25.4 CFS D.A.= 4.7 ACRES
24" R.C. PIPE = 8 LIN. FT.

STA. 590+17.26 ℄ SCHOOL DR. CONSTRUCT
36" x 30' PIPE CULVERT TO DROP INLET ON RT.
36" SLPPMCCS PIPE (TY. 2 BEDDING)= 30 LIN. FT.
36" R.C. PIPE (CLASS III) (TY. 3 BEDDING)= 30 LIN. FT.

STA. 578+68 ℄ SCHOOL DR.- IN PLACE
DROP INLET 16' RT. WITH
18" X 169' C.M. PIPE CULVERT
TO D.I. @ STA. 580+47
REMOVE

STA. 580+47 ℄ SCHOOL DR.- IN PLACE
DROP INLET 23' RT. WITH
40" X 228' C.M. PIPE CULVERT
TO D.I. @ STA. 582+81
REMOVE

STA. 582+81 ℄ SCHOOL DR.- IN PLACE
DROP INLET 24' RT.
REMOVE

STA. 583+99 ℄ SCHOOL DR.- IN PLACE
40" X 231' C.M. PIPE CULVERT 27' RT.
TO D.I. @ STA. 582+81
REMOVE

STA. 585+13 ℄ SCHOOL DR.- IN PLACE
DROP INLET 34' LT. WITH
24" X 129' C.M. PIPE INLET ON LT.
REMOVE

STA. 585+20 ℄ SCHOOL DR.- IN PLACE
DROP INLET 22' RT. WITH
24" X 50' C.M. PIPE CULVERT
TO D.I. @ STA. 585+13 LT.
REMOVE

STA. 585+85 ℄ SCHOOL DR.- IN PLACE
36" X 126' PLASTIC PIPE CULVERT 26' RT.
TO D.I. @ STA. 586+51
REMOVE

STA. 586+51 ℄ SCHOOL DR.- IN PLACE
DROP INLET 26' RT. WITH
36" X 56' PLASTIC PIPE CULVERT
TO D.I. @ STA. 587+11
REMOVE

STA. 587+11 ℄ SCHOOL DR.- IN PLACE
DROP INLET 24' RT. WITH
36" X 20' C.M. PIPE CULVERT
TO D.I. @ STA. 587+33
REMOVE

STA. 587+33 ℄ SCHOOL DR.- IN PLACE
DROP INLET 23' RT. WITH
24" X 11' C.M. PIPE INLET
RETAIN

STA. 587+89 ℄ SCHOOL DR.- IN PLACE
24" X 57' C.M. PIPE OUTLET
WITH HDWL. RT., 27' RT.
TO D.I. @ STA. 588+19
REMOVE

STA. 588+19 ℄ SCHOOL DR.- IN PLACE
DROP INLET 19' RT. WITH
24" X 86' C.M. PIPE CULVERT
TO D.I. @ STA. 589+08
REMOVE

STA. 589+08 ℄ SCHOOL DR.- IN PLACE
DROP INLET 18' RT. WITH
24" X 57' C.M. PIPE INLET, HDWL. RT.
REMOVE

STATE OF ARKANSAS
REGISTERED PROFESSIONAL ENGINEER
No. 9808
JAMES L. BARR
8/24/13

PLAN MAIN LANES
STA. 575+00 TO 590+00

DATE REVISED	DATE FILMED	DATE REVISED	DATE FILMED

FED.RD. DIST.NO.	STATE	FED.AID PROJ.NO.	SHEET NO.	TOTAL SHEETS
6	ARK.			
JOB NO.		061276	150	438

(2) **PROFILE STA. 575+00 TO 590+00**

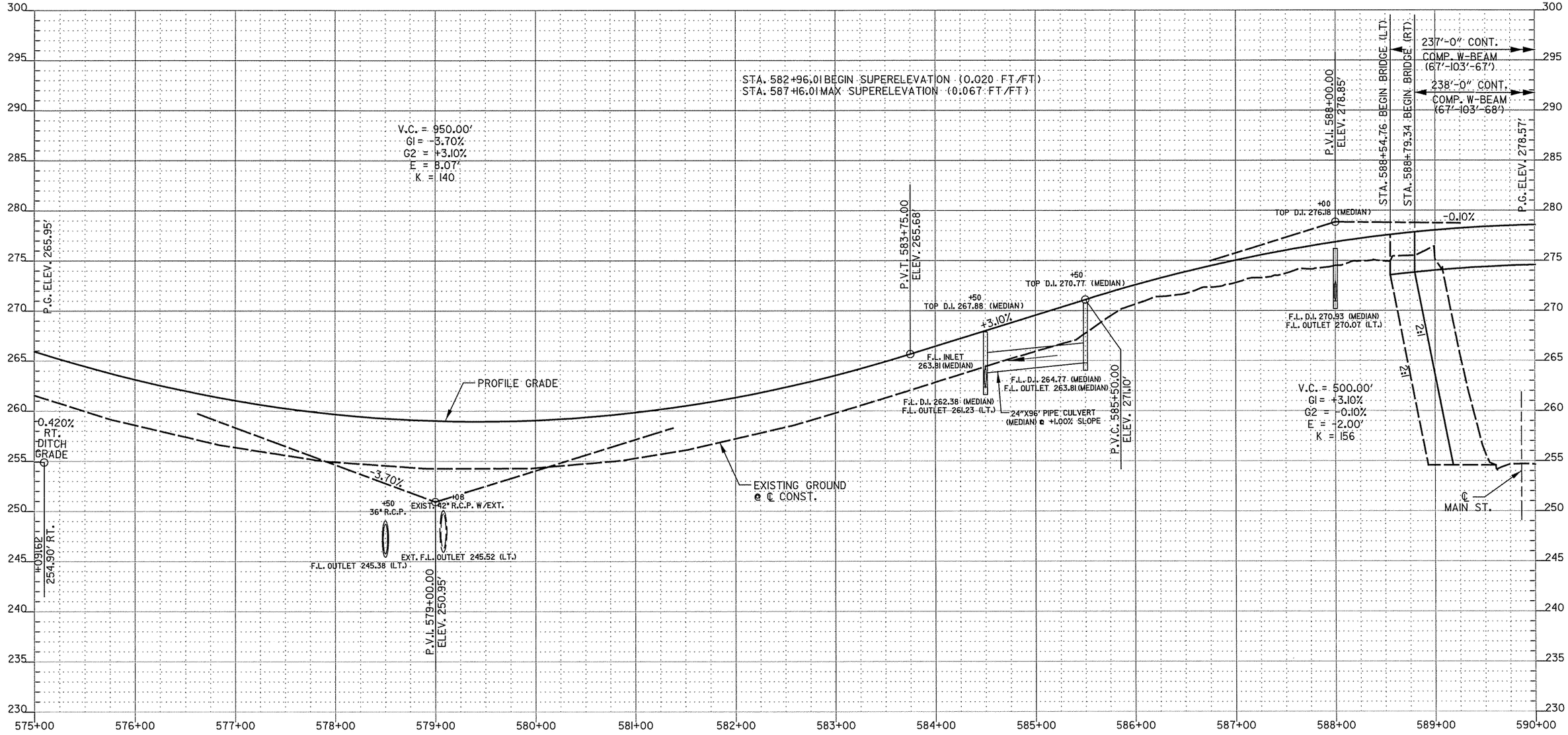

BM 972 - SQ CUT S.W.
CORN N.B. 167 BRIDGE
40.38' RT. ℄ CONST. HWY. 67
STA. 589+21.15
ELEV. 273.3521'

STATE OF ARKANSAS
REGISTERED PROFESSIONAL ENGINEER
No. 9808
JAMES L. BARR
8/20/13

PROFILE MAIN LANES
STA. 575+00 TO 590+00

DATE REVISED	DATE FILMED	DATE REVISED	DATE FILMED	FED.RD. DIST.NO.	STATE	FED.AID PROJ.NO.	SHEET NO.	TOTAL SHEETS
				6	ARK.			
				JOB NO.		061276	151	438

(2) PLAN STA. 590+00 TO 605+00

STA. 591+60 ℄ CONST. HWY. 67 CONSTRUCT
TYPE ST DROP INLET ALONG BARRIER WALL
3'-0" x 3'-0" x H= 5'-3"
WITH 24" x 84' R.C. PIPE CULVERT OUTLET ON LT.
(CLASS III) (TY. 3 BEDDING) WITH F.E.S. LT.

℄ CONST. HWY. 67
P.I. = 592+30.21
N = 194676.2281
E = 1274017.7631
DELTA = 30°14'17" RT.
DOC = 2°30'00"
T = 619.20'
L = 1209.52'
E = 82.17'
P.C. = 586+11.01
P.T. = 598+20.53
Ls = 420'
e = 0.067 FT/FT

℄ CONST.
CONCRETE DITCH PAVING (TYPE B)

STA.	STA.	LENGTH	SIDE	"W"	SQ. YDS.
591+60	591+60	50'	LT	4'	22.2
592+70	595+50	280'	RT	4'	124.4

STA. 597+10 ℄ CONST. HWY. 67 CONSTRUCT
TYPE ST DROP INLET ALONG BARRIER WALL
3'-0" x 3'-0" x H= 8'-5 11/16"
WITH 24" x 206' R.C. PIPE CULVERT CONNECT TO
D.I. e STA. 595+00 (CLASS III) (TY. 3 BEDDING)

STA. 595+00 ℄ CONST. HWY. 67 CONSTRUCT
TYPE ST DROP INLET ALONG BARRIER WALL
3'-0" x 3'-0" x H= 14'-0"
WITH 24" x 68' R.C. PIPE CULVERT OUTLET
THROUGH MSE WALL ON LT. (CLASS IV) (TY. 3 BEDDING)

STA. 599+00 ℄ CONST. HWY. 67 CONSTRUCT
TYPE ST DROP INLET ALONG BARRIER WALL
3'-0" x 3'-0" x H= 6'-1"
WITH 24" x 188' R.C. PIPE CULVERT CONNECT TO
D.I. e STA. 597+10 (CLASS III) (TY. 3 BEDDING)

STA. 599+00 ℄ CONST. HWY. 67 CONSTRUCT
TYPE RM DROP INLET ON RT.
4'-0" x 3'-0" x H= 3'-0"
WITH 24" x 60' R.C. PIPE CULVERT CONNECT TO
D.I. ON LT. (CLASS V) (TY. 3 BEDDING)

STA. 600+00.00 ℄ CONST. HWY. 67
END JOB 061276

STA. 601+35.53 END
PAVEMENT TRANSITION
MATCH EXIST. PVMT.

STA. 100+00.00 ℄ T.P. WHITE DR.=
STA. 201+92.47 ℄ CONST. MAIN ST.
◁ 104°21'05"

STA. 590+53.30 ℄ SCHOOL DR.=
STA. 202+05.96 ℄ MAIN ST.
◁ 60°27'32"

STA. 591+65 ℄ CONST.- IN PLACE
DROP INLET 4' LT. WITH
18" X 98' C.M. PIPE OUTLET IN MEDIAN
REMOVE

STA. 593+95 ℄ CONST. - IN PLACE
DROP INLET 3' LT. WITH
18" X 226' OPEN GRATE DRAIN IN MEDIAN
AND 18" X 76' R.C. OUTLET PIPE WITH HDWL. RT.
REMOVE

STA. 598+92 ℄ CONST. - IN PLACE
DROP INLET 3' LT. WITH
18" X 493' OPEN GRATE DRAIN IN MEDIAN
REMOVE

STA. 598+92 ℄ CONST. - IN PLACE
DROP INLET 61.14' RT. WITH
18" X 63' R.C. PIPE OUTLET LT.
CONNECTED TO DROP INLET IN MEDIAN
REMOVE

REMOVAL & DISPOSAL OF EXIST. GUARDRAIL LOCATION	GUARDRAIL (TYPE A)	TERMINAL ANCHOR POST (TYPE A)
STA. 590+78 TO STA. 592+78 ℄ CONST. HWY. 67 LT. - L.M.L.	200 LIN. FT.	1 EACH

STATE OF ARKANSAS
REGISTERED PROFESSIONAL ENGINEER
No. 9808
JAMES L. BARR
8/22/13

PLAN MAIN LANES
STA. 590+00 TO 605+00

r061276.plan5.dgn 8/19/2013 3:21:28 PM

DATE REVISED	DATE FILMED	DATE REVISED	DATE FILMED	FED.RD. DIST.NO.	STATE	FED.AID PROJ.NO.	SHEET NO.	TOTAL SHEETS
				6	ARK.			
				JOB NO.		061276	152	438

(2) PROFILE STA. 590+00 TO 605+00

STA. 597+15.53 MAX SUPERELEVATION (0.067 FT/FT)
STA. 601+35.53 END SUPERELEVATION (0.020 FT/FT)

P.G. ELEV. 278.57'
STA. 590+90.66 END BRIDGE (LT)
STA. 59+22.88 END BRIDGE (RT)
P.V.T. 590+50.00 ELEV. 278.60'
2:1
2:1
2:1
PROFILE GRADE
-0.10%
+60 TOP D.I. 277.82 (MEDIAN)
+00 TOP D.I. 277.48 (MEDIAN)
+40 TOP D.I. 276.96 (MEDIAN)
P.V.I. 597+50.00 ELEV. 277.90'
+00 TOP D.I. 275.14 (MEDIAN)
-1.65%
STA. 600+00.00 ℄ CONST. HWY. 67
END CONSTRUCTION
JOB 061276
ELEV. 273.78'
+00.00
TRANSITION TO MATCH EXISTING PAVEMENT
+35.53
P.V.I. 601+75.00 ELEV. 270.90'
EXISTING GROUND ℄ CONST.
F.L. D.I. 272.57 (MEDIAN)
F.L. OUTLET 271.73 (LT.)
+00 TOP D.I. 272.24 (RT.)
F.L. D.I. 269.24 (RT.)
F.L. OUTLET 269.06 (MEDIAN)
F.L. INLET 267.87 (MEDIAN)
F.L. D.I. 268.49 (MEDIAN)
F.L. OUTLET 267.87 (MEDIAN)
F.L. D.I. 269.06 (MEDIAN)
F.L. OUTLET 268.49 (MEDIAN)
24"X188' PIPE CULVERT (MEDIAN)
℄ +0.303% SLOPE
P.V.C. 596+00.00 ELEV. 278.05'
P.V.T. 599+00.00 ELEV. 275.43'
F.L. D.I. 262.98 (MEDIAN)
F.L. OUTLET 261.93 (LT.)
24"X206' PIPE CULVERT (MEDIAN)
℄ +0.301% SLOPE
V.C. = 300.00'
G1 = -0.10%
G2 = -1.65%
E = -0.58'
K = 194
STA. 590+84 FIBER OPTIC CABLE
0.830% LT. DITCH GRADE
STA. 590+46 WATER
STA. 590+43 WATER
+00.00 252.80' LT.
+00.00 255.29' LT.
STA. 590+24 ELV. 249.75' SANITARY SEWER

310 305 300 295 290 285 280 275 270 265 260 255 250 245 240

590+00 591+00 592+00 593+00 594+00 595+00 596+00 597+00 598+00 599+00 600+00 601+00 602+00 603+00 604+00 605+00

STATE OF ARKANSAS
REGISTERED PROFESSIONAL ENGINEER
No. 9808
JAMES L. BARR
8/20/13

PROFILE MAIN LANES
STA. 590+00 TO 605+00

r061276.pro5.dgn 8/19/2013 3:21:30 PM

DATE REVISED	DATE FILMED	DATE REVISED	DATE FILMED

FED.RD. DIST.NO.	STATE	FED.AID PROJ.NO.	SHEET NO.	TOTAL SHEETS
6	ARK.			
JOB NO.		061276	153	438

(2) INTERCHANGE LAYOUT REDMOND RD.

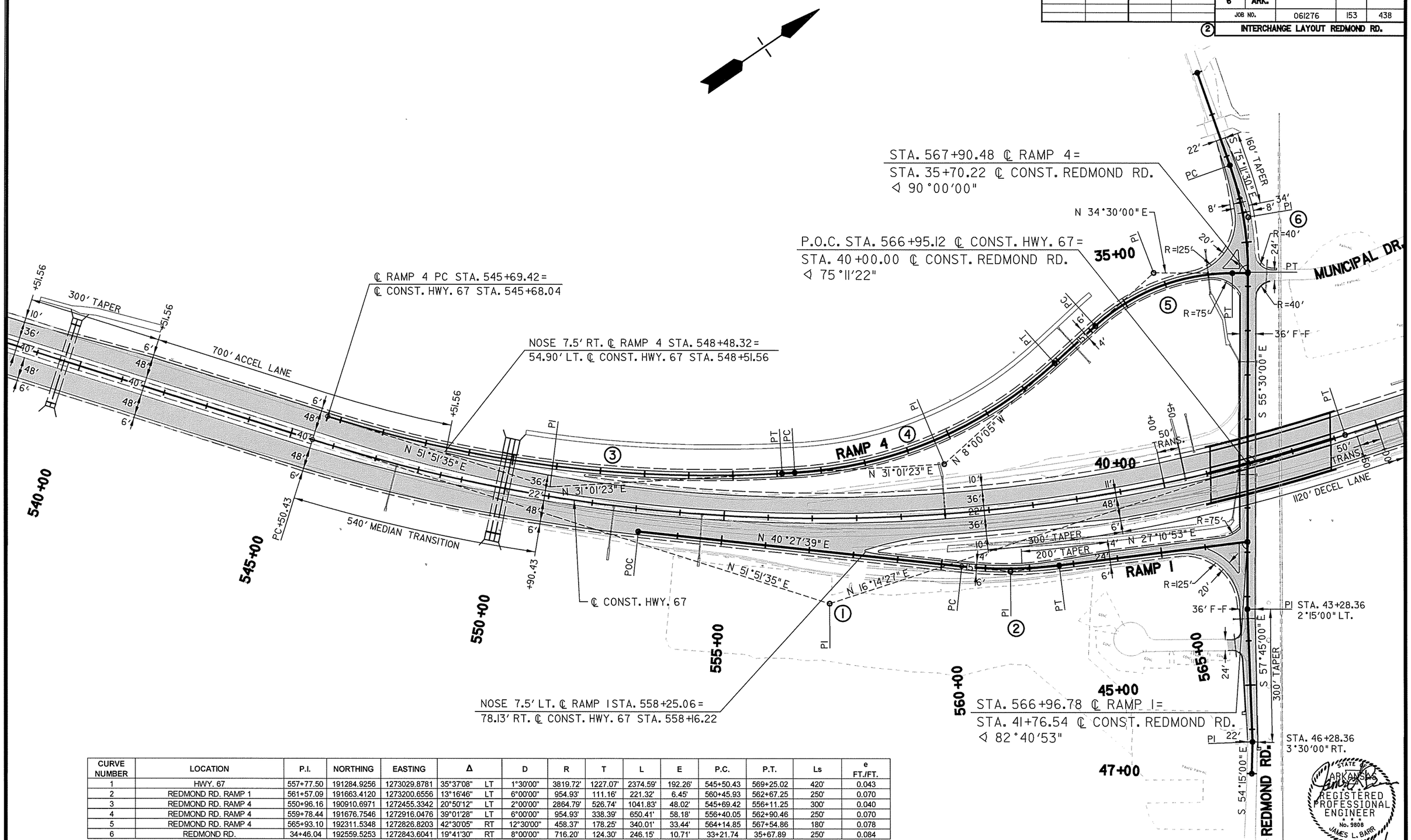

CURVE NUMBER	LOCATION	P.I.	NORTHING	EASTING	Δ	D	R	T	L	E	P.C.	P.T.	Ls	e FT./FT.
1	HWY. 67	557+77.50	191284.9256	1273029.8781	35°37'08" LT	1°30'00"	3819.72'	1227.07'	2374.59'	192.26'	545+50.43	569+25.02	420'	0.043
2	REDMOND RD. RAMP 1	561+57.09	191663.4120	1273200.6556	13°16'46" LT	6°00'00"	954.93'	111.16'	221.32'	6.45'	560+45.93	562+67.25	250'	0.070
3	REDMOND RD. RAMP 4	550+96.16	190910.6971	1272455.3342	20°50'12" LT	2°00'00"	2864.79'	526.74'	1041.83'	48.02'	545+69.42	556+11.25	300'	0.040
4	REDMOND RD. RAMP 4	559+78.44	191676.7546	1272916.0476	39°01'28" LT	6°00'00"	954.93'	338.39'	650.41'	58.18'	556+40.05	562+90.46	250'	0.070
5	REDMOND RD. RAMP 4	565+93.10	192311.5348	1272826.8203	42°30'05" RT	12°30'00"	458.37'	178.25'	340.01'	33.44'	564+14.85	567+54.86	180'	0.078
6	REDMOND RD.	34+46.04	192559.5253	1272843.6041	19°41'30" RT	8°00'00"	716.20'	124.30'	246.15'	10.71'	33+21.74	35+67.89	250'	0.084

STATE OF ARKANSAS
REGISTERED PROFESSIONAL ENGINEER
No. 9808
JAMES L. BARR
8/20/13

INTERCHANGE LAYOUT
REDMOND RD.

r061276.Interchange Layout Redmond Rd.dgn 8/19/2013 3:21:33 PM

DATE REVISED	DATE FILMED	DATE REVISED	DATE FILMED	FED.RD. DIST.NO.	STATE	FED.AID PROJ.NO.	SHEET NO.	TOTAL SHEETS
				6	ARK.			
				JOB NO.		061276	154	438

(2) REDMOND RD. STA. 31+00 TO 46+50

STA. 37+70.00 ℄ CONST. REDMOND RD. CONSTRUCT
DROP INLET ON LT. H= 5'-3"
WITH 8' EXTENSION AND 18" x 38' R.C.
PIPE CULVERT TO DROP INLET ON RT.
TYPE MO DROP INLET= 4' DIA.
TYPE C DROP INLET= 4'-0" x 3'-0"
18" R.C. PIPE (CLASS III) (TY. 3 BEDDING)= 38 LIN. FT.

CONCRETE DITCH PAVING (TYPE B)

STA.	STA.	LENGTH	SIDE	"W"	SQ. YDS.
36+18	37+32	122'	RT	6'	81.3
45+63	45+63	9'	RT	6'	6.0
46+43	46+43	8'	LT	6'	5.3

STA. 567+90.48 ℄ RAMP 4 =
STA. 35+70.22 ℄ CONST. REDMOND RD.
◁ 90°00'00"

STA. 35+75 ℄ CONST. REDMOND RD. - IN PLACE
24"X52' C.M. PIPE CULVERT LT. SIDE DRAIN
REMOVE AND INSTALL
24"X68' PIPE CULVERT
LT. SIDE DRAIN

STA. 40+25.00 ℄ CONST. REDMOND RD. CONSTRUCT
DROP INLET ON LT. H= 5'-3"
WITH 18" x 38' R.C. PIPE CULVERT TO DROP INLET ON RT.
TYPE MO DROP INLET= 4' DIA.
TYPE C DROP INLET= 4'-0" x 3'-0"
18" R.C. PIPE (CLASS III) (TY. 3 BEDDING)= 38 LIN. FT.

STA. 43+50.00 ℄ CONST. REDMOND RD. CONSTRUCT
DROP INLET ON LT. H= 5'-3"
WITH 18" x 52' R.C. PIPE CULVERT ON RT. WITH F.E.S.
TYPE MO DROP INLET= 4' DIA.
TYPE C DROP INLET= 4'-0" x 3'-0"
18" R.C. PIPE (CLASS V) (TY. 3 BEDDING)= 52 LIN. FT.
18" F.E.S. = 1 EACH

STA. 46+15 ℄ CONST. REDMOND RD. - IN PLACE
15"X42' C.M. PIPE CULVERT RT. SIDE DRAIN
RETAIN

P.O.C. STA. 566+95.12 ℄ CONST. HWY. 67 =
STA. 40+00.00 ℄ CONST. REDMOND RD.
◁ 75°11'22"

STA. 46+28.36 ℄ CONST. REDMOND RD.
END CONSTRUCTION

STA. 32+59.49 ℄ CONST. REDMOND RD.
BEGIN CONSTRUCTION

℄ REDMOND RD.
P.I. = 34+46.04
N = 192559.5253
E = 1272843.6041
DELTA = 19°41'30" RT
DOC = 8°00'00"
T = 124.30'
L = 246.15'
E = 10.71'
P.C. = 33+21.74
P.T. = 35+67.89
e = 0.084'/'
Ls = 250'

STA. 37+70.00 ℄ CONST. REDMOND RD. CONSTRUCT
DROP INLET ON RT. H= 8'-6"
WITH 8' EXTENSION AND 24" x 36' R.C. PIPE OUTLET WITH F.E.S. ON RT.
TYPE MO DROP INLET= 4' DIA.
TYPE C DROP INLET= 4'-0" x 3'-0"
24" R.C. PIPE (CLASS III) (TY. 3 BEDDING)= 36 LIN. FT.
24" F.E.S. = 1 EACH

STA. 40+25.00 ℄ CONST. REDMOND RD. CONSTRUCT
DROP INLET ON RT. H= 5'-4 7/8"
WITH 24" x 252' PIPE CULVERT TO DROP INLET ON RT.
TYPE MO DROP INLET= 4' DIA.
TYPE C DROP INLET= 4'-0" x 3'-0"
24" SLPPMCCS PIPE (TY. 2 BEDDING)= 252 LIN. FT.
24" R.C. PIPE (CLASS III) (TY. 3 BEDDING)= 252 LIN. FT.

STA. 566+96.78 ℄ RAMP 1 =
STA. 41+76.54 ℄ CONST. REDMOND RD.
◁ 82°40'53"

STA. 41+27.14 ℄ CONST. REDMOND RD. CONSTRUCT
24" x 96' R.C. PIPE INLET ON RT. WITH F.E.S.
CONNECT TO DROP INLET ON RT. @ STA. 40+25
24" R.C. PIPE (CLASS III) (TY. 3 BEDDING)= 96 LIN. FT.
24" F.E.S. = 1 EACH

STA. 44+00 ℄ CONST. - IN PLACE
15"X52' C.M. PIPE CULVERT RT. SIDE DRAIN
REMOVE AND INSTALL
18"X52' PIPE CULVERT
RT. SIDE DRAIN

STATE OF ARKANSAS
REGISTERED PROFESSIONAL ENGINEER
No. 9808
JAMES L. BARR
8/20/13

REDMOND RD.
STA. 31+00 TO 46+50

r061276.Redmond Rd plan.dgn 8/19/2013 3:37:34 PM

DATE REVISED	DATE FILMED	DATE REVISED	DATE FILMED

FED.RD. DIST.NO.	STATE	FED.AID PROJ.NO.	SHEET NO.	TOTAL SHEETS
6	ARK.			
JOB NO.		061276	155	438

(2) REDMOND RD. STA. 31+00 TO 47+00

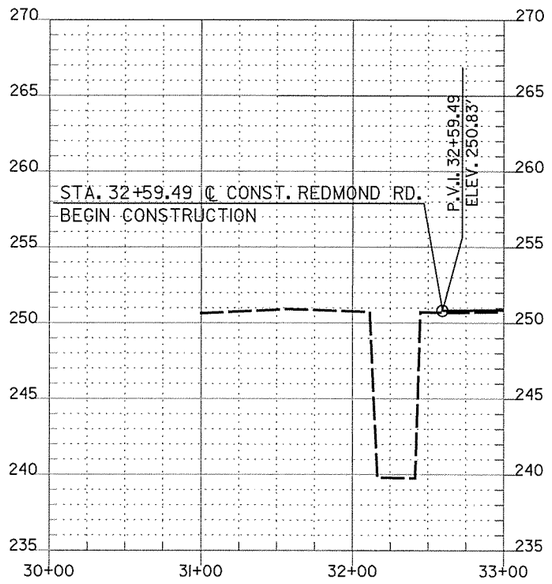

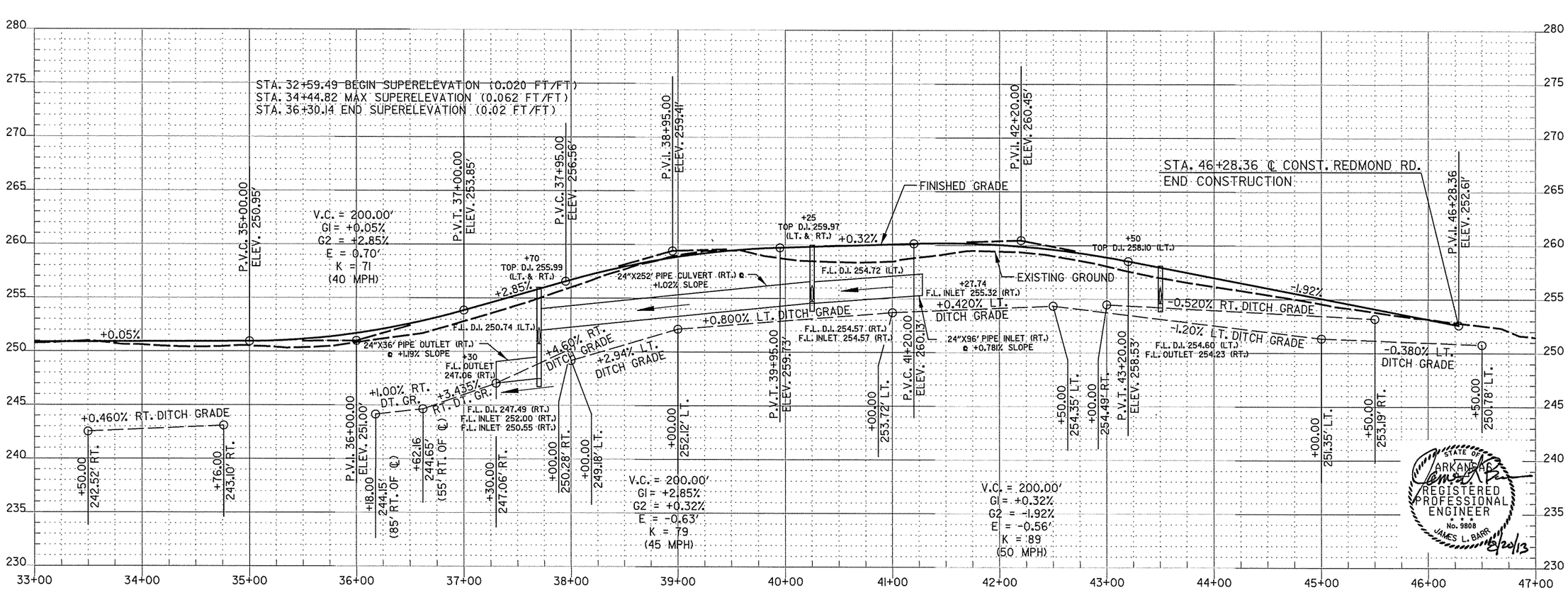

REDMOND RD.
STA. 31+00 TO 47+00

DATE REVISED	DATE FILMED	DATE REVISED	DATE FILMED	FED.RD. DIST.NO.	STATE	FED.AID PROJ.NO.	SHEET NO.	TOTAL SHEETS
				6	ARK.			
				JOB NO.		061276	156	438

(2) **PROFILE STA. 553+00 TO 568+00**

TRANSITION MAIN LANES DECEL LANE ON RT.
FROM +0.043 FT./FT. TO -0.020 FT./FT. IN 355.39'

BEGIN TRANSITION - STA. 554+60.83 ℄ CONST. (+0.043 FT./FT.)
END TRANSITION - STA. 558+16.22 ℄ CONST. (-0.020 FT./FT.)

STA. 558+58.43 BEGIN SUPERELEVATION
STA. 561+08.43 MAX SUPERELEVATION (0.070 FT./FT.)
STA. 562+04.75 MAX SUPERELEVATION (0.070 FT./FT.)
STA. 564+54.75 END SUPERELEVATION

7.5' LT. ℄ RAMP I REDMOND RD. STA. 558+25.06 =
78.13' RT. ℄ CONST. HWY. 67 STA. 558+16.22
ELEV. 259.46'

MAIN LANES

+1.97%

-1.05%

0.00%

FINISHED GRADE

EXISTING GROUND

-0.090% LT. DITCH GRADE

-0.330% LT. DITCH GRADE

-0.500% RT. DITCH GRADE

P.V.C. 559+00.00
ELEV. 260.94'

V.C. = 300.00'
G1 = +1.97%
G2 = -1.05%
E = -1.13'
K = 99
(50 MPH)

+00.00
256.75' LT.

P.V.I. 560+50.00
ELEV. 263.89'

P.V.T. 562+00.00
ELEV. 262.32'

P.V.C. 563+40.00
ELEV. 260.86'

V.C. = 200.00'
G1 = -1.05%
G2 = 0.00%
E = 0.26'
K = 190
(70 MPH)

+00.00
256.48' LT.

P.V.I. 564+40.00
ELEV. 259.81'

P.V.T. 565+40.00
ELEV. 259.81'

+00.00
255.82' LT.

+00.00
254.74' RT.

+50.00
254.49' RT.

P.V.I. 566+80.60
ELEV. 259.81'

7.5' LT. ℄ RAMP I REDMOND RD. STA. 566+80.60 =
17.0' RT. ℄ CONST. REDMOND RD. STA. 41+71.16
ELEV. 259.81'

300 295 290 285 280 275 270 265 260 255 250 245 240 235 230

553+00 554+00 555+00 556+00 557+00 558+00 559+00 560+00 561+00 562+00 563+00 564+00 565+00 566+00 567+00 568+00

STATE OF ARKANSAS
JAMES L. BARR
REGISTERED PROFESSIONAL ENGINEER
No. 9808
8/23/13

PROFILE RAMP I REDMOND RD. STA. 553+00 TO 568+00

DATE REVISED	DATE FILMED	DATE REVISED	DATE FILMED	FED.RD. DIST.NO.	STATE	FED.AID PROJ.NO.	SHEET NO.	TOTAL SHEETS
				6	ARK.			
				JOB NO.		061276	157	438

(2) PROFILE STA. 545+00 TO 569+00

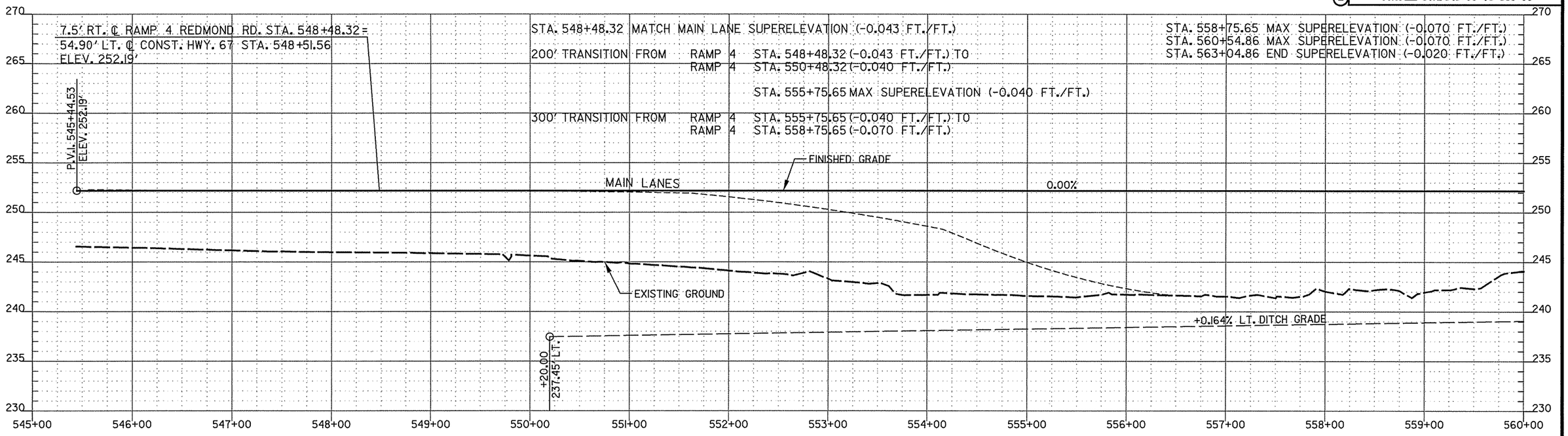

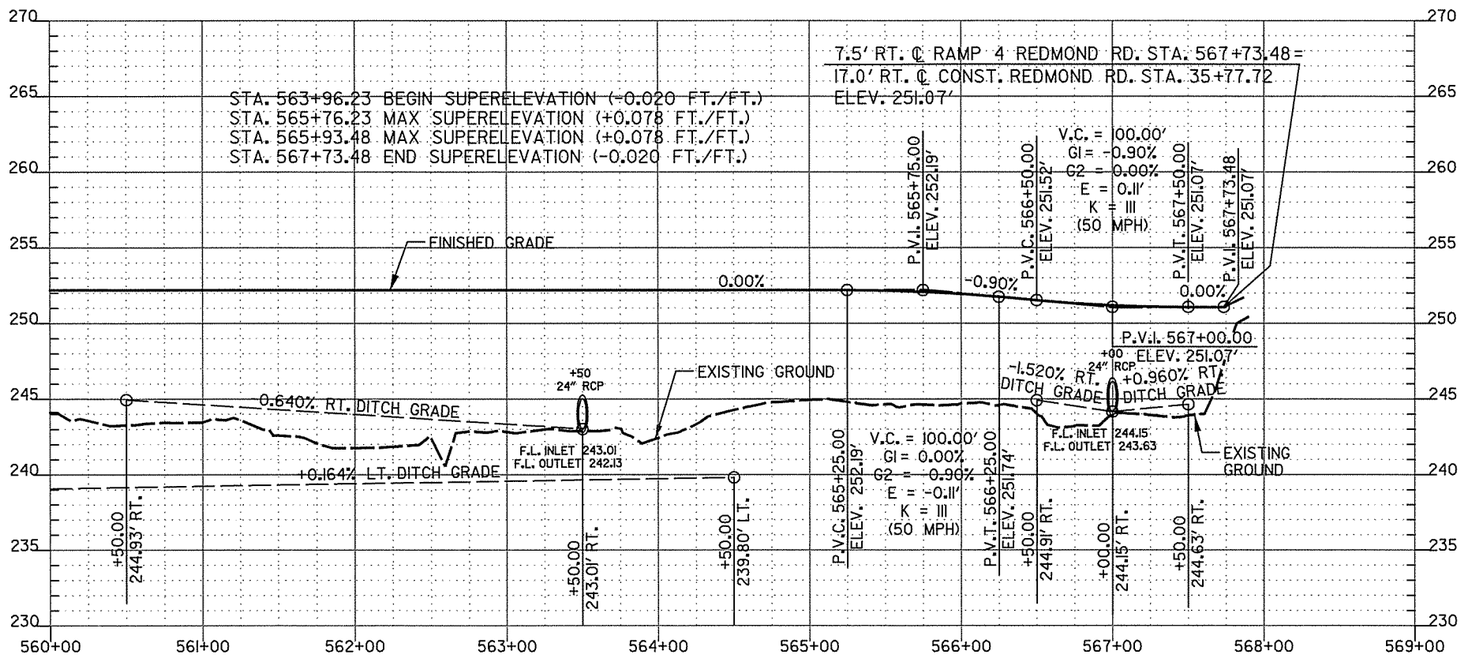

STATE OF ARKANSAS
REGISTERED PROFESSIONAL ENGINEER
No. 9808
JAMES L. BARR
8/20/13

PROFILE RAMP 4
REDMOND RD.
STA. 545+00 TO 569+00

DATE REVISED	DATE FILMED	DATE REVISED	DATE FILMED	FED.RD. DIST.NO.	STATE	FED.AID PROJ.NO.	SHEET NO.	TOTAL SHEETS
				6	ARK.			
				JOB NO.		061276	158	438

(2) INTERCHANGE LAYOUT MAIN ST.

STA. 344+43.03 ℄ MARSHALL RD. =
STA. 197+80.59 ℄ CONST. MAIN ST.
◁ 82°53'51"

P.O.C. STA. 589+87.20 ℄ CONST. HWY. 67 =
STA. 200+00.00 ℄ MAIN ST.
◁ 66°29'28"

STA. 589+42.30 ℄ RAMP 4 =
STA. 197+62.86 ℄ MAIN ST.
◁ 91°32'41"

NOSE 7.5' RT. ℄ RAMP 4 STA. 583+21.88 =
62.74' LT. ℄ CONST. HWY. 67 STA. 583+22.04

NOSE 7.5' LT. ℄ RAMP I STA. 575+09.62 =
64.27' RT. ℄ CONST. HWY. 67 STA. 575+09.49

STA. 590+53.30 ℄ SCHOOL DR. =
STA. 202+05.96 ℄ MAIN ST.
◁ 60°27'32"

STA. 100+00.00 ℄ T.P. WHITE DR. =
STA. 201+92.47 ℄ CONST. MAIN ST.
◁ 104°21'05"

STA. 600+00 ℄ CONST. HWY. 67
END JOB 061276

MARSHALL RD.
MAIN ST.
RAMP 4
RAMP I
SCHOOL DR.
T.P. WHITE DR.
℄ CONST. HWY. 67
700' ACCEL LANE
300' TAPER
1120' DECEL LANE
200' TRANSITION
50' TRANS.
CONC. ISLAND
PAVED PARKING

CURVE NUMBER	LOCATION	P.I.	NORTHING	EASTING	Δ		D	R	T	L	E	P.C.	P.T.	Ls	e FT./FT.
7	HWY. 67	592+30.21	194676.2281	1274017.7631	30°14'17"	RT	2°30'00"	2291.83'	619.20'	1209.52'	82.17'	586+11.01	598+20.53	420'	0.067
8	MAIN ST. RAMP 1	571+89.49	192702.5411	1273496.4694	3°37'38"	RT	3°00'00"	1909.86'	60.47'	120.90'	.96'	571+29.02	572+49.92	NA	NA
9	MAIN ST. RAMP 1	578+04.14	193280.6429	1273705.3738	5°13'14"	LT	3°00'00"	1909.86'	87.07'	174.02'	1.98'	577+17.07	578+91.09	250'	0.04
10	MAIN ST. RAMP 4	582+64.81	193763.7571	1273698.3201	12°33'33"	LT	3°00'00"	1909.86'	210.16'	418.64'	11.53'	580+54.65	584+73.29	300'	0.057
11	SCHOOL DR.	578+41.96	193298.8303	1273737.0008	52°43'14"	RT	36°30'00"	156.97'	77.79'	144.44'	18.22'	577+64.17	579+08.61	MATCH	EXIST.
12	SCHOOL DR.	585+49.18	193993.8396	1273918.6536	17°01'50"	RT	5°00'00"	1145.92'	171.57'	340.61'	12.77'	583+77.61	587+18.22	250'	0.061
13	MAIN ST.	202+95.02	194421.6865	1274273.7160	41°41'43"	RT	24°30'00"	233.86'	89.06'	170.18'	16.38'	202+05.96	203+76.14	MATCH	EXIST.
14	T.P. WHITE	103+52.72	194763.7246	1274271.3486	28°00'55"	RT	10°00'00"	572.96'	142.94'	280.15'	17.56'	102+09.78	104+89.93	MATCH	EXIST.

STATE OF ARKANSAS
REGISTERED PROFESSIONAL ENGINEER
No. 9808
JAMES L. BARR
8/20/13

INTERCHANGE LAYOUT
MAIN ST.

8/19/2013 3:10:47 PM

DATE REVISED	DATE FILMED	DATE REVISED	DATE FILMED	FED.RD. DIST.NO.	STATE	FED.AID PROJ.NO.	SHEET NO.	TOTAL SHEETS
				6	ARK.			
				JOB NO.		061276	159	438

(2) PLAN MAIN ST. STA. 194+00 TO 205+00

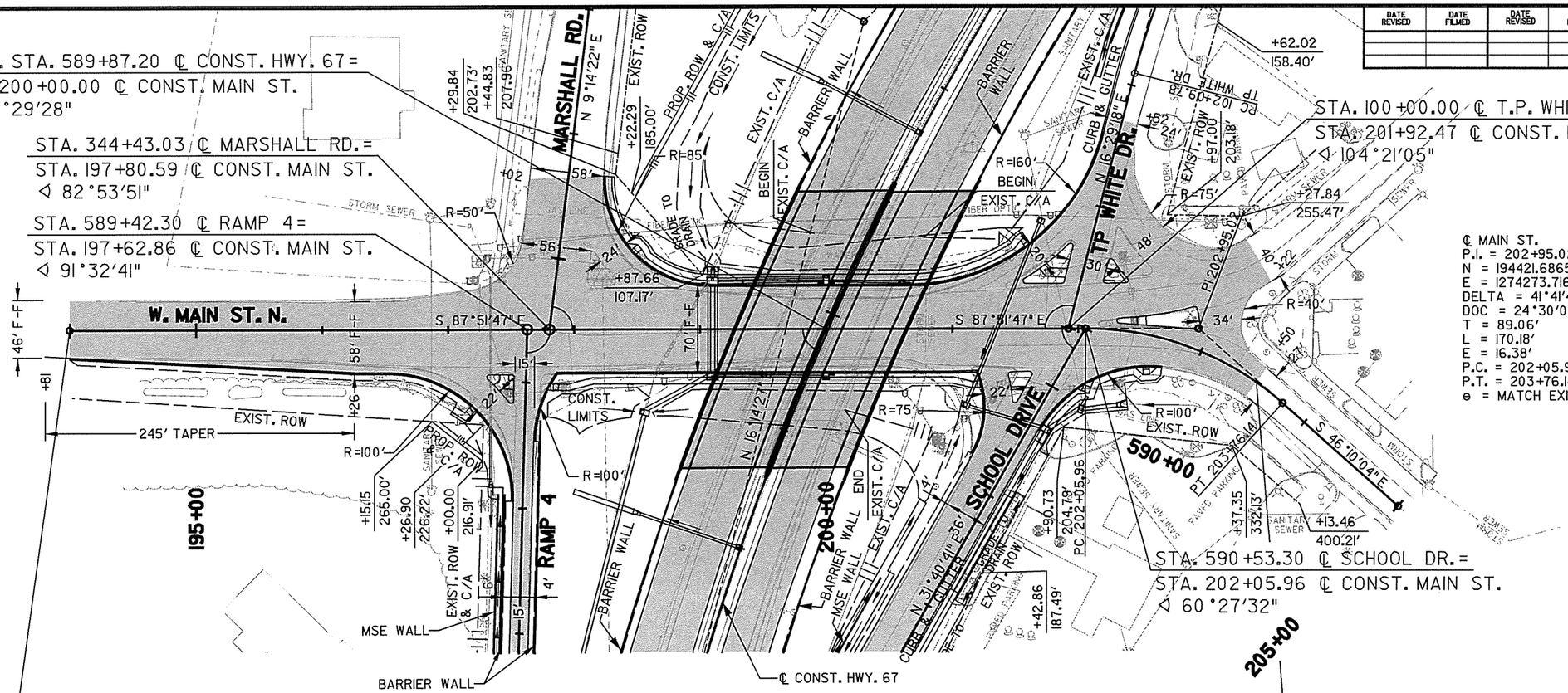
P.O.C. STA. 589+87.20 ℄ CONST. HWY. 67 =
STA. 200+00.00 ℄ CONST. MAIN ST.
◁ 66°29'28"
STA. 344+43.03 ℄ MARSHALL RD. =
STA. 197+80.59 ℄ CONST. MAIN ST.
◁ 82°53'51"
STA. 589+42.30 ℄ RAMP 4 =
STA. 197+62.86 ℄ CONST. MAIN ST.
◁ 91°32'41"
MARSHALL RD.
N 9°14'22" E
W. MAIN ST. N.
S 87°51'47" E
S 87°51'47" E
TP WHITE DR.
N 16°29'18" E
SCHOOL DRIVE
N 16°14'27" E
N 31°40'41" E
S 46°10'04" E
RAMP 4
EXIST. ROW
PROP. ROW & C/A
CONST. LIMITS
EXIST. C/A
BARRIER WALL
MSE WALL
EXIST. ROW & C/A
245' TAPER
R=100'
R=85'
R=50'
R=160'
R=75'
R=40'
CONST. LIMITS
BEGIN EXIST. C/A
BEGIN STATE DRAIN
EXIST. C/A
EXIST. ROW
CURB & GUTTER
MSE WALL END
EXIST. C/A
EXIST. ROW
EXIST. C/A
EXIST. ROW
EXIST. C/A
EXIST. ROW

DATE REVISED	DATE FILMED	DATE REVISED	DATE FILMED	FED.RD. DIST.NO.	STATE	FED.AID PROJ.NO.	SHEET NO.	TOTAL SHEETS
				6	ARK.			
				JOB NO.		061276	160	438

(2) PROFILE MAIN ST. STA. 194+00 TO 205+00

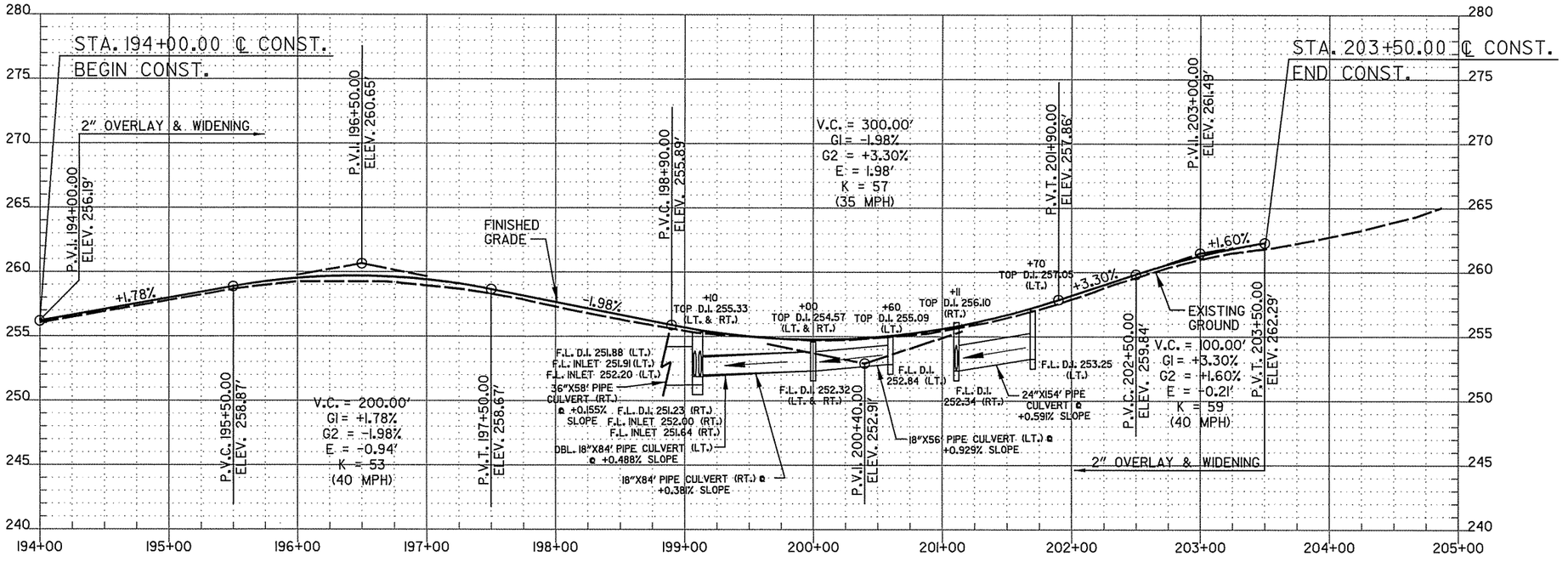

STATE OF ARKANSAS
REGISTERED PROFESSIONAL ENGINEER
No. 3808
JAMES L. BARR
8/20/13

PROFILE MAIN ST.
STA. 194+00 TO 205+00

DATE REVISED	DATE FILMED	DATE REVISED	DATE FILMED	FED.RD. DIST.NO.	STATE	FED.AID PROJ.NO.	SHEET NO.	TOTAL SHEETS
				6	ARK.			
				JOB NO.		061276	161	438

(2) PROFILE STA. 571+00 TO 586+00

STA. 575+29.57 BEGIN SUPERELEVATION (-0.02 FT./FT.)
STA. 577+79.57 MAX SUPERELEVATION (+0.040 FT./FT.)
STA. 578+28.59 MAX SUPERELEVATION (+0.040 FT./FT.)
STA. 580+78.59 END SUPERELEVATION (-0.02 FT./FT.)

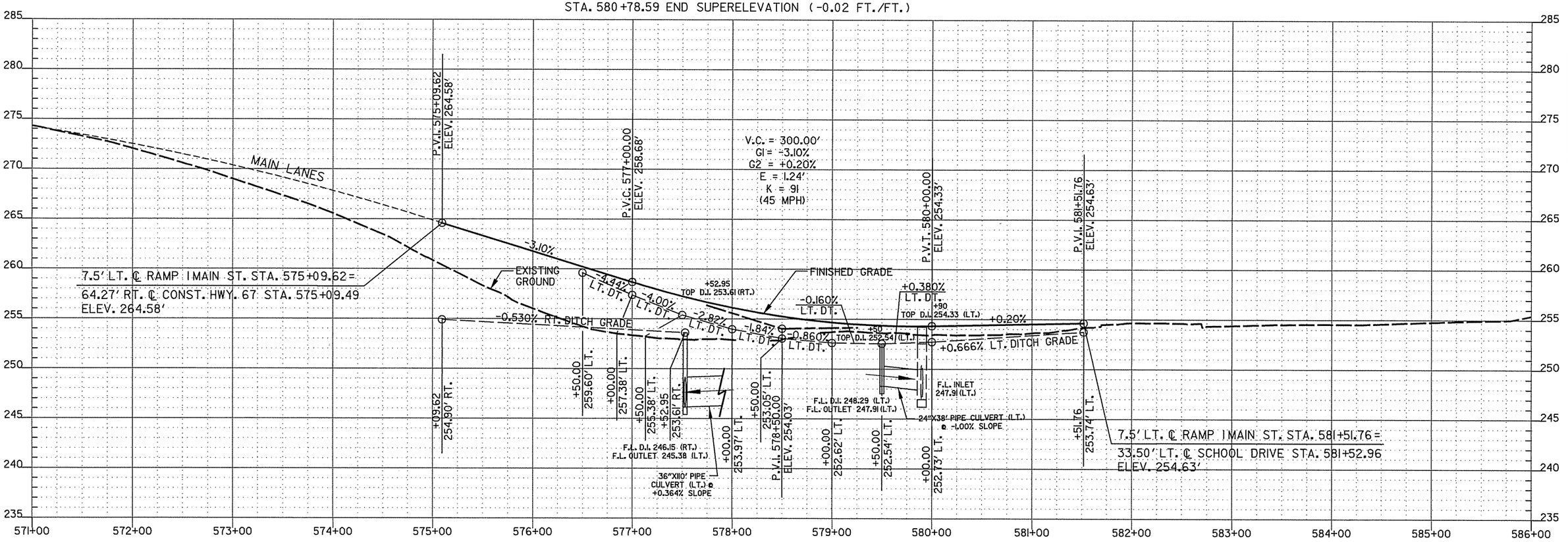

STATE OF ARKANSAS
JAMES L. BARR
REGISTERED PROFESSIONAL ENGINEER
No. 9808
5/20/13

PROFILE RAMP I
MAIN ST.
STA. 571+00 TO 586+00

DATE REVISED	DATE FILMED	DATE REVISED	DATE FILMED

FED.RD. DIST.NO.	STATE	FED.AID PROJ.NO.	SHEET NO.	TOTAL SHEETS
6	ARK.			
JOB NO.		061276	162	438

(2) PROFILE STA. 575+00 TO 590+00

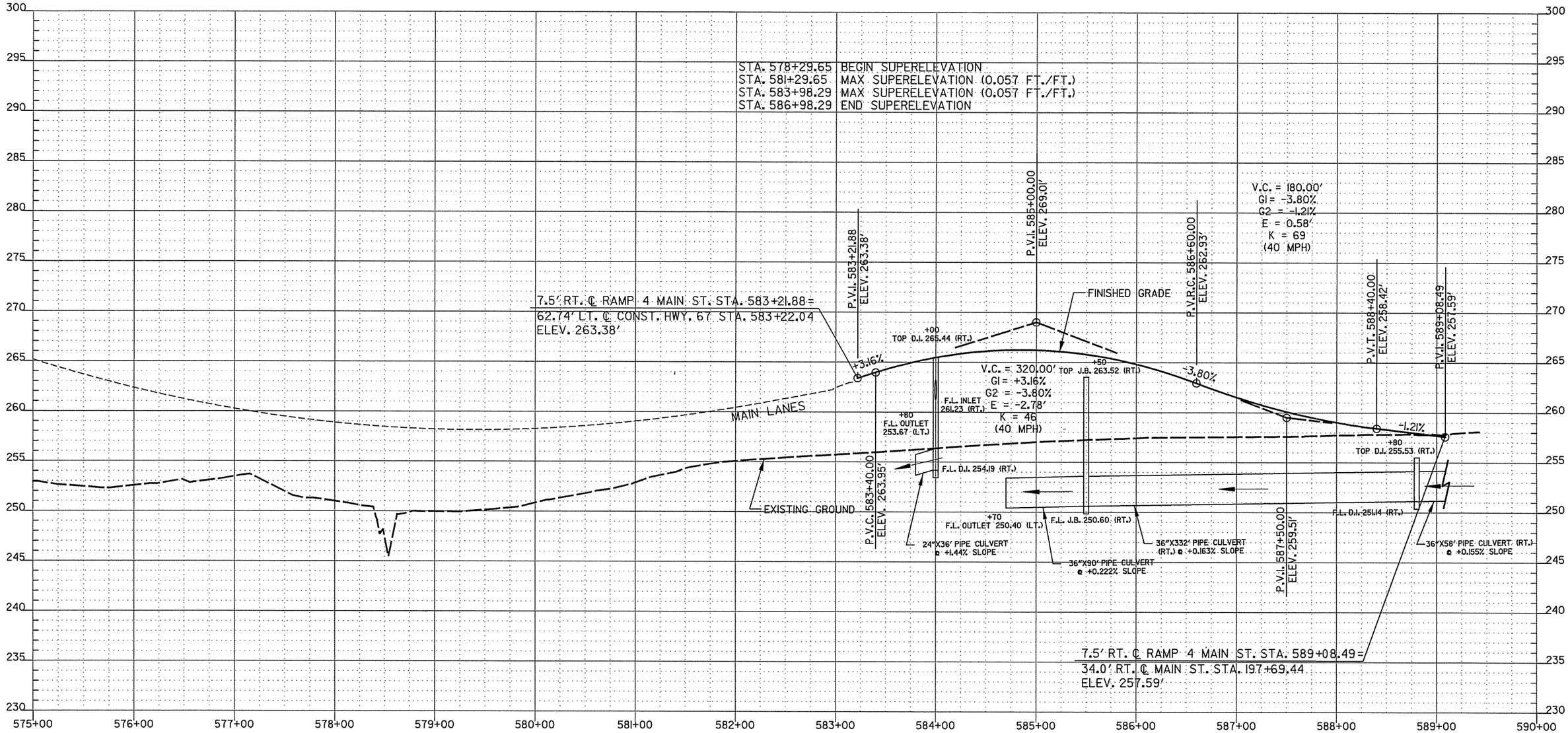

STATE OF ARKANSAS
JAMES L. BARR
REGISTERED PROFESSIONAL ENGINEER
No. 9808
5/20/13

PROFILE MAIN ST.
RAMP 4
STA. 575+00 TO 590+00

DATE REVISED	DATE FILMED	DATE REVISED	DATE FILMED	FED.RD. DIST.NO.	STATE	FED.AID PROJ.NO.	SHEET NO.	TOTAL SHEETS
				6	ARK.			
				JOB NO.		061276	163	438

(2) PROFILE STA. 577+00 TO 591+00

STA. 581+90.11 BEGIN SUPERELEVATION
STA. 584+40.11 MAX SUPERELEVATION (+0.061 FT./FT.)
STA. 586+55.72 MAX SUPERELEVATION (+0.061 FT./FT.)
STA. 589+05.72 END SUPERELEVATION

V.C. = 300.00'
G1 = -0.84%
G2 = +0.30%
E = 0.43'
K = 263

STA. 581+52.96 ℄ SCHOOL DR. =
26.00' RT. ℄ RAMP I STA. 581+51.76
33.50' RT. P.C. RAMP I STA. 581+51.76
ELEV. 253.96'

7.5' RT. ℄ SCHOOL DR. STA. 590+18.47 =
34.00' RT. ℄ MAIN ST. STA. 201+95.31
ELEV. 257.36'

V.C. = 200.00'
G1 = +0.30%
G2 = +0.98%
E = 0.17'
K = 294

P.V.I. 577+64.17 ELEV. 255.48'
P.V.C. 578+50.00 ELEV. 254.76'
P.V.T. 581+50.00 ELEV. 253.95'
P.V.C. 588+00.00 ELEV. 255.90'
P.V.T. 590+00.00 ELEV. 257.18'
P.V.I. 590+18.47 ELEV. 257.36'
P.V.I. 580+00.00 ELEV. 253.50'
P.V.I. 589+00.00 ELEV. 255.20'

FINISHED GRADE
EXISTING GROUND

-0.84% TOP D.I. 253.90 (RT.)
+56 TOP D.I. 254.34 (RT.)
+75 TOP D.I. 252.93 (RT.)
+47 TOP D.I. 254.18 (LT.)
+58 TOP D.I. 254.38 (RT.)
+80 TOP D.I. 254.65 (RT.)
+70 TOP D.I. 255.25 (RT.)
+75 TOP D.I. 255.75 (LT.)
+00 TOP D.I. 256.02 (RT.)
+30 TOP D.I. 257.22 (RT.)
+68 TOP J.B. 257.71 (RT.)
+95

-0.700%
+1.03% LT. DITCH GRADE
+0.30%
+0.580%
-1.64%
+0.180% LT. DT. GR.
+0.413% LT. DITCH GRADE
+0.98%

24"X28' PIPE CULVERT (RT.) @ -1.00% SLOPE
24"X52' R.C. PIPE CULVERT (LT.) @ +1.44% SLOPE
24"X8' R.C. PIPE CULVERT EXT. (RT.) @ +1.15% SLOPE
+17 SLOPE

36"XII0' PIPE CULVERT (LT.) @ +0.364% SLOPE
36"XI08' PIPE CULVERT (RT.) @ +0.361% SLOPE
36"X68' PIPE CULVERT (RT.) @ +0.353% SLOPE
48"XI26' PIPE CULVERT (RT.) @ +0.341% SLOPE
48"X86' PIPE CULVERT (RT.) @ +0.314% SLOPE
48"X200' PIPE CULVERT (RT.) @ +0.305% SLOPE
48"X248' PIPE CULVERT (RT.) @ +0.294% SLOPE
42"X234' PIPE CULVERT (RT.) @ +0.70% SLOPE
36"X30' PIPE CULVERT (RT.) @ +1.50% SLOPE
36"X30' PIPE CULVERT (RT.) @ +1.10% SLOPE

EXIST. F.L. OUTLET 247.63 (RT.)
F.L. D.I. 248.68 (LT.)
F.L. OUTLET 248.40 (LT.)
F.L. D.I. 246.55 (RT.)
F.L. INLET 246.55 (RT.)
F.L. D.I. 246.94 (RT.)
F.L. INLET 246.94 (RT.)
F.L. D.I. 247.18 (RT.)
F.L. INLET 247.18 (RT.)
F.L. D.I. 247.61 (RT.)
F.L. INLET 248.40 (LT.)
F.L. INLET 247.61 (RT.)
F.L. D.I. 247.88 (RT.)
F.L. INLET 247.88 (RT.)
F.L. D.I. 248.49 (RT.)
F.L. INLET 249.00 (LT.)
F.L. INLET 248.49 (RT.)
F.L. D.I. 249.75 (LT.)
F.L. OUTLET 249.00 (LT.)
F.L. D.I. 249.22 (RT.)
F.L. INLET 249.77 (RT.)
F.L. D.I. 251.41 (RT.)
F.L. INLET 252.20 (LT.)
F.L. INLET 252.26 (RT.)
F.L. J.B. 252.71 (RT.)
F.L. INLET EXT. 253.80 (RT.)
F.L. INLET 253.51 (RT.)

+64.17 CENTERLINE SCHOOL DR. +52.96 CONTROL LINE, 7.5' LT. OF PVMT EDGE +21.61

295 290 285 280 275 270 265 260 255 250 245 240 235 230 225

577+00 578+00 579+00 580+00 581+00 582+00 583+00 584+00 585+00 586+00 587+00 588+00 589+00 590+00 591+00

STATE OF ARKANSAS
James L. Barr
REGISTERED PROFESSIONAL ENGINEER
No. 9808
JAMES L. BARR
8/20/13

SCHOOL DR.
STA. 577+00 TO 591+00

r061276.School & T.P.pro.dgn 8/19/2013 2:17:20 PM

DATE REVISED	DATE FILMED	DATE REVISED	DATE FILMED	FED.RD. DIST.NO.	STATE	FED.AID PROJ.NO.	SHEET NO.	TOTAL SHEETS
				6	ARK.			
				JOB NO.		061276	164	438

(2) SUMMARY OF TRAFFIC SIGNAL QUANTITIES

SUMMARY OF TRAFFIC SIGNAL QUANTITIES

	ITEM NO.	ITEM	HWY. 67/ MAIN ST.	UNIT
	SP & 706	TRAFFIC SIGNAL HEAD, LED, (3 SECTION, 1 WAY)	14	EACH
	SP & 706	TRAFFIC SIGNAL HEAD, LED, (4 SECTION, 1 WAY)	3	EACH
	SP & 707	COUNTDOWN PEDESTRIAN SIGNAL HEAD, LED	10	EACH
	708	TRAFFIC SIGNAL CABLE (5C/14 A.W.G.)	8594	LIN. FT.
	708	TRAFFIC SIGNAL CABLE (7C/14 A.W.G.)	221	LIN. FT.
	708	TRAFFIC SIGNAL CABLE (12C/14 A.W.G.)	1737	LIN. FT.
	708	TRAFFIC SIGNAL CABLE (20C/14 A.W.G.)	1193	LIN. FT.
	710	NON-METALLIC CONDUIT (3")	1993	LIN. FT.
	711	CONCRETE PULL BOX (TYPE 1)	3	EACH
	711	CONCRETE PULL BOX (TYPE 1 HD)	1	EACH
	711	CONCRETE PULL BOX (TYPE 2)	8	EACH
	711	CONCRETE PULL BOX (TYPE 2 HD)	9	EACH
	714	TRAFFIC SIGNAL MAST ARM AND POLE WITH FOUNDATION (22')	2	EACH
	714	TRAFFIC SIGNAL MAST ARM AND POLE WITH FOUNDATION (28')	1	EACH
	715	TRAFFIC SIGNAL PEDESTAL POLE WITH FOUNDATION	4	EACH
*	SP & 733	VIDEO DETECTOR (CLR)	13	EACH
	733	VIDEO CABLE	5105	LIN. FT.
	SP	18" STREET NAME SIGN	2	EACH
	SP	ELECTRICAL CONDUCTORS-IN-CONDUIT (1C/8 A.W.G., EGC)	1544	LIN. FT.
	SP	ELECTRICAL CONDUCTORS-IN-CONDUIT (1C/12 A.W.G., EGC)	294	LIN. FT.
	SP	ELECTRICAL CONDUCTORS FOR LUMINAIRES	1935	LIN. FT.
	SP	LUMINAIRE ASSEMBLY	2	EACH
	SP	TRAFFIC SIGNAL CONTROLLER (MODIFICATION)	1	EACH

* ONE ADDITIONAL VIDEO DETECTOR INCLUDED FOR FUTURE NEEDS.

STATE OF ARKANSAS
REGISTERED PROFESSIONAL ENGINEER
No. 9808
JAMES L. BARR
4/8/12

LOCATION: HWY. 67/MAIN ST. INTERCHANGE
CITY: JACKSONVILLE
COUNTY: PULASKI
DISTRICT: 6 DRAWN BY: F&H

t061276.qty.dgn 4/8/2014 11:33:18 AM

DATE REVISED	DATE FILMED	DATE REVISED	X DATE FILMED	FED.RD. DIST.NO.	STATE	FED.AID PROJ.NO.	SHEET NO.	TOTAL SHEETS
				6	ARK.			
				JOB NO.		061276	165	438

(2) SYSTEM MAP

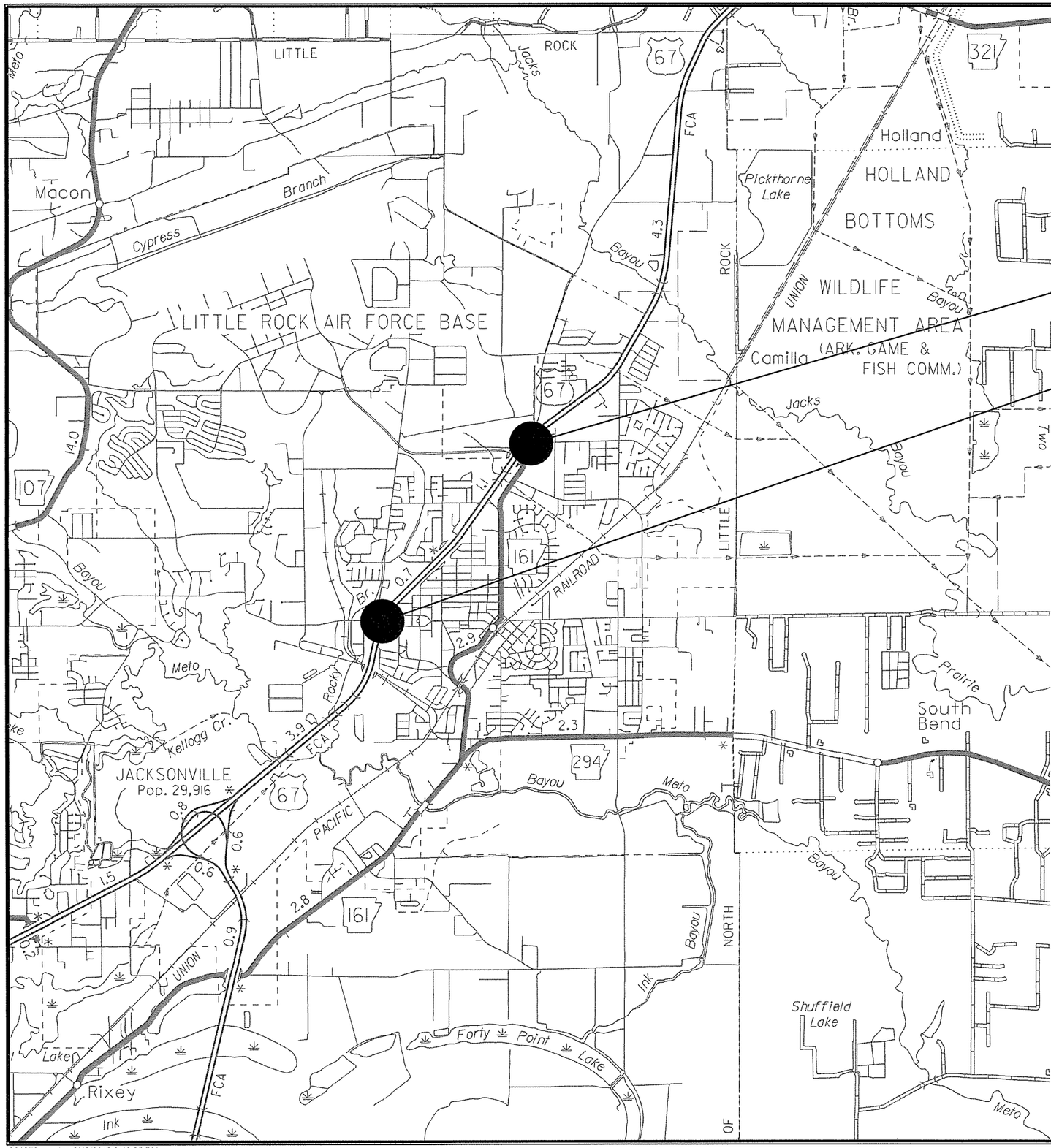

T.P. WHITE DR. & MADDEN DR.
(MASTER CONTROLLER)

HWY. 67/MAIN ST. INTERCHANGE

SCALE IN FEET
0 2500 5000 10000

STATE OF ARKANSAS
REGISTERED PROFESSIONAL ENGINEER
No. 9808
JAMES L. BARR
8/20/13

LOCATION:	HWY. 67/MAIN ST. INTERCHANGE
CITY:	JACKSONVILLE
COUNTY:	PULASKI
DISTRICT:	6
DRAWN BY:	F&H

t061276.sys.dgn 8/19/2013 2:18:35 PM

DATE REVISED	DATE FILMED	DATE REVISED	DATE FILMED	FED.RD. DIST.NO.	STATE	FED.AID PROJ.NO.	SHEET NO.	TOTAL SHEETS
				6	ARK.			
				JOB NO.		061276	166	438

(2) SIGNALIZATION PLAN SHEET

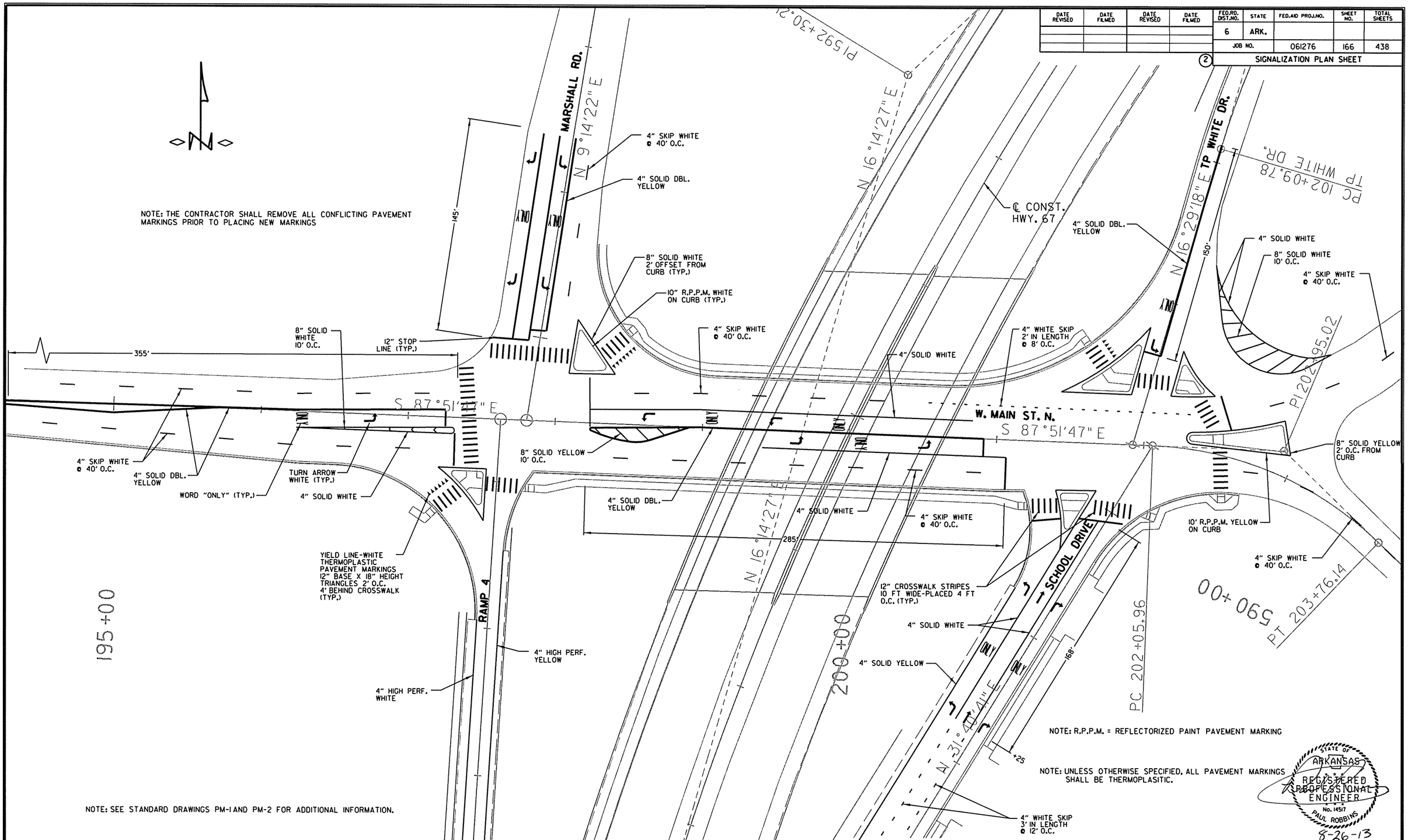

NOTE: R.P.P.M. = REFLECTORIZED PAINT PAVEMENT MARKING

NOTE: UNLESS OTHERWISE SPECIFIED, ALL PAVEMENT MARKINGS SHALL BE THERMOPLASITIC.

NOTE: SEE STANDARD DRAWINGS PM-1 AND PM-2 FOR ADDITIONAL INFORMATION.

STATE OF ARKANSAS REGISTERED PROFESSIONAL ENGINEER No. 14517 PAUL ROBBINS 8-26-13

SCALE IN FEET
0 30 60 120

LOCATION:	HWY. 67/MAIN ST. INTERCHANGE
CITY:	JACKSONVILLE
COUNTY:	PULASKI
DISTRICT:	6
DRAWN BY:	F&H

t061276.pmt.dgn 8/26/2013 10:06:39 AM

DATE REVISED	DATE FILMED	DATE REVISED	X DATE FILMED

FED.RD. DIST.NO.	STATE	FED.AID PROJ.NO.	SHEET NO.	TOTAL SHEETS
6	ARK.			
JOB NO.		061276	167	438

(2) SIGNALIZATION PLAN SHEET

POLE CHART

	POLE	MAST ARM(S) LENGTH	MAST ARM'S ORIENTATION ANGLE FROM HAND HOLE (CLOCKWISE)	VERTICAL SHAFT LENGTH	LUM. ARM LENGTH	LUM. ARM'S ORIENTATION ANGLE FROM HAND HOLE (CLOCKWISE)	MAIN ST. STATION	NORTHING EASTING
*	A	N/A	N/A	15'-0"	N/A	N/A	STA. 198+18.67 52.57' LT.	N 194491.9804 E 1273799.6620
*	B	46' 34'	180 DEGREES 90 DEGREES	21'-0"	N/A	N/A	STA. 197+89.67 42.00' RT.	N 194398.5551 E 1273767.1590
*	C	N/A	N/A	15'-0"	N/A	N/A	STA. 197+51.05 53.22' RT.	N 194388.7861S E 1273728.1443
*	D	42'	180 DEGREES	35'-0"	10'	270 DEGREES	STA. 197+17.75 38.96' LT.	N 194482.1433 E 1273698.3074
*	E	N/A	N/A	15'-0"	N/A	N/A	STA. 197+34.62 52.66' LT.	N 194495.2018 E 1273715.6789

* EXISTING POLE & MAST ARM TO BE RETAINED

NOTE:
THE EXISTING SIGNAL IS TO BE MAINTAINED UNTIL SUCH TIME AS THE NEW SIGNAL EQUIPMENT CAN BE PLACED INTO OPERATION. FLAGGING OPERATION MUST BE UTILIZED IF THE SIGNAL IS OFF FOR ANY PERIOD OF TIME DURING CONSTRUCTION ACTIVITIES.

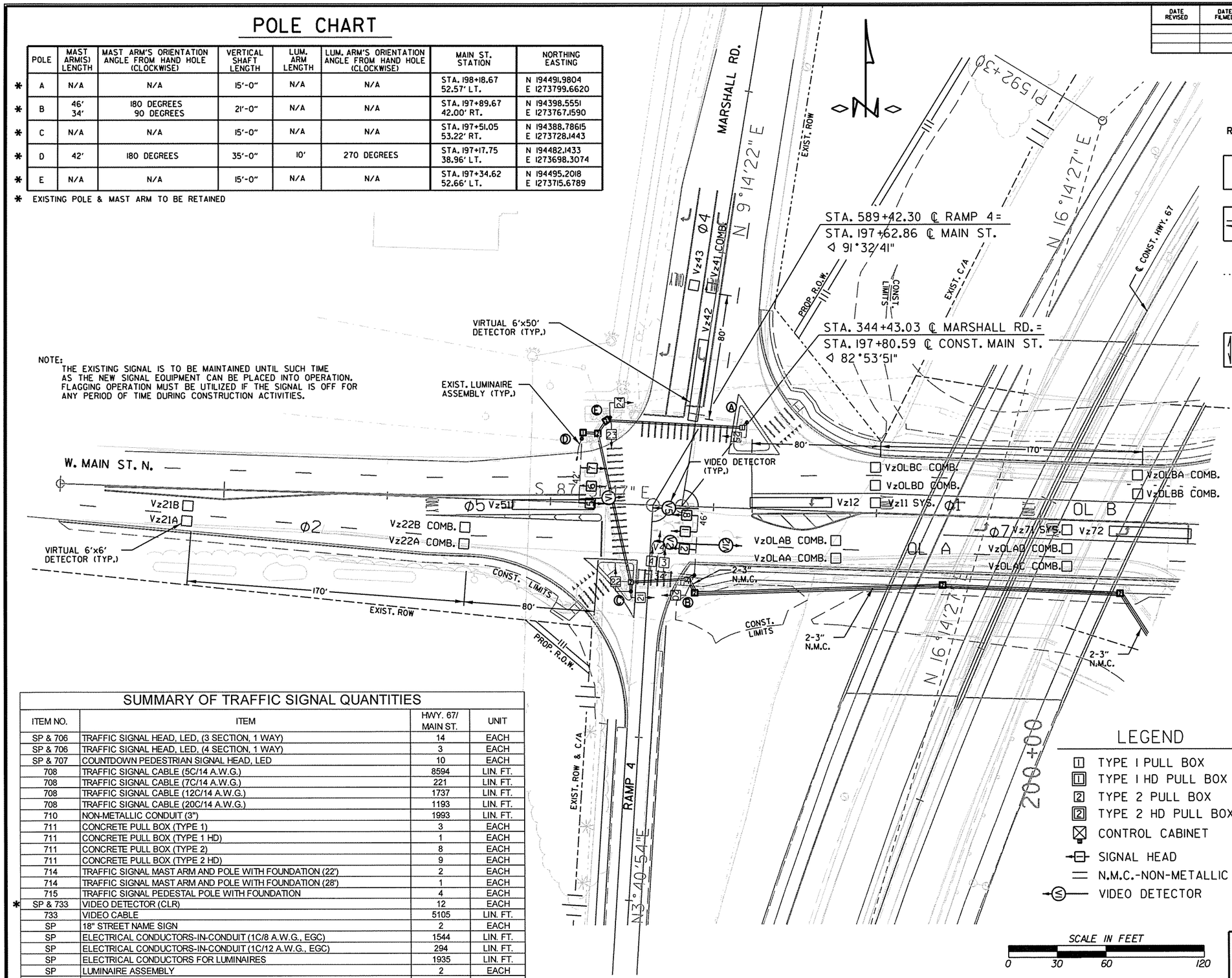

PHASING DIAGRAM

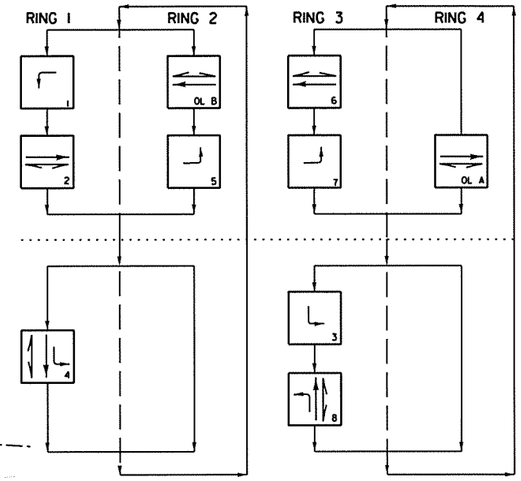

LED SIGNAL FACES

12" LENSES

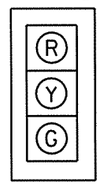

*1,2,6,&7

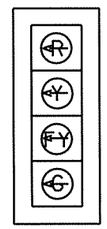

*5,8

EXIST. LED SIGNAL FACES

12" LENSES (RETAIN)

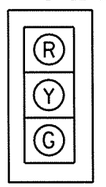

*3,4

ONE SECTION (SOLID SYMBOL)

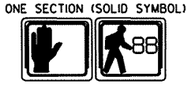

*20-25

LEGEND

- TYPE I PULL BOX
- TYPE I HD PULL BOX
- TYPE 2 PULL BOX
- TYPE 2 HD PULL BOX
- CONTROL CABINET
- SIGNAL HEAD
- N.M.C.-NON-METALLIC CONDUIT
- VIDEO DETECTOR

SCALE IN FEET
0 30 60 120

SUMMARY OF TRAFFIC SIGNAL QUANTITIES

	ITEM NO.	ITEM	HWY. 67/ MAIN ST.	UNIT
	SP & 706	TRAFFIC SIGNAL HEAD, LED, (3 SECTION, 1 WAY)	14	EACH
	SP & 706	TRAFFIC SIGNAL HEAD, LED, (4 SECTION, 1 WAY)	3	EACH
	SP & 707	COUNTDOWN PEDESTRIAN SIGNAL HEAD, LED	10	EACH
	708	TRAFFIC SIGNAL CABLE (5C/14 A.W.G.)	8594	LIN. FT.
	708	TRAFFIC SIGNAL CABLE (7C/14 A.W.G.)	221	LIN. FT.
	708	TRAFFIC SIGNAL CABLE (12C/14 A.W.G.)	1737	LIN. FT.
	708	TRAFFIC SIGNAL CABLE (20C/14 A.W.G.)	1193	LIN. FT.
	710	NON-METALLIC CONDUIT (3")	1993	LIN. FT.
	711	CONCRETE PULL BOX (TYPE 1)	3	EACH
	711	CONCRETE PULL BOX (TYPE 1 HD)	1	EACH
	711	CONCRETE PULL BOX (TYPE 2)	8	EACH
	711	CONCRETE PULL BOX (TYPE 2 HD)	9	EACH
	714	TRAFFIC SIGNAL MAST ARM AND POLE WITH FOUNDATION (22')	2	EACH
	714	TRAFFIC SIGNAL MAST ARM AND POLE WITH FOUNDATION (28')	1	EACH
	715	TRAFFIC SIGNAL PEDESTAL POLE WITH FOUNDATION	4	EACH
*	SP & 733	VIDEO DETECTOR (CLR)	12	EACH
	733	VIDEO CABLE	5105	LIN. FT.
	SP	18" STREET NAME SIGN	2	EACH
	SP	ELECTRICAL CONDUCTORS-IN-CONDUIT (1C/8 A.W.G., EGC)	1544	LIN. FT.
	SP	ELECTRICAL CONDUCTORS-IN-CONDUIT (1C/12 A.W.G., EGC)	294	LIN. FT.
	SP	ELECTRICAL CONDUCTORS FOR LUMINAIRES	1935	LIN. FT.
	SP	LUMINAIRE ASSEMBLY	2	EACH
	SP	TRAFFIC SIGNAL CONTROLLER (MODIFICATION)	1	EACH

* ONE ADDITIONAL VIDEO DETECTOR INCLUDED FOR FUTURE NEEDS.

STATE OF ARKANSAS
REGISTERED PROFESSIONAL ENGINEER
No. 9808
JAMES L. BARR
4/8/14

LOCATION:	HWY. 67/MAIN ST. INTERCHANGE
CITY:	JACKSONVILLE
COUNTY:	PULASKI
DISTRICT:	6
DRAWN BY:	F&H

t061276.p01.dgn 4/8/2014 11:33:38 AM

POLE CHART

	POLE	MAST ARM(S) LENGTH	MAST ARM'S ORIENTATION ANGLE FROM HAND HOLE (CLOCKWISE)	VERTICAL SHAFT LENGTH	LUM. ARM LENGTH	LUM. ARM'S ORIENTATION ANGLE FROM HAND HOLE (CLOCKWISE)	MAIN ST. STATION	NORTHING EASTING
*	F	34'	180 DEGREES	35'-0"	15'-0"	180 DEGREES	STA. 201+71.49 41.84' LT.	N 194468.1016 E 1274151.8350
	G	22'	270 DEGREES	35'-0"	15'-0"	270 DEGREES	STA. 202+22.54 47.70' LT.	N 194471.2198 E 1274206.4084
	H	N/A	N/A	15'-0"	N/A	N/A	STA. 202+53.60 10.78' LT.	N 194428.8776 E 1274234.3948
	I	N/A	N/A	15'-0"	N/A	N/A	STA. 202+66.24 29.28' RT.	N 194387.0471 E 1274235.4889
*	J	46'	180 DEGREES	35'-0"	15'-0"	180 DEGREES	STA. 202+35.75 39.48' RT.	N 194383.0595 E 1274207.8713
	K	N/A	N/A	15'-0"	N/A	N/A	STA. 202+10.53 53.47' RT.	N 194371.4045 E 1274186.2504
	L	28'	180 DEGREES	35'-0"	15'-0"	180 DEGREES	STA. 201+52.37 48.17' RT.	N 194378.8644 E 1274129.3723
	M	N/A	N/A	15'-0"	N/A	N/A	STA. 201+19.39 48.46' RT.	N 194379.8087 E 1274096.4102
	N	22'	270 DEGREES	21'-0"	N/A	N/A	STA. 201+34.98 59.26' LT.	N 194486.8766 E 1274116.0023

* EXISTING POLE & MAST ARM TO BE RETAINED

DATE REVISED	DATE FILMED	DATE REVISED	DATE FILMED	FED.RD. DIST.NO.	STATE	FED.AID PROJ.NO.	SHEET NO.	TOTAL SHEETS
				6	ARK.			
				JOB NO.		061276	168	438

(2) SIGNALIZATION PLAN SHEET

LEGEND

- TYPE I PULL BOX
- TYPE I HD PULL BOX
- TYPE 2 PULL BOX
- TYPE 2 HD PULL BOX
- CONTROL CABINET
- SIGNAL HEAD
- N.M.C.-NON-METALLIC CONDUIT
- VIDEO DETECTOR

PHASING DIAGRAM

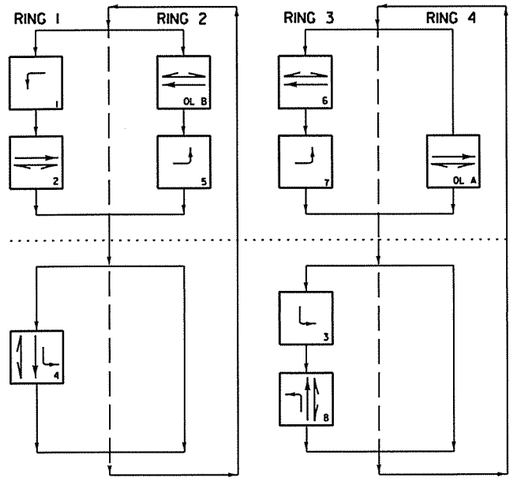

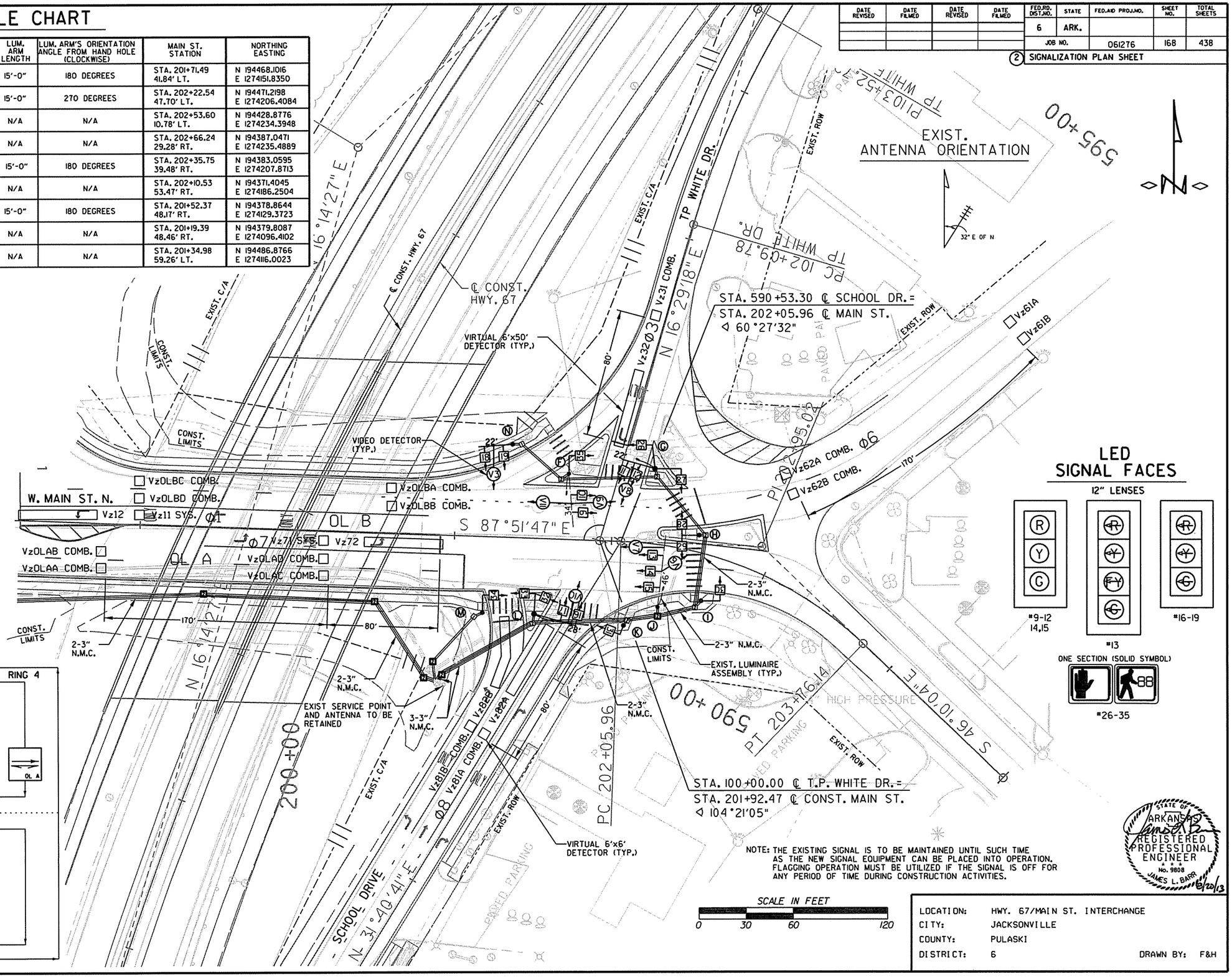

LED SIGNAL FACES

12" LENSES

NOTE: THE EXISTING SIGNAL IS TO BE MAINTAINED UNTIL SUCH TIME AS THE NEW SIGNAL EQUIPMENT CAN BE PLACED INTO OPERATION. FLAGGING OPERATION MUST BE UTILIZED IF THE SIGNAL IS OFF FOR ANY PERIOD OF TIME DURING CONSTRUCTION ACTIVITIES.

SCALE IN FEET
0 30 60 120

STATE OF ARKANSAS
JAMES L. BARR
REGISTERED PROFESSIONAL ENGINEER
No. 9808
8/20/13

LOCATION:	HWY. 67/MAIN ST. INTERCHANGE
CITY:	JACKSONVILLE
COUNTY:	PULASKI
DISTRICT:	6
DRAWN BY:	F&H

DATE REVISED	DATE FILMED	DATE REVISED	DATE FILMED	FED.RD. DIST.NO.	STATE	FED.AID PROJ.NO.	SHEET NO.	TOTAL SHEETS
				6	ARK.			
				JOB NO.		061276	169	438

(2) SIGNALIZATION PLAN SHEET

TRAFFIC FLOW DIAGRAM

LEGEND:
100 - AM PEAK
(100) - PM PEAK

EXISTING (2011) PEAK HOUR TRAFFIC VOLUMES

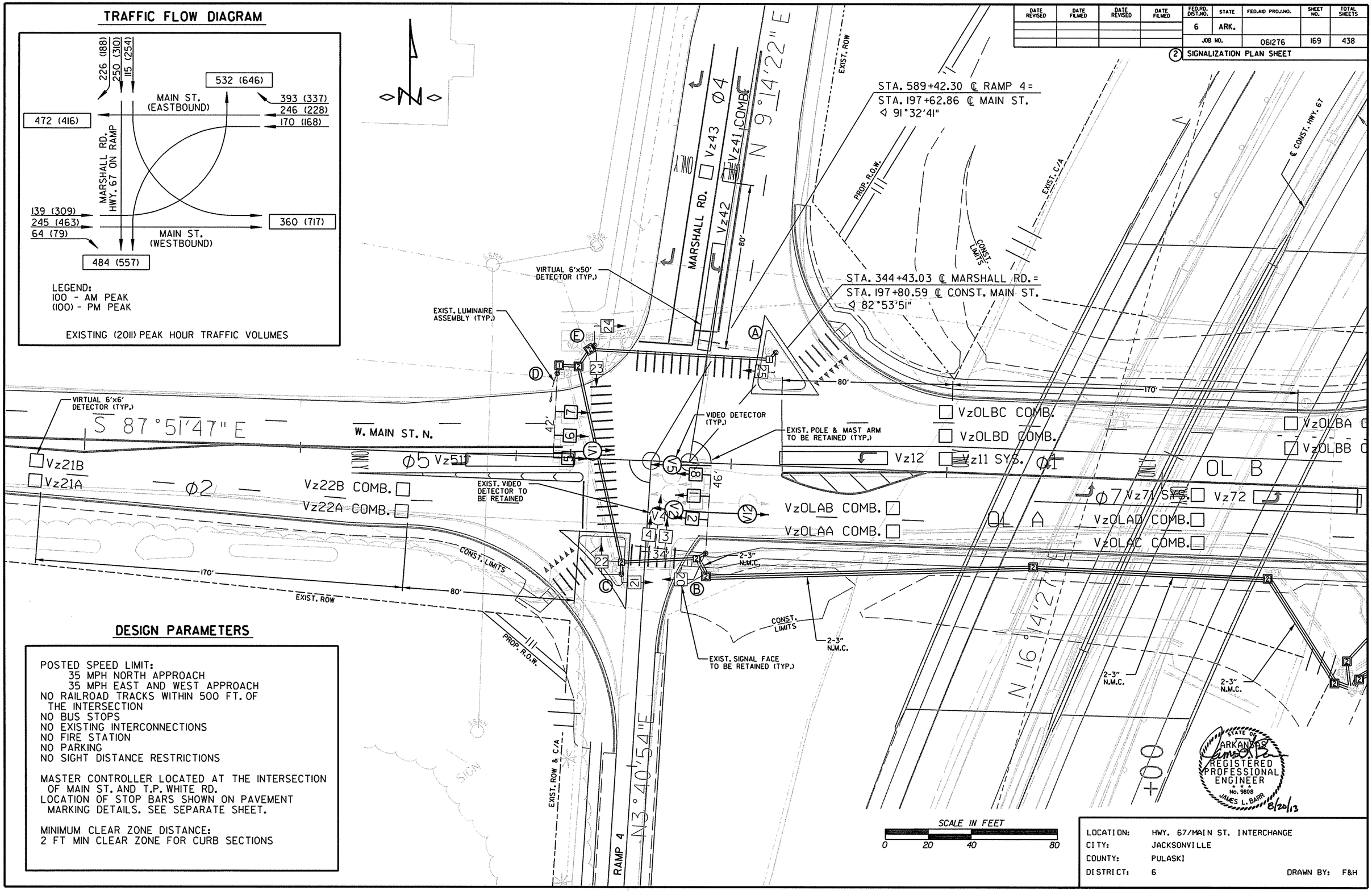

DESIGN PARAMETERS

POSTED SPEED LIMIT:
35 MPH NORTH APPROACH
35 MPH EAST AND WEST APPROACH
NO RAILROAD TRACKS WITHIN 500 FT. OF THE INTERSECTION
NO BUS STOPS
NO EXISTING INTERCONNECTIONS
NO FIRE STATION
NO PARKING
NO SIGHT DISTANCE RESTRICTIONS

MASTER CONTROLLER LOCATED AT THE INTERSECTION OF MAIN ST. AND T.P. WHITE RD.
LOCATION OF STOP BARS SHOWN ON PAVEMENT MARKING DETAILS. SEE SEPARATE SHEET.

MINIMUM CLEAR ZONE DISTANCE:
2 FT MIN CLEAR ZONE FOR CURB SECTIONS

STATE OF ARKANSAS REGISTERED PROFESSIONAL ENGINEER No. 9808 JAMES L. BARR 8/20/13

LOCATION:	HWY. 67/MAIN ST. INTERCHANGE
CITY:	JACKSONVILLE
COUNTY:	PULASKI
DISTRICT:	6
DRAWN BY:	F&H

TRAFFIC FLOW DIAGRAM

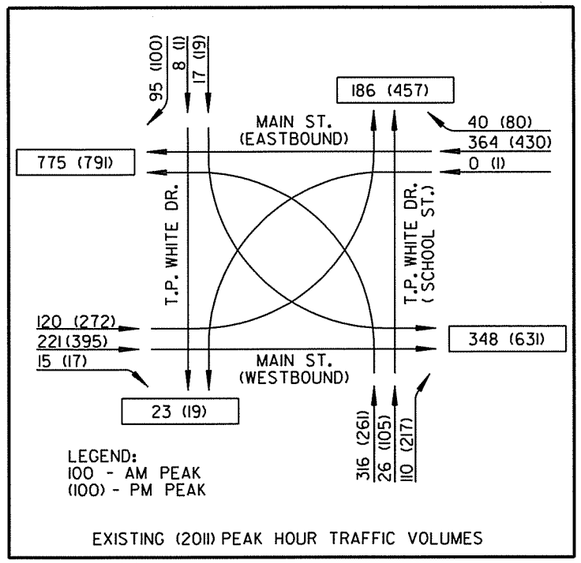

EXISTING (2011) PEAK HOUR TRAFFIC VOLUMES

DESIGN PARAMETERS

POSTED SPEED LIMIT:
35 MPH NORTH APPROACH
35 MPH EAST AND WEST APPROACH
NO RAILROAD TRACKS WITHIN 500 FT. OF THE INTERSECTION
NO BUS STOPS
NO EXISTING INTERCONNECTIONS
NO FIRE STATION
NO PARKING
NO SIGHT DISTANCE RESTRICTIONS

MASTER CONTROLLER LOCATED AT THE INTERSECTION OF MAIN ST. AND T.P. WHITE RD.
LOCATION OF STOP BARS SHOWN ON PAVEMENT MARKING DETAILS. SEE SEPARATE SHEET.

MINIMUM CLEAR ZONE DISTANCE:
2 FT MIN CLEAR ZONE FOR CURB SECTIONS

DATE REVISED	DATE FILMED	DATE REVISED	DATE FILMED	FED.RD. DIST.NO.	STATE	FED.AID PROJ.NO.	SHEET NO.	TOTAL SHEETS
				6	ARK.			
				JOB NO.		061276	170	438

(2) SIGNALIZATION PLAN SHEET

N 16°14'27" E

℄ CONST. HWY. 67

EXIST. C/A

N 16°29'18" E

Vz32Ø3 Vz31 COMB. TP WHITE DR.

EXIST. ROW

STA. 590+53.30 ℄ SCHOOL DR. =
STA. 202+05.96 ℄ MAIN ST.
Δ 60°27'32"

PAVED PARKING

EXIST. ROW

Vz61A

Vz61B

80'

LUMINAIRE ASSEMBLY (TYP.)

CONST. LIMITS

22'

Vz62A COMB. Ø6

Vz62B COMB.

170'

PI 202+95.02

VzOLBC COMB.

VzOLBD COMB.

VzOLBA COMB.

VzOLBB COMB.

VIDEO DETECTOR (TYP.)

W. MAIN ST. N.

Vz12

Vz11 SYS. Ø1

OL B

S 87°51'47" E

Ø7 Vz71 SYS.

Vz72

VIRTUAL 6'x6' DETECTOR (TYP.)

LAB COMB.

LAA COMB.

OL A

VzOLAD COMB.

VzOLAC COMB.

2-3" N.M.C.

EXIST. POLE & MAST ARM TO BE RETAINED

46'

CONST. LIMITS

170'

80'

28'

EXIST. POLE & MAST ARM TO BE RETAINED

EXIST. LUMINAIRE ASSEMBLY (TYP.)

EXIST. SERVICE POINT AND ANTENNA TO BE RETAINED

3-3" N.M.C.

Vz81B COMB.

Vz81A COMB.

Vz82B

Vz82A

SCHOOL DRIVE

80'

EXIST. C/A

EXIST. ROW

PC 202+05.96

200+00

590+06

PT 203+76.14

S 46°10'04" E

STA. 100+00.00 ℄ T.P. WHITE DR. =
STA. 201+92.47 ℄ CONST. MAIN ST.
Δ 104°21'05"

SCALE IN FEET
0 20 40 80

STATE OF ARKANSAS
REGISTERED PROFESSIONAL ENGINEER
No. 9808
JAMES L. BARR
8/20/13

LOCATION:	HWY. 67/MAIN ST. INTERCHANGE
CITY:	JACKSONVILLE
COUNTY:	PULASKI
DISTRICT:	6
DRAWN BY:	F&H

DATE REVISED	DATE FILMED	DATE REVISED	DATE FILMED	FED.RD. DIST.NO.	STATE	FED.AID PROJ.NO.	SHEET NO.	TOTAL SHEETS
				6	ARK.			
				JOB NO.		061276	171	438
				(2)	SIGNALIZATION PLAN SHEET			

DETECTOR CHART

DETECTOR I.D. NUMBER	DIRECTION & LOCATION	TYPE	DET. NUM.	HARDWARE INPUTS: CAB. TER. NUM.	HARDWARE INPUTS: AMP. CHN. NUM.	HARDWARE INPUTS: CON. INP. NUM.	PROGRAM ASSIGNMENTS: LOCAL PHS.	PROGRAM ASSIGNMENTS: LOCAL SYS. DET.	PROGRAM ASSIGNMENTS: MSTR. SYS. DET.	COMMENT	TUBE LENGTH
Vz11	WB LT ADV	SYS.		-	1	D1	1	1	-	VIDEO 1	23'
Vz12	WB LT PRES	LOCAL		-	2	V1	1		-	VIDEO 1	23'
Vz21A&B	EB ADV	LOCAL		-	5	V2	2		-	VIDEO 2	23'
Vz22A&B	EB NEAR	COMB.		-	6	D2	2	2	-	VIDEO 5	23'
Vz31	SB ADV	COMB.		-	17	D3	3	3	-	VIDEO 10	23'
Vz32	SB PRES	LOCAL		-	18	V3	3		-	VIDEO 10	23'
Vz41	SB LT ADV	COMB.		-	9	D4	4	4	-	VIDEO 4	23'
Vz42	SB LT PRES	LOCAL		-	10	P7	4			VIDEO 4	23'
Vz43	SB NEAR	LOCAL		-	11	V4	4		-	VIDEO 4	23'
Vz51	EB LT PRES	LOCAL		-	7	V5	5		-	VIDEO 5	23'
Vz61A&B	WB ADV	LOCAL		-	13	V6	6		-	VIDEO 6	37'
Vz62A&B	WB NEAR	COMB.		-	14	D6	6	6	-	VIDEO 9	23'
Vz71	EB LT ADV	SYS.		-	19	D7	7	7	-	VIDEO 7	23'
Vz72	EB LT PRES	LOCAL		-	20	V7	7		-	VIDEO 7	23'
Vz81 A&B	NB ADV	COMB.		-	21	D8	8	8	-	VIDEO 3	23'
Vz82 A&B	NB PRES	LOCAL		-	22	V8	8		-	VIDEO 8	23'
VzOLA A,B,C,D	EB ADV & NEAR	COMB.		-	12	P5	OLA		-	VIDEO 12	23'
VzOLB A,B,C,D	WB ADV & NEAR	COMB.		-	3	D5	OLB	5	-	VIDEO 11	23'
PB1	NW TO NE	PED.		-	-	P1	1		-	MARSHALL RD.	
PB2	SW TO SE	PED.		-	-	P2	2		-	RAMP 4	
PB3	SW TO NW	PED.		-	-	P3	3		-	MAIN ST.	
PB4	SW TO SE	PED.		-	-	P4	4		-	SCHOOL DR.	
PB6	NW TO NE	PED.		-	-	P6	6		-	T.P.WHITE DR.	
PB8	SE TO NE	PED.		-	-	P8	8		-	MAIN ST.	

CONTROLLER INPUT ABBREVIATIONS:
V - VEHICLE INPUT
D - SYSTEM OR AUXILIARY INPUT
P - PEDESTRIAN INPUT

AMP.CHN.NUM.NOT USED: 4,8,15,16

NOTE: "AMP.CHN." REFERS TO THE DETECTOR RACK OUTPUT POSITION AND IS WIRED TO THE CONTROLLER INPUT DETECTOR NUMBER THAT IS PROGRAMMED TO ACTIVATE THE DESIGNATED PHASE.

NOTES:

1. A SEPARATE 5c/#14 AWG SHALL BE PROVIDED FROM EACH 3 SECTION HEAD TO THE BASE OF POLE.
2. A SEPARATE 5c/#14 AWG SHALL BE PROVIDED TO EACH POLE WITH PEDESTRIAN PUSH BUTTONS.
3. ALL DETECTOR RACK CHANNELS, INCLUDING UNUSED, SHALL BE BROUGHT TO TERMINAL STRIP IN DETECTOR AREA ON CABINET.
4. THE LOCAL GOVERNMENT SHALL BE RESPONSIBLE FOR PROVIDING POWER TO THE SERVICE POINT.

WIRING DIAGRAM

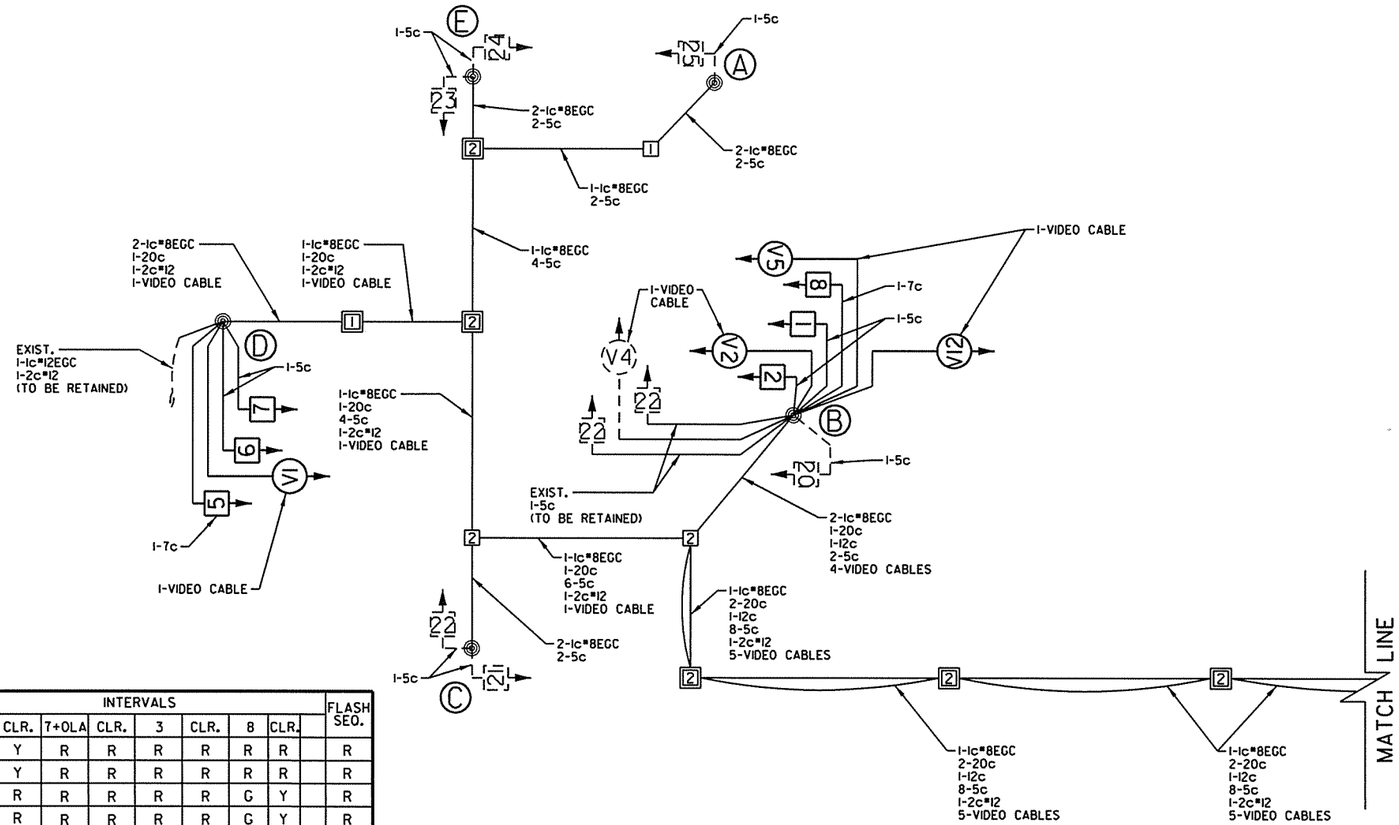

INTERVAL CHART

SIGNAL FACES	INTERVALS: 1+5	CLR.	1+OLB	CLR.	2+5	CLR.	2+OLB	CLR.	4	CLR.		FLASH SEQ.
1	R	R	R	R	G	*	G	*	R	R		R
2	R	R	R	R	G	*	G	*	R	R		R
3	R	R	R	R	R	R	R	R	G	Y		R
4	R	R	R	R	R	R	R	R	G	Y		R
5	~~G~~	***	~~G~~	***	~~R~~	~~R~~	~~FY~~	***	~~R~~	~~R~~		~~R~~
6	R	R	G	**	R	R	G	**	R	R		R
7	R	R	G	**	R	R	G	**	R	R		R
8	~~G~~	***	~~R~~	~~R~~	~~G~~	***	~~FY~~	***	~~R~~	~~R~~		~~R~~
20-21	W	▲	DW	DW	W	▲	W	▲	DW	DW		BLANK
22-23	DW	DW	DW	DW	DW	DW	DW	DW	W	FDW		BLANK
24-25	DW	DW	DW	DW	DW	DW	W	▲	DW	DW		BLANK

SIGNAL FACES	INTERVALS: 6+OLA	CLR.	7+OLA	CLR.	3	CLR.	8	CLR.		FLASH SEQ.
9	G	Y	R	R	R	R	R	R		R
10	G	Y	R	R	R	R	R	R		R
11	R	R	R	R	R	R	G	Y		R
12	R	R	R	R	R	R	G	Y		R
13	~~FY~~	***	~~G~~	***	~~R~~	~~R~~	~~R~~	~~R~~		~~R~~
14	G	**	G	**	R	R	R	R		R
15	G	**	G	**	R	R	R	R		R
16	~~R~~	~~R~~	~~R~~	~~R~~	~~G~~	~~Y~~	~~R~~	~~R~~		~~R~~
17	~~R~~	~~R~~	~~R~~	~~R~~	~~G~~	~~Y~~	~~R~~	~~R~~		~~R~~
18	~~R~~	~~R~~	~~R~~	~~R~~	~~R~~	~~R~~	~~G~~	~~Y~~		~~R~~
19	~~R~~	~~R~~	~~R~~	~~R~~	~~R~~	~~R~~	~~G~~	~~Y~~		~~R~~
26,35	W	FDW	DW	DW	DW	DW	DW	DW		BLANK
27-30	DW	DW	DW	DW	W	▲	W	▲		BLANK
31-34	W	▲	W	▲	DW	DW	DW	DW		BLANK

* DENOTES GREEN OR YELLOW ARROW DEPENDING ON NEXT PHASE
** DENOTES GREEN OR YELLOW BALL DEPENDING ON NEXT PHASE
*** DENOTES FLASHING YELLOW ARROW OR YELLOW ARROW DEPENDING ON NEXT PHASE
▲ DENOTES WALK OR FLASHING DON'T WALK DEPENDING ON NEXT PHASE

STATE OF ARKANSAS
REGISTERED PROFESSIONAL ENGINEER
No. 9808
JAMES L. BARR
5/22/13

LOCATION:	HWY. 67/MAIN ST. INTERCHANGE
CITY:	JACKSONVILLE
COUNTY:	PULASKI
DISTRICT:	6
DRAWN BY:	F&H

DATE REVISED	DATE FILMED	DATE REVISED	DATE FILMED	FED.RD. DIST.NO.	STATE	FED.AID PROJ.NO.	SHEET NO.	TOTAL SHEETS
				6	ARK.			
				JOB NO.		061276	172	438

(2) SIGNALIZATION PLAN SHEET

WIRING DIAGRAM

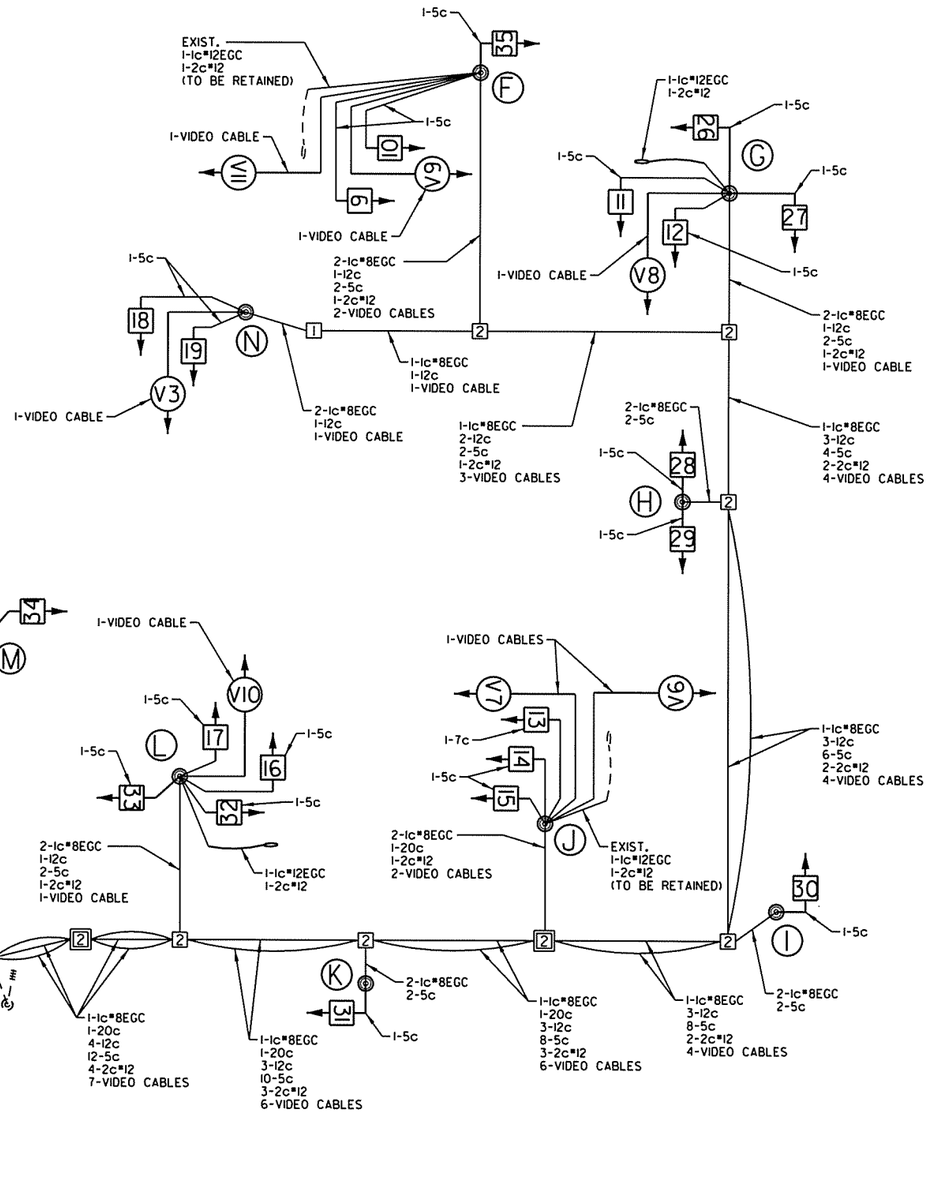

EXIST. SIGN TO BE REMOVED

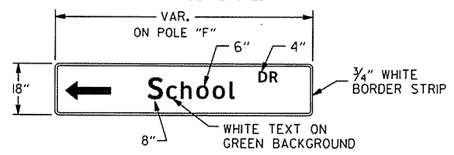

EXIST. SIGN TO BE RETAINED

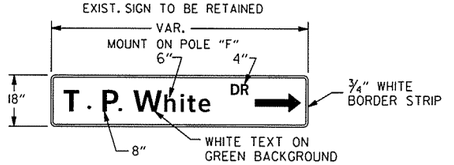

EXIST. SIGN TO BE REMOVED

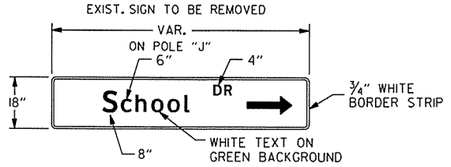

EXIST. SIGN TO BE RETAINED

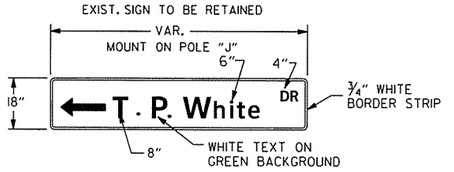

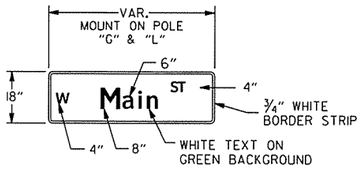

NOTE: RETAIN ALL EXIST. STREET NAME SIGNS ON POLES A-E.

NOTES:

1. REFLECTIVE SHEETING SHALL COMPLY WITH ASTM 4956 TYPE 9 REFLECTIVE SHEETING. SHEETING AND LEGEND SHALL BE APPLIED IN SUCH A MANNER TO PROVIDE WRINKLE AND BUBBLE FREE SURFACES. APPLICATION OF SHEETING IS CAUSE FOR REJECTION OF MATERIALS DUE TO WORKMANSHIP.

2. ALUMINUM SIGN BLANK SHALL BE ALLOY 6061-T6 OR 5052-H38. THE ALUMINUM SIGN SHALL ALSO BE ANODIZED. THE ALUMINUM SHEETING SHALL BE 0.100 INCH NOMINAL THICKNESS AND OF THE SIZE SHOWN WITH 1.5" CORNER RADII. PRIOR TO FABRICATION OF THE SIGNS, THE LAYOUT SHALL FIRST BE APPROVED BY AN AGENT OF THE CITY.

3. SEE STD. DETAIL SHEET FOR MORE INFORMATION FOR MOUNTING ON MAST ARM ASSEMBLY.

4. THE CLEARVIEW 5-W-R FONT SHALL BE USED FOR ALL LETTERS.



LOCATION:	HWY. 67/MAIN ST. INTERCHANGE
CITY:	JACKSONVILLE
COUNTY:	PULASKI
DISTRICT:	6

DRAWN BY: F&H

t061276.p01.dgn 8/20/2013 2:26:50 PM

DATE REVISED	DATE FILMED	DATE REVISED	DATE FILMED	FED.RD. DIST.NO.	STATE	FED.AID PROJ.NO.	SHEET NO.	TOTAL SHEETS
				6	ARK.			
				JOB NO.		061276	173	438

(2) TRAFFIC SIGNAL SPECIAL DETAILS

CONSTRUCT CONCRETE WALKS

STA. 197+02.92 TO STA. 197+17.73 RT. OF ℄ CONST. MAIN ST. = 8 SQ. YD.
STA. 345+70.00 RT. OF ℄ CONST. MARSHALL RD. TO STA. 100+67.00 LT. OF ℄ CONST. T.P. WHITE DR. = 217 SQ. YD.
STA. 588+67.00 RT. OF ℄ CONST. RAMP 4 - MAIN ST. TO STA. 589+24.00 LT. OF ℄ CONST. SCHOOL DR. = 250 SQ. YD.

CONCRETE COMBINATION CURB & GUTTER (TYPE A) (1'-6")

STA. 193+81.00 RT. OF ℄ CONST. MAIN ST. TO STA. 588+10.00 RAMP 4 - MAIN ST. = 440 LIN. FT.
STA. 345+70.00 RT. OF ℄ CONST. MARSHALL RD. TO STA. 101+70.00 LT. OF ℄ CONST. T.P. WHITE DR. = 510 LIN. FT.
STA. 588+67.00 RT. OF ℄ CONST. RAMP 4 - MAIN ST. TO STA. 589+24.00 LT. OF ℄ CONST. SCHOOL DR. = 450 LIN. FT.

STA. 197+17.31 ℄ CONST. MAIN ST. CONSTRUCT
TYPE 3 WHEELCHAIR RAMP ON RT.= 4 SQ. YDS.

STA. 197+85.24 ℄ CONST. MAIN ST. CONSTRUCT
TYPE 4 WHEELCHAIR RAMP ON RT.= 5 SQ. YDS.

STA. 198+50.40 ℄ CONST. MAIN ST. CONSTRUCT
TYPE 4 WHEELCHAIR RAMP ON LT.= 6 SQ. YDS.

MARSHALL RD.
N 9°14'22"E
PROP. R/W & C of A
EXIST. ROW
EXIST. ROW & C/A
STA. 344+43.03 ℄ MARSHALL RD.=
STA. 197+80.59 ℄ CONST. MAIN ST.
◁ 82°53'51"
CONST. LIMITS
5'
3'
R 85'
CONSTRUCT TYPE 4
WHEELCHAIR RAMP
S 87°51'47"E
MAIN ST.
70' F-F
C.L. CONST. HWY. 67
CONSTRUCT TYPE 3
WHEELCHAIR RAMP
7'
7'
7'
R 100'
R 100'
TRAFFIC
EXIST. ROW
STA. 589+42.30 ℄ RAMP 4=
STA. 197+62.86 ℄ CONST. MAIN ST.
◁ 91°32'41"
PROP. R/W & C of A
CONSTRUCT TYPE 3
WHEELCHAIR RAMP
RAMP 4 N 3°40'54"E
198+00
N 16°14'27"E
200+00
EXIST. ROW & C/A
SIGN
SSMH
STM
BM
CTL

SCALE IN FEET
0 15 30 60

STATE OF ARKANSAS
REGISTERED PROFESSIONAL ENGINEER
No. 9808
JAMES L. BARR
8/24/13

LOCATION: MAIN ST./SCHOOL DR./T.P. WHITE
CITY: JACKSONVILLE
COUNTY: PULASKI
DISTRICT: 6
DRAWN BY: F&H

t061276.sp2.dgn 8/19/2013 2:18:33 PM

DATE REVISED	DATE FILMED	DATE REVISED	DATE FILMED	FED.RD. DIST.NO.	STATE	FED.AID PROJ.NO.	SHEET NO.	TOTAL SHEETS
				6	ARK.			
				JOB NO.		061276	174	438

(2) TRAFFIC SIGNAL SPECIAL DETAILS

CONSTRUCT CONCRETE WALKS

STA. 577+64.17 RT. OF ℄ CONST. SCHOOL DRIVE TO STA. 202+74.00 RT. OF ℄ CONST. MAIN ST. = 616 SQ. YD.

INTERGRAL CURB (TYPE A) (1'-6")

STA. 577+64.17 RT. OF ℄ CONST. SCHOOL DRIVE TO STA. 202+74.00 RT. OF ℄ CONST. MAIN ST. = 1320 LIN. FT.

STA. 201+18.70 ℄ CONST. MAIN ST. CONSTRUCT TYPE 3 WHEELCHAIR RAMP ON RT.= 4 SQ. YDS.

STA. 201+58.13 ℄ CONST. MAIN ST. CONSTRUCT TYPE 3 WHEELCHAIR RAMP ON LT.= 4 SQ. YDS.

STA. 202+07.94 ℄ CONST. MAIN ST. CONSTRUCT TYPE 4 WHEELCHAIR RAMP ON RT.= 7 SQ. YDS.

STA. 202+61.07 ℄ CONST. MAIN ST. CONSTRUCT TYPE 4 WHEELCHAIR RAMP ON RT.= 8 SQ. YDS.

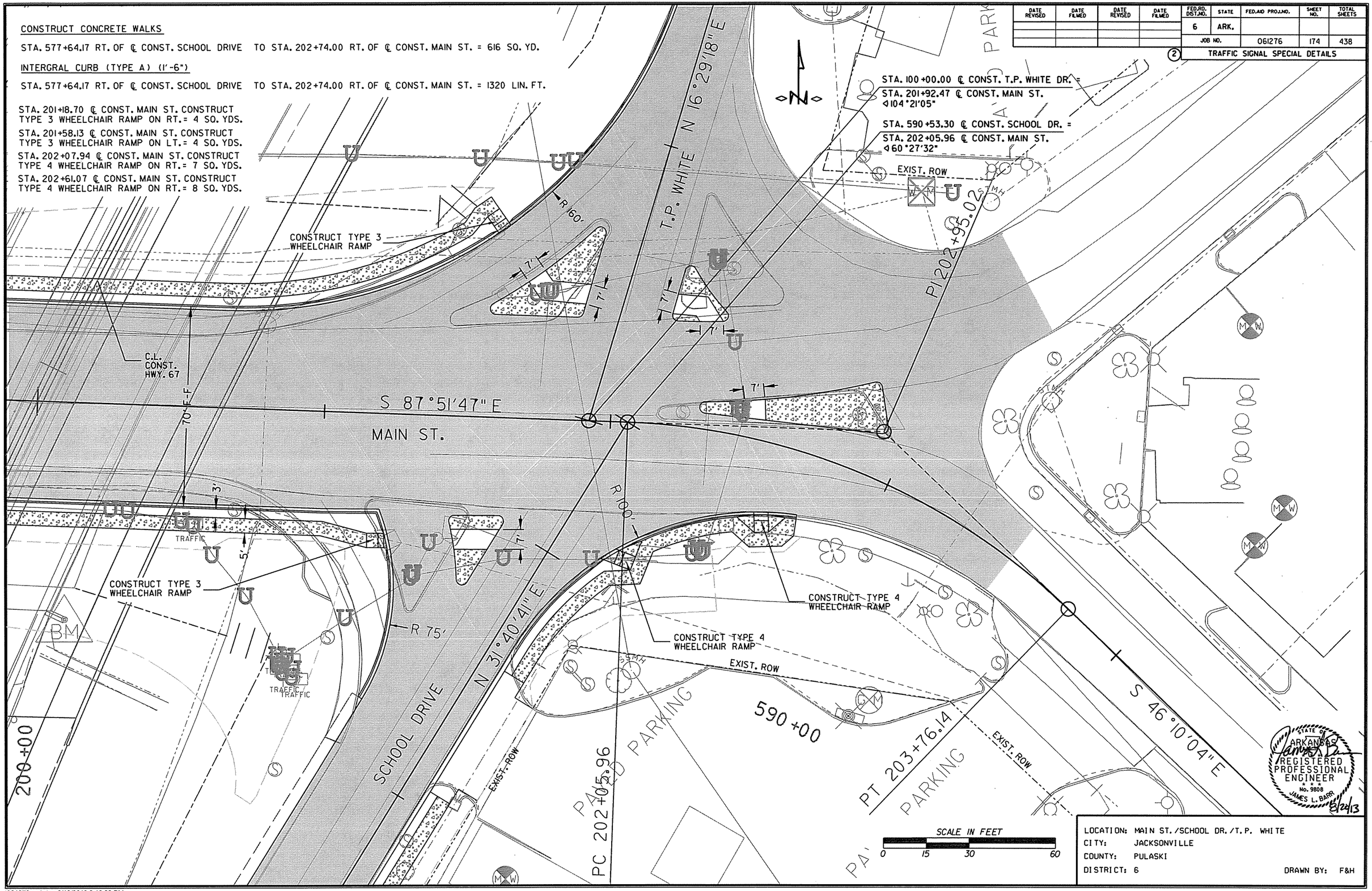

STATE OF ARKANSAS REGISTERED PROFESSIONAL ENGINEER No. 9808 JAMES L. BARR 8/20/13

LOCATION: MAIN ST./SCHOOL DR./T.P. WHITE
CITY: JACKSONVILLE
COUNTY: PULASKI
DISTRICT: 6
DRAWN BY: F&H

t061276.sp1.dgn 8/19/2013 2:18:32 PM

DATE REVISED	DATE FILMED	DATE REVISED	DATE FILMED	FED.RD. DIST.NO.	STATE	FED.AID PROJ.NO.	SHEET NO.	TOTAL SHEETS
				6	ARK.			
				JOB NO.		061276	175	438

(2) CULVERT DIAGRAMS

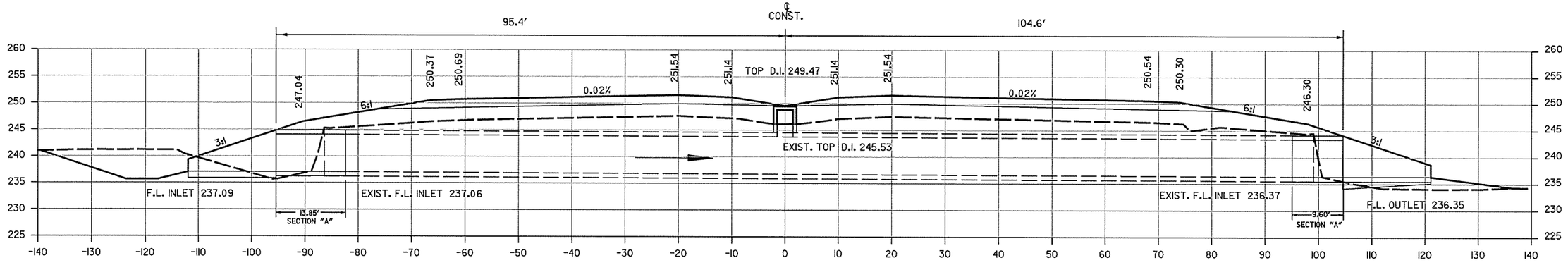

539+63.00

STA. 539+63 ℄ CONST.- IN PLACE
DBL. 10' X 7' X 188' R.C. BOX CULVERT
(SPAN 22.08')
W/DROP INLET IN MEDIAN
Q50 = 807 CFS, D.A. = 1.1 SQ. MI.
RETAIN & EXTEND R.C. BOX 14' LT. & 10' RT.
USE 3:1 WINGWALLS
ADJUST TYPE TM DROP INLET TO GRADE
(4'-0" x 3'-0" x H= 3'-11 1/4")

QUANTITIES - STA. 539+63

	SECTION	LENGTH	CLASS "S" CONCRETE-ROADWAY		REINFORCING STEEL - ROADWAY (GRADE 60)		UNCLASSIFIED EXCAVATION FOR STRUCTURES ROADWAY	SOLID SODDING	WATER	STANDARD DRAWING NO.
			PER LINEAR FOOT-BARREL	TOTAL	PER LINEAR FOOT-BARREL	TOTAL				
		FEET	CU. YD.		POUND		CU. YD.	S.Y.	M. GALLON	
	SECTION "A"	27.67	2.057	56.92	265.91	7357.73	44.23			R-200X-X2, RCB-1, RCB-2, RCB-3
	FOUR WINGS			22.37		1134.60		26.7	0.34	W-X003-1
	ADD. STEEL HW. & APRON					315.55				R-200X-X2
*	INLET BEVEL			(0.08)		(1.96)				
	TOTALS			79.21		8805.92	44.23	26.7	0.34	

BASIS OF ESTIMATE: WATER= 12.6 GAL. PER SQ.YD. SOLID SODDING
*(REDUCTION IN QUANTITY)

STATE OF ARKANSAS
REGISTERED PROFESSIONAL ENGINEER
No. 9808
JAMES L. BARR
12/5/13

CULVERT DIAGRAMS

DATE REVISED	DATE FILMED	DATE REVISED	DATE FILMED	FED.RD. DIST.NO.	STATE	FED.AID PROJ.NO.	SHEET NO.	TOTAL SHEETS
				6	ARK.			
				JOB NO.		061276	176	438
				(2)	CULVERT DIAGRAMS			

STA. 550+05 ℄ CONST. HWY. 67 CONSTRUCT
TYPE ST DROP INLET ALONG BARRIER WALL
3′-0" × 3′-0" × H= 5′-9" WITH 24" × 6′ R.C.
PIPE CULVERT. CONNECT TO DROP INLET ON RT.
(CLASS III) (TYPE 3 BEDDING)

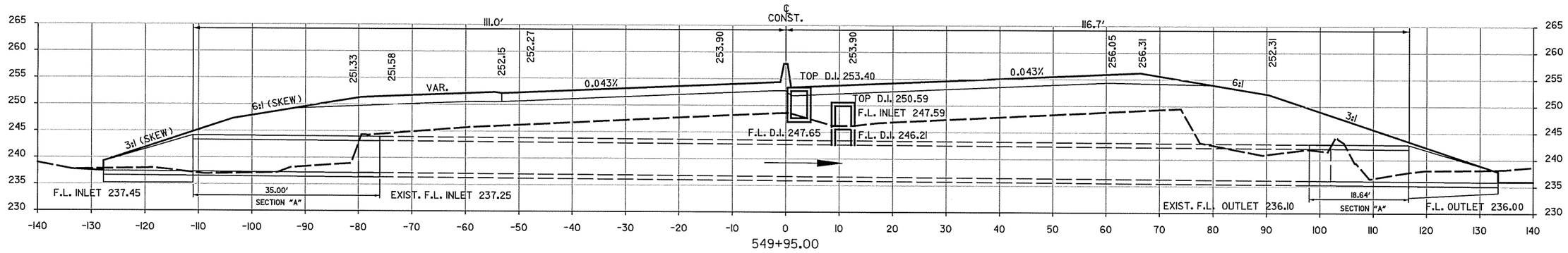

549+95.00

STA. 549+95 ℄ CONST.- IN PLACE
TRI. 10′ X 6′ X 186′ R.C. BOX CULVERT
(SPAN 32.92′)
W/DROP INLET IN MEDIAN-MODIFY DROP INLET
Q50 = 1210 CFS, D.A.= 1.6 SQ. MI.
RETAIN AND EXTEND 35′ LT. & 19′ RT.
USE 3:1 WINGWALLS

QUANTITIES - STA. 549+95

	SECTION	LENGTH	CLASS "S" CONCRETE-ROADWAY		REINFORCING STEEL - ROADWAY (GRADE 60)		UNCLASSIFIED EXCAVATION FOR STRUCTURES ROADWAY	SOLID SODDING	WATER	STANDARD DRAWING NO.
			PER LINEAR FOOT-BARREL	TOTAL	PER LINEAR FOOT-BARREL	TOTAL				
		FEET	CU. YD.		POUND		CU. YD.	S.Y.	M. GALLON	
	SECTION "A"	57.67	2.731	157.50	428.10	24688.53	82.44			R-300X-X2, RCB-1, RCB-2, RCB-3
	FOUR WINGS			20.77		583.10		29.5	0.37	W-X003-1
	LAP					101.87				R-300X-X2
	ADD. STEEL HW. & APRON					582.24				R-300X-X2
*	INLET BEVEL			(0.09)		(2.83)				
	TOTALS			178.18		25952.91	82.44	29.5	0.37	

BASIS OF ESTIMATE: WATER= 12.6 GAL. PER SQ.YD. SOLID SODDING
*(REDUCTION IN QUANTITY)

STATE OF ARKANSAS
REGISTERED PROFESSIONAL ENGINEER
No. 9808
JAMES L. BARR
12/5/13

CULVERT DIAGRAMS

For R/W Data, See Roadway Plans

See Dwg. No. 53628 for location and type of special approach slabs and special approach gutters.

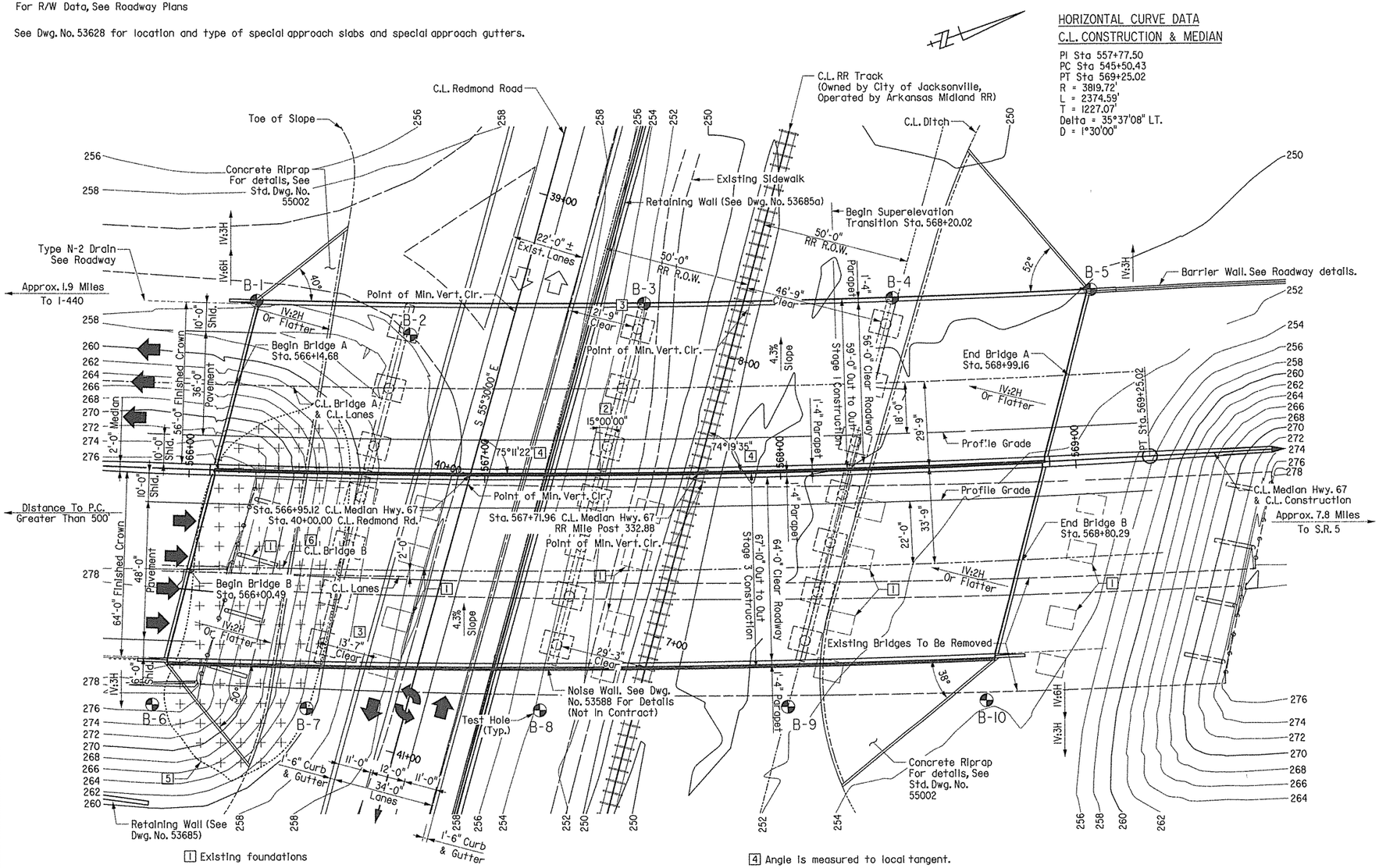

PLAN

1 Existing foundations

2 Skew is measured to a line which is parallel to a radial line through Station 567+71.96. All bents are parallel.

3 Horizontal clearances are measured to face of curb.

4 Angle is measured to local tangent.

5 Note: The Contractor shall excavate the existing slope as shown. Approximately 711 cu. yds. of excavation required. (This quantity is included in the Roadway earthwork quantity.)

For utility locations, superelevation transition detail, and Bridge B right gutter correction curve, see Dwg. No. 53584.

6 Located with respect to Clear Roadway.

DATE REVISED	DATE FILMED	DATE REVISED	DATE FILMED	FED. ROAD DIST. NO.	STATE	FED. AID PROJ. NO.	SHEET NO.	TOTAL SHEETS
				6	ARK.			
				JOB NO.		061276	177	438
				(1) A&B7282		LAYOUT		53582

GENERAL NOTES

BENCH MARK: Square cut in the east corner of the south end bent. Survey control point no. 971. N=192131.12, E=1273343.85, Elev. 278.31, Sta. 566+04.40, Offset 78.51' Right.

CONSTRUCTION SPECIFICATIONS: Arkansas State Highway and Transportation Department Standard Specifications for Highway Construction (2014 Edition) with applicable supplemental specifications and special provisions. Unless otherwise noted in the plans, section and subsection numbers refer to the Standard Construction Specifications.

DESIGN SPECIFICATIONS: AASHTO LRFD Bridge Design Specifications (2010, 5th Edition) with interim specifications.

LIVE LOADING: HL93

SEISMIC ZONE: 2 SI = 0.099, Fv = 2.4

MATERIALS AND STRENGTHS:

Class S(AE) Concrete (Superstructure)	f'c = 4,000 psi
Class S Concrete (Substructure)	f'c = 3,500 psi
Reinforcing Steel (AASHTO M 31 or M322 Type A, Gr. 60)	fy = 60,000 psi
Structural Steel (AASHTO M 270, Gr. 50)	Fy = 50,000 psi
Structural Steel (AASHTO M 270, Gr. 36)	Fy = 36,000 psi

BORING LOGS: Boring Logs may be obtained from the Programs and Contracts Division.

STEEL PILING: All piling shall be HP12x53 (Grade 50) and shall be driven with an approved air, steam, or diesel hammer to a Minimum Safe Bearing Capacity of 95 tons per pile. Piles for Bridge B, Bent 1 shall be driven into material designated as Gravel on the boring legend. All other piles shall be driven into material designated as shale or sandstone. Lengths shown are for estimating quantities and for use in determining payment for cut-off and build-up in accordance with the Standard Specifications. Piles in end bents to be driven after embankment to bottom of cap is in place. On all piles the Contractor shall use approved steel H-Pile driving points.

PILE FOOTINGS: The top of footings shall be set a minimum of 2'-0" below finished ground. Foundations for footings shall be prepared in accordance with Section 801.04 and backfilled in accordance with Section 801.08.

BRIDGE DECK: The concrete bridge deck shall be given a fine finish as specified for final finishing in Subsection 802.19 for Class S Tined Bridge Roadway Surface Finish.

CLASS I PROTECTIVE SURFACE TREATMENT: Class I Protective Surface Treatment shall be applied to the roadway surface and to the roadway face and top of the concrete parapet rail.

PAINT: All structural steel except galvanized members, some surfaces in contact with concrete, and as otherwise noted, shall be painted as specified in Subsection 807.75. The color of paint shall be Aluminum and shall match Fed Std. 595B, Color Chip No. 37200.

EXISTING BRIDGE: Each existing bridge (Bridge Nos. 03077 and A3077) is 33'-6" wide and 347'-2¾" long and consists of concrete deck on steel rolled beams supported by reinforced concrete columns and footings with concrete foundation piles. The existing bridge is located on the proposed alignment. Plans for existing bridge will be made available to the Contractor upon request to Programs and Contracts Division. Existing Dwg. Nos. 9280, 9284-9288.

REMOVAL AND SALVAGE: After Stage 2 construction is opened to traffic, the existing bridges (No. 03077 and A3077) shall be removed. Both bridges shall be removed in accordance with Section 205. All material from existing bridges shall become the property of the Contractor.

SHORING: Shoring will be required to remove exising bridges and construct embankment and new bridges. Location of shoring to be determined by the Contractor. Payment for and details and design of shoring will be in accordance with Special Provision Job No. 061276 "Shoring".

MAINTENANCE OF TRAFFIC: See Roadway Drawings.

DETAIL DRAWINGS:	DRAWING NOS.
End Bents	53589-53592, 53597-53599, 53611-53613, 53618-53620
Intermediate Bents	53593-53596, 53614-53617
280'-0" Cont. Comp. W-Beam Units	53600-53610, 53621-53625
Elastomeric Bearings	53627
Type Special Approach Gutters	53633-53635
Type "C" Approach Gutters	55030c
Type Special Approach Slabs	53629-53632
Steel Piling	55020

STATE OF ARKANSAS
Larry W. Miller
REGISTERED PROFESSIONAL ENGINEER
No. 13339
3-24-14
LARRY W. MILLER
BRIDGE ENGINEER

SHEET 1 OF 2
LAYOUT OF BRIDGES OVER REDMOND ROAD
REDMOND RD. & MAIN ST.
STRS. & APPRS. (JACKSONVILLE) (F)
PULASKI COUNTY

ROUTE 67 SEC. 10

ARKANSAS STATE HIGHWAY COMMISSION

LITTLE ROCK, ARK.

DRAWN BY: LWM DATE: 09-11
CHECKED BY: GS DATE: 03-01-13
DESIGNED BY: LWM DATE: 09-11
FILENAME: b061276ml 11.dgn
SCALE: 1" = 20'

BRIDGE NO. A&B7282 DRAWING NO. 53582

DATE REVISED	DATE FILMED	DATE REVISED	DATE FILMED	FED. ROAD DIST. NO.	STATE	FED. AID PROJ. NO.	SHEET NO.	TOTAL SHEETS
				6	ARK.			
				JOB NO.		061276	178	438
				(1) A&B7282		LAYOUT		53583

566+00 567+00 568+00 569+00

Elevations shown are along CL Bridge. Stationing is along CL Median. Stations shown in elevation are determined by a radial projection from CL Bridge to CL Median. For more information refer to STAKING DIAGRAM on Dwg. No 53584.

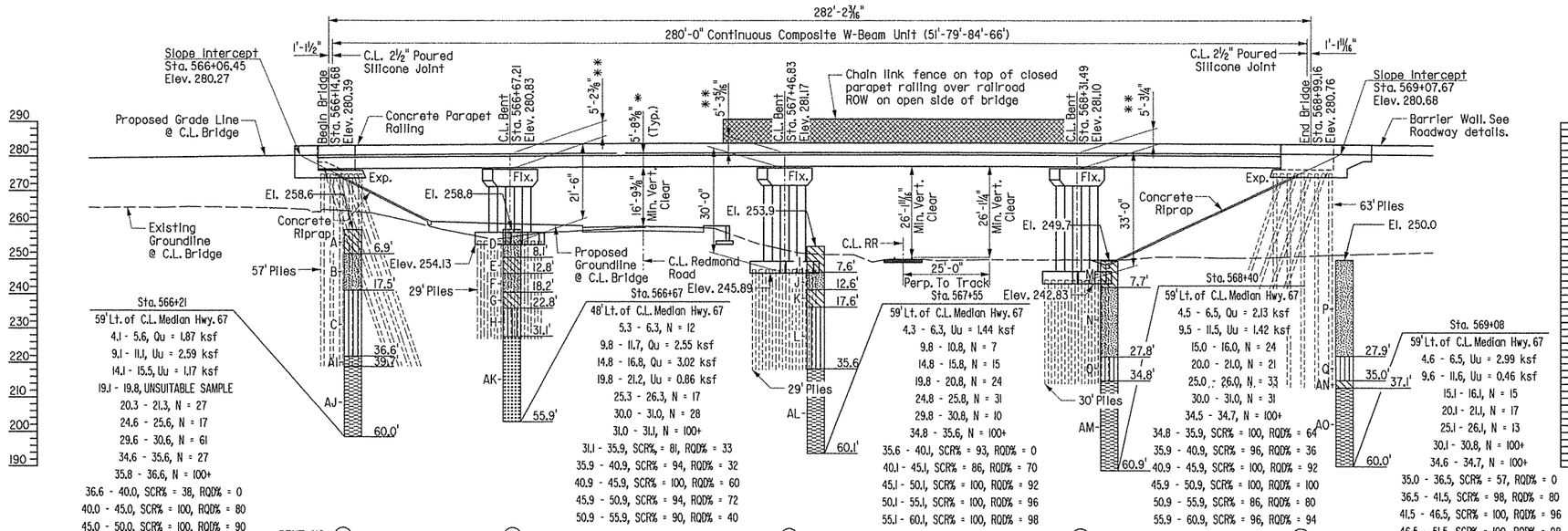

ELEVATION - BRIDGE A

Boring Legend

A- Red, Sandy, Very Stiff, Lean Clay.
B- Red & Tan, Medium Dense, Silty Sand.
C- Gray & Black, Medium Dense to Very Dense, Silt with Sand.
D- Brown, Medium Dense, Clayey Sand with Gravel.
E- Brown & Tan, Stiff, Sandy Silty Clay.
F- Gray, Medium Dense, Silty, Sand.
G- Brown, Stiff, Fat Clay with Sand.
H- Black, Very Stiff to Very Hard, Silt with Sand.
I- Red & Gray, Medium Stiff, Sandy Silty Clay.
J- Red & Gray, Loose, Silty Sand.
K- Red & Gray, Stiff, Fat Clay with Sand.
L- Red & Gray, Stiff to Very Hard, Silt with Sand.
M- Red & Gray, Stiff, Sandy Silty Clay.
N- Red & Gray, Medium Dense to Dense, Silty Sand.
O- Black, Hard to Very Hard, Silt with Sand.
P- Red, Gray & Tan, Medium Dense, Silty Sand.
Q- Black, Very Hard, Silt with Sand.
R- Brown & Gray, Medium Stiff to Stiff, Sandy Silty Clay.
S- Brown & Gray, Loose to Medium Dense, Silty Sand.
T- Brown & Black, Soft to very Stiff, Silt with Sand.
U- Black, Poorly Graded, Very Dense, Gravel with Silt.
V- Brown & Gray, Stiff, Fat Clay with Sand.
W- Brown & Gray, Medium Dense, Silty Sand.
X- Brown & Gray, Medium Dense, Silty Sand.
V- Gray, Very Stiff, Silt with Sand.
Z- Gray, Very Dense, Poorly Graded, Gravel with Sand.
AA- Brown, Medium Dense, Silty Sand.
AB- Brown & Gray, Stiff, Fat Clay with Sand.
AC- Brown & Gray, Loose to Medium Dense, Silty Sand.
AD- Dark Gray, Very Stiff to Hard, Silt with Sand.
AE- Brown & Gray, Medium Dense, Silty Sand.
AF- Brown, Gray & Black, Very Stiff to Very Hard, Silt with Sand.
AG- Dark Brown, Brown, Light Brown, Gray, Orange & Tan, Loose to Medium Dense, Silty Sand.
AH- Black, Hard to Very Hard, Silt with Sand.
AI- Shale: Dark Brown, Dk. Gray, Moderately to Completely Weathered.
AJ- Shale: Black to Dk. Gray, Moderately Weathered.
AK- Sandstone: Gray, Dk. Gray, Slightly Weathered to Fresh.
AL- Shale: Dark Gray-Black to Black, Moderately Weathered.
AM- Shale: Black to Dk. Gray, Moderately Severe to Moderately Weathered.
AN- Shale Frags & Clay: Dark Brown, Dk. Gray-Black, Moderately Severe to Completely Weathered.
AO- Shale: Black, Fresh with Intervals Moderately Weathered.
AP- Sandstone: Light Gray to Gray with Intervals Dk. Gray to Black, Fresh to Slightly Weathered.
AQ- Shale: Black to Dk. Gray, Slightly to Moderately Weathered.
AR- Shale: Black to Dk. Gray, Moderately Severe to Severely Weathered.
AS- Sandstone: Gray, Dk. Gray, Slightly Weathered to Fresh.
AT- Shale: Black to Dk. Gray, Slightly Weathered.
AU- Shale: Black to Dk. Gray in Parts, Fresh with Seams Moderately to Severely Weathered.

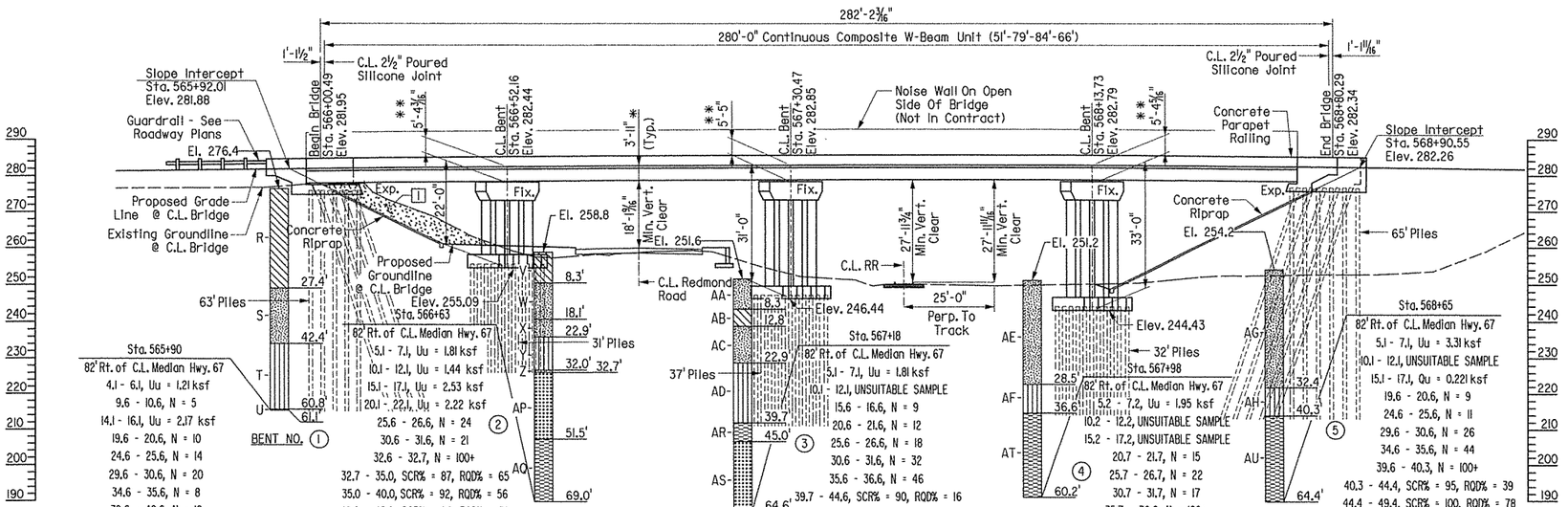

** Top Of Deck @ C.L. Bent @ C.L. Bridge To Low Side Top Of Cap

* Top Of Deck @ C.L. Bridge To Low Beam

ELEVATION - BRIDGE B

(1) Note: Excavate the existing embankment at the bridge ends to achieve the slopes shown. See Dwg. No. 53582 for additional information.

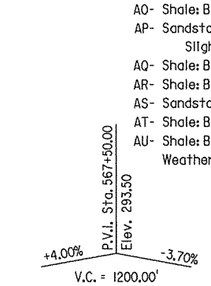

VERTICAL CURVE DATA

(Along Profile Grade)

STATE OF ARKANSAS
REGISTERED PROFESSIONAL ENGINEER
No. 11339
8-19-13
LARRY W. MILLER
BRIDGE ENGINEER

SHEET 2 OF 2
LAYOUT OF BRIDGES OVER REDMOND ROAD
REDMOND RD. & MAIN ST.
STRS. & APPRS. (JACKSONVILLE) (F)
PULASKI COUNTY

ROUTE 67 SEC. 10

ARKANSAS STATE HIGHWAY COMMISSION

LITTLE ROCK, ARK.

DRAWN BY: LWM DATE: 09-11 FILENAME: b061276ml_12.dgn
CHECKED BY: GS DATE: 03-01-13 SCALE: 1" = 20'
DESIGNED BY: LWM DATE: 09-11

BRIDGE NO. A&B7282 DRAWING NO. 53583

DATE REVISED	DATE FILMED	DATE REVISED	DATE FILMED	FED. ROAD DIST. NO.	STATE	FED. AID PROJ. NO.	SHEET NO.	TOTAL SHEETS
				6	ARK.			
				JOB NO.		061276	179	438
				(1) A&B7282		STAKING DIAGRAM		53584

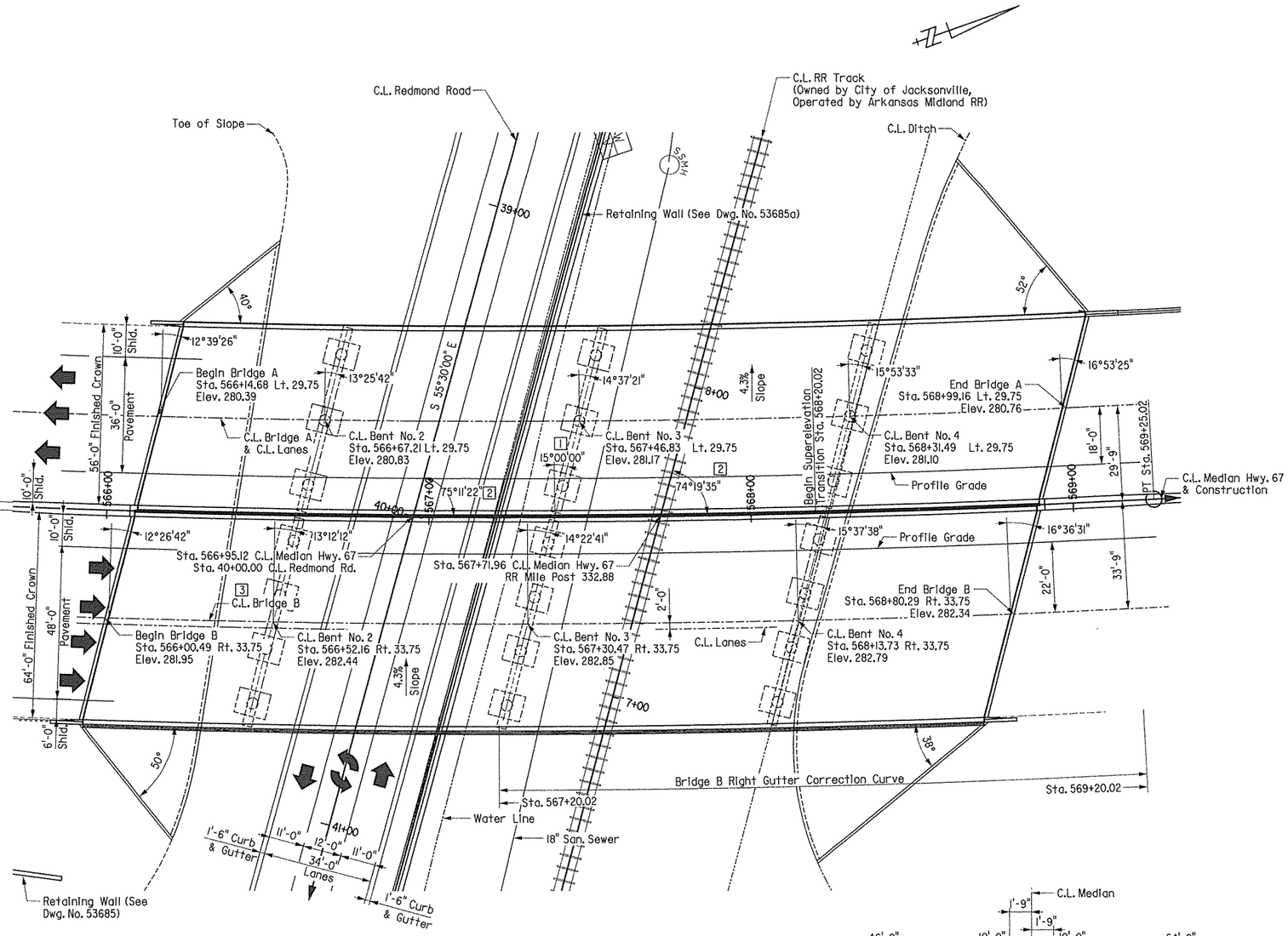

[1] Skew is measured to a line which is parallel to a radial line through Station 567+71.96. All bents are parallel.

[2] Angle is measured to local tangent.

[3] Located with respect to Clear Roadway.

PLAN

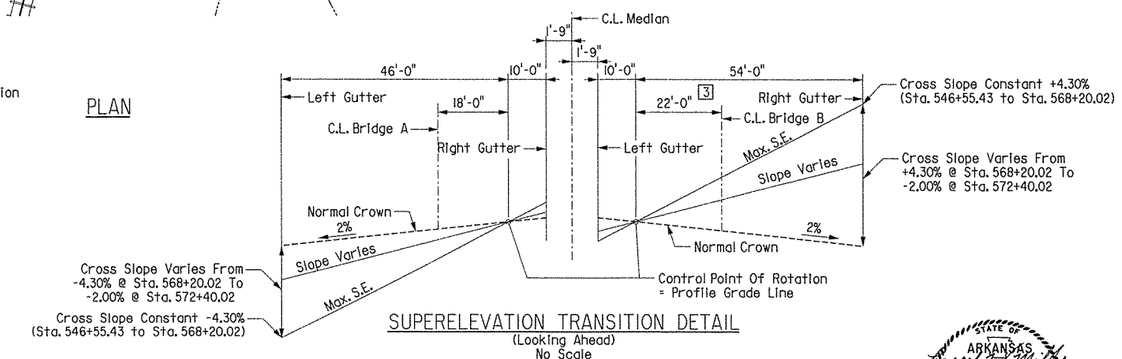

SUPERELEVATION TRANSITION DETAIL
(Looking Ahead)
No Scale

Maximum Superelevation = 4.30%
Length Of Superelevation Transition = 420'
Begin Transition Sta. 568+20.02
End Transition Sta. 572+40.02
For additional information, see Std. Dwg. SE-1

For Bridge B Stations 567+20.02 to 569+20.02, use Right Gutter Correction Curve and Profile Grade to compute superelevation.

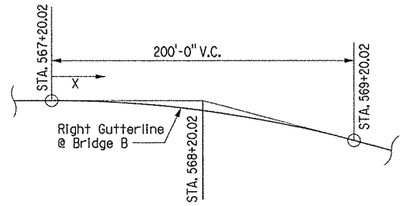

Right is defined when facing direction of increasing station.

The right gutterline of Bridge 'B' has been smoothed with a correction equation between the stations shown. The roadway cross slope at any station is a straight line between the profile grade line and the right gutterline.

Elev. = 284.20 + 0.0034237(X) - 0.0000052333(X^2)

X is the distance in feet along centerline survey from beginning station shown. Elevation is at gutterline.

RIGHT GUTTER CORRECTION CURVE
(Bridge B Only)
No Scale

Stationing for the project is along C.L. Median and C.L. Construction. C.L. Bridge is on a horizontal curve concentric to C.L. Median. The bent stations are determined by projecting a radial line from C.L. Median to the C.L. Bridge. The offsets shown are measured from C.L. Median along radial lines. The total bridge length, span lengths, and C.L. Joint to Beginning and End of Bridge dimensions are measured along the C.L. Bridge. Deck elevations are at C.L. Bridge. All bents are constructed along lines skewed from radial lines. Skew is measured at C.L. Bent for intermediate bents and at C.L. Joint for end bents.

STAKING DIAGRAM
BRIDGES OVER REDMOND ROAD
REDMOND RD. & MAIN ST.
STRS. & APPRS. (JACKSONVILLE) (F)
PULASKI COUNTY

ROUTE 67 SEC. 10

ARKANSAS STATE HIGHWAY COMMISSION
LITTLE ROCK, ARK.

STATE OF ARKANSAS
Larry W. Miller
REGISTERED PROFESSIONAL ENGINEER
No. 11339
8-19-13
LARRY W. MILLER
BRIDGE ENGINEER

DRAWN BY: LWM DATE: 09-11
CHECKED BY: GS DATE: 03-01-13
DESIGNED BY: LWM DATE: 09-11
FILENAME: b061276ml_15.dgn
SCALE: 1" = 20'

BRIDGE NO. A&B7282 DRAWING NO. 53584

DATE REVISED	DATE FILMED	DATE REVISED	DATE FILMED	FED. ROAD DIST. NO.	STATE	FED. AID PROJ. NO.	SHEET NO.	TOTAL SHEETS
				6	ARK.			
				JOB NO.		061276	180	438
				(1) A&B7282		STAGE CONSTRUCTION		53585

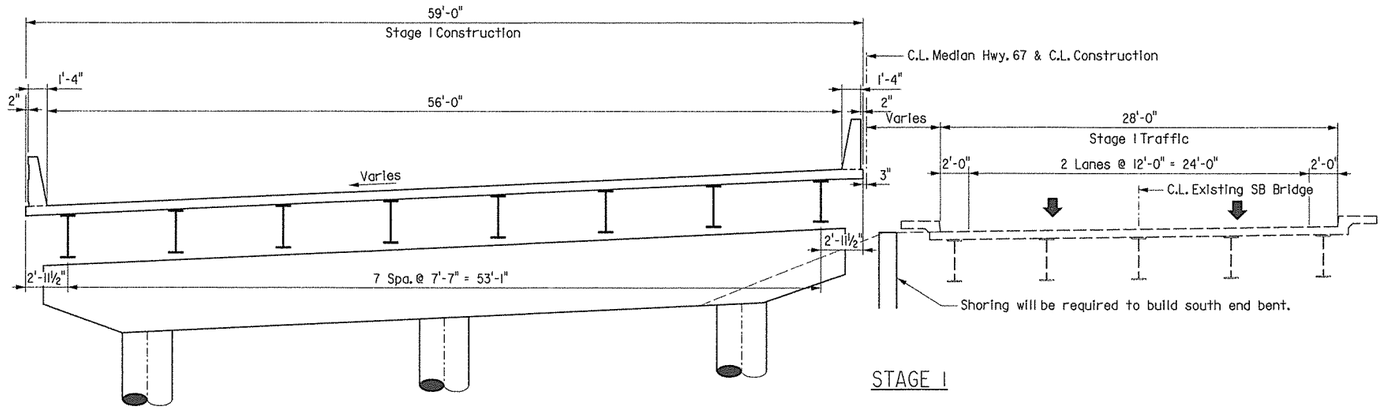

STAGE 1

All dimensions are perpendicular to the proposed alignment.

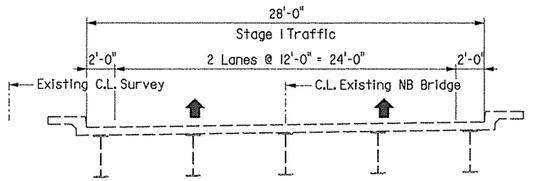

There is no bridge construction required in Stage 2.

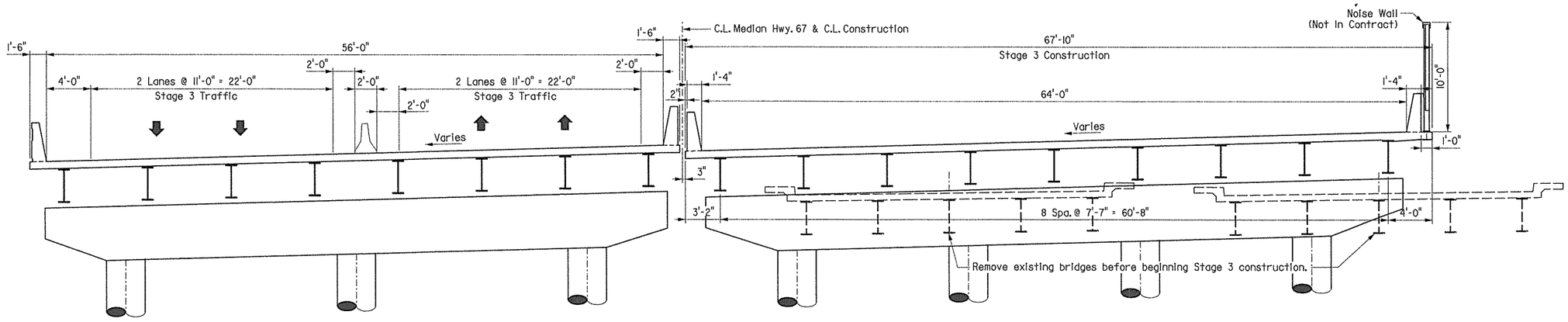

STAGE 3

STATE OF ARKANSAS
REGISTERED PROFESSIONAL ENGINEER
No. 11339
8/19/13
LARRY W. MILLER
BRIDGE ENGINEER

SHEET 1 OF 2
DETAILS OF STAGE CONSTRUCTION
REDMOND ROAD

ROUTE 67 SEC. 10

ARKANSAS STATE HIGHWAY COMMISSION

LITTLE ROCK, ARK.

DRAWN BY: LWM DATE: 09-11
CHECKED BY: GS DATE: 03-01-13
DESIGNED BY: LWM DATE: 09-11

FILENAME: b061276ml_13.dgn
SCALE: 3/16" = 1'

BRIDGE NO. A&B7282 DRAWING NO. 53585

DATE REVISED	DATE FILMED	DATE REVISED	DATE FILMED	FED. ROAD DIST. NO.	STATE	FED. AID PROJ. NO.	SHEET NO.	TOTAL SHEETS
				6	ARK.			
				JOB NO.		061276	181	438
				(1) A&B7282		STAGE CONSTRUCTION		53586

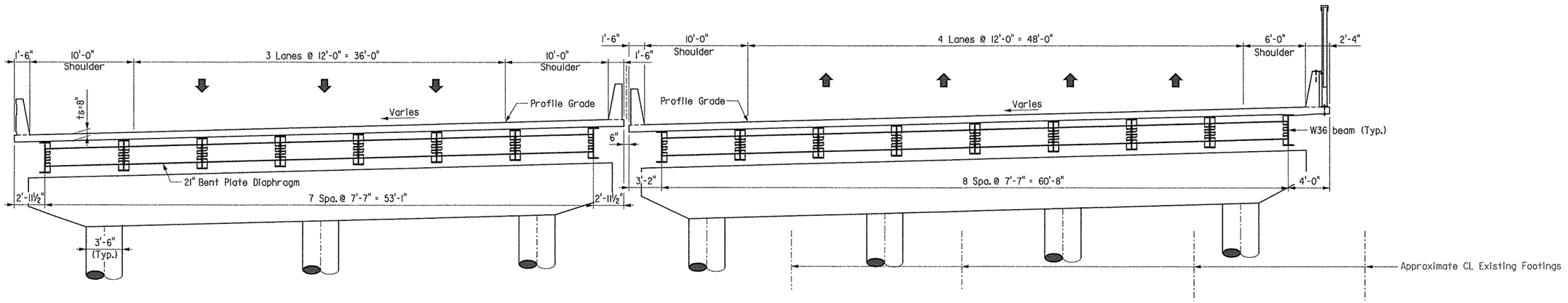

All dimensions are perpendicular to proposed centerline survey unless noted otherwise.

FINAL SECTION

3/16" = 1'

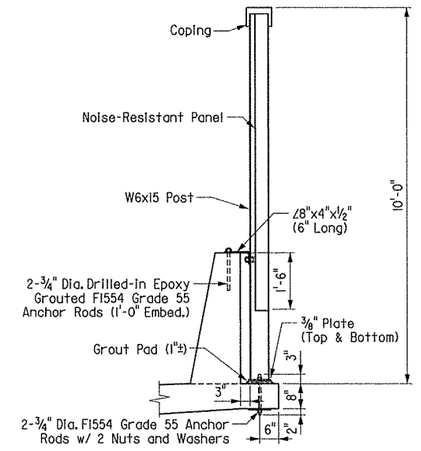

This detail shows minimum requirements. Contractor may submit alternatives to the Engineer for approval.

SECTION THRU NOISE WALL

Scale: ½" = 1'
(Not In Contract)

STATE OF ARKANSAS
REGISTERED PROFESSIONAL ENGINEER
No. 11339
LARRY W. MILLER
8-19-13

BRIDGE ENGINEER

SHEET 2 OF 2
DETAILS OF STAGE CONSTRUCTION
REDMOND ROAD

ROUTE 67 SEC. 10

ARKANSAS STATE HIGHWAY COMMISSION

LITTLE ROCK, ARK.

DRAWN BY: LWM DATE: 09-11
CHECKED BY: GS DATE: 03-01-13
DESIGNED BY: LWM DATE: 09-11

FILENAME: b061276ml 14.dgn
SCALE: As Shown

BRIDGE NO. A&B7282 DRAWING NO. 53586

DATE REVISED	DATE FILMED	DATE REVISED	DATE FILMED	FED. ROAD DIST. NO.	STATE	FED. AID PROJ. NO.	SHEET NO.	TOTAL SHEETS
				6	ARK.			
				JOB NO.		061276	182	438
				(1) A&B7282		EXHIBIT A		53587

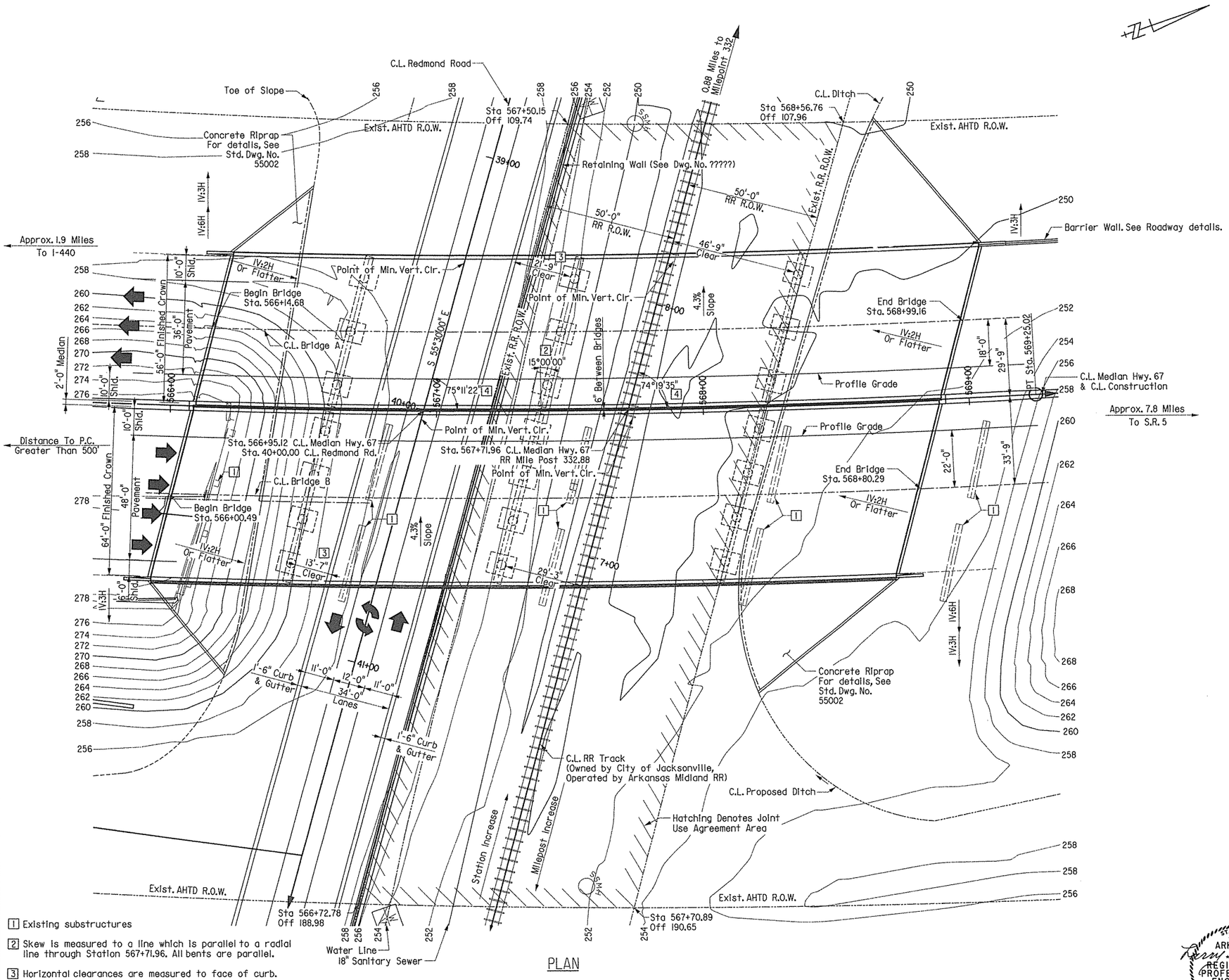

PLAN

[1] Existing substructures

[2] Skew is measured to a line which is parallel to a radial line through Station 567+71.96. All bents are parallel.

[3] Horizontal clearances are measured to face of curb.

[4] Angle is measured to local tangent.

SHEET 1 OF 2
EXHIBIT A
LAYOUT OF BRIDGES OVER REDMOND ROAD
REDMOND RD. & MAIN ST.
STRS. & APPRS. (JACKSONVILLE) (F)
PULASKI COUNTY

ROUTE 67 SEC. 10

ARKANSAS STATE HIGHWAY COMMISSION

LITTLE ROCK, ARK.

STATE OF ARKANSAS
REGISTERED PROFESSIONAL ENGINEER
No. 11339
3-24-14
LARRY W. MILLER
BRIDGE ENGINEER

DRAWN BY: LWM DATE: 09-11
CHECKED BY: GS DATE: 03-01-13
DESIGNED BY: LWM DATE: 09-11

FILENAME: b061276ml_x1.dgn
SCALE: 1" = 20'

BRIDGE NO. A&B7282 DRAWING NO. 53587

The elevations of the existing top-of-rail profile shall be verified by the Contractor prior to beginning construction. Any discrepancies that will decrease the vertical clearance shown in the Elevation Section shall be brought to the attention of the railroad prior to construction.

DATE REVISED	DATE FILMED	DATE REVISED	DATE FILMED	FED. ROAD DIST. NO.	STATE	FED. AID PROJ. NO.	SHEET NO.	TOTAL SHEETS
				6	ARK.			
				JOB NO.		061276	183	438
				(1) A&B7282		Exhibit A		53588

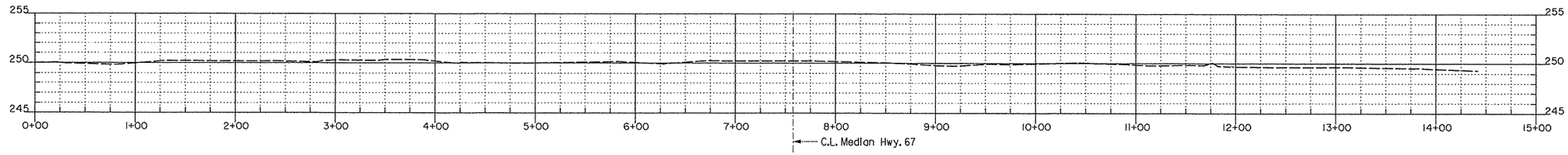

PROFILE ALONG TOP OF SOUTH RAIL

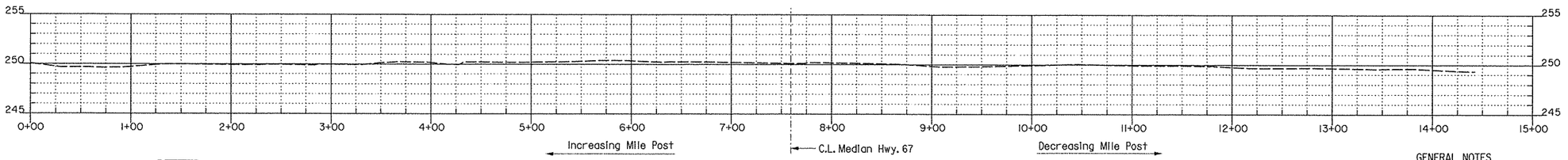

PROFILE ALONG TOP OF NORTH RAIL

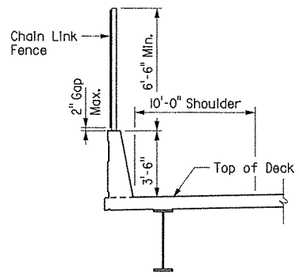

BRIDGE A: SECTION THRU PARAPET

N.T.S.

Note: A 6'-6" min. height chain link fence is required as shown on the left side of Bridge A. The fence is to be mounted on top of the concrete parapet rail.

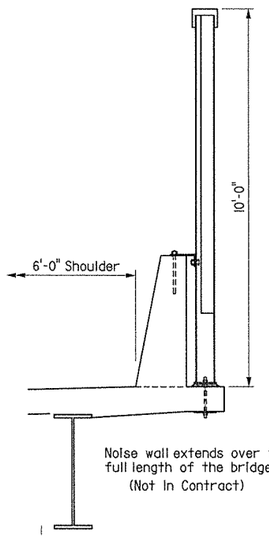

BRIDGE B: SECTION THRU NOISE WALL

Scale: ½" = 1'-0"

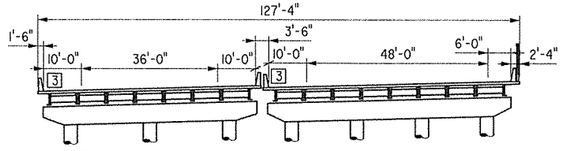

3 Closed Parapet Railing. No Deck Drains over Railroad Right of Way (Typical At Low Side Of Each Bridge).

TYPICAL SECTION THRU BRIDGES

Scale: 1" = 20'-0"

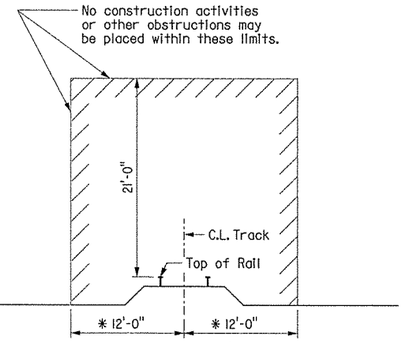

4 Note: No excavation permitted within 12' of C.L. track except as follows.

* Measured normal to C.L. Track.

4 Removal of existing bents adjacent to track will require excavtion within 8' of C.L. track. These existing bents shall be removed to a depth of 6' below base of rail.

MINIMUM CONSTRUCTION CLEARANCES

⅛" = 1'-0"

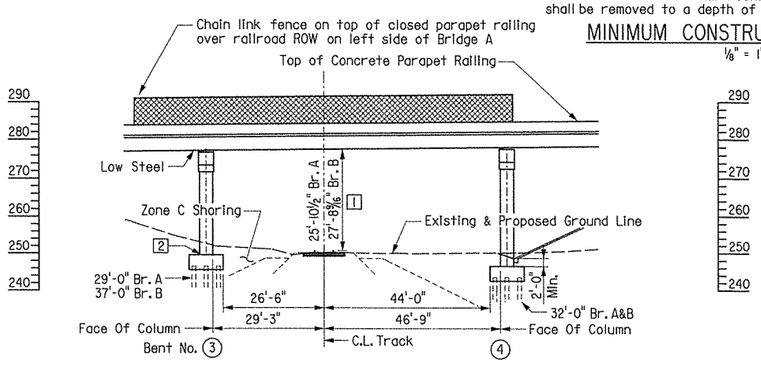

1 Low Steel to Top of Rail at Point of Minimum Vertical Clearance.

2 Top of footing elevation is approximately equal to bottom of tie.

Piles are steel HP12x53.

ELEVATION SECTION NORMAL TO TRACK

Scale: 1" = 20'-0"

GENERAL NOTES

1. The proposed grade separation project will not significantly change the quantity and/or characteristics of the flow in the Railroad's ditches and/or drainage structure.
2. The State shall not plow ice, snow or sleet over the sides of the structure. In consideration of this practice, the Carrier waives its request for the State to attach splash boards to sides of the structure. This statement is in the State-Railroad Agreement.
3. All demolition within the Railroad's right-of-way and/or demolition that may impact the Railroad's tracks or operations shall be in compliance with the Railroad's Demolition Guidelines.
4. All permanent clearances shall be verified before project closing.
5. Erection over the Railroad's right-of-way shall be designed to cause no interruption to the Railroad's operation. Erection over the Railroad's tracks shall be developed such that it enables the track(s) to remain open to traffic per the Railroad's requirements.
6. The Contractor must submit a proposed method of erosion and sediment control and have the method approved by the Railroad prior to beginning any grading on the project site.
7. Railroad requirements do not allow work within 50 feet of track centerline when a train passes the work site and all personnel must clear the area within 25 feet of the track centerline and secure equipment when trains are present.
8. Construction shall comply with the requirements of Job 061276 Special Provision "Insurance, Construction, and Flagging Requirements on Railroad Property (Arkansas Midland Railroad)". Any shoring shall comply with the Railroad's requirements.
9. Railroad review and approval of Shoring, Erection, and Falsework is required. Allow a minimum of four weeks for the review and approval of each submittal.
10. For Railroad coordination, refer to the Railroad Minimum Requirements of Job 061276 Special Provision "Insurance, Construction, and Flagging Requirements on Railroad Property (Arkansas Midland Railroad)".
11. All known utilities in the Railroad right-of-way are denoted on the plan view.

Latitude 34.8616 Longitude -92.12974
Mile Post 332.88 Hoxie Subdivision

STATE OF ARKANSAS
REGISTERED PROFESSIONAL ENGINEER
No. 11339
LARRY W. MILLER
8-19-13
BRIDGE ENGINEER

SHEET 2 OF 2
EXHIBIT A
LAYOUT OF BRIDGES OVER REDMOND ROAD
REDMOND RD. & MAIN ST.
STRS. & APPRS. (JACKSONVILLE) (F)
PULASKI COUNTY

ROUTE 67 SEC. 10

ARKANSAS STATE HIGHWAY COMMISSION

LITTLE ROCK, ARK.

DRAWN BY: LWM DATE: 09-11
CHECKED BY: GS DATE: 03-01-13
DESIGNED BY: LWM DATE: 09-11
FILENAME: b061276ml_x2.dgn
SCALE: As Shown

BRIDGE NO. A&B7282 DRAWING NO. 53588

DATE REVISED	DATE FILMED	DATE REVISED	DATE FILMED	FED. ROAD DIST. NO.	STATE	FED. AID PROJ. NO.	SHEET NO.	TOTAL SHEETS
				6	ARK.			
				JOB NO.		061276	184	438
				① A7282		END BENT DETAILS		53589

NOTE: Class I Protective Surface Treatment shall be applied to the roadway face and top of the end bent rail and the top of the backwall.

** Measured Along Gutterline

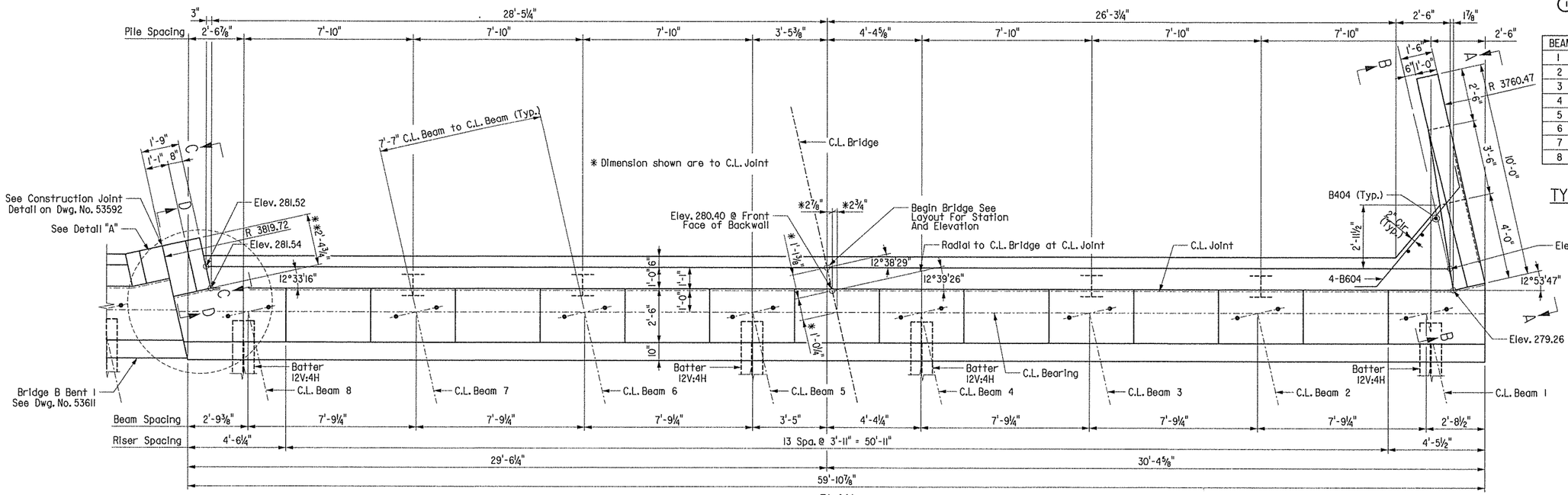

BEAM	"A"
1	12°45'52"
2	12°44'18"
3	12°42'45"
4	12°41'12"
5	12°39'39"
6	12°38'06"
7	12°36'34"
8	12°35'03"

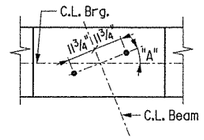

TYPICAL ANCHOR BOLT LAYOUT
No Scale

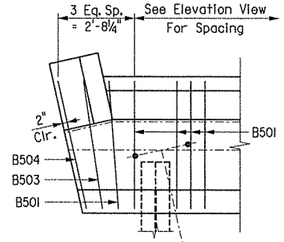

DETAIL "A"
Scale: ⅜" = 1'-0"

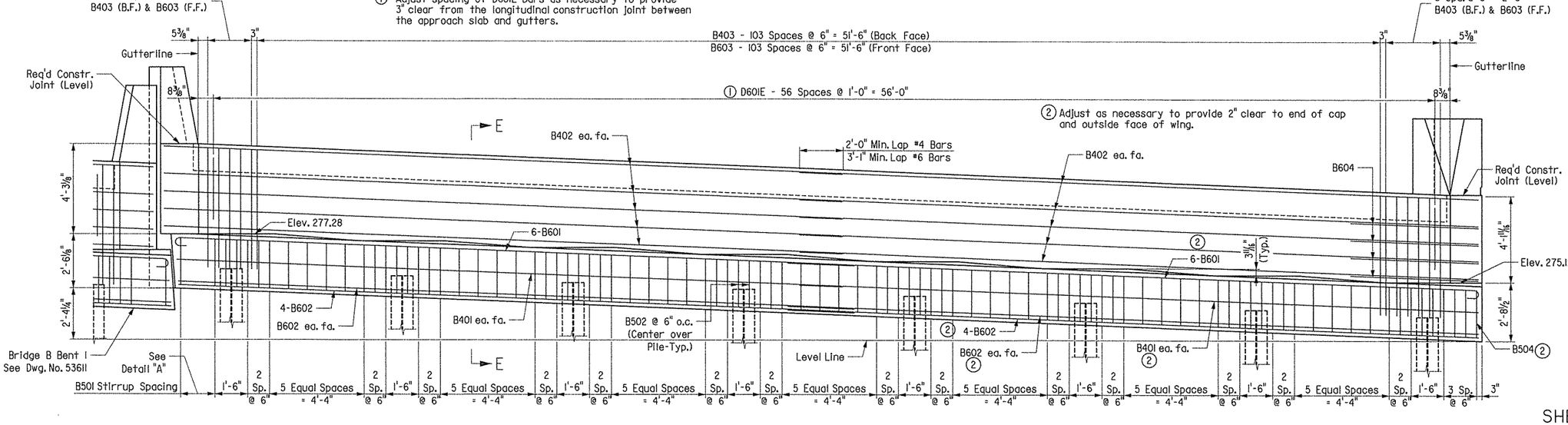

ELEVATION
⅜" = 1'-0"
(Looking Back)

For GENERAL NOTES FOR SUBSTRUCTURE and Detail at Pile Top, see Dwg. No. 53592.

For VIEW A-A, VIEW B-B, VIEW C-C and VIEW D-D, see Dwg. Nos. 53590 & 53591.

For additional information, see LAYOUT on Dwg. No. 53582.

For Details of Wing and Rail, see Dwg. No. 53590.

For Bar List and Section E-E, see Dwg. No. 53591.

STATE OF ARKANSAS
Larry W. Miller
REGISTERED PROFESSIONAL ENGINEER
No. 11339
8-19-13
LARRY W. MILLER
BRIDGE ENGINEER

SHEET 1 OF 3
BRIDGE A
DETAILS OF BENT 1
REDMOND ROAD

ROUTE 67 SEC. 10

ARKANSAS STATE HIGHWAY COMMISSION
LITTLE ROCK, ARK.

DRAWN BY: BEG DATE: 2-13
CHECKED BY: GS DATE: 03-01-13
DESIGNED BY: BEG DATE: 2-13
FILENAME: b061276a1 b11.dgn
SCALE: As Shown

BRIDGE NO. A7282 DRAWING NO. 53589

DATE REVISED	DATE FILMED	DATE REVISED	DATE FILMED	FED. ROAD DIST. NO.	STATE	FED. AID PROJ. NO.	SHEET NO.	TOTAL SHEETS
				6	ARK.			
				JOB NO.		061276	185	438
				(1) A7282		END BENT DETAILS		53590

* Parapet Enhancement shall be made continuous if slip forms are used on bridge parapet rail.

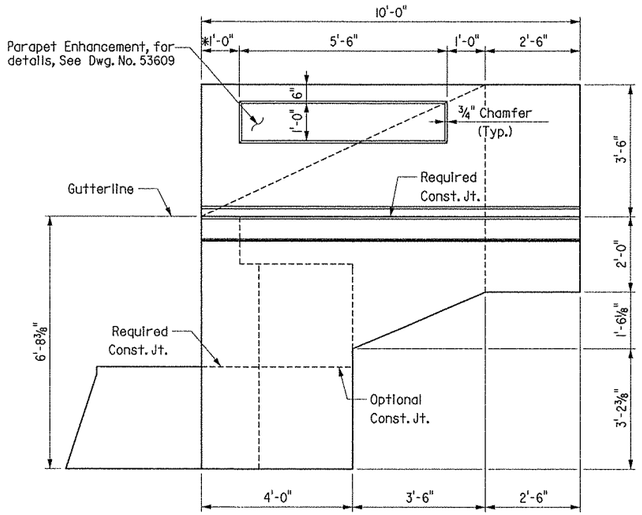

VIEW A-A
Scale: ½" = 1'-0"

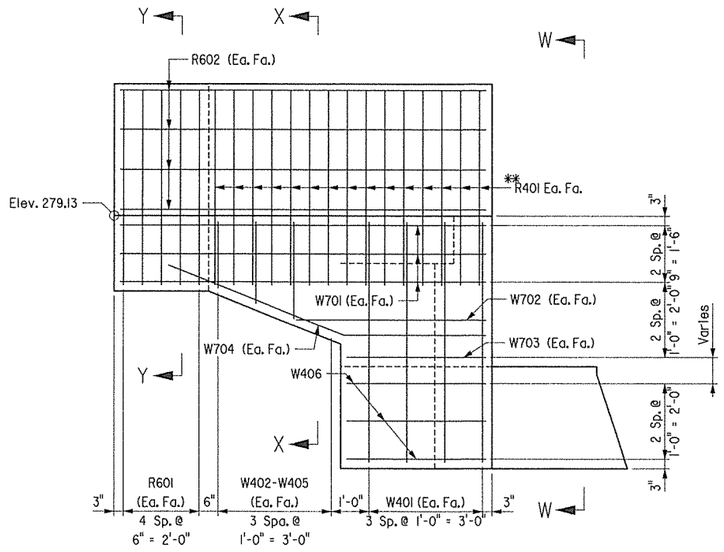

VIEW B-B
Scale: ½" = 1'-0"

**Bend R401 In Field as necessary to match rail face. Pin Diameter = 4".

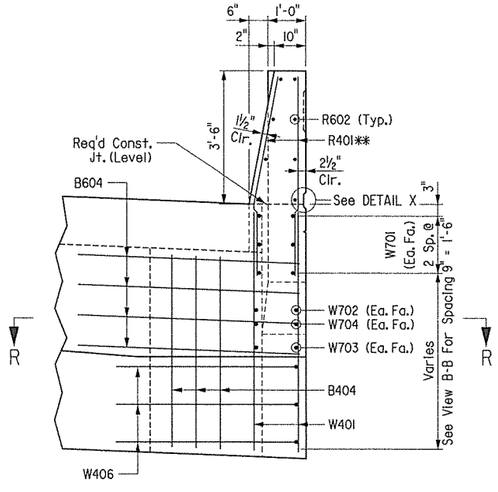

VIEW W-W
Scale: ½" = 1'-0"

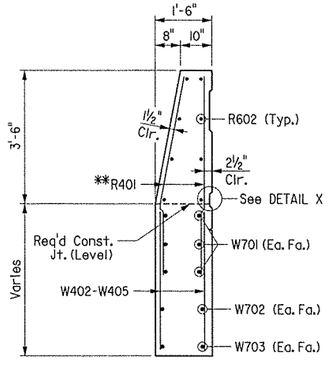

SECTION X-X
Scale: ½" = 1'-0"

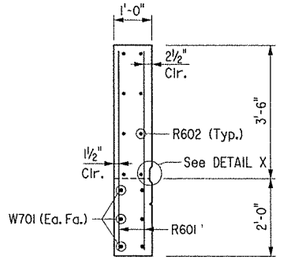

SECTION Y-Y
Scale: ½" = 1'-0"

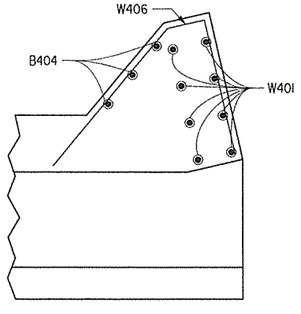

SECTION R-R
Scale: ½" = 1'-0"

For GENERAL NOTES FOR SUBSTRUCTURE, see Dwg. No. 53592.

For "DETAIL X", see Dwg. No. 53592.

For additional information, see LAYOUT on Dwg. No. 53582.

For Bar List, see Dwg. No. 53591.

STATE OF ARKANSAS
REGISTERED PROFESSIONAL ENGINEER
No. 13139
8-19-13
LARRY W. MILLER
BRIDGE ENGINEER

SHEET 2 OF 3
BRIDGE A
DETAILS OF BENT 1
REDMOND ROAD

ROUTE 67 SEC. 10

ARKANSAS STATE HIGHWAY COMMISSION
LITTLE ROCK, ARK.

DRAWN BY: BEG DATE: 2-13
CHECKED BY: GS DATE: 03-01-13
DESIGNED BY: BEG DATE: 2-13

FILENAME: b061276al_bl2.dgn
SCALE: As Shown

BRIDGE NO. A7282 DRAWING NO. 53590

DATE REVISED	DATE FILMED	DATE REVISED	DATE FILMED	FED. ROAD DIST. NO.	STATE	FED. AID PROJ. NO.	SHEET NO.	TOTAL SHEETS
				6	ARK.			
				JOB NO.		061276	186	438
				(1) A7282		END BENT DETAILS		53591

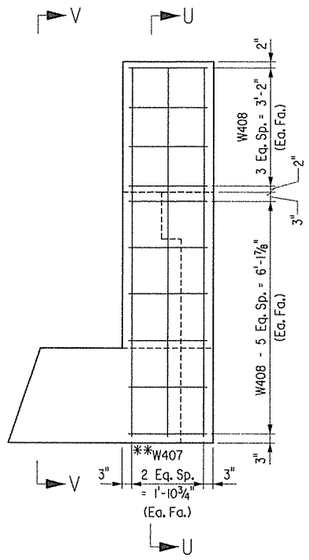

VIEW C-C
Scale: ½" = 1'-0"

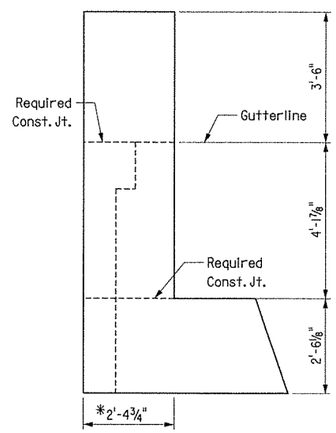

*Measured Along Gutterline.

VIEW D-D
Scale: ½" = 1'-0"

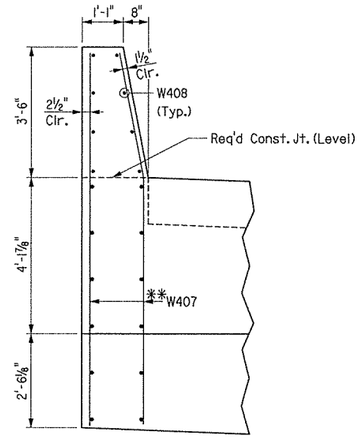

VIEW V-V
Scale: ½" = 1'-0"

Note: All bars designated with an "E" suffix are to be epoxy coated.

BAR LIST - BENT I

Mark	No. Req'd	Length	Pin Dia.
B401	4	31'-4"	Str.
B402	20	31'-4"	Str.
B403	115	4'-3"	Str.
B404	3	5'-1"	Str.
B501	75	12'-11"	2½"
B502	16	7'-10"	2½"
B503	1	13'-0"	2½"
B504	2	13'-1"	2½"
B601	12	32'-7"	4½"
B602	12	31'-11"	Str.
B603	115	8'-6"	4½"
B604	4	8'-0"	4½"
B605	16	2'-10"	4½"
D601E	57	5'-11"	4½"
R401	30	5'-2"	Str.
R601	10	5'-2"	Str.
R602	8	9'-8"	Str.
W401	8	6'-4"	Str.
W402 to W405	2 ea.	3'-0" to 1'-9"	Str.
W406	3	9'-4"	3"
W407	6	9'-10"	Str.
W408	20	2'-1"	Str.
W701	6	9'-8"	Str.
W702	2	5'-0"	Str.
W703	2	3'-8"	Str.
W704	2	8'-9"	5¼"

BENDING DIAGRAMS (Dimensions are out to out of bars)

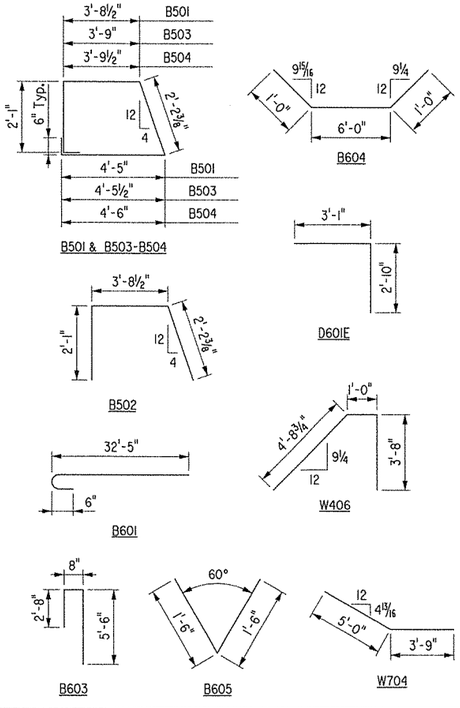

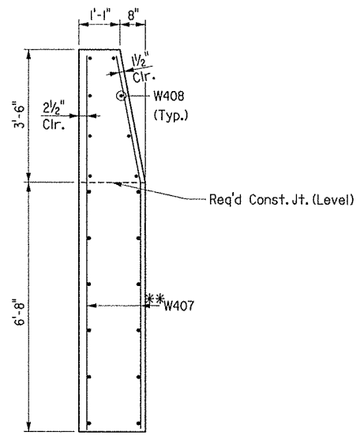

SECTION U-U
Scale: ½" = 1'-0"

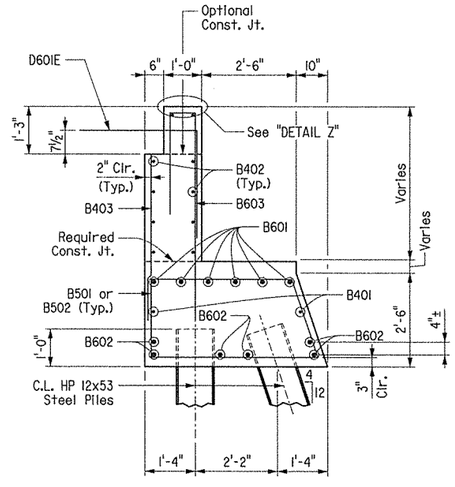

SECTION E-E
Scale: ½" = 1'-0"

** Bend W407 In Field, As Necessary To Match Rail Face. Pin Dia. = 4".

For GENERAL NOTES FOR SUBSTRUCTURE, see Dwg. No. 53592.

For "DETAIL Z", see Dwg. No. 53592.

For additional information, see LAYOUT on Dwg. No. 53582.

STATE OF ARKANSAS
REGISTERED PROFESSIONAL ENGINEER
No. 11339
8-19-13
LARRY W. MILLER
BRIDGE ENGINEER

SHEET 3 OF 3
BRIDGE A
DETAILS OF BENT I
REDMOND ROAD

ROUTE 67 SEC. 10

ARKANSAS STATE HIGHWAY COMMISSION
LITTLE ROCK, ARK.

DRAWN BY: BEG DATE: 2-13
CHECKED BY: GS DATE: 03-01-13
DESIGNED BY: BEG DATE: 2-13

FILENAME: b061276al_bl3.dgn
SCALE: As Shown

BRIDGE NO. A7282 DRAWING NO. 53591

DATE REVISED	DATE FILMED	DATE REVISED	DATE FILMED	FED. ROAD DIST. NO.	STATE	FED. AID PROJ. NO.	SHEET NO.	TOTAL SHEETS
				6	ARK.			
				JOB NO.		061276	187	438
				(1) A&B7282		END BENT DETAILS		53592

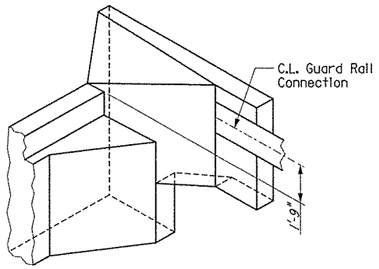

For details of guard rail connection, see Std. Dwg. No. GR-10.

Guard rail connection is not required on all bents. See Dwg. No. 53583 or Roadway Plans for location of guard rail connections.

Detail shown is for wings with guard rail connection. For three dimensional view of wings without guardrail connection, see Dwg. No. 53644

THREE DIMENSIONAL VIEW OF WING & RAIL

No Scale

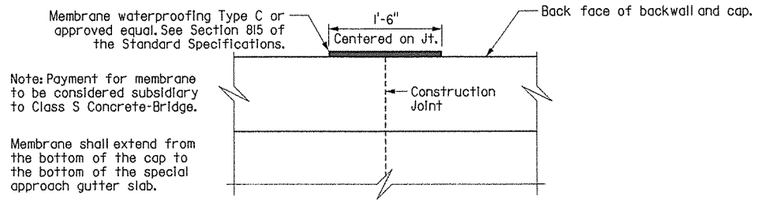

CONST. JOINT DETAIL

No Scale

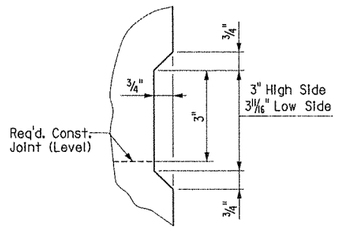

DETAIL X

No Scale

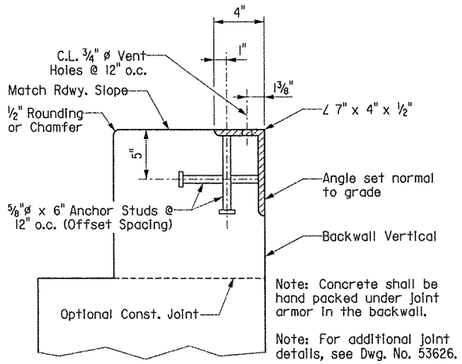

DETAIL Z

Scale: 2" = 1'-0"

GENERAL NOTES FOR SUBSTRUCTURE

All concrete shall be Class "S" with a minimum 28 day compressive strength f'c = 3,500 psi and shall be poured in the dry. All exposed corners to be chamfered ¾" unless otherwise noted.

All structural steel shall be AASHTO M 270, Grade 50 unless otherwise noted and shall be paid for as "STRUCTURAL STEEL IN BEAM SPANS (M 270, GR. 50)". All exposed surfaces shall be cleaned and painted in accordance with Section 807 and will be paid for under the pay item "PAINTING STRUCTURAL STEEL". The color of paint shall be Aluminum and shall match Fed. Std. 595B, Color Chip No. 37200.

All reinforcing steel shall conform to AASHTO M 31 or M322 Type A, Grade 60 (yield strength = 60,000 psi).

The backwall above the required construction joint shall not be poured until the beams are in place. Backwall may be placed prior to placing the adjacent concrete deck only if the optional backwall construction joint is used. See "DETAILS FOR BLOCKING EXPANSION JOINT DEVICE" on Dwg. No. 53626 for additional information.

Top reinforcing bars in cap shall be properly placed to avoid interference with anchor bolts or sheet metal sleeves.

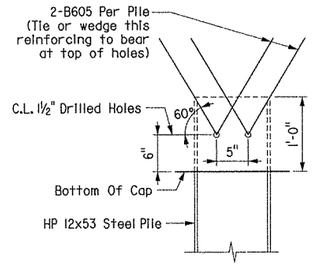

DETAIL AT PILE TOP

No Scale

Drilled holes will not be paid for directly but shall be considered incidental to the item "STEEL PILING (HP12x53)".

STATE OF ARKANSAS
REGISTERED PROFESSIONAL ENGINEER
No. 11339
3-24-14
LARRY W. MILLER
BRIDGE ENGINEER

COMMON DETAILS OF END BENTS REDMOND ROAD

ROUTE 67 SEC. 10

ARKANSAS STATE HIGHWAY COMMISSION

LITTLE ROCK, ARK.

DRAWN BY: BEG DATE: 2-13
CHECKED BY: GS DATE: 03-01-13
DESIGNED BY: BEG DATE: 2-13
FILENAME: b061276ml_bl4.dgn
SCALE: As Shown

BRIDGE NO. A&B7282 DRAWING NO. 53592

DATE REVISED	DATE FILMED	DATE REVISED	DATE FILMED	FED. ROAD DIST. NO.	STATE	FED. AID PROJ. NO.	SHEET NO.	TOTAL SHEETS
				6	ARK.			
				JOB NO.		061276	188	438
				(1) A7282		INTERIOR BENT DETAILS		53593

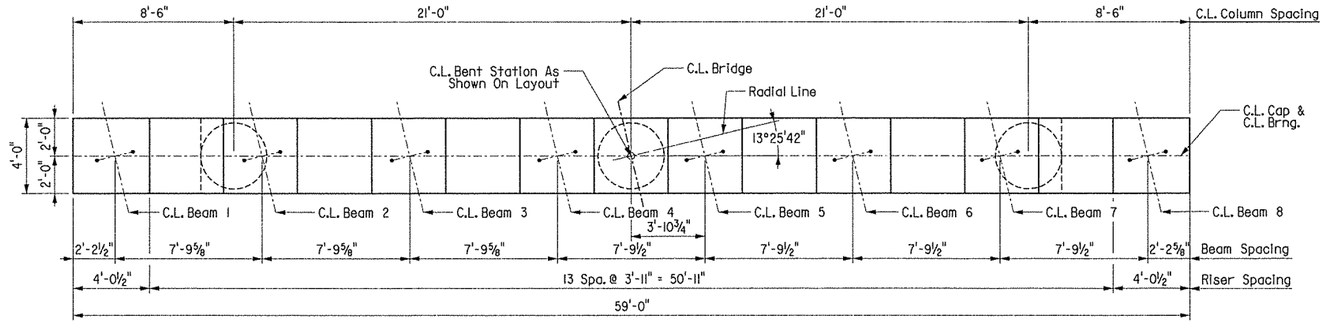

PLAN

¼" = 1'-0"

BEAM	"A"
1	13°31'31"
2	13°29'51"
3	13°28'12"
4	13°26'33"
5	13°24'54"
6	13°23'16"
7	13°21'38"
8	13°20'01"

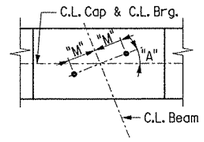

"M" = 11¾"

TYPICAL ANCHOR BOLT LAYOUT

No Scale

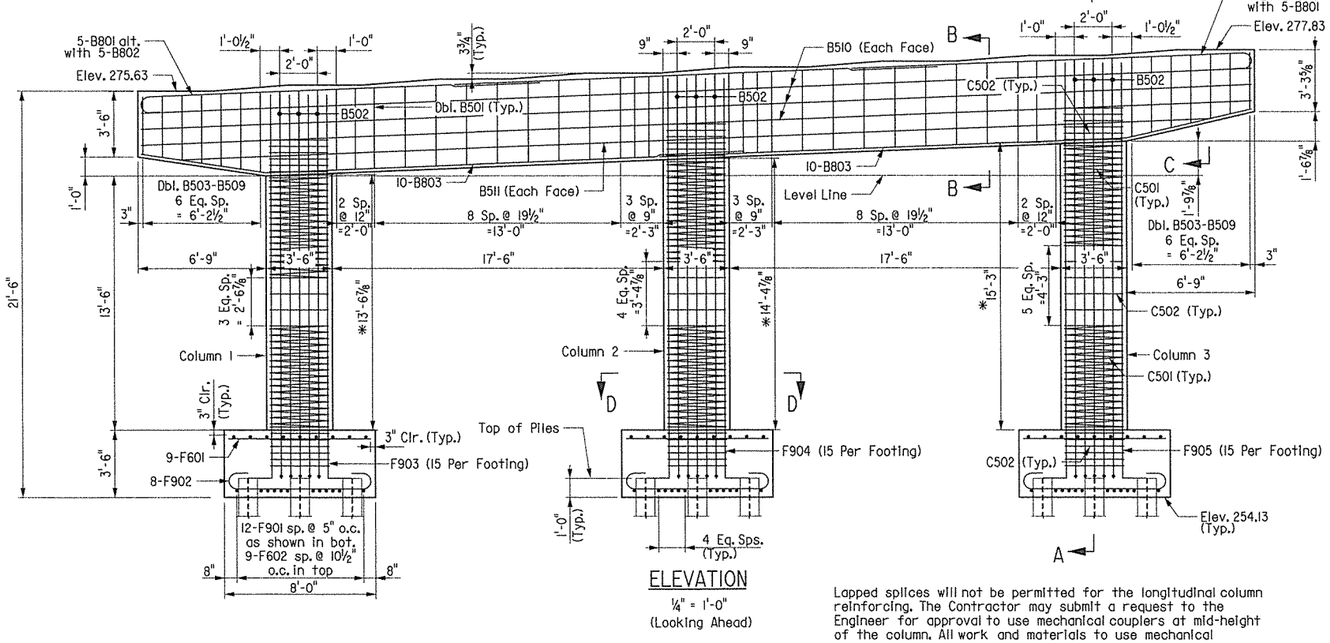

ELEVATION

¼" = 1'-0"

(Looking Ahead)

Lapped splices will not be permitted for the longitudinal column reinforcing. The Contractor may submit a request to the Engineer for approval to use mechanical couplers at mid-height of the column. All work and materials to use mechanical couplers will not be paid for directly but will be considered subsidiary to the item "Reinforcing Steel - Bridge (Grade 60)".

BAR LIST

Mark	Number Required	Dim. "A"	Length	Pin Dia.
B501	56	--	13'-7"	2½"
B502	9	--	11'-10"	2½"
B503 to B509	4 ea.	--	11'-4" to 13'-9"	2½"
B510	6	--	58'-8"	Str.
B511	2	--	54'-6"	Str.
B801	10	21'-3"	22'-2"	6"
B802	10	42'-3"	43'-2"	6"
B803	20	--	31'-11"	6"
C501	6	--	183'-8"	Spiral
C502	45	--	12'-2"	3¾"
F601	27	--	7'-6"	Str.
F602	27	--	9'-6"	Str.
F603	36	--	2'-10"	4½"
F901	36	9'-6"	12'-0"	9"
F902	24	7'-6"	10'-0"	9"
F903	15	20'-4"	21'-8"	9"
F904	15	21'-2"	22'-6"	9"
F905	15	22'-0"	23'-4"	9"

Bending Diagrams (Dimensions are out to out of bars.)

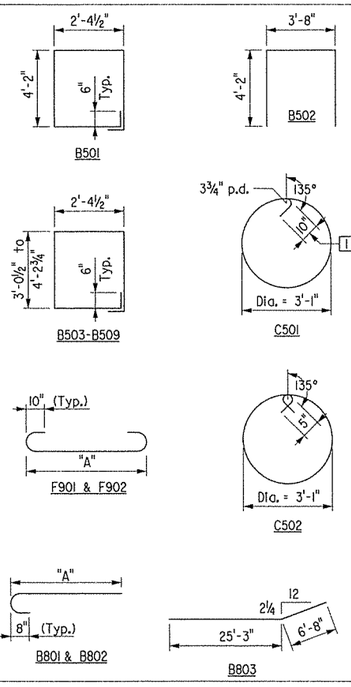

1 At each end of spiral. Hook may be field bent around a vertical bar.

Minimum Lap Splice Lengths:
#8 Bar: 4'-9"
#6 Bar: 3'-7"

For sections, detail at pile top and footing plan, see Dwg. No. 53596.

For substructure general notes, see Dwg. No. 53592.

*Measured along C.L. of column

STATE OF ARKANSAS
REGISTERED PROFESSIONAL ENGINEER
No. 11339
8-19-13
LARRY W. MILLER
BRIDGE ENGINEER

BRIDGE A
DETAILS OF BENT 2
REDMOND ROAD

ROUTE 67 SEC. 10

ARKANSAS STATE HIGHWAY COMMISSION

LITTLE ROCK, ARK.

DRAWN BY: AM DATE: 02-13
CHECKED BY: GS DATE: 03-01-13
DESIGNED BY: LM DATE: 01-13

FILENAME: b061276al_b2.dgn
SCALE: As Shown

BRIDGE NO. A7282 DRAWING NO. 53593

DATE REVISED	DATE FILMED	DATE REVISED	DATE FILMED	FED. ROAD DIST. NO.	STATE	FED. AID PROJ. NO.	SHEET NO.	TOTAL SHEETS
				6	ARK.			
				JOB NO.		061276	189	438
				(1) A7282		INTERIOR BENT DETAILS		53594

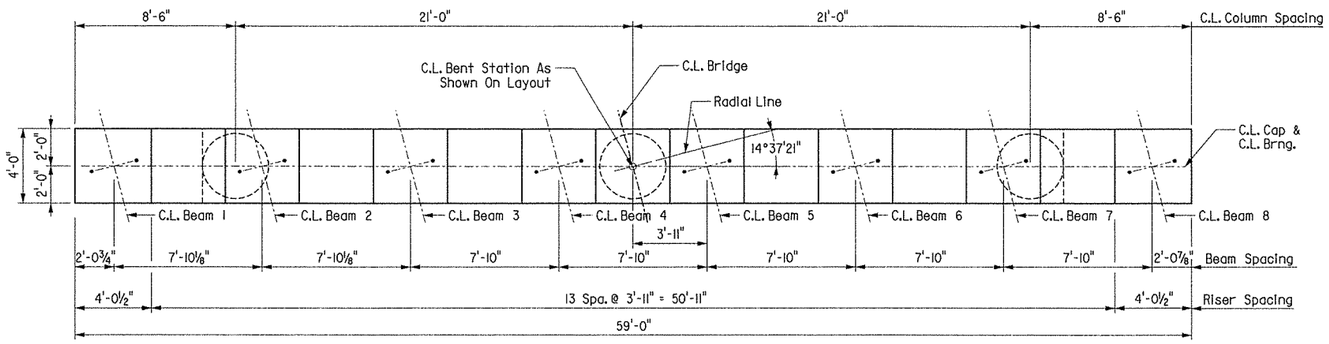

PLAN
¼" = 1'-0"

BEAM	"A"
1	14°43'43"
2	14°41'54"
3	14°40'05"
4	14°38'17"
5	14°36'29"
6	14°34'42"
7	14°32'55"
8	14°31'09"

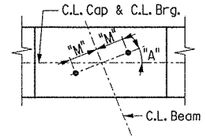

"M" = 12¼"

TYPICAL ANCHOR BOLT LAYOUT
No Scale

Lapped splices will not be permitted for the longitudinal column reinforcing. The Contractor may submit a request to the Engineer for approval to use mechanical couplers at mid-height of the column. All work and materials to use mechanical couplers will not be paid for directly but will be considered subsidiary to the item "Reinforcing Steel - Bridge (Grade 60)".

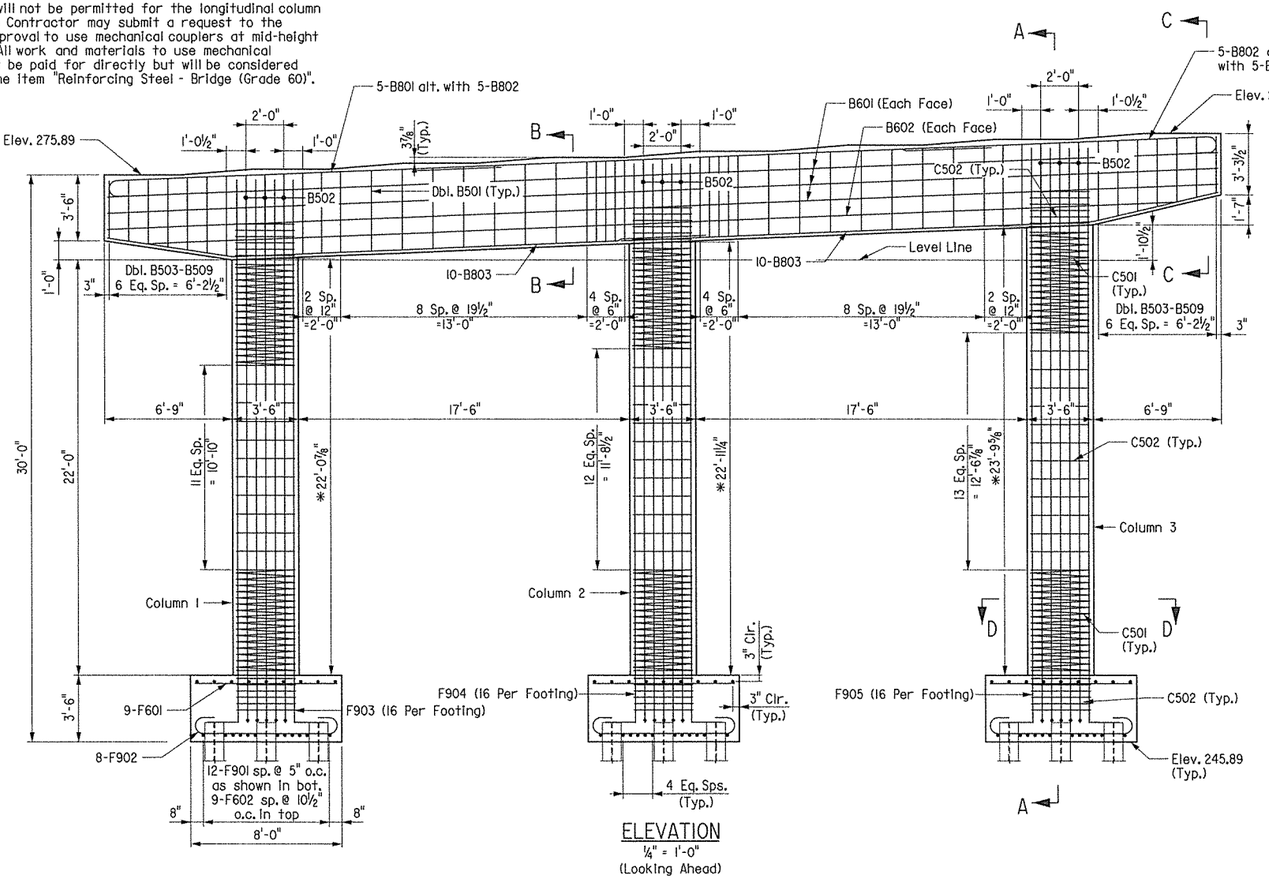

ELEVATION
¼" = 1'-0"
(Looking Ahead)

Minimum Lap Splice Lengths:
#8 Bar: 4'-9"
#6 Bar: 3'-7"

For sections, detail at pile top and footing plan, see Dwg. No. 53596.

For substructure general notes, see Dwg. No. 53592.

*Measured along C.L. of column

BAR LIST

Mark	Number Required	Dim. "A"	Length	Pin Dia.
B501	60	--	13'-7"	2½"
B502	9	--	11'-10"	2½"
B503 to B509	4 ea.	--	11'-4" to 13'-9"	2½"
B601	6	--	58'-8"	Str.
B602	2	--	54'-5"	Str.
B801	10	21'-3"	22'-2"	6"
B802	10	42'-3"	43'-2"	6"
B803	20	--	31'-11"	6"
C501	6	--	183'-8"	Spiral
C502	45	--	12'-2"	3¾"
F601	27	--	7'-6"	Str.
F602	27	--	9'-6"	Str.
F603	36	--	2'-10"	4½"
F901	36	9'-6"	12'-0"	9"
F902	24	7'-6"	10'-0"	9"
F903	16	28'-9"	30'-1"	9"
F904	16	29'-7"	30'-11"	9"
F905	16	30'-6"	31'-10"	9"

Bending Diagrams (Dimensions are out to out of bars.)

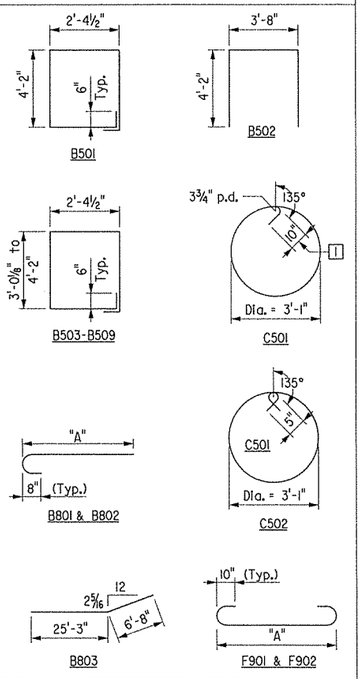

[1] At each end of spiral. Hook may be field bent around a vertical bar.

STATE OF ARKANSAS
REGISTERED PROFESSIONAL ENGINEER
No. 11339
8-19-13
LARRY W. MILLER
BRIDGE ENGINEER

BRIDGE A
DETAILS OF BENT 3
REDMOND ROAD

ROUTE 67 SEC. 10

ARKANSAS STATE HIGHWAY COMMISSION
LITTLE ROCK, ARK.

DRAWN BY: AM DATE: 02-13
CHECKED BY: GS DATE: 03-01-13
DESIGNED BY: LM DATE: 01-13
FILENAME: b061276a1_b3.dgn
SCALE: As Shown

BRIDGE NO. A7282 DRAWING NO. 53594

DATE REVISED	DATE FILMED	DATE REVISED	DATE FILMED	FED. ROAD DIST. NO.	STATE	FED. AID PROJ. NO.	SHEET NO.	TOTAL SHEETS
				6	ARK.			
				JOB NO.		061276	190	438
				(1) A7282		INTERIOR BENT DETAILS		53595

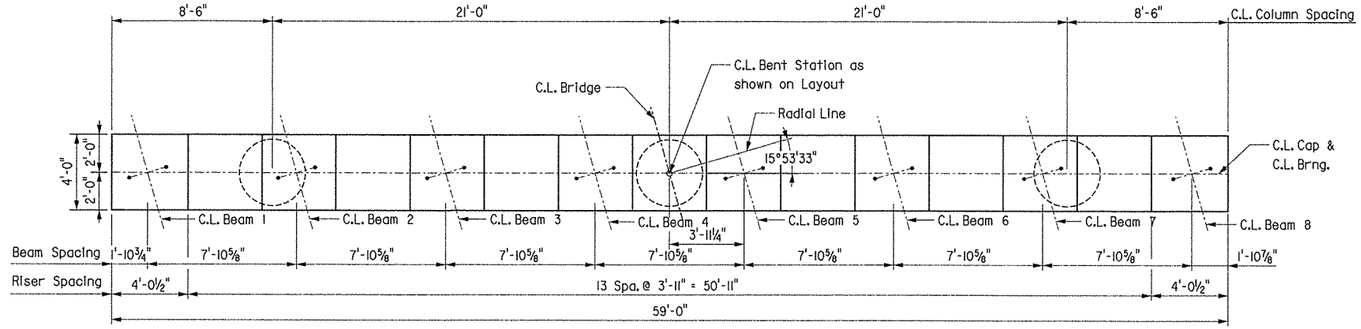

PLAN
¼" = 1'-0"

BEAM	"A"
1	16°00'29"
2	15°58'30"
3	15°56'32"
4	15°54'34"
5	15°52'36"
6	15°50'39"
7	15°48'42"
8	15°46'46"

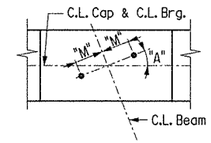

"M" = 12¼"

TYPICAL ANCHOR BOLT LAYOUT
No Scale

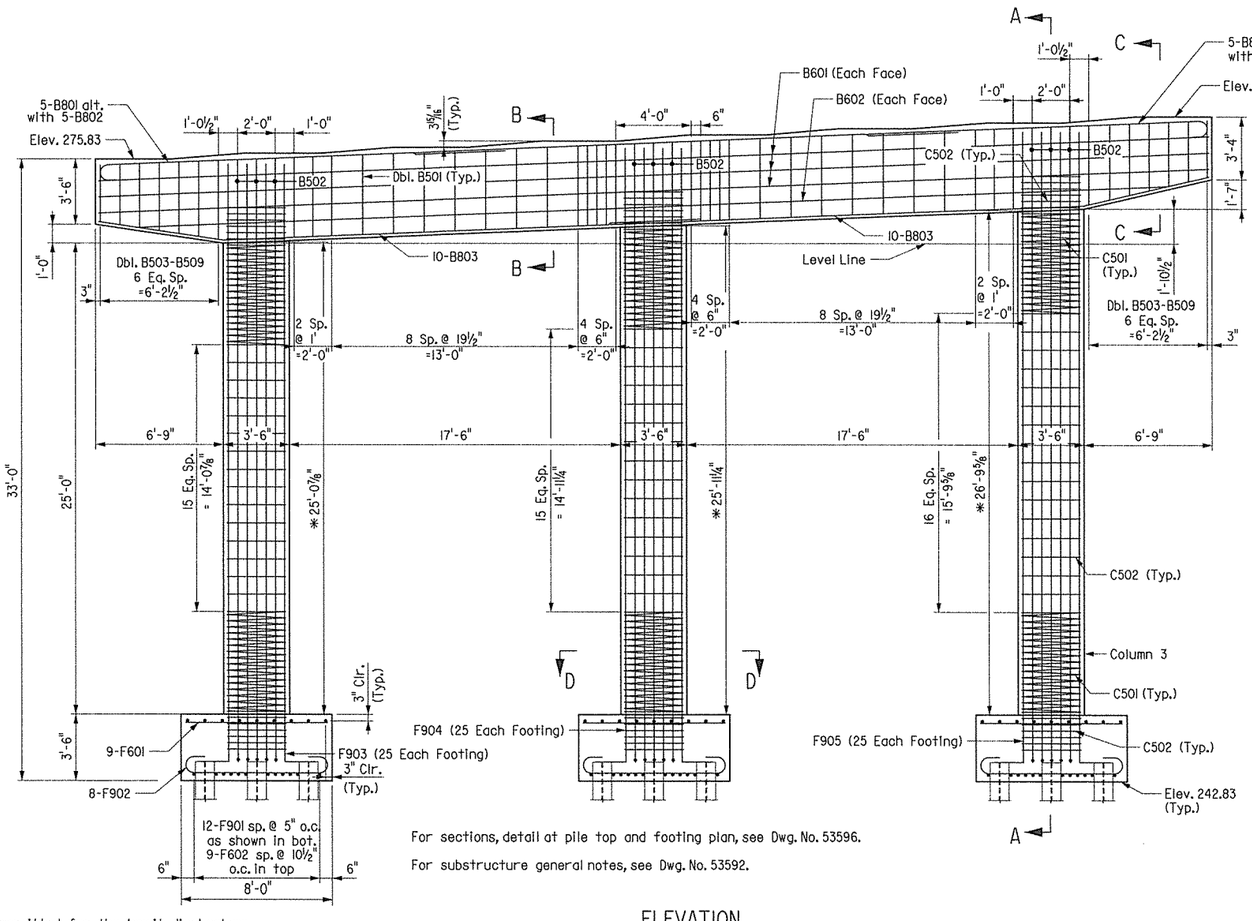

For sections, detail at pile top and footing plan, see Dwg. No. 53596.

For substructure general notes, see Dwg. No. 53592.

ELEVATION
¼" = 1'-0"
(Looking Ahead)

*Measured along C.L. of column

Minimum Lap Splice Lengths:
#8 Bar: 4'-9"
#6 Bar: 3'-7"

Lapped splices will not be permitted for the longitudinal column reinforcing. The Contractor may submit a request to the Engineer for approval to use mechanical couplers at mid-height of the column. All work and materials to use mechanical couplers will not be paid for directly but will be considered subsidiary to the item "Reinforcing Steel - Bridge (Grade 60)".

BAR LIST

Mark	Number Required	Dim. "A"	Length	Bar Dia.
B501	60	--	13'-7"	2½"
B502	9	--	11'-10"	2½"
B503 to B509	4 ea.	--	11'-4" to 13'-9"	2½"
B601	6	--	58'-8"	Str.
B602	2	--	54'-5"	Str.
B801	10	21'-3"	22'-2"	6"
B802	10	42'-3"	43'-2"	6"
B803	20	--	31'-11"	6"
C501	6	--	183'-8"	Spiral
C502	91	--	12'-2"	3¾"
F601	27	--	7'-6"	Str.
F602	27	--	9'-6"	Str.
F603	36	--	2'-10"	4½"
F901	36	9'-6"	12'-0"	9"
F902	24	7'-6"	10'-0"	9"
F903	25	31'-9"	33'-1"	9"
F904	25	32'-7"	33'-11"	9"
F905	25	33'-6"	34'-10"	9"

Bending Diagrams (Dimensions are out to out of bars.)

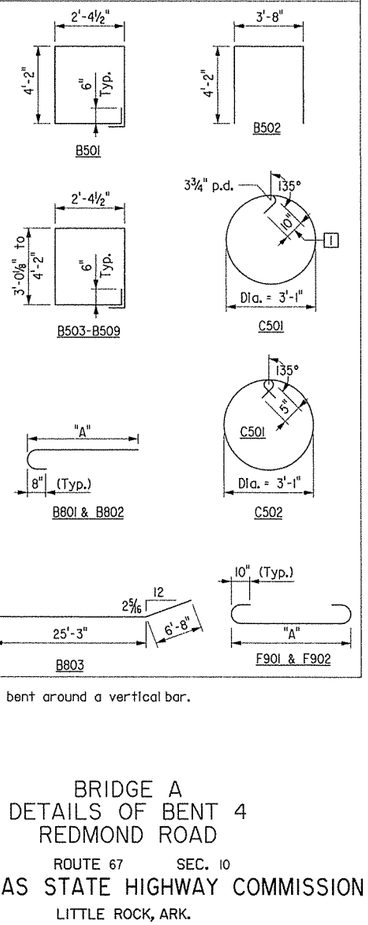

1 At each end of spiral. Hook may be field bent around a vertical bar.

STATE OF ARKANSAS
REGISTERED PROFESSIONAL ENGINEER
No. 11339
LARRY W. MILLER
8-19-13
BRIDGE ENGINEER

BRIDGE A
DETAILS OF BENT 4
REDMOND ROAD

ROUTE 67 SEC. 10

ARKANSAS STATE HIGHWAY COMMISSION
LITTLE ROCK, ARK.

DRAWN BY: AM DATE: 02-13
CHECKED BY: GS DATE: 03-01-13
DESIGNED BY: LM DATE: 01-13
FILENAME: b061276al_b4l.dgn
SCALE: As Shown

BRIDGE NO. A7282 DRAWING NO. 53595

DATE REVISED	DATE FILMED	DATE REVISED	DATE FILMED	FED. ROAD DIST. NO.	STATE	FED. AID PROJ. NO.	SHEET NO.	TOTAL SHEETS
				6	ARK.			
				JOB NO.		061276	191	438
				(1) A7282		INTERIOR BENT DETAILS		53596

NOTES FOR SPIRAL REINFORCING

Spiral reinforcing shall be plain round or deformed steel bars meeting the requirements of AASHTO M31 or M322 Type A (Grade 60) or shall be cold drawn wire meeting the requirements of AASHTO M32 or M225 (Grade 70) with a minimum diameter of 0.625".

Spiral reinforcement shall be paid for at the contract unit price bid per pound for "Reinforcing Steel-Bridge (Grade 60)". No additional payment shall be made for spacers, additional splices, or bracing needed for assembly, shipping, handling, or erecting.

Ends of spirals shall be terminated with 1½ turns and a 135° hook with a 10" tail around a vertical bar.

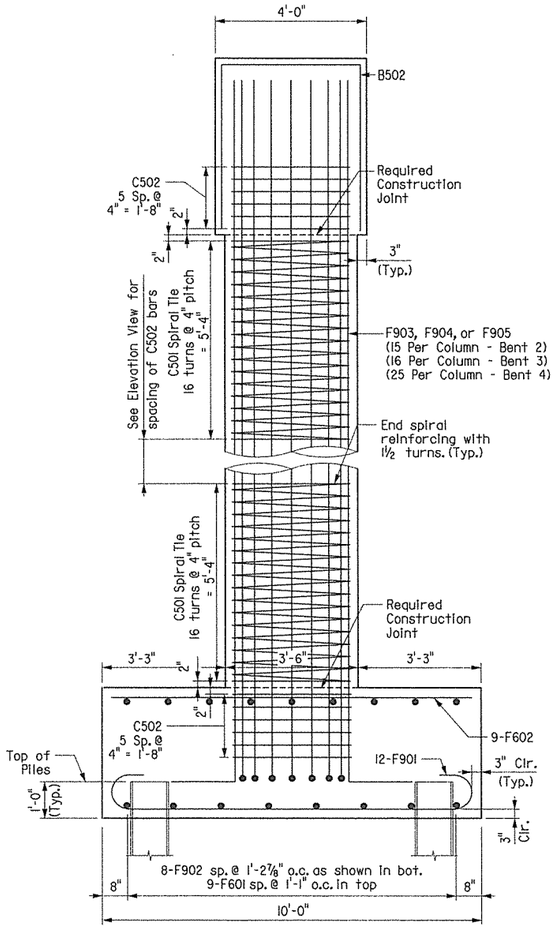

SECTION A-A

½" = 1'-0"

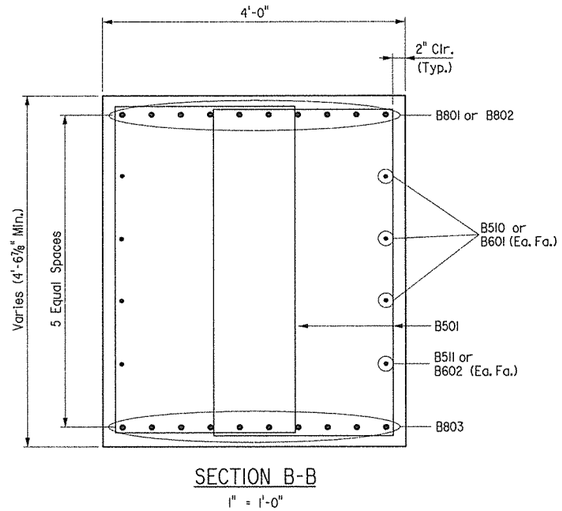

SECTION B-B

1" = 1'-0"

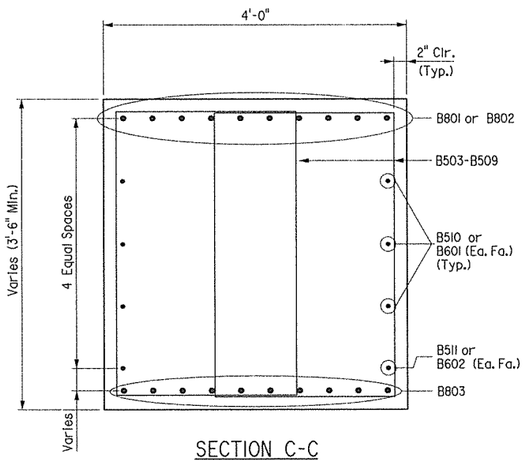

SECTION C-C

1" = 1'-0"

Minimum Lap Splice Lengths:
#8 Bar: 4'-9"
#6 Bar: 3'-7"

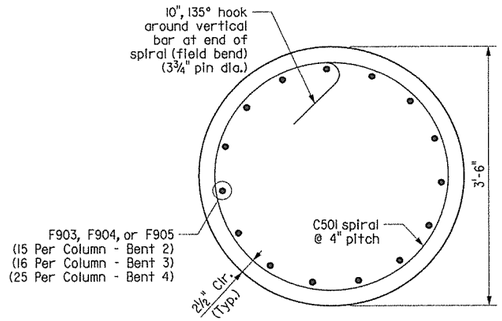

SECTION D-D

1" = 1'-0"

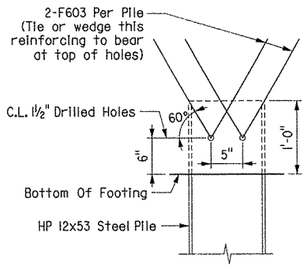

DETAIL AT PILE TOP

No Scale

Drilled holes will not be paid for directly but shall be considered incidental to the item "STEEL PILING (HP12x53)".

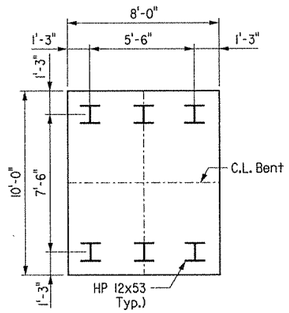

FOOTING PLAN

¼" = 1'-0"

STATE OF ARKANSAS
REGISTERED PROFESSIONAL ENGINEER
No. 10359
3-24-14
LARRY W. MILLER
BRIDGE ENGINEER

BRIDGE A
COMMON INTERIOR BENT DETAILS
REDMOND ROAD

ROUTE 67 SEC. 10

ARKANSAS STATE HIGHWAY COMMISSION

LITTLE ROCK, ARK.

DRAWN BY: AM DATE: 02-13 FILENAME: b061276al_b42.dgn
CHECKED BY: GS DATE: 03-01-13 SCALE: As Shown
DESIGNED BY: LM DATE: 01-13

BRIDGE NO. A7282 DRAWING NO. 53596

NOTE: Class I Protective Surface Treatment shall be applied to the roadway face and top of the end bent rail and the top of the backwall.

* Dimension shown are to C.L. Joint

** Measured Along Gutterline

DATE REVISED	DATE FILMED	DATE REVISED	DATE FILMED

FED. ROAD DIST. NO.	STATE	FED. AID PROJ. NO.	SHEET NO.	TOTAL SHEETS
6	ARK.			
JOB NO.		061276	192	438
① A7282		END BENT DETAILS		53597

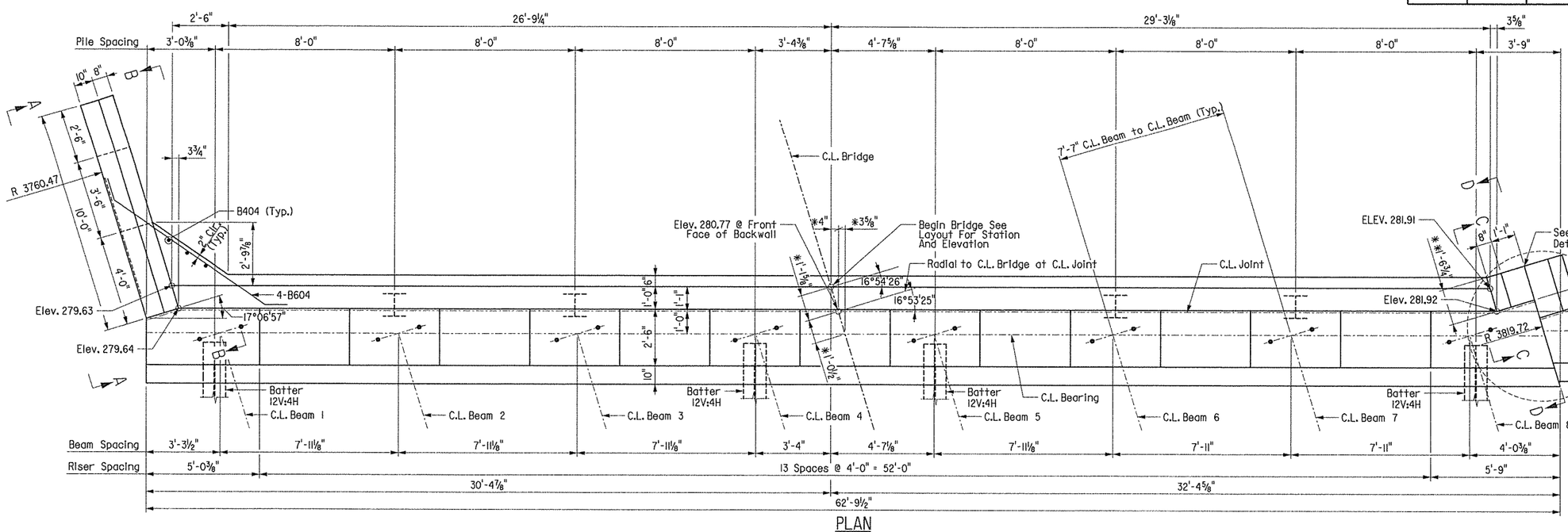

BEAM	"A"
1	16°59'53"
2	16°57'46"
3	16°55'40"
4	16°53'34"
5	16°51'29"
6	16°49'24"
7	16°47'20"
8	16°45'16"

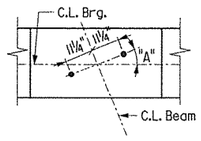

TYPICAL ANCHOR BOLT LAYOUT
No Scale

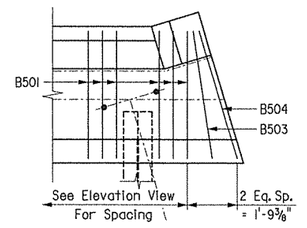

DETAIL "A"
Scale: ⅜" = 1'-0"

4 Spa. @ 6" = 2'-0"
B403 (B.F.) & B603 (F.F.)

① Adjust spacing of D601E bars as necessary to provide 3" clear from the longitudinal construction joint between the approach slab and gutters.

B403 - 106 Spaces @ 6" = 53'-0" (Back Face)
B603 - 106 Spaces @ 6" = 53'-0" (Front Face)

① D601E - 55 Spaces @ 1'-0" = 55'-0"

② Adjust as necessary to provide 2" clear to end of cap and outside face of wing.

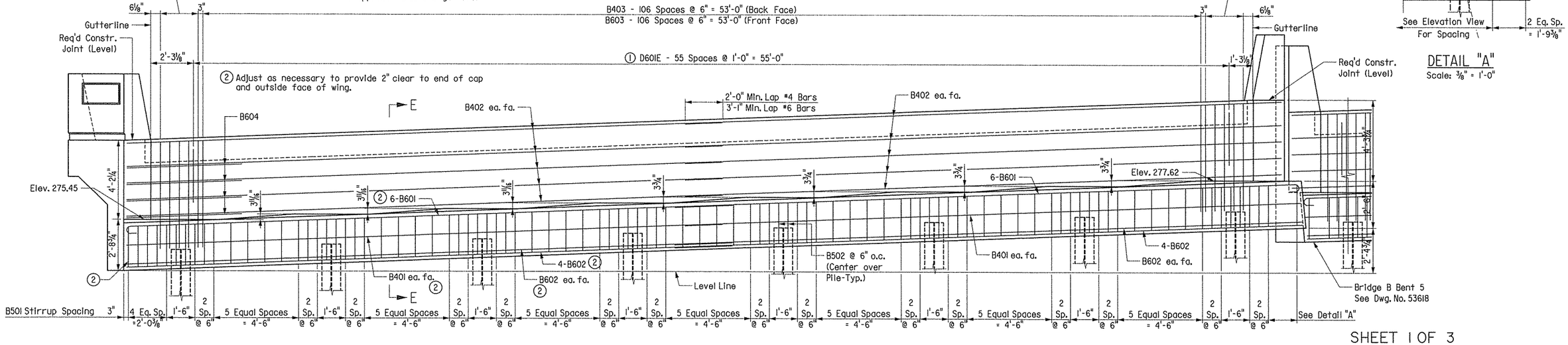

ELEVATION
⅜" = 1'-0"
(Looking Ahead)

For GENERAL NOTES FOR SUBSTRUCTURE and Detail at Pile Top, see Dwg. No. 53592.

For VIEW A-A, VIEW B-B, VIEW C-C and VIEW D-D, see Dwg. Nos. 53598 & 53599.

For additional information, see LAYOUT on Dwg. No. 53582

For Details of Wing and Rail, see Dwg. No. 53592.

For Bar List, see Dwg. No. 53599.

STATE OF ARKANSAS
Larry W. Miller
REGISTERED PROFESSIONAL ENGINEER
No. 11339
8-19-13
LARRY W. MILLER
BRIDGE ENGINEER

SHEET 1 OF 3
BRIDGE A
DETAILS OF BENT 5
REDMOND ROAD

ROUTE 67 SEC. 10

ARKANSAS STATE HIGHWAY COMMISSION
LITTLE ROCK, ARK.

DRAWN BY: BEG DATE: 2-13
CHECKED BY: GS DATE: 03-01-13
DESIGNED BY: BEG DATE: 2-13
FILENAME: b061276al_b51.dgn
SCALE: As Shown

BRIDGE NO. A7282 DRAWING NO. 53597

DATE REVISED	DATE FILMED	DATE REVISED	DATE FILMED	FED. ROAD DIST. NO.	STATE	FED. AID PROJ. NO.	SHEET NO.	TOTAL SHEETS
				6	ARK.			
				JOB NO.		061276	193	438
				(1) A7282		END BENT DETAILS		53598

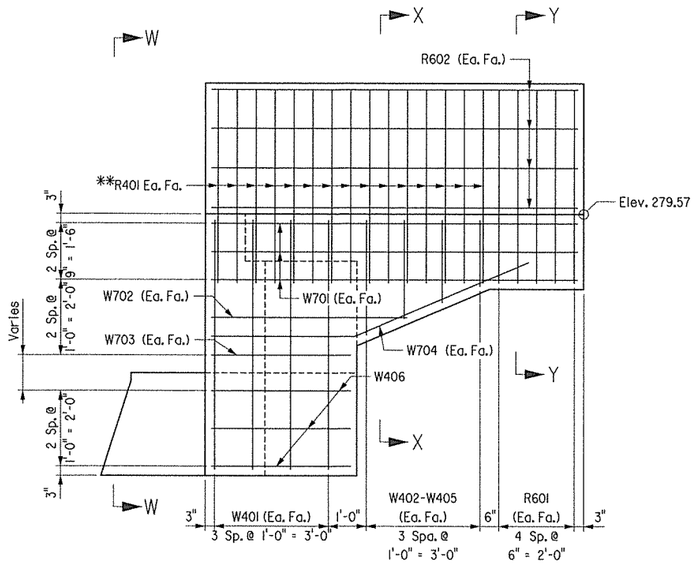

VIEW B-B
Scale: ½" = 1'-0"

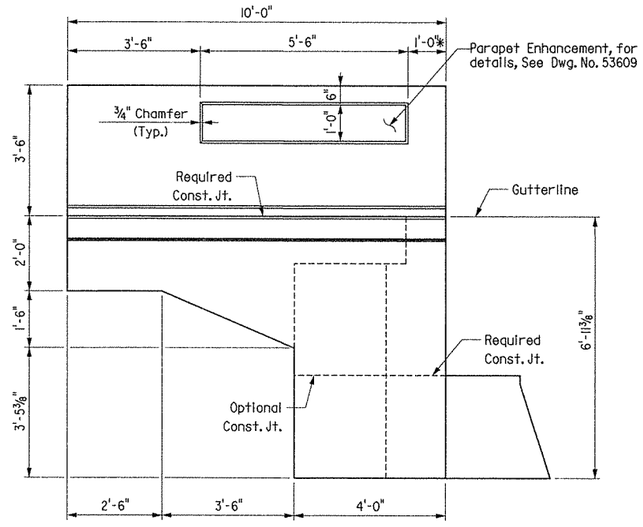

VIEW A-A
Scale: ½" = 1'-0"

** Bend R401 in field as necessary to match rail face. Pin Dia. = 4".

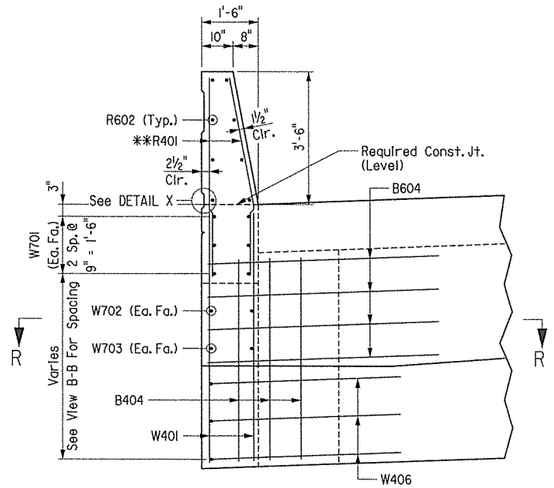

VIEW W-W
Scale: ½" = 1'-0"

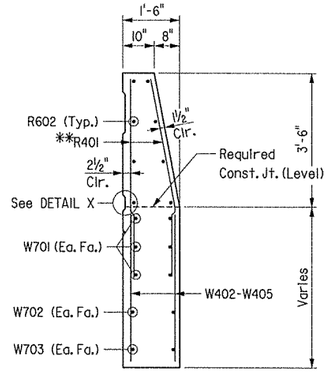

SECTION X-X
Scale: ½" = 1'-0"

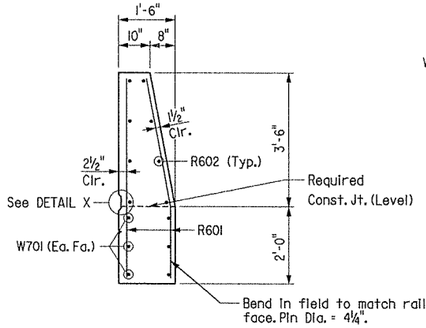

SECTION Y-Y
Scale: ½" = 1'-0"

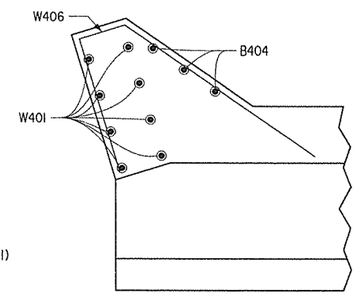

SECTION R-R
Scale: ½" = 1'-0"

For GENERAL NOTES FOR SUBSTRUCTURE, see Dwg. No. 53592.

For "DETAIL X", see Dwg. No. 53592.

For additional information, see LAYOUT on Dwg. No. 53582.

For Bar List, see Dwg. No. 53599.

STATE OF ARKANSAS
REGISTERED PROFESSIONAL ENGINEER
No. 11339
LARRY W. MILLER
8-19-13
BRIDGE ENGINEER

SHEET 2 OF 3
BRIDGE A
DETAILS OF BENT 5
REDMOND ROAD

ROUTE 67 SEC. 10

ARKANSAS STATE HIGHWAY COMMISSION
LITTLE ROCK, ARK.

DRAWN BY: BEG DATE: 2-13
CHECKED BY: GS DATE: 03-01-13
DESIGNED BY: BEG DATE: 2-13
FILENAME: b061276al_b52.dgn
SCALE: As Shown

BRIDGE NO. A7282 DRAWING NO. 53598

DATE REVISED	DATE FILMED	DATE REVISED	DATE FILMED	FED. ROAD DIST. NO.	STATE	FED. AID PROJ. NO.	SHEET NO.	TOTAL SHEETS
				6	ARK.			
				JOB NO.		061276	194	438
				(1) A7282		END BENT DETAILS		53599

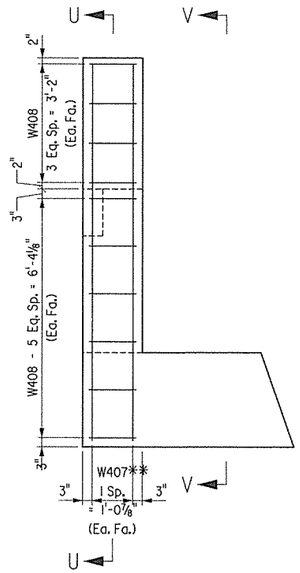

VIEW C-C
Scale: ½" = 1'-0"

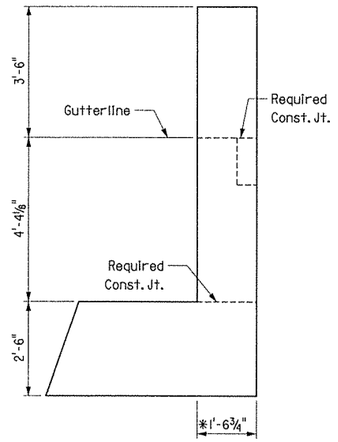

VIEW D-D
Scale: ½" = 1'-0"

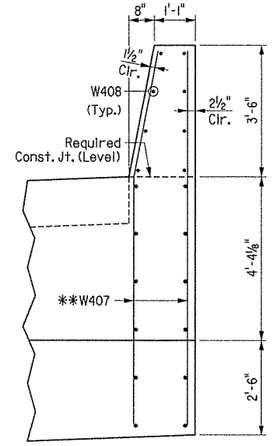

VIEW V-V
Scale: ½" = 1'-0"

Note: All bars designated with an "E" suffix are to be epoxy coated.

BAR LIST - BENT 5

Mark	No. Req'd	Length	Pin Dia.	BENDING DIAGRAMS (Dimensions are out to out of bars)
B401	4	32'-3"	Str.	
B402	20	31'-9"	Str.	
B403	117	4'-5"	Str.	
B404	3	5'-4"	Str.	
B501	78	12'-11"	2½"	
B502	16	7'-10"	2½"	
B503	1	13'-0"	2½"	
B504	1	13'-3"	2½"	
B601	12	33'-5"	4½"	
B602	12	32'-9"	Str.	
B603	117	8'-8"	4½"	
B604	4	10'-2"	4½"	
B605	16	2'-10"	4½"	
D601E	56	5'-11"	4½"	
R401	30	5'-2"	Str.	
R601	10	5'-2"	Str.	
R602	8	9'-8"	Str.	
W401	8	6'-7"	Str.	
W402 to W405	2 ea.	3'-0" to 1'-9"	Str.	
W406	3	10'-11"	3"	
W407	4	10'-0"	Str.	
W408	20	1'-3"	Str.	
W701	6	9'-8"	Str.	
W702	2	5'-2"	Str.	
W703	2	3'-8"	Str.	
W704	2	8'-9"	5¼"	

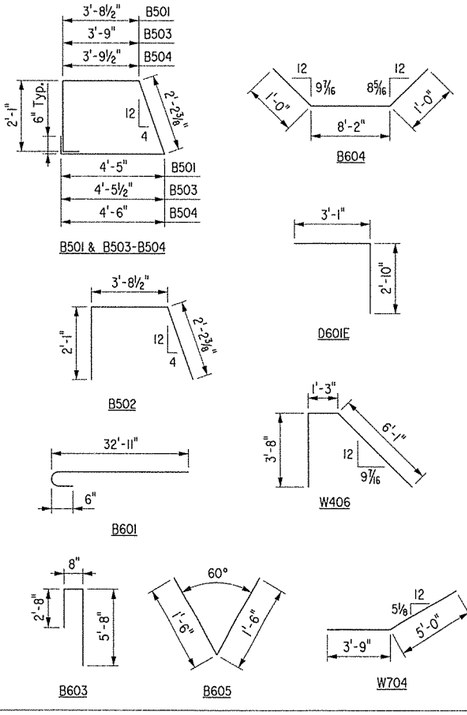

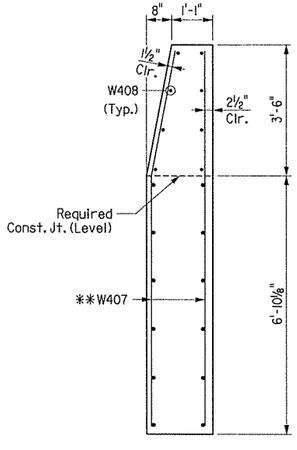

SECTION U-U
Scale: ½" = 1'-0"

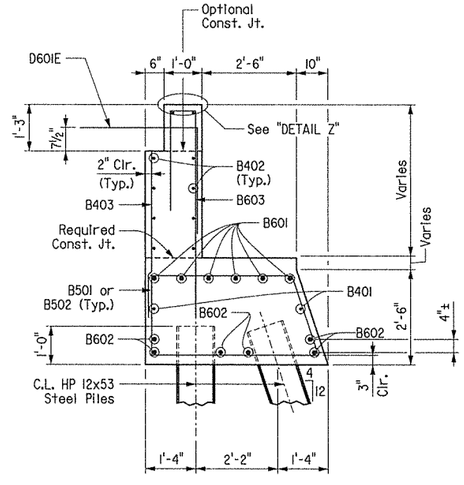

SECTION E-E
Scale: ½" = 1'-0"

* Measured along gutterline.

** Bend W407 In Field, As Necessary To Match Rail Face. Pin Dia. = 4".

For GENERAL NOTES FOR SUBSTRUCTURE, see Dwg. No. 53592.

For "DETAIL Z", see Dwg. No. 53592.

For additional information, see LAYOUT on Dwg. No. 53582.

STATE OF ARKANSAS
Larry W. Miller
REGISTERED PROFESSIONAL ENGINEER
No. 11339
8-19-13
LARRY W. MILLER
BRIDGE ENGINEER

SHEET 3 OF 3
BRIDGE A
DETAILS OF BENT 5
REDMOND ROAD

ROUTE 67 SEC. 10

ARKANSAS STATE HIGHWAY COMMISSION
LITTLE ROCK, ARK.

DRAWN BY: BEG DATE: 2-13
CHECKED BY: GS DATE: 03-01-13
DESIGNED BY: BEG DATE: 2-13
FILENAME: b061276al_b53.dgn
SCALE: As Shown

BRIDGE NO. A7282 DRAWING NO. 53599

DATE REVISED	DATE FILMED	DATE REVISED	DATE FILMED	FED. ROAD DIST. NO.	STATE	FED. AID PROJ. NO.	SHEET NO.	TOTAL SHEETS
				6	ARK.			
				JOB NO.		061276	195	438
				(1) A7282		SPAN DETAILS		53600

NOTES:

One Epoxy Coated #5 bar in the top and one Epoxy Coated #5 bar in the bottom may be substituted for each bar S502E. Payment will be based on the weight of bars S502E.

Class I Protective Surface Treatment shall be applied to the roadway surface and the top and roadway face of railing.

All bars designated with an "E" suffix are to be epoxy coated.

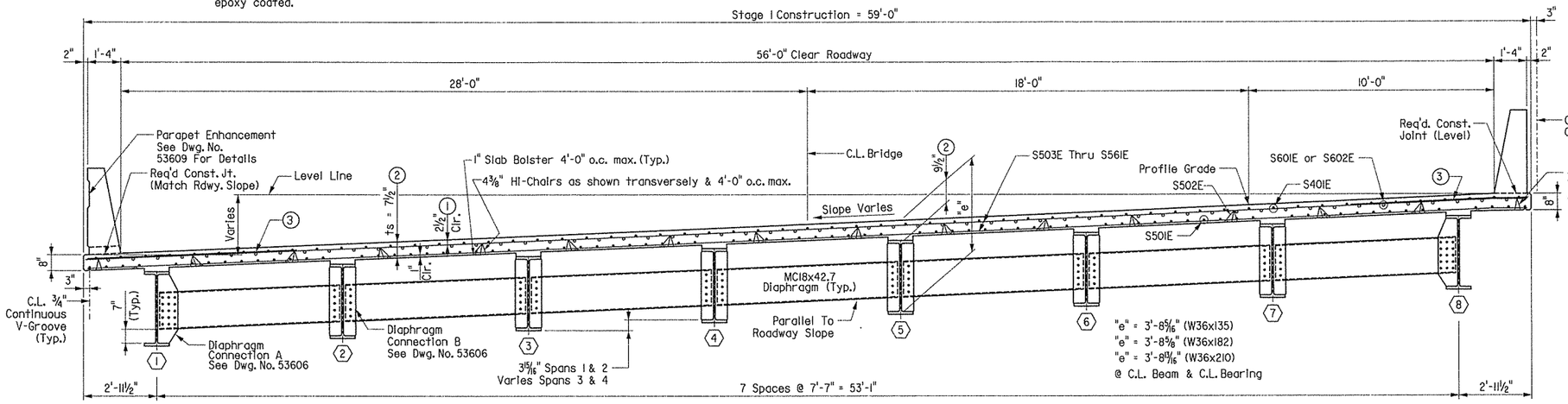

TYPICAL SECTION

(Looking Ahead)
Scale: ⅜" = 1'-0"

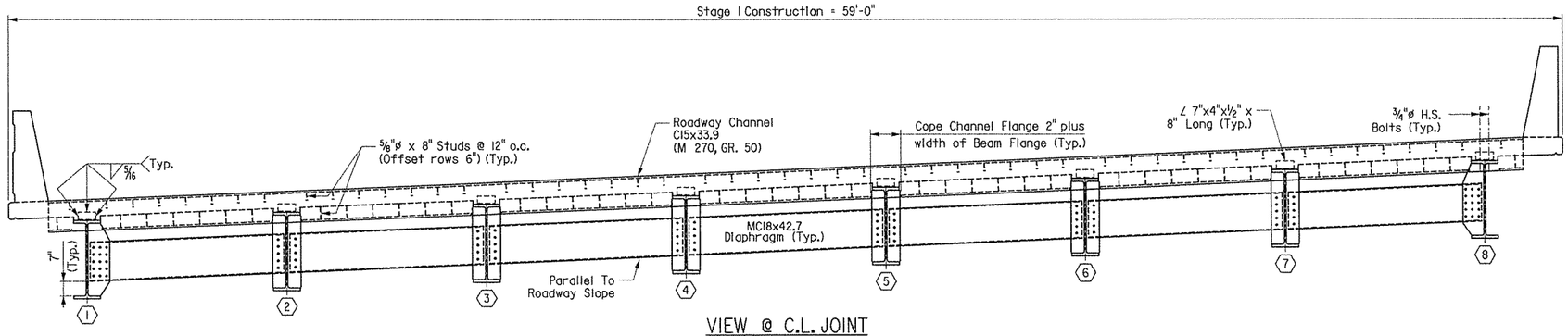

VIEW @ C.L. JOINT

(Looking Ahead)
Scale: ⅜" = 1'-0"

(1) TOLERANCE:
Minus: ¼"
Plus: Equal to amount of slab thickening used to meet slab thickness tolerance. See "ADJUSTMENT FOR SLAB THICKNESS TOLERANCE WHEN REMOVABLE DECK FORMING IS USED".

(2) See "ADJUSTMENT FOR SLAB THICKNESS TOLERANCE WHEN REMOVABLE DECK FORMING IS USED".

SLAB REINFORCING:

Transverse:
S503E @ 12" Centers (Top & Bottom)
S502E @ 12" Centers (Bent up over beams)
S504E-S561E @ 6" Centers (Top & Bottom)
(3) S701E (Place as shown)
See DETAIL A on Dwg. No. 53601
Longitudinal:
S401E @ 12" Centers (Top)
S501E as shown (Bottom)
S601E @ 12" Centers (Top over Bents 2 & 4)
S602E @ 12" Centers (Top over Bent 3)

For additional reinforcing details, see Dwg. No. 53601-53602, 53610.

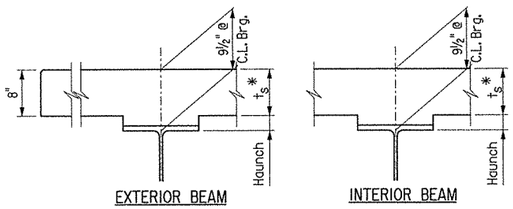

Note: ts = slab thickness as shown on "TYPICAL SECTION".
*Tolerance when removable deck forming is used is +½", -¼".
Haunch forming is required and shall be adjusted to maintain slab thickness tolerance.

ADJUSTMENT FOR SLAB THICKNESS TOLERANCE WHEN REMOVABLE DECK FORMING IS USED

No Scale

Haunch dimension may vary within the following limits to maintain the grade and slab thickness tolerance; Minimum - top flange thickness minus 5/16"; Maximum - top flange thickness plus 2¼". No increase in concrete and structural steel quantities will be made to maintain tolerances.

Tolerances shown are applicable only when removable deck forming is used. See Std. Dwg. No. 55005 for tolerances when permanent steel deck forms are used. Payment for concrete shall be based on removable deck forming.

EXPANSION DEVICE:

Roadway Channel C15x33.9 (M 270, Gr. 50) Connection L's 7"x4"x½" x 8" Long Detail Device ⅛" high & provide ¼" shims using 1 - ⅛" PL & 2 - 1/16" PL's

For additional details of Poured Silicone Joint, see Dwg. No. 53626.

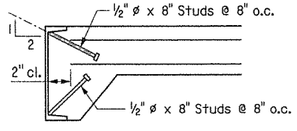

Note: As an alternate to ⅝" ø studs, ½" ø x 8" studs spaced as shown may be used. Use weight of ⅝" ø stud as basis of measurement of structural steel in anchors.

DETAIL OF ALTERNATE ANCHORS

No Scale

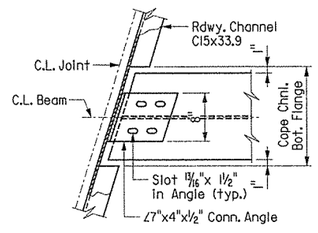

ROADWAY CHANNEL CONNECTION DETAIL

STATE OF ARKANSAS
LARRY W. MILLER
REGISTERED PROFESSIONAL ENGINEER
No. 11339
9-24-14

BRIDGE ENGINEER

BRIDGE A
SHEET 1 OF 5
DETAILS OF 280'-0" CONTINUOUS COMPOSITE W-BEAM UNIT
REDMOND ROAD

ROUTE 67 SEC. 10

ARKANSAS STATE HIGHWAY COMMISSION

LITTLE ROCK, ARK.

DRAWN BY: BEG DATE: 1-13 FILENAME: b061276a1 sl.dgn
CHECKED BY: GS DATE: 03-01-13 SCALE: ⅜" = 1'
DESIGNED BY: BEG DATE: 1-13

BRIDGE NO. A7282 DRAWING NO. 53600

DATE REVISED	DATE FILMED	DATE REVISED	DATE FILMED

FED. ROAD DIST. NO.	STATE	FED. AID PROJ. NO.	SHEET NO.	TOTAL SHEETS
6	ARK.			
JOB NO.		061276	196	438
(1) A7282		SPAN DETAILS		53601

(F) C.L. Full Depth Parapet Joint (¼" to 1" max.). Stop 4" from top of slab.

(P) C.L. Partial Depth Parapet Joint (¼" to 1" max.). Stop 1'-6" from top of slab.

(A) 24 Spa. @ 6" = 12'-0"
S504E-S528E (Top & Bottom)

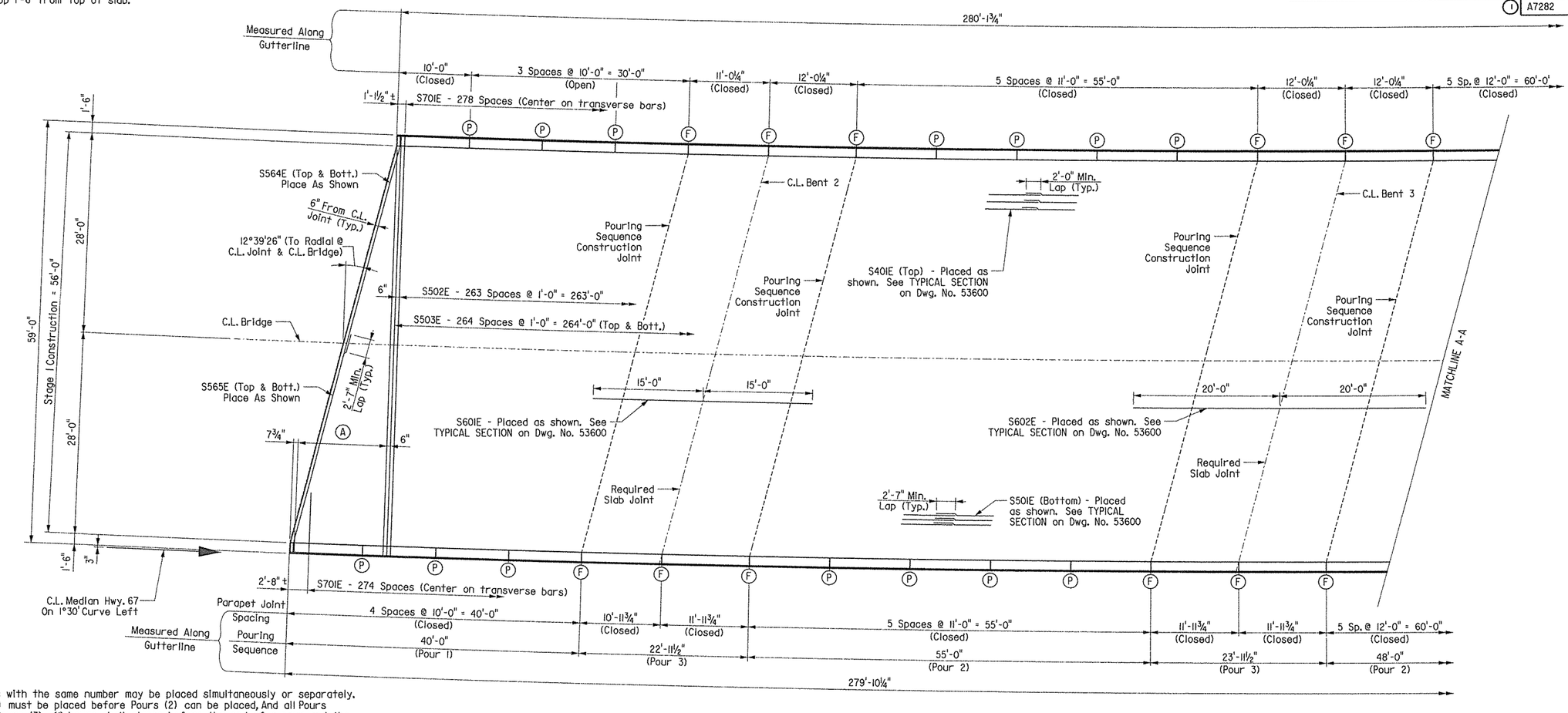

SLAB PLAN

Scale: ⅛" = 1'-0"

Note: Pours with the same number may be placed simultaneously or separately. All Pours (1) must be placed before Pours (2) can be placed, And all Pours (2) before Pours (3). 48 hours shall elapse before the end of a pour and the start of the next pour. 72 hours shall elapse between the end of a pour and the start of an adjacent pour.
72 hours shall elapse between the completion of the entire deck and the pouring of the parapet. Any railing pours made before the entire slab unit has been placed must be approved by the Engineer.

The Contractor must obtain approval from the Engineer for any deviations from the pouring sequence shown.

Concrete in bridge superstructure shall be consolidated for the entire pour before any concrete has taken its initial set. This may require the use of a retarding agent.

Note: Required slab joints and pouring sequence CONSTRUCTION joints shall align with parapet open joint at the gutterline.

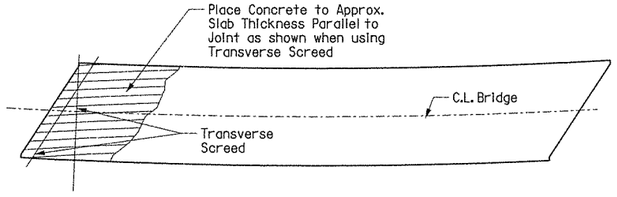

Note: At the Contractor's option, the Transverse Screed may be placed parallel to the skew or perpendicular to C.L. Bridge

CONCRETE PLACEMENT PROCEDURE

No Scale

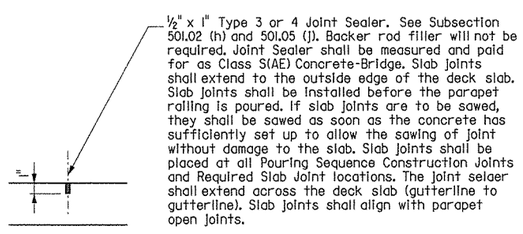

SLAB JOINT DETAIL

No Scale

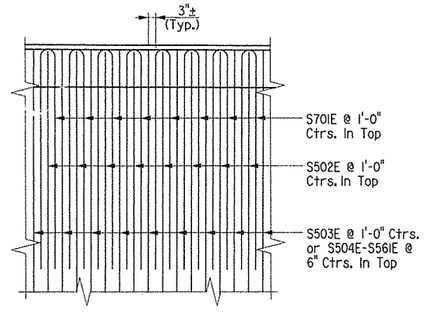

DETAIL A

Scale: ⅜" = 1'-0"

Note: See TYPICAL SECTION on Dwg. No. 53600 for placement of longitudinal reinforcing.

Note: For Bar List, see Dwg. No. 53610.

Note: All transverse reinforcing steel shall be placed on radial lines. Spacing is measured along C.L. Bridge, unless noted otherwise.

Note: All longitudinal lines and longitudinal reinforcing steel shall be placed on curves concentric with C.L. Median.

Note: For Parapet Details See Dwg. Nos. 53607-53609

STATE OF ARKANSAS
REGISTERED PROFESSIONAL ENGINEER
No. 13339
3-24-14
LARRY W. MILLER
BRIDGE ENGINEER

BRIDGE A
SHEET 2 OF 5
DETAILS OF 280'-0" CONTINUOUS COMPOSITE W-BEAM UNIT
REDMOND ROAD

ROUTE 67 SEC. 10

ARKANSAS STATE HIGHWAY COMMISSION

LITTLE ROCK, ARK.

DRAWN BY: BEG DATE: 1-13
CHECKED BY: GS DATE: 03-01-13
DESIGNED BY: BEG DATE: 1-13
FILENAME: b061276a1_s2.dgn
SCALE: As Shown

BRIDGE NO. A7282 DRAWING NO. 53601

(F) C.L. Full Depth Parapet Joint (¼" to 1" max.). Stop 4" from top of slab.

(P) C.L. Partial Depth Parapet Joint (¼" to 1" max.). Stop 1'-6" from top of slab.

DATE REVISED	DATE FILMED	DATE REVISED	DATE FILMED

FED. ROAD DIST. NO.	STATE	FED. AID PROJ. NO.	SHEET NO.	TOTAL SHEETS
6	ARK.			
JOB NO.		061276	197	438
(I) A7282		SPAN DETAILS		53602

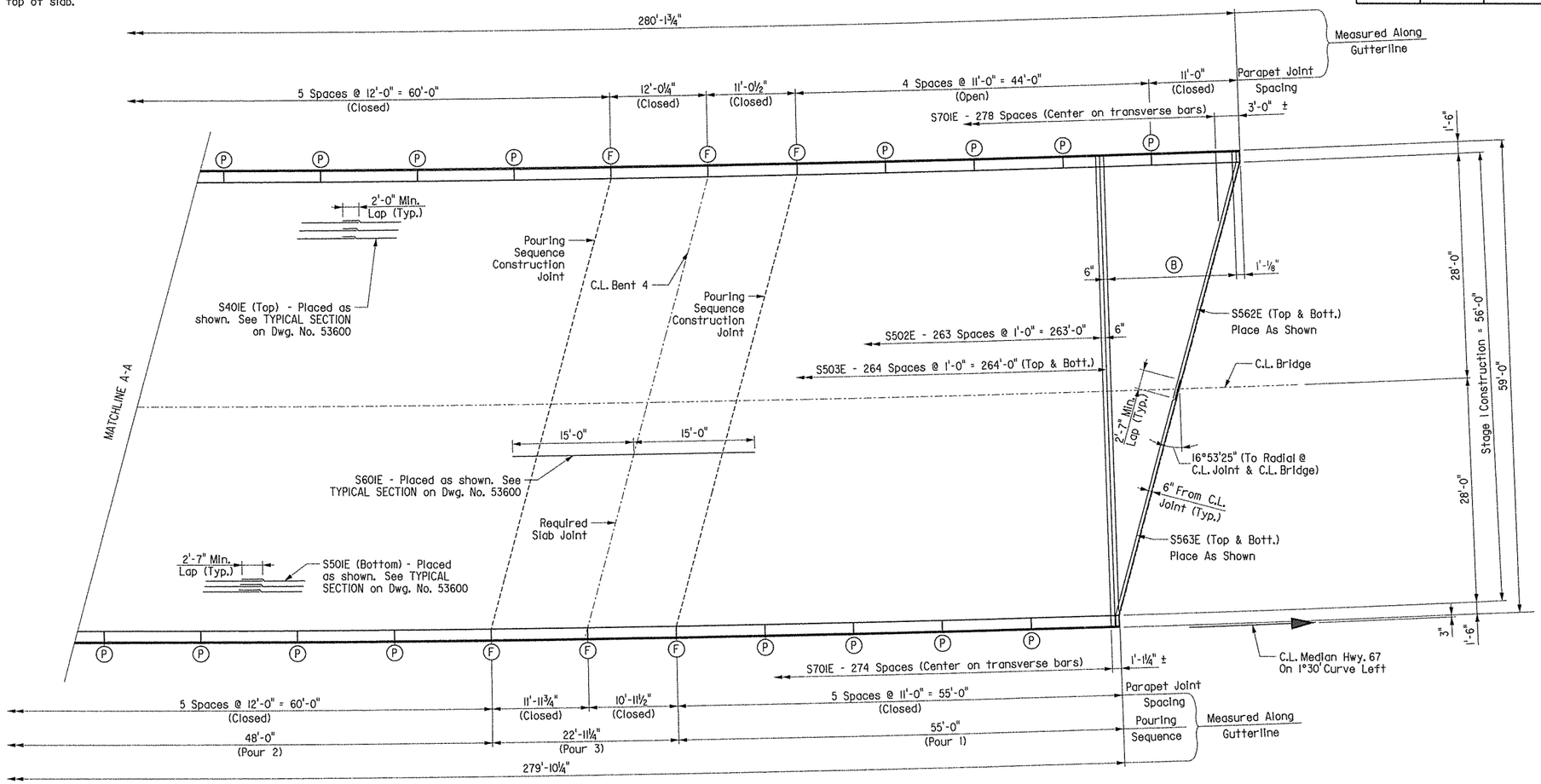

(B) 32 Spa. @ 6" = 16'-0"
S529E-S561E (Top & Bottom)

SLAB PLAN

Scale: ⅛" = 1'-0"

Note: See TYPICAL SECTION on Dwg. No. 53600 for placement of longitudinal reinforcing.

Note: For Bar List, see Dwg. No. 53610.

Note: All transverse reinforcing steel shall be placed on radial lines. Spacing is measured along C.L. Bridge, unless noted otherwise.

Note: All longitudinal lines and longitudinal reinforcing steel shall be placed on curves concentric with C.L. Median.

Note: For Parapet Details, See Dwg. Nos. 53607-63609.

STATE OF ARKANSAS
REGISTERED PROFESSIONAL ENGINEER
No. 11339
LARRY W. MILLER
8-19-13
BRIDGE ENGINEER

BRIDGE A
SHEET 3 OF 5
DETAILS OF 280'-0" CONTINUOUS COMPOSITE W-BEAM UNIT
REDMOND ROAD

ROUTE 67 SEC. 10

ARKANSAS STATE HIGHWAY COMMISSION

LITTLE ROCK, ARK.

DRAWN BY: BEG DATE: 1-13
CHECKED BY: GS DATE: 03-01-13
DESIGNED BY: BEG DATE: 1-13
FILENAME: b061276al_s3.dgn
SCALE: As Shown

BRIDGE NO. A7282 DRAWING NO. 53602

DATE REVISED	DATE FILMED	DATE REVISED	DATE FILMED	FED. ROAD DIST. NO.	STATE	FED. AID PROJ. NO.	SHEET NO.	TOTAL SHEETS
				6	ARK.			
				JOB NO.		061276	198	438
				(1) A7282		SPAN DETAILS		53603

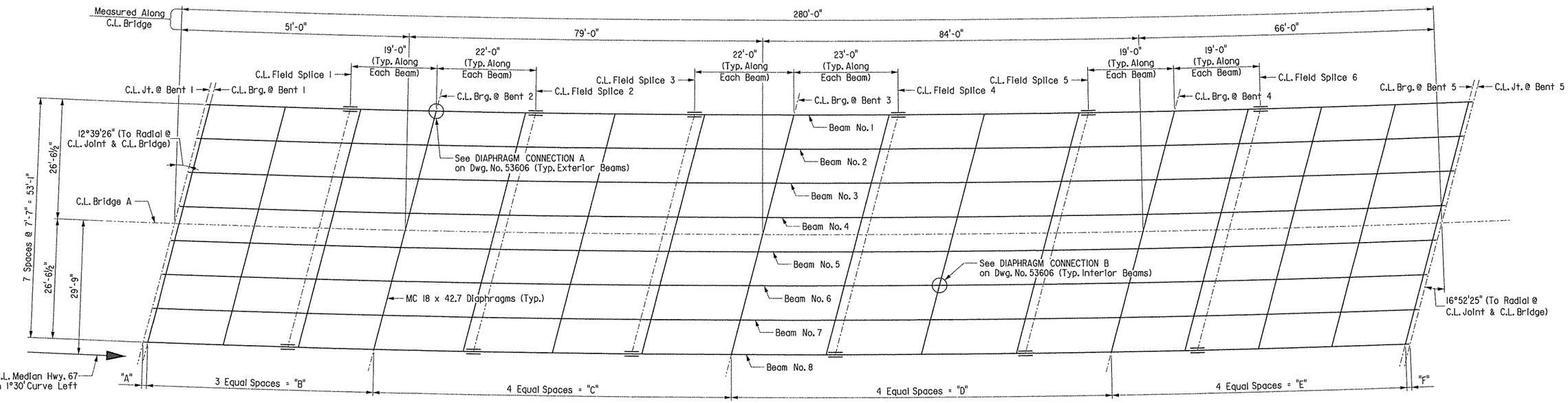

FRAMING PLAN

Scale: ⅛" = 1'-0"

TABLE OF VARIABLES

Beam No.	1	2	3	4	5	6	7	8
"A"	1'-0 5/16"	1'-0 5/16"	1'-0 5/16"	1'-0 5/16"	1'-0 5/16"	1'-0 5/16"	1'-0 5/16"	1'-0 5/16"
"B"	49'-11 15/16"	49'-11 7/8"	49'-11 11/16"	49'-11 3/4"	49'-11 11/16"	49'-11 5/8"	49'-11 9/16"	49'-11 1/2"
"C"	79'-0 7/16"	79'-0 5/16"	79'-0 3/16"	79'-0 1/16"	78'-11 15/16"	78'-11 13/16"	78'-11 11/16"	78'-11 9/16"
"D"	84'-0 1/2"	84'-0 3/8"	84'-0 1/4"	84'-0 1/16"	83'-11 15/16"	83'-11 3/4"	83'-11 5/8"	83'-11 1/2"
"E"	64'-11 15/16"	64'-11 13/16"	64'-11 11/16"	64'-11 1/2"	64'-11 3/8"	64'-11 1/4"	64'-11 1/8"	64'-11"
"F"	1'-0 9/16"	1'-0 9/16"	1'-0 9/16"	1'-0 9/16"	1'-0 9/16"	1'-0 9/16"	1'-0 9/16"	1'-0 9/16"
"G"	0'-1 3/8"	0'-1 3/8"	0'-1 3/8"	0'-1 3/8"	0'-1 3/8"	0'-1 3/8"	0'-1 5/16"	0'-1 5/16"
"H"	1'-1 5/16"	1'-1 5/16"	1'-1 5/16"	1'-1 5/16"	1'-1 5/16"	1'-1 5/16"	1'-1 7/16"	1'-1 5/16"
"J"	0'-1 13/16"	0'-1 13/16"	0'-1 13/16"	0'-1 13/16"	0'-1 13/16"	0'-1 13/16"	0'-1 13/16"	0'-1 13/16"
"K"	1'-1 5/8"	1'-1 9/16"	1'-1 9/16"	1'-1 9/16"	1'-1 9/16"	1'-1 9/16"	1'-1 9/16"	1'-1 9/16"

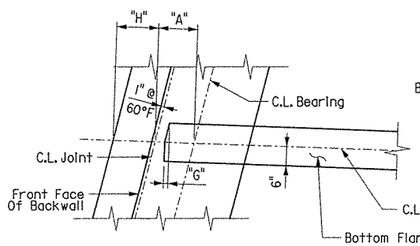

BEARING PLAN @ END BENT 1

Scale: ½" = 1'-0"

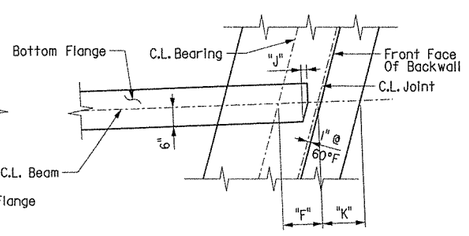

BEARING PLAN @ END BENT 4

Scale: ½" = 1'-0"

NOTES:

All longitudinal dimensions are taken along C.L. Beam, U.N.O.

Beams are curved and concentric to C.L. Median. All Diaphragms are parallel to bents, U.N.O.

For BEAM ELEVATION, see Dwg. No. 53605.

For FIELD SPLICE DETAILS, see Dwg. No. 53606.

For DIAPHRAGM DETAILS, see Dwg. No. 53606.

STATE OF ARKANSAS
REGISTERED PROFESSIONAL ENGINEER
No. 13339
LARRY W. MILLER
8-19-13
BRIDGE ENGINEER

BRIDGE A
SHEET 4 OF 5
DETAILS OF 280'-0" CONTINUOUS COMPOSITE W-BEAM UNIT
REDMOND ROAD

ROUTE 67 SEC. 10

ARKANSAS STATE HIGHWAY COMMISSION

LITTLE ROCK, ARK.

DRAWN BY: BEG DATE: 1-13
CHECKED BY: GS DATE: 03-01-13
DESIGNED BY: BEG DATE: 1-13

FILENAME: b061276a1_s4.dgn
SCALE: As Shown

BRIDGE NO. A7282 DRAWING NO. 53603

DATE REVISED	DATE FILMED	DATE REVISED	DATE FILMED	FED. ROAD DIST. NO.	STATE	FED. AID PROJ. NO.	SHEET NO.	TOTAL SHEETS
				6	ARK.			
				JOB NO.		061276	199	438
				(1) A7282		SPAN DETAILS		53604

TABLE OF DEAD LOAD DEFLECTIONS (INCHES)

Camber for Dead Load Deflection plus vertical curve +/- ¼" tolerance. Vertical curve corrections not included. Negative sign (-) indicates upward deflection.
Deflections shown are along the centerline beam from the plane perpendicular to the web extending from centerline bearing to centerline bearing.

	POINT OF DEFLECTION	Structural Steel								Structural Steel (+) Slab								Structural Steel (+) Slab (+) Parapet Rail							
		Beam 1	Beam 2	Beam 3	Beam 4	Beam 5	Beam 6	Beam 7	Beam 8	Beam 1	Beam 2	Beam 3	Beam 4	Beam 5	Beam 6	Beam 7	Beam 8	Beam 1	Beam 2	Beam 3	Beam 4	Beam 5	Beam 6	Beam 7	Beam 8
SPAN NO. 1	1.00	0.000	0.000	0.000	0.000	0.000	0.000	0.000	0.000	0.000	0.000	0.000	0.000	0.000	0.000	0.000	0.000	0.000	0.000	0.000	0.000	0.000	0.000	0.000	0.000
	1.10	0.009	0.010	0.010	0.010	0.010	0.010	0.010	0.010	0.056	0.061	0.063	0.063	0.063	0.063	0.061	0.057	0.059	0.064	0.066	0.066	0.066	0.066	0.064	0.060
	1.20	0.016	0.017	0.017	0.017	0.017	0.017	0.017	0.016	0.097	0.106	0.109	0.109	0.109	0.109	0.106	0.097	0.102	0.111	0.114	0.114	0.114	0.114	0.111	0.102
	1.30	0.021	0.022	0.022	0.022	0.022	0.022	0.022	0.021	0.124	0.136	0.139	0.138	0.138	0.138	0.135	0.124	0.130	0.142	0.145	0.144	0.144	0.144	0.141	0.131
	1.40	0.022	0.023	0.023	0.023	0.023	0.023	0.023	0.022	0.130	0.142	0.146	0.145	0.145	0.146	0.142	0.131	0.137	0.149	0.153	0.152	0.152	0.153	0.149	0.138
	1.50	0.019	0.020	0.020	0.020	0.020	0.020	0.020	0.019	0.114	0.125	0.128	0.128	0.128	0.128	0.125	0.115	0.120	0.131	0.134	0.134	0.134	0.134	0.131	0.121
	1.60	0.014	0.015	0.015	0.015	0.015	0.015	0.014	0.014	0.083	0.092	0.095	0.094	0.094	0.094	0.091	0.083	0.087	0.096	0.099	0.098	0.098	0.098	0.095	0.087
	1.70	0.006	0.007	0.007	0.007	0.007	0.007	0.007	0.006	0.039	0.045	0.047	0.045	0.045	0.046	0.045	0.039	0.041	0.047	0.049	0.047	0.047	0.048	0.047	0.041
	1.80	0.000	0.000	0.000	0.000	0.000	0.000	0.000	0.000	0.002	0.004	0.004	0.003	0.003	0.004	0.004	0.002	0.002	0.004	0.004	0.003	0.003	0.004	0.004	0.002
	1.90	-0.003	-0.003	-0.003	-0.003	-0.003	-0.003	-0.003	-0.003	-0.016	-0.016	-0.017	-0.017	-0.017	-0.017	-0.016	-0.017	-0.017	-0.017	-0.018	-0.018	-0.018	-0.018	-0.017	-0.018
SPAN NO. 2	2.00	0.000	0.000	0.000	0.000	0.000	0.000	0.000	0.000	0.000	0.000	0.000	0.000	0.000	0.000	0.000	0.000	0.000	0.000	0.000	0.000	0.000	0.000	0.000	0.000
	2.10	0.023	0.024	0.024	0.024	0.024	0.024	0.024	0.024	0.134	0.142	0.145	0.147	0.147	0.145	0.142	0.137	0.141	0.149	0.152	0.154	0.154	0.152	0.149	0.144
	2.20	0.057	0.059	0.059	0.059	0.059	0.059	0.059	0.058	0.330	0.349	0.358	0.361	0.361	0.357	0.349	0.333	0.348	0.367	0.376	0.379	0.379	0.375	0.367	0.351
	2.30	0.090	0.092	0.093	0.094	0.094	0.093	0.092	0.091	0.519	0.548	0.563	0.568	0.568	0.562	0.548	0.524	0.547	0.576	0.591	0.596	0.595	0.590	0.576	0.553
	2.40	0.111	0.114	0.115	0.115	0.115	0.115	0.114	0.112	0.637	0.674	0.692	0.696	0.696	0.691	0.673	0.644	0.672	0.708	0.726	0.730	0.730	0.725	0.707	0.679
	2.50	0.114	0.117	0.119	0.119	0.119	0.119	0.117	0.115	0.655	0.692	0.711	0.716	0.716	0.711	0.692	0.661	0.691	0.727	0.746	0.751	0.751	0.746	0.727	0.697
	2.60	0.101	0.103	0.105	0.105	0.105	0.105	0.103	0.101	0.575	0.606	0.624	0.628	0.628	0.623	0.606	0.578	0.607	0.637	0.655	0.659	0.659	0.654	0.637	0.610
	2.70	0.074	0.076	0.077	0.077	0.077	0.077	0.076	0.074	0.420	0.444	0.456	0.458	0.458	0.455	0.445	0.421	0.443	0.467	0.479	0.481	0.481	0.478	0.468	0.445
	2.80	0.041	0.042	0.043	0.043	0.043	0.043	0.043	0.042	0.233	0.245	0.253	0.254	0.254	0.252	0.247	0.234	0.246	0.258	0.266	0.267	0.267	0.265	0.260	0.247
	2.90	0.013	0.013	0.013	0.013	0.013	0.013	0.013	0.013	0.073	0.077	0.078	0.079	0.079	0.078	0.077	0.073	0.077	0.081	0.082	0.083	0.083	0.082	0.081	0.077
	3.00	0.000	0.000	0.000	0.000	0.000	0.000	0.000	0.000	0.000	0.000	0.000	0.000	0.000	0.000	0.000	0.000	0.000	0.000	0.000	0.000	0.000	0.000	0.000	0.000
SPAN NO. 3	3.10	0.014	0.015	0.015	0.015	0.015	0.015	0.015	0.014	0.072	0.079	0.080	0.080	0.080	0.080	0.078	0.073	0.077	0.083	0.084	0.084	0.084	0.084	0.082	0.078
	3.20	0.046	0.047	0.047	0.047	0.047	0.047	0.047	0.046	0.243	0.257	0.263	0.265	0.265	0.263	0.256	0.243	0.258	0.271	0.277	0.279	0.279	0.277	0.270	0.258
	3.30	0.083	0.085	0.086	0.086	0.086	0.085	0.085	0.083	0.444	0.471	0.483	0.486	0.486	0.482	0.469	0.445	0.470	0.497	0.508	0.511	0.511	0.507	0.495	0.471
	3.40	0.113	0.115	0.116	0.116	0.116	0.116	0.115	0.113	0.608	0.643	0.660	0.664	0.664	0.659	0.641	0.610	0.643	0.678	0.694	0.698	0.698	0.693	0.676	0.646
	3.50	0.125	0.127	0.129	0.129	0.129	0.128	0.127	0.125	0.674	0.713	0.733	0.738	0.738	0.731	0.712	0.677	0.713	0.751	0.771	0.776	0.776	0.769	0.750	0.716
	3.60	0.116	0.119	0.120	0.120	0.120	0.120	0.119	0.117	0.626	0.662	0.682	0.687	0.686	0.681	0.662	0.629	0.662	0.698	0.717	0.722	0.721	0.716	0.697	0.666
	3.70	0.091	0.092	0.093	0.094	0.093	0.093	0.092	0.091	0.484	0.511	0.526	0.531	0.529	0.525	0.511	0.485	0.512	0.539	0.553	0.558	0.556	0.552	0.539	0.513
	3.80	0.054	0.055	0.056	0.056	0.056	0.056	0.055	0.054	0.284	0.300	0.309	0.311	0.311	0.309	0.300	0.284	0.301	0.316	0.325	0.327	0.327	0.325	0.316	0.301
	3.90	0.019	0.019	0.019	0.019	0.019	0.019	0.019	0.019	0.095	0.101	0.104	0.105	0.105	0.104	0.101	0.095	0.101	0.107	0.110	0.111	0.111	0.110	0.107	0.101
	4.00	0.000	0.000	0.000	0.000	0.000	0.000	0.000	0.000	0.000	0.000	0.000	0.000	0.000	0.000	0.000	0.000	0.000	0.000	0.000	0.000	0.000	0.000	0.000	0.000
SPAN NO. 4	4.10	0.005	0.006	0.006	0.006	0.006	0.006	0.006	0.005	0.038	0.041	0.042	0.042	0.042	0.042	0.041	0.038	0.040	0.043	0.044	0.044	0.044	0.044	0.043	0.040
	4.20	0.023	0.024	0.024	0.024	0.024	0.024	0.024	0.023	0.142	0.151	0.155	0.155	0.155	0.155	0.151	0.143	0.150	0.159	0.162	0.162	0.162	0.162	0.159	0.151
	4.30	0.046	0.048	0.049	0.049	0.049	0.048	0.047	0.046	0.279	0.296	0.304	0.306	0.306	0.302	0.294	0.281	0.294	0.311	0.319	0.321	0.321	0.317	0.309	0.296
	4.40	0.068	0.070	0.072	0.072	0.072	0.072	0.070	0.068	0.410	0.434	0.446	0.449	0.448	0.445	0.433	0.412	0.432	0.456	0.468	0.471	0.470	0.467	0.455	0.434
	4.50	0.083	0.087	0.088	0.089	0.088	0.088	0.086	0.084	0.500	0.530	0.545	0.549	0.548	0.543	0.528	0.504	0.527	0.557	0.571	0.575	0.574	0.569	0.555	0.531
	4.60	0.088	0.091	0.093	0.094	0.093	0.093	0.091	0.089	0.528	0.558	0.574	0.580	0.578	0.573	0.558	0.532	0.557	0.586	0.602	0.608	0.606	0.601	0.586	0.561
	4.70	0.081	0.084	0.086	0.086	0.086	0.085	0.084	0.082	0.486	0.514	0.529	0.533	0.533	0.527	0.514	0.490	0.512	0.540	0.554	0.558	0.558	0.552	0.540	0.516
	4.80	0.063	0.065	0.066	0.066	0.066	0.066	0.065	0.063	0.375	0.396	0.408	0.410	0.409	0.406	0.396	0.377	0.395	0.416	0.428	0.430	0.429	0.426	0.416	0.397
	4.90	0.034	0.035	0.036	0.036	0.036	0.036	0.035	0.035	0.204	0.216	0.222	0.224	0.223	0.222	0.216	0.207	0.215	0.227	0.233	0.235	0.234	0.233	0.227	0.218
	5.00	0.000	0.000	0.000	0.000	0.000	0.000	0.000	0.000	0.000	0.000	0.000	0.000	0.000	0.000	0.000	0.000	0.000	0.000	0.000	0.000	0.000	0.000	0.000	0.000

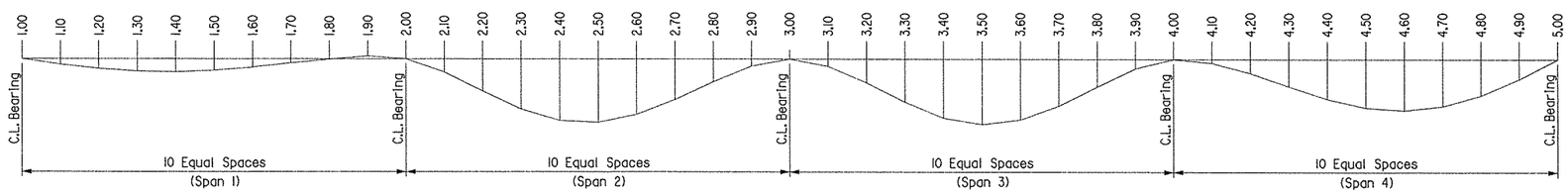

DEAD LOAD DEFLECTION DIAGRAM
Not to Scale

STATE OF ARKANSAS
LARRY W. MILLER
REGISTERED PROFESSIONAL ENGINEER
No. 11339
8-19-13
BRIDGE ENGINEER

BRIDGE A
SHEET 5 OF 5
DETAILS OF 280'-0" CONTINUOUS COMPOSITE W-BEAM UNIT
REDMOND ROAD

ROUTE 67 SEC. 10

ARKANSAS STATE HIGHWAY COMMISSION
LITTLE ROCK, ARK.

DRAWN BY: BEG DATE: 1-13
CHECKED BY: GS DATE: 03-01-13
DESIGNED BY: BEG DATE: 1-13
FILENAME: b061276al_s5.dgn
SCALE: As Shown

BRIDGE NO. A7282 DRAWING NO. 53604

DATE REVISED	DATE FILMED	DATE REVISED	DATE FILMED	FED. ROAD DIST. NO.	STATE	FED. AID PROJ. NO.	SHEET NO.	TOTAL SHEETS
				6	ARK.			
				JOB NO.		061276	200	438
				(1) A7282		FENCE DETAILS		53604a

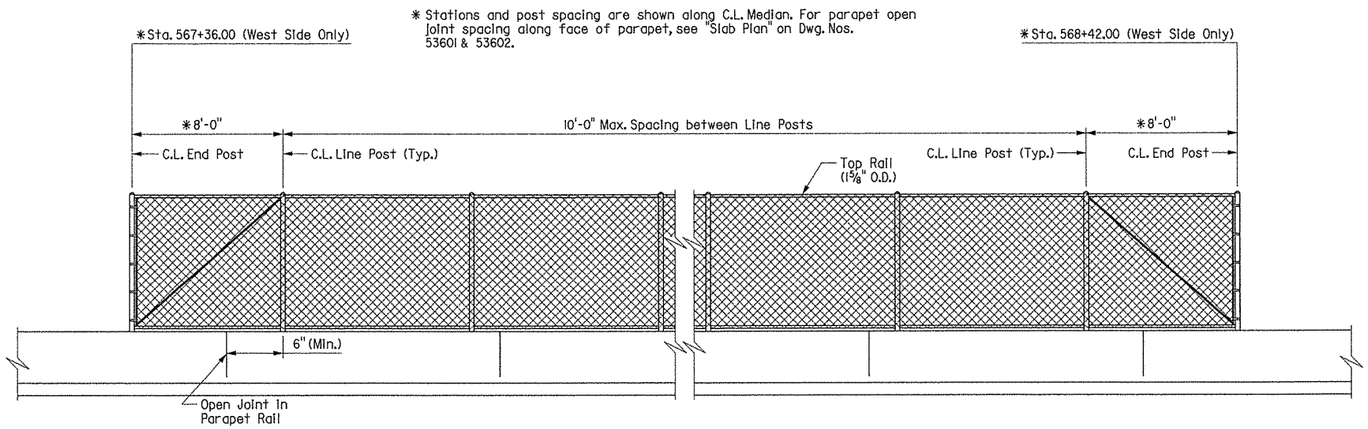

LONGITUDINAL VIEW OF CHAIN LINK FENCE

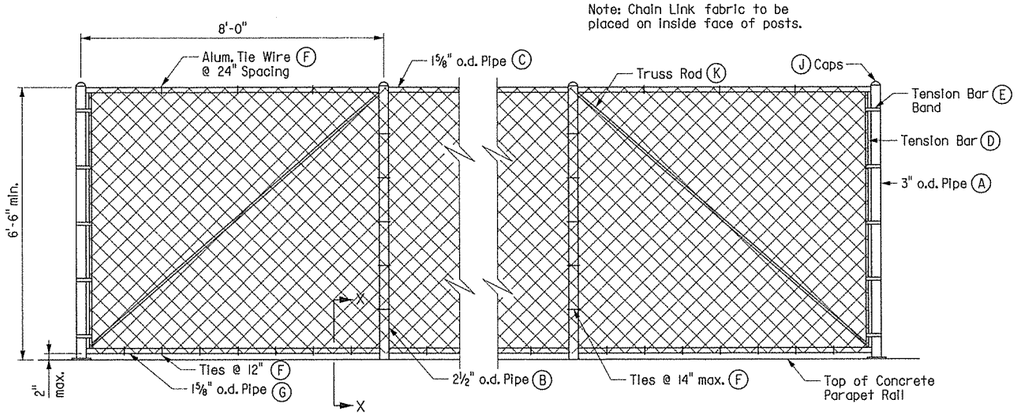

DETAIL OF CHAIN LINK FENCE

Note: Chain link fabric to be placed on inside face of posts.

(A) END POST: 3" O.D.
(B) LINE POST: 2½" O.D.
(C) TOP RAIL: 1⅝" O.D.
(D) TENSION BAR: 3/16"x ¾" Bar
(E) TENSION BAR BAND: ¾"x .074 w/5/16"ø x 1¼" Bolt (1 Band Top & Bottom w/15" max. spaces)
(F) TIE WIRE: 9 Ga. Aluminum
(G) BOTTOM RAIL: 1⅝" O.D.
(H) FABRIC: 9 Ga. 2" Mesh w/Knuckle or Twisting Selvage
(J) CAPS: All Posts shall be Capped & Shall Conform to ASTM F626-84
(K) TRUSS ROD: Min. of 5/16" Round with Tighteners and Fittings

Note: Chain link fence attached to bridge shall be paid for as "7' Steel Chain Link Fence". For additional details of chain link fence, see Standard Drawing WF-3.

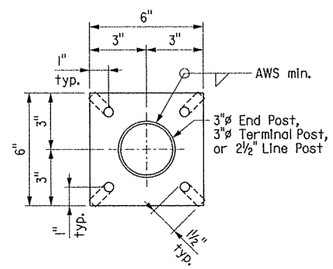

SECTION Y-Y

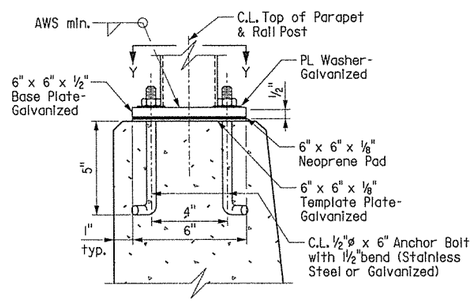

SECTION X-X

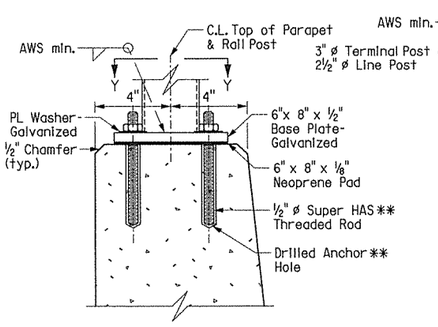

SECTION X-X

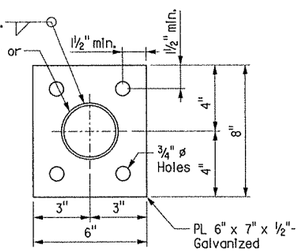

SECTION Y-Y

** HILTI HIT RE 500 Epoxy Adhesive Anchor System with 4½" embedment.

The HILTI Epoxy Adhesive Anchor System shall be installed in accordance with Manufacturer's recommendations.

DETAILS OF ALTERNATE POST ANCHOR SYSTEM (EPOXY ADHESIVE ANCHORS)

Notes:

Fence layout shall conform to the vertical and horizontal bridge alignments. Fence posts shall be set plumb (true vertical position). Parapet rail concrete shall be at least 7 days old before stretching and securing fabric to posts.

Cast in place anchor bolts shall be of stainless steel or high strength steel. Stainless steel anchor bolts shall conform to ASTM A193 or A320-Grade B8 with a minimum yield strength of 80,000 psi. High strength steel anchor bolts shall conform to AASHTO M164 or ASTM A354-Grade BC galvanized in accordance with AASHTO M232.

Nuts shall conform to ASTM A194-Grade 8 (Stainless Steel) or AASHTO M164 galvanized in accordance with AASHTO M232.

Threads on bolts, screws and nuts shall conform to American Standard Coarse Series, Class 2 Fit, ASA Specification B1.1.

Washers shall be of high strength steel conforming to AASHTO M270, Grade 36 galvanized in accordance with AASHTO M232 or of stainless steel conforming to ASTM A276 or A167-Type 302.

Base plates shall not be placed upon areas that are improperly finished, deformed, or irregular.

Neoprene pad and template plates shall not be paid for directly, but shall be considered incidental to the unit price bid for item "7' STEEL CHAIN LINK FENCE".

STATE OF ARKANSAS REGISTERED PROFESSIONAL ENGINEER No. 11339 8-19-13 LARRY W. MILLER
BRIDGE ENGINEER

BRIDGE A
DETAILS OF CHAIN LINK FENCE
REDMOND ROAD

ROUTE 67 SEC. 10

ARKANSAS STATE HIGHWAY COMMISSION

LITTLE ROCK, ARK.

DRAWN BY: LM DATE: 02-13
CHECKED BY: GS DATE: 03-01-13
DESIGNED BY: LM DATE: 02-13

FILENAME: b061276al_fl.dgn
SCALE: As Shown

BRIDGE NO. A7282 DRAWING NO. 53604a

DATE REVISED	DATE FILMED	DATE REVISED	DATE FILMED	FED. ROAD DIST. NO.	STATE	FED. AID PROJ. NO.	SHEET NO.	TOTAL SHEETS
				6	ARK.			
				JOB NO.		061276	201	438
				(1)	A&B7282	SPAN DETAILS		53605

TABLE OF BEAM VARIABLES

(Dimensions shown are taken along C.L. Beam)

BRIDGE NO.	BEAM NO.	"A"	"B"	"C"	"D"	"E"	"F"	"G"	"H"	"J"	"K"	"L"	"M"	"N"
A7282	1	280'-1 1/16"	51'-0 1/4"	79'-0 7/16"	84'-0 1/2"	66'-0 1/2"	32'-0 1/4"	35'-0 7/16"	42'-0 1/2"	47'-0 1/2"	1'-0 5/16"	1'-0 9/16"	7'-6 3/16"	7'-6 1/4"
	2	280'-1 3/16"	51'-0 3/16"	79'-0 5/16"	84'-0 3/8"	66'-0 3/8"	32'-0 3/16"	35'-0 5/16"	42'-0 3/8"	47'-0 3/8"	1'-0 5/16"	1'-0 7/16"	7'-6 1/8"	7'-6 3/16"
	3	280'-0 15/16"	51'-0 1/8"	79'-0 3/16"	84'-0 1/4"	66'-0 3/16"	32'-0 1/8"	35'-0 3/16"	42'-0 1/4"	47'-0 3/16"	1'-0 5/16"	1'-0 7/16"	7'-6 1/16"	7'-6 1/8"
	4	280'-0 1/4"	51'-0 1/16"	79'-0 1/16"	84'-0 1/16"	66'-0 1/16"	32'-0 1/16"	35'-0 1/16"	42'-0 1/16"	47'-0 1/16"	1'-0 5/16"	1'-0 9/16"	7'-6"	7'-6 1/16"
	5	279'-11 3/4"	51'-0"	78'-11 7/16"	83'-11 5/16"	65'-11 7/16"	32'-0"	34'-11 5/16"	41'-11 5/16"	46'-11 5/16"	1'-0 5/16"	1'-0 9/16"	7'-5 15/16"	7'-5 15/16"
	6	279'-11 5/16"	50'-11 15/16"	78'-11 5/16"	83'-11 3/16"	65'-11 5/16"	31'-11 15/16"	34'-11 15/16"	41'-11 1/4"	46'-11 1/16"	1'-0 5/16"	1'-0 9/16"	7'-5 7/8"	7'-5 7/8"
	7	279'-10 7/16"	50'-11 3/16"	78'-11 1/16"	83'-11 1/8"	65'-11 1/16"	31'-11 7/16"	34'-11 7/16"	41'-11 5/8"	46'-11 7/16"	1'-0 5/16"	1'-0 9/16"	7'-5 7/8"	7'-5 7/8"
	8	279'-10 3/8"	50'-11 1/4"	78'-11 7/16"	83'-11 1/2"	65'-11 1/2"	31'-11 3/4"	34'-11 9/16"	41'-11 1/2"	46'-11 1/2"	1'-0 5/16"	1'-0 7/16"	7'-5 5/16"	7'-5 3/4"

TABLE OF BEAM VARIABLES

(Dimensions shown are taken along C.L. Beam)

BRIDGE NO.	BEAM NO.	"A"	"B"	"C"	"D"	"E"	"F"	"G"	"H"	"J"	"K"	"L"	"M"	"N"
B7282	1	280'-1 3/16"	51'-0 1/4"	79'-0 7/16"	84'-0 3/16"	66'-0 1/2"	32'-0 1/4"	35'-0 7/16"	42'-0 3/16"	47'-0 1/2"	1'-0 5/16"	1'-0 1/2"	7'-6 1/4"	7'-6 5/16"
	2	280'-1 3/8"	51'-0 3/16"	79'-0 5/16"	84'-0 7/16"	66'-0 3/8"	32'-0 3/16"	35'-0 5/16"	42'-0 7/16"	47'-0 3/8"	1'-0 5/16"	1'-0 1/2"	7'-6 3/16"	7'-6 3/16"
	3	280'-0 7/8"	51'-0 1/8"	79'-0 1/4"	84'-0 5/16"	66'-0 1/4"	32'-0 1/8"	35'-0 1/4"	42'-0 5/16"	47'-0 1/4"	1'-0 5/16"	1'-0 1/2"	7'-6 1/8"	7'-6 1/8"
	4	280'-0 7/16"	51'-0 1/16"	79'-0 1/8"	84'-0 1/8"	66'-0 1/8"	32'-0 1/16"	35'-0 1/8"	42'-0 1/8"	47'-0 1/8"	1'-0 5/16"	1'-0 1/2"	7'-6 1/16"	7'-6 1/16"
	5	280'-0"	51'-0"	79'-0"	84'-0"	66'-0"	32'-0"	35'-0	42'-0"	47'-0"	1'-0 5/16"	1'-0 1/2"	7'-6"	7'-6"
	6	279'-11 5/16"	50'-11 15/16"	78'-11 7/8"	83'-11 7/8"	65'-11 7/8"	31'-11 15/16"	34'-11 7/8"	41'-11 7/8"	46'-11 7/8"	1'-0 5/16"	1'-0 1/2"	7'-5 15/16"	7'-5 15/16"
	7	279'-11 1/8"	50'-11 7/8"	78'-11 3/4"	83'-11 11/16"	65'-11 3/4"	31'-11 7/8"	34'-11 3/4"	41'-11 9/16"	46'-11 3/4"	1'-0 5/16"	1'-0 1/2"	7'-5 7/8"	7'-5 7/8"
	8	279'-10 15/16"	50'-11 15/16"	78'-11 11/16"	83'-11 7/16"	65'-11 5/8"	31'-11 7/16"	34'-11 9/16"	41'-11 5/16"	46'-11 5/8"	1'-0 5/16"	1'-0 1/2"	7'-5 13/16"	7'-5 13/16"
	9	279'-10 1/4"	50'-11 3/4"	78'-11 3/8"	83'-11 7/16"	65'-11 1/2"	31'-11 3/4"	34'-11 9/16"	41'-11 7/16"	46'-11 1/2"	1'-0 5/16"	1'-0 1/2"	7'-5 3/4"	7'-5 11/16"

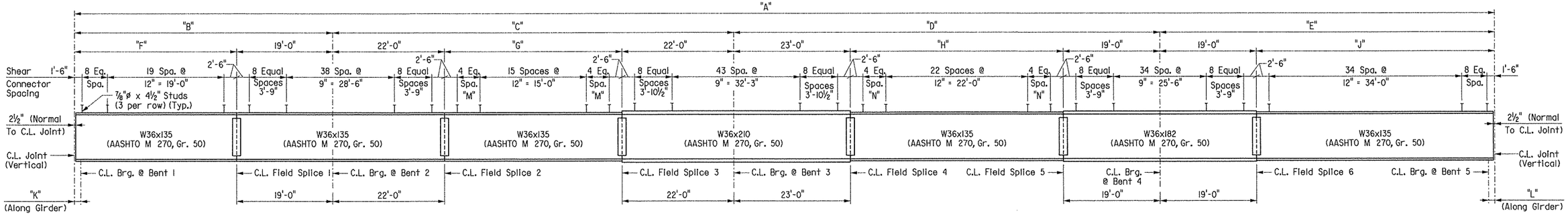

BEAM ELEVATION

No Scale

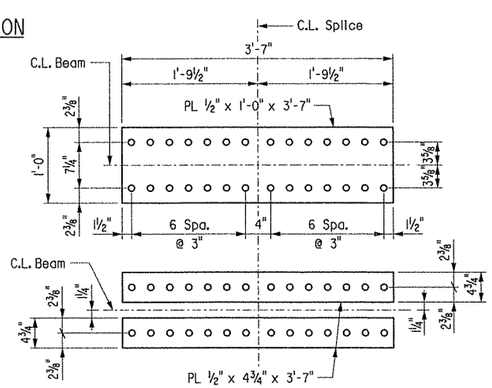

TOP AND BOTTOM FLANGE SPLICE 3 & 4

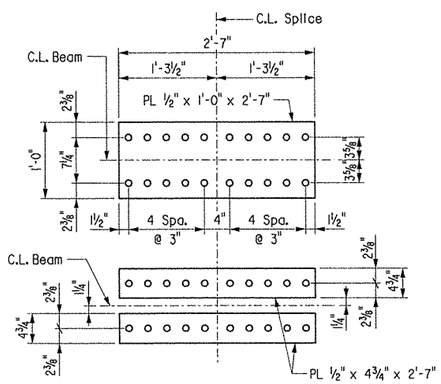

TOP AND BOTTOM FLANGE SPLICE 1 & 2

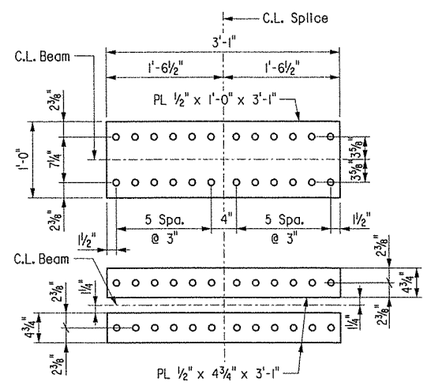

TOP AND BOTTOM FLANGE SPLICE 5 & 6

NOTES:

All longitudinal dimensions are taken along C.L. Beam, U.N.O.

Beams are curved and concentric to C.L. Bridge.

For FRAMING PLAN, see Dwg. Nos. 53603 & 53624.

For BENT PLATE DIAPHRAGM DETAILS, see Dwg. No. 53606.

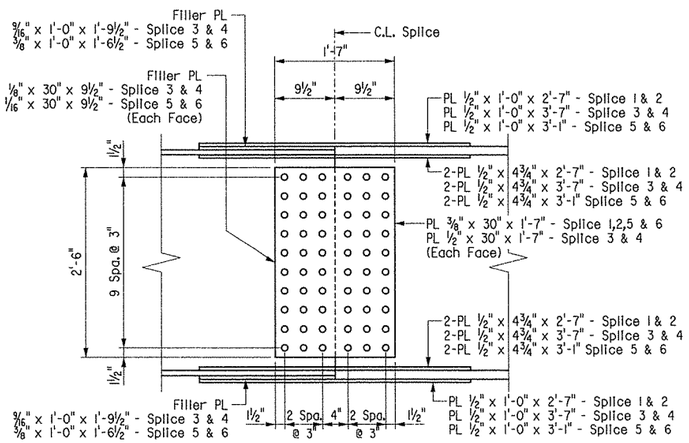

WEB SPLICE

FIELD SPLICE DETAILS

Scale: 1" = 1'-0"

NOTE: All field splice bolts shall be 7/8" ø H.S. bolts. All field splice plates shall be AASHTO M 270, Gr. 50 steel.

Bolted field splices shown may be eliminated or shop welded splices may be substituted with approval of the Engineer.

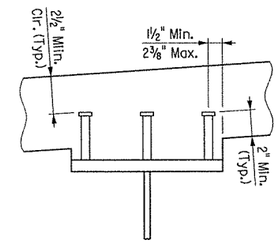

Stud Shear Connectors shown shall be 7/8"ø x 4 1/2" long, granular flux filled, solid fluxed or equal, and automatically end welded to the beam flange in accordance with the recommendations of the Manufacturer. 3/4"ø studs may be used in place of the 7/8"ø studs shown, at the ratio of 1.361 - 3/4"ø studs in place of one 7/8"ø stud. 7/8"ø studs will be used as basis for measurment of structural steel in shear connectors. Maximum stud spacing = 24".

SHEAR CONNECTOR DETAIL

No Scale

STATE OF ARKANSAS
REGISTERED PROFESSIONAL ENGINEER
No. 11339
8-19-13
LARRY W. MILLER

BRIDGE ENGINEER

SHEET 1 OF 6
COMMON DETAILS OF CONTINUOUS COMPOSITE W-BEAM UNIT REDMOND ROAD

ROUTE 67 SEC. 10

ARKANSAS STATE HIGHWAY COMMISSION

LITTLE ROCK, ARK.

DRAWN BY: BEG DATE: 1-13
CHECKED BY: GS DATE: 03-01-13
DESIGNED BY: BEG DATE: 1-13

FILENAME: b061276ml_s6.dgn
SCALE: As Shown

BRIDGE NO. A&B7282 DRAWING NO. 53605

DATE REVISED	DATE FILMED	DATE REVISED	DATE FILMED	FED. ROAD DIST. NO.	STATE	FED. AID PROJ. NO.	SHEET NO.	TOTAL SHEETS
				6	ARK.			
				JOB NO.		061276	202	438
				(1) A&B7282		SPAN DETAILS		53606

SUPERSTRUCTURE GENERAL NOTES

CONSTRUCTION SPECIFICATIONS: Arkansas State Highway and Transportation Department Standard Specifications for Highway Construction (2014 Edition) with applicable supplemental specifications and special provisions.

DESIGN SPECIFICATIONS: AASHTO LRFD Bridge Design Specifications (2010, 5th Edition), with interim specifications

MATERIALS AND STRENGTHS:

Class S(AE) Concrete	f'c =	4,000 psi
Reinforcing Steel (AASHTO M 31 or M322 Type A, Gr. 60)	fy =	60,000 psi
Structural Steel (AASHTO M 270, Gr. 50)	fy =	50,000 psi
Structural Steel (AASHTO M 270, Gr. 36)	fy =	36,000 psi

CONCRETE: Concrete shall be poured in the dry and all exposed corners to be chamfered ¾" unless otherwise noted. All concrete shall be Class S(AE) with a minimum 28 day compressive strength f'c = 4,000 psi.

The superstructure details shown are for use when removable deck forming is used and are the basis for measurement of Class S(AE) Concrete. See Standard Drawing No. 55005 for allowable modifications and for tolerances when Permanent Steel Bridge Deck Forms are used.

Concrete in bridge superstructure shall be placed, consolidated and screeded off for the entire pour before any concrete has taken its initial set. This may require the use of a retarding agent.

The concrete deck shall be given a tine finish in accordance with subsection 802.19 for Class 5 Tined Bridge Roadway Surface Finish. Movement of the finishing machine across new concrete shall be on planks placed on the surface and shall be prohibited for 72 hours after finishing the pour. Sufficient concrete must be placed ahead of the strike-off to fully load the beam. Use of a longitudinal screed is prohibited.

A minimum of 72 hours shall elapse between completion of the deck and the pouring of the parapet railing. Any railing pours made before the entire deck has been placed and cured must be approved by the Engineer.

REINFORCING STEEL: All reinforcing steel shall conform to AASHTO M 31 or M322 Type A, Grade 60. The reinforcing steel is to be accurately located in the forms and firmly held in place by steel wire supports, sufficient in number and size to prevent displacement during the course of construction. The wire supports will not be paid for directly, but will be considered subsidiary to the item "EPOXY COATED REINFORCING STEEL (GRADE 60)".

STRUCTURAL STEEL: All structural steel shall be AASHTO M 270, Gr. 50 unless otherwise noted and shall be paid for as "STRUCTURAL STEEL IN BEAM SPANS (M 270, GR. 50)". All structural steel except galvanized steel and steel which is completely encased in concrete shall be painted in accordance with subsection 807.75. The color of paint shall be Aluminum and shall conform to Federal Standard 595B, Color Chip No. 37200. All exposed surfaces shall be cleaned in accordance with subsection 807.84(b). Structural steel completely embedded in concrete may be AASHTO M 270, Grade 36. See Dwg. No. 53627 for cleaning requirements of external load plates of elastomeric bearings.

Drawings show general features of design only. Shop drawings shall be made in accordance with the specifications, submitted, and approval secured before fabrication is begun.

Requests for substitution of structural steel shapes shown with shapes of greater size must be submitted by the Contractor to the Engineer for approval. Steels of equal or greater strengths will be accepted only when shown on the approved shop drawings. Shapes and materials shown in the plans will be the basis of payment and no additional compensation will be made for any adjustments due to substitutions.

Beams, splice plates, bent plate diaphragms, and connection plates are considered main load carrying members and shall meet the Longitudinal Charpy V-notch Test specified in subsection 807.05. This work and material will not be paid for directly but are considered subsidiary to item "STRUCTURAL STEEL IN BEAM SPANS (M 270, GR. 50)".

All Beams shall be blocked in their true position in the shop, in groups of a minimum of three (3) sections as specified in subsection 807.54(b)(2). The camber, length of sections, distance between bearings and openings of joints shall be measured with the beams in their true position and this information shall become part of the permanent records for this job. The component parts shall be match marked in this assembly and these marks shall be shown on the erection diagram. All beam dimensions are based on a temperature of 60° F. A tolerance of ¼" +/- is allowed for camber.

Field splice flange plates shall be cut and fabricated so that the primary direction of rolling is parallel to the direction of the main tensile and/or compressive stresses.

All welding that is to be done during fabrication of structural steel, including temporary welds, shall be detailed on the shop drawings and submitted for approval. If additional welds are required, whether temporary or permanent, a formal request with detailed drawings shall be submitted to the Engineer for approval; however, additional welds used for attaching falsework support devices or screed rail supports to the structural steel that do not exceed the limitations of subsection 802.13 will not require approval prior to construction. All welding shall conform to subsection 807.26.

Anchor bolts shall be galvanized according to section 807.07 and shall be Grade 55.

Field connection shall be bolted with high-strength bolts and shall be ¾"ø bolts unless otherwise noted. Bolts shall be placed with heads on the outside face of the exterior beam webs and on the bottom of the beam flanges. Hole for ¾"ø high-strength bolts may be 15/16"ø if a washer is supplied for use under both the nut and head of the bolt.

Diaphragms shall be installed as beams are erected. All bolts in diaphragms and field splices shall be installed and tightened in accordance with subsection 807.71 prior to pouring the concrete deck, unless noted otherwise.

Bearings shall be seated in accordance with subsection 808.08. This work and materials are to be considered as subsidiary to the item "ELASTOMERIC BEARINGS" and will not be paid for directly.

(1) If permanent steel bridge deck forms are used, the fabricator shall clip the plate as necessary to accomodate the deck form support.

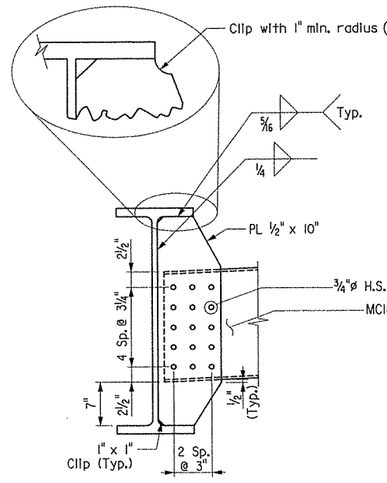

DIAPHRAGM CONNECTION A

Scale: 1" = 1'-0"
(Typ. @ Exterior Beams)
(Unless Noted Otherwise)

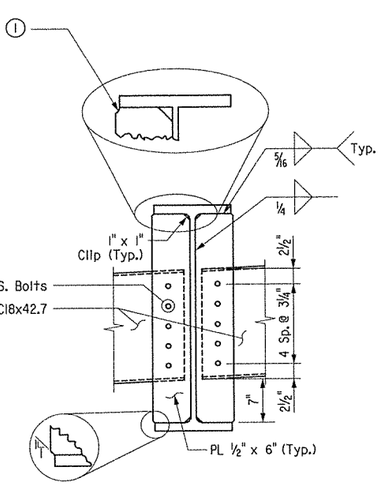

DIAPHRAGM CONNECTION B

Scale: 1" = 1'-0"
(Typ. @ Interior Beams)
(Unless Noted Otherwise)

Note: Stop weld ¼" to 1" from end of clip (Typ.)

TABLE FOR WELD

Material Thickness of Thicker Part Joined (Inches)	Minimum Size of Fillet Weld (Inches)	Single Pass Weld Must Be Used
To ¾" Inclusive	¼"	
Over ¾"	5/16"	

NOTE: When a fillet weld size, as shown on the plans, is larger than the minimum, the first pass shall be that specified for minimum size of fillet weld.

STATE OF ARKANSAS
REGISTERED PROFESSIONAL ENGINEER
No. 11339
LARRY W. MILLER
3-24-14
BRIDGE ENGINEER

SHEET 2 OF 6
COMMON DETAILS OF CONTINUOUS COMPOSITE W-BEAM UNIT
REDMOND ROAD

ROUTE 67 SEC. 10

ARKANSAS STATE HIGHWAY COMMISSION
LITTLE ROCK, ARK.

DRAWN BY: BEG DATE: 02-13
CHECKED BY: GS DATE: 03-01-13
DESIGNED BY: BEG DATE: 02-13
FILENAME: b061276ml_s7.dgn
SCALE: As Shown

BRIDGE NO. A&B7282 DRAWING NO. 53606

(P) C.L. Partial Depth Parapet Joint (¼" to 1" max.).
Stop 1'-6" from top of slab.

(F) C.L. Full Depth Parapet Joint (¼" to 1" max.).
Stop 4" from top of slab.

DATE REVISED	DATE FILMED	DATE REVISED	DATE FILMED	FED. ROAD DIST. NO.	STATE	FED. AID PROJ. NO.	SHEET NO.	TOTAL SHEETS
				6	ARK.			
				JOB NO.		061276	203	438
				(1) A&B7282		SPAN DETAILS		53607

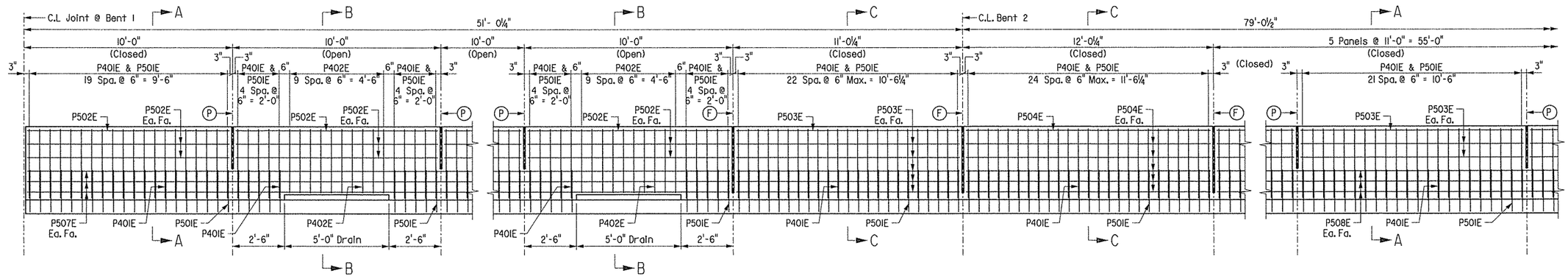

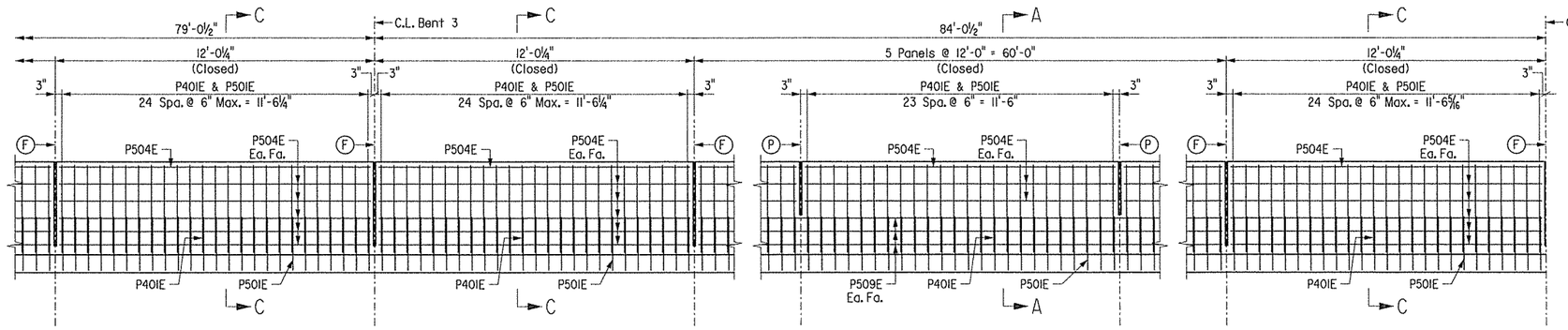

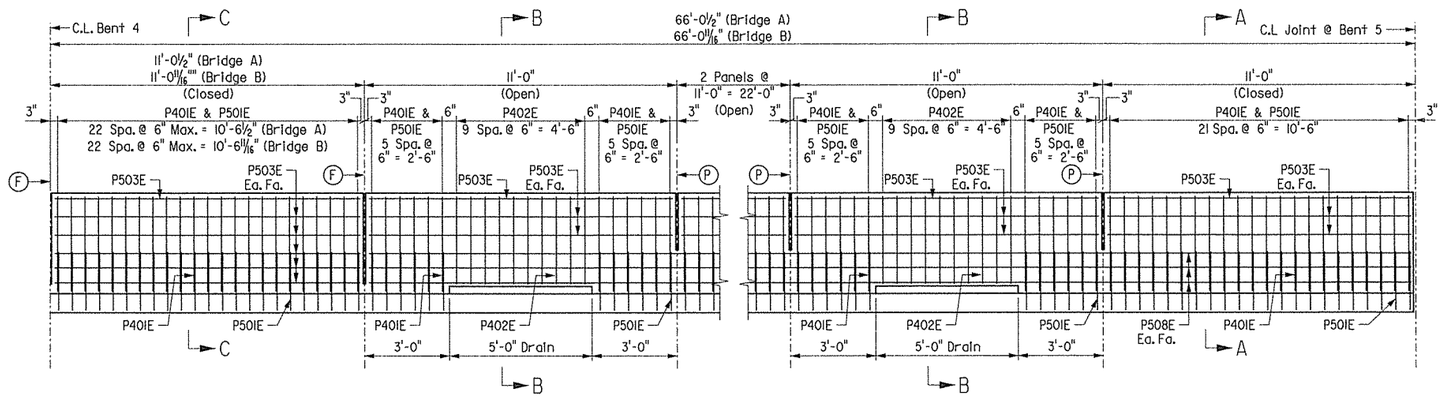

DETAILS OF PARAPET RAIL - LOW SIDE OF BRIDGE

Scale: ⅜" = 1'-0"

Note: All dimensions shown are taken along gutterline of bridge.

Note: For Sections A-A, B-B & C-C, see Dwg. No. 53609.

Note: For Bar List, see Dwg. No. 53610.

Note: For DETAILS OF OPTIONAL SLIPFORMING OF CONCRETE PARAPET RAIL, see Dwg. No. 53609.

STATE OF ARKANSAS
REGISTERED PROFESSIONAL ENGINEER
No. 11339
LARRY W. MILLER
8-19-13
BRIDGE ENGINEER

SHEET 3 OF 6
COMMON DETAILS OF CONTINUOUS COMPOSITE W-BEAM UNIT
REDMOND ROAD

ROUTE 67 SEC. 10

ARKANSAS STATE HIGHWAY COMMISSION
LITTLE ROCK, ARK.

DRAWN BY: BEG DATE: 02-13
CHECKED BY: GS DATE: 03-01-13
DESIGNED BY: BEG DATE: 02-13
FILENAME: b061276ml_s8.dgn
SCALE: As Shown

BRIDGE NO. A&B7282 DRAWING NO. 53607

(P) C.L. Partial Depth Parapet Joint (¼" to 1" max.).
Stop 1'-6" from top of slab.

(F) C.L. Full Depth Parapet Joint (¼" to 1" max.).
Stop 4" from top of slab.

DATE REVISED	DATE FILMED	DATE REVISED	DATE FILMED	FED. ROAD DIST. NO.	STATE	FED. AID PROJ. NO.	SHEET NO.	TOTAL SHEETS
				6	ARK.			
				JOB NO.		061276	204	438
				(1) A&B7282		SPAN DETAILS		53608

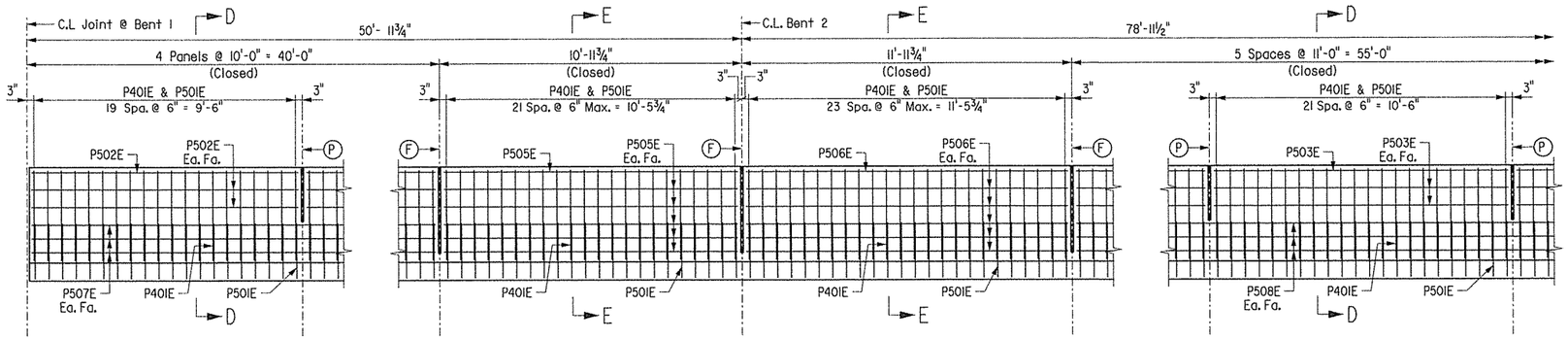

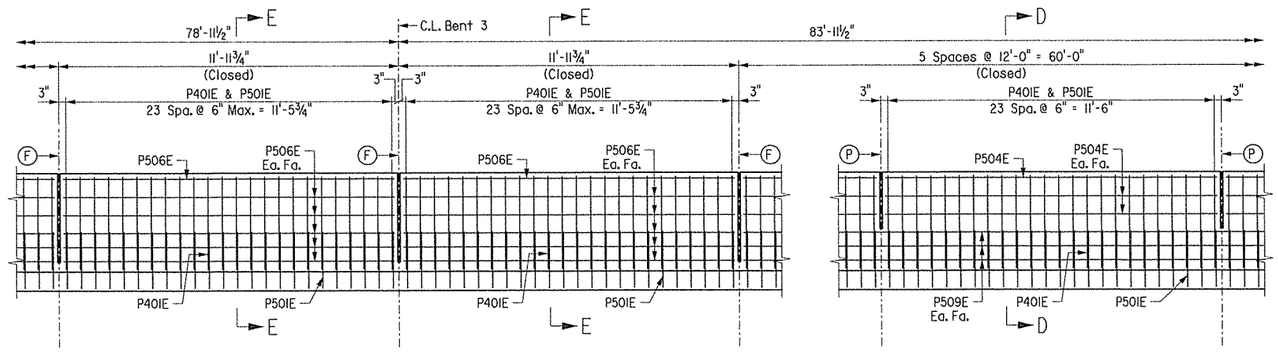

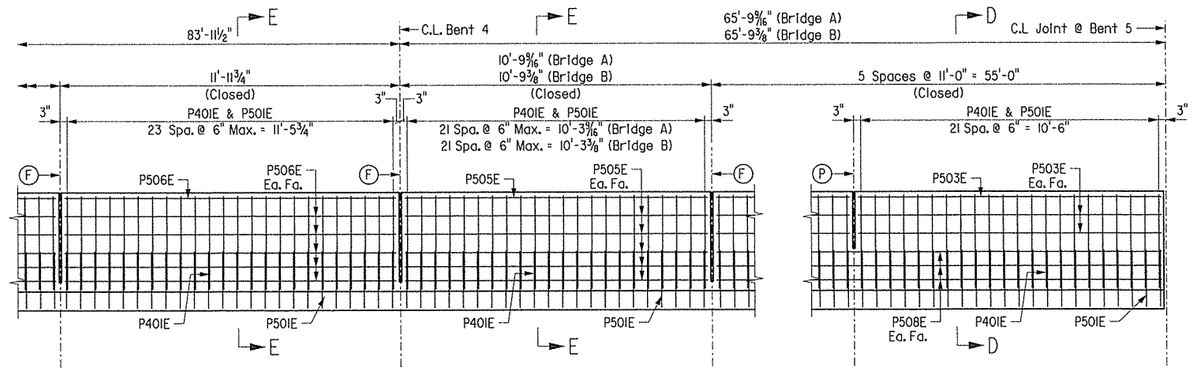

DETAILS OF PARAPET RAIL - HIGH SIDE OF BRIDGE

Scale: ⅜" = 1'-0"

Note: All dimensions shown are taken along gutterline of bridge.

Note: For Sections D-D & E-E, see Dwg. No. 53609.

Note: For Bar List, see Dwg. No. 53610.

Note: For DETAILS OF OPTIONAL SLIPFORMING OF CONCRETE PARAPET RAIL, see Dwg. No. 53609.

STATE OF ARKANSAS
Larry W. Miller
REGISTERED PROFESSIONAL ENGINEER
No. 11339
8-19-13
LARRY W. MILLER
BRIDGE ENGINEER

SHEET 4 OF 6
COMMON DETAILS OF CONTINUOUS COMPOSITE W-BEAM UNIT
REDMOND ROAD

ROUTE 67 SEC. 10

ARKANSAS STATE HIGHWAY COMMISSION
LITTLE ROCK, ARK.

DRAWN BY: BEG DATE: 02-13
CHECKED BY: GS DATE: 03-01-13
DESIGNED BY: BEG DATE: 02-13
FILENAME: b061276ml_s9.dgn
SCALE: As Shown

BRIDGE NO. A&B7282 DRAWING NO. 53608

DATE REVISED	DATE FILMED	DATE REVISED	DATE FILMED	FED. ROAD DIST. NO.	STATE	FED. AID PROJ. NO.	SHEET NO.	TOTAL SHEETS
				6	ARK.			
				JOB NO.		061276	205	438
				(1) A&B7282		SPAN DETAILS		53609

Note: For Bar List, see Dwg. No. 53610.

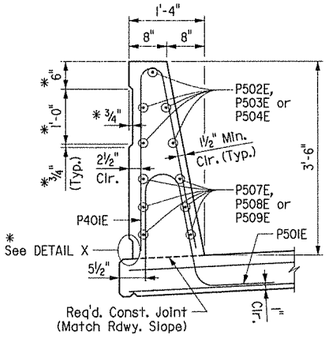

SECTION A-A

Scale: ¾" = 1'-0"

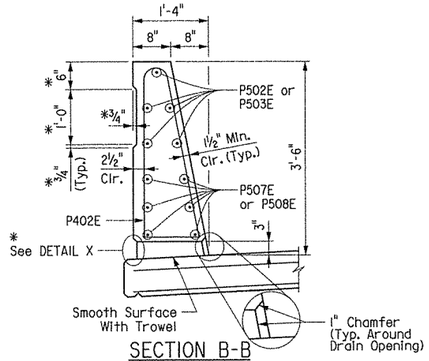

SECTION B-B

Scale: ¾" = 1'-0"

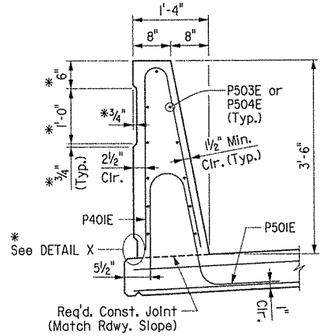

SECTION C-C

Scale: ¾" = 1'-0"

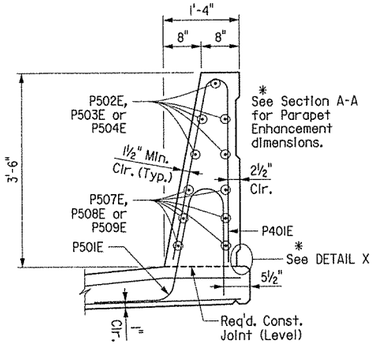

SECTION D-D

Scale: ¾" = 1'-0"

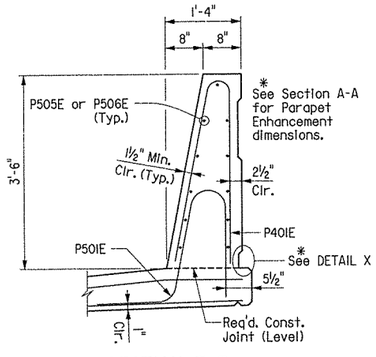

SECTION E-E

Scale: ¾" = 1'-0"

* Parapet enhancement and Detail X are not required on the median parapets.

** Panel inset may be made continuous if slip forms are used.

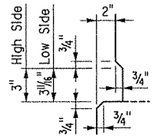

DETAIL X

No Scale

Note: Does not apply to median parapet rail.

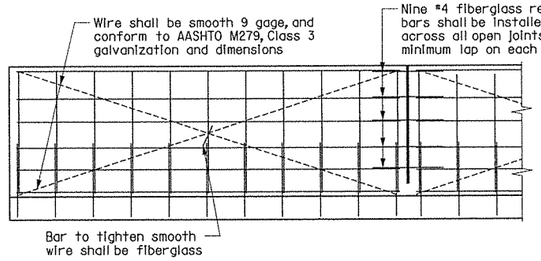

All panels shall be braced as shown to prevent racking. All open joints shall be sawed as soon as practical to a minimum width of ¼". To control cracking before sawing all joints must be grooved before the concrete is set. Sawing of the joints must be controlled so it will follow the grooved joint.

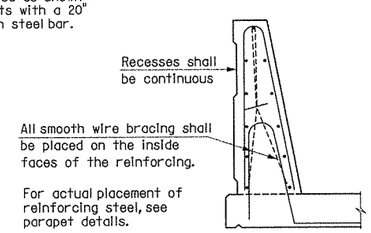

The extruded parapet shall conform to the horizontal and vertical lines shown on the plans or as directed by the Engineer and shall present a smooth, uniform appearance and texture. Exposed surfaces may be given a light brush finish or a Class 3 Textured Coating Finish in place of Class 2 Rubbed Finish.

DETAILS OF OPTIONAL SLIPFORMING OF CONCRETE PARAPET RAIL

No Scale

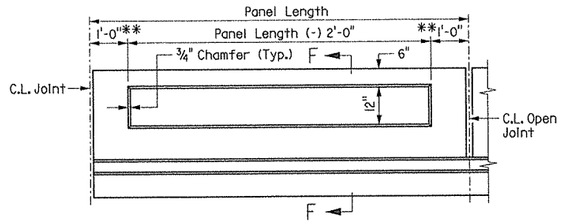

PARAPET ENHANCEMENT DETAILS

Scale: ½" = 1'-0"

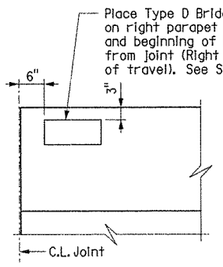

NAME PLATE DETAIL

No Scale

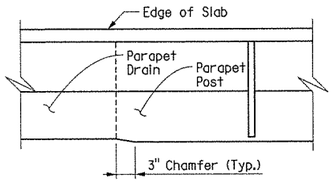

PLAN OF RAIL POST CHAMFER

(Typ. for Open Parapet Panels Only)
1" = 1'-0"

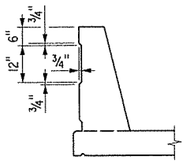

SECTION F-F

Scale: ½" = 1'-0"

STATE OF ARKANSAS
REGISTERED PROFESSIONAL ENGINEER
No. 11339
3-24-14
LARRY W. MILLER
BRIDGE ENGINEER

SHEET 5 OF 6
COMMON DETAILS OF CONTINUOUS COMPOSITE W-BEAM UNIT
REDMOND ROAD

ROUTE 67 SEC. 10

ARKANSAS STATE HIGHWAY COMMISSION

LITTLE ROCK, ARK.

DRAWN BY: BEG DATE: 02-13
CHECKED BY: GS DATE: 03-01-13
DESIGNED BY: BEG DATE: 02-13

FILENAME: b061276ml_sl0.dgn
SCALE: As Shown

BRIDGE NO. A&B7282 DRAWING NO. 53609

DATE REVISED	DATE FILMED	DATE REVISED	DATE FILMED

FED. ROAD DIST. NO.	STATE	FED. AID PROJ. NO.	SHEET NO.	TOTAL SHEETS
6	ARK.			
JOB NO.		061276	206	438
(1) A&B7282		SPAN DETAILS		53610

SUPERSTRUCTURE BAR LIST - BRIDGE A

Mark	No. Req'd.	Length	Pin Dia.	Mark	No. Req'd.	Length	Pin Dia.
S401E	480	36'-9"	Str.	P501E	1056	5'-7"	3 3/4"
				P502E	40	9'-8"	Str.
S501E	390	58'-1"	Str.	P503E	122	10'-8"	Str.
S502E	264	60'-0"	3"	P504E	94	11'-8"	Str.
S503E	530	58'-8"	Str.	P505E	22	10'-7"	Str.
S504E to S528E	2 ea.	3'-1" to 56'-9"	Str.	P506E	44	11'-7"	Str.
				P507E	12	39'-8"	Str.
S529E to S561E	2 ea.	3'-9" to 56'-9"	Str.	P508E	24	54'-8"	Str.
				P509E	12	59'-8"	Str.
S562E	2	31'-10"	3 3/4"				
S563E	2	32'-0"	3 3/4"				
S564E	2	31'-4"	3 3/4"				
S565E	2	31'-3"	3 3/4"				
S601E	116	30'-0"	Str.				
S602E	58	40'-0"	Str.				
S701E	554	12'-0"	5 1/4"				
P401E	1056	6'-8"	3 3/4"				
P402E	70	8'-0"	2"				

Bending Diagrams
(Dimensions are out to out of bars.)

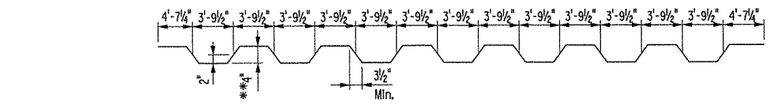

S502E

	A	B	C
S562E	30'-7"	1'-3"	3 11/16
S563E	30'-7"	1'-5"	3 5/8
S564E	30'-0"	1'-4"	2 3/4
S565E	30'-0"	1'-3"	2 11/16

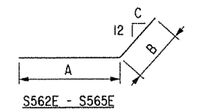

S562E - S565E

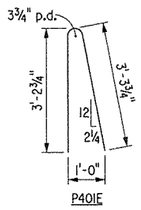

P401E

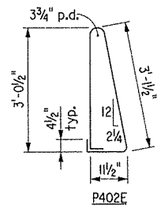

P402E

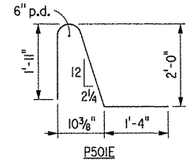

P501E

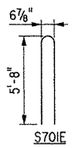

S701E

** ½" Overtolerance, No Undertolerance

Note: All bars designated with an "E" suffix are to be epoxy coated.

SUPERSTRUCTURE BAR LIST - BRIDGE B

Mark	No. Req'd.	Length	Pin Dia.	Mark	No. Req'd.	Length	Pin Dia.
S401E	552	36'-9"	str.	P501E	1056	5'-7"	3 3/4"
				P502E	40	9'-8"	str.
S500E	263	36'-2"	3"	P503E	122	10'-8"	str.
S501E	450	58'-1"	str.	P504E	94	11'-8"	str.
S502E	263	35'-4"	3"	P505E	22	10'-7"	str.
S503E	1086	35'-1"	str.	P506E	44	11'-7"	str.
S504E to S510E	2 ea.	31'-3" to 17'-10"	str.	P507E	12	39'-8"	str.
				P508E	24	54'-8"	str.
S511E to S530E	2 ea.	48'-0" to 4'-9"	str.	P509E	12	59'-8"	str.
S531E to S538E	2 ea.	31'-0" to 19'-1"	str.				
S539E to S566E	2 ea.	49'-10" to 4'-9"	str.				
S567E	2	35'-5"	3 3/4"				
S568E	2	36'-3"	3 3/4"				
S569E	2	35'-11"	3 3/4"				
S570E	2	36'-10"	3 3/4"				
S601E	138	30'-0"	str.				
S602E	69	40'-0"	str.				
S701E	556	14'-0"	5 1/4"				
P401E	1056	6'-8"	3 3/4"				
P402E	70	8'-0"	2				

Bending Diagrams
(Dimensions are out to out of bars.)

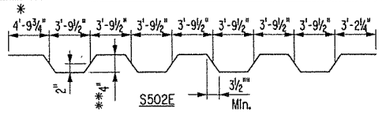

S502E

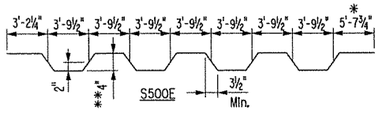

S500E

	A	B	C
S567E	34'-1"	1'-4"	2 11/16
S568E	34'-1"	2'-2"	2 5/8
S569E	34'-7"	1'-4"	3 1/16
S570E	34'-7"	2'-3"	3 5/8

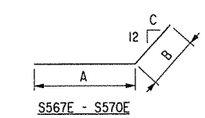

S567E - S570E

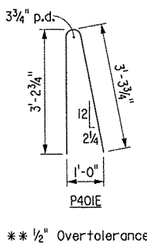

P401E

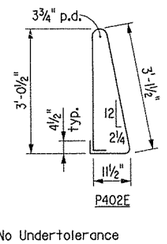

P402E

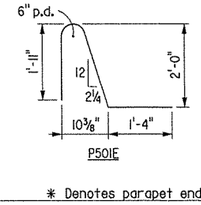

P501E

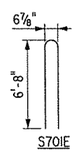

S701E

** ½" Overtolerance, No Undertolerance

* Denotes parapet end of bar.

Note: All bars designated with an "E" suffix are to be epoxy coated.



BRIDGE ENGINEER

SHEET 6 OF 6
COMMON DETAILS OF CONTINUOUS
COMPOSITE W-BEAM UNIT
REDMOND ROAD

ROUTE 67 SEC. 10

ARKANSAS STATE HIGHWAY COMMISSION

LITTLE ROCK, ARK.

DRAWN BY: BEG DATE: 1-13 FILENAME: b061276ml sll.dgn
CHECKED BY: GS DATE: 03-01-13 SCALE: As Shown
DESIGNED BY: BEG DATE: 1-13

BRIDGE NO. A&B7282 DRAWING NO. 53610

DATE REVISED	DATE FILMED	DATE REVISED	DATE FILMED	FED. ROAD DIST. NO.	STATE	FED. AID PROJ. NO.	SHEET NO.	TOTAL SHEETS
				6	ARK.			
				JOB NO.		061276	207	438
				(1) B7282		END BENT DETAILS		53611

NOTE: Class I Protective Surface Treatment shall be applied to the roadway face and top of the end bent rail and the top of the backwall.

* Dimension shown are to C.L. Joint

** Measured Along Gutterline

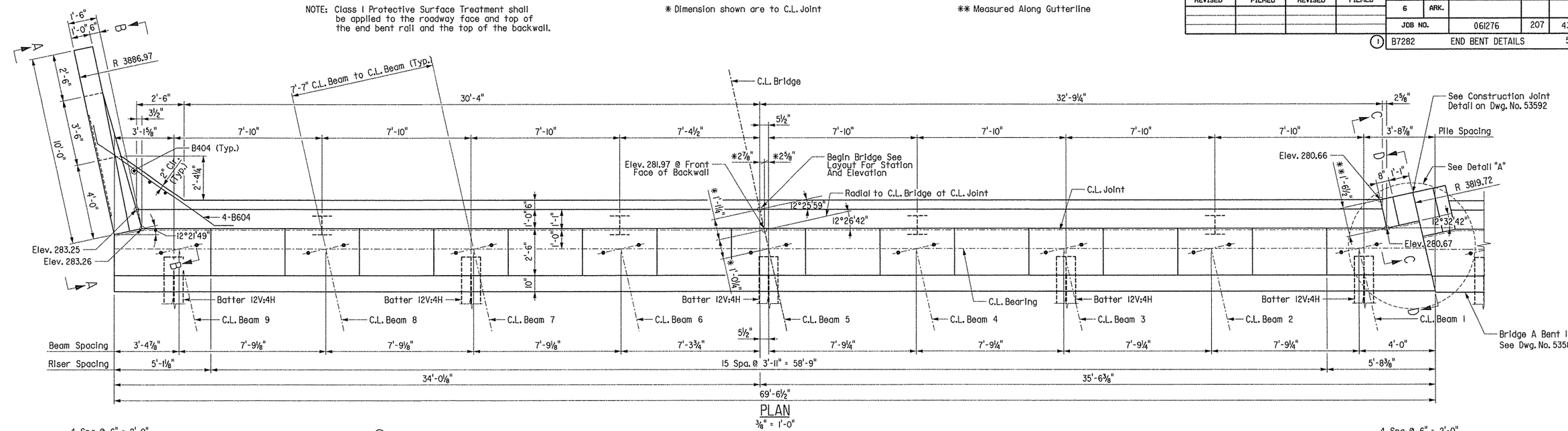

PLAN
⅜" = 1'-0"

(1) Adjust spacing of D601E bars as necessary to provide 3" clear from the longitudinal construction joint between the approach slab and gutters.

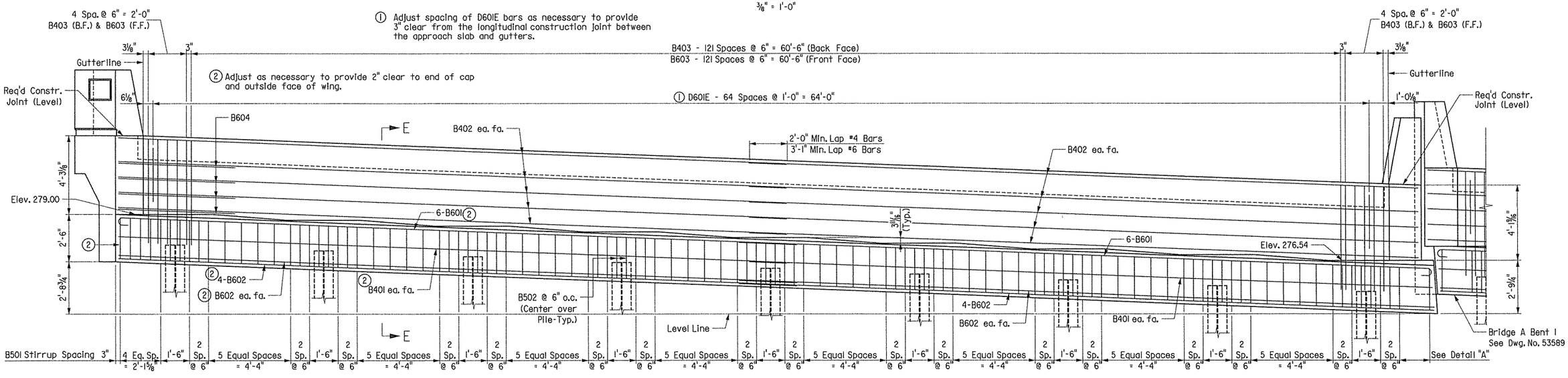

ELEVATION
⅜" = 1'-0"
(Looking Back)

BEAM	"A"
1	12°33'37"
2	12°32'06"
3	12°30'36"
4	12°30'36"
5	12°27'36"
6	12°26'06"
7	12°24'37"
8	12°23'08"
9	12°21'40"

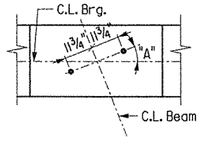

TYPICAL ANCHOR BOLT LAYOUT
No Scale

For GENERAL NOTES FOR SUBSTRUCTURE and Detail at Pile Top, see Dwg. No. 53592.

For VIEW A-A, VIEW B-B, VIEW C-C and VIEW D-D, see Dwg. Nos. 53612-53613.

For additional information, see LAYOUT on Dwg. No. 53582.

For Details of Wing and Rail, see Dwg. No. 53592.

For Bar List, see Dwg. No. 53613.

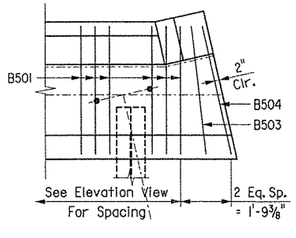

DETAIL "A"
Scale: ⅜" = 1'-0"

STATE OF ARKANSAS
REGISTERED PROFESSIONAL ENGINEER
No. 11339
8-19-13
LARRY W. MILLER
BRIDGE ENGINEER

SHEET 1 OF 3
BRIDGE B
DETAILS OF BENT 1
REDMOND ROAD

ROUTE 67 SEC. 10

ARKANSAS STATE HIGHWAY COMMISSION
LITTLE ROCK, ARK.

DRAWN BY: BEG DATE: 2-13
CHECKED BY: GS DATE: 03-01-13
DESIGNED BY: BEG DATE: 2-13

FILENAME: b061276bl_bll.dgn
SCALE: As Shown

BRIDGE NO. B7282 DRAWING NO. 53611

DATE REVISED	DATE FILMED	DATE REVISED	DATE FILMED	FED. ROAD DIST. NO.	STATE	FED. AID PROJ. NO.	SHEET NO.	TOTAL SHEETS
				6	ARK.			
				JOB NO.		061276	208	438
				(1) B7282		END BENT DETAILS		53612

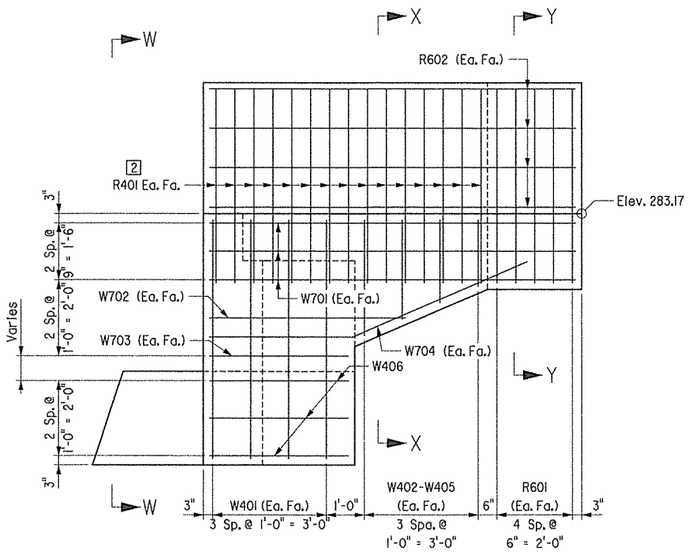

VIEW B-B
Scale: ½" = 1'-0"

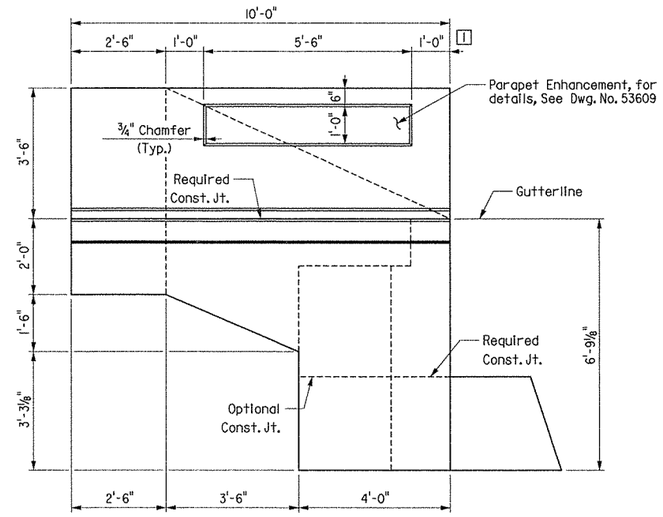

VIEW A-A
Scale: ½" = 1'-0"

1 Parapet Enhancement shall be made continuous if slip forms are used on bridge parapet rail.

2 Bend R401 in field as necessary to match rail face. Pin Dia. = 4"

3 Guard rail connection is not required on all bents. See Dwg. No. 53583 or roadway plans for location of guard rail connections.

For GENERAL NOTES FOR SUBSTRUCTURE, see Dwg. No. 53592.

For "DETAIL X", see Dwg. No. 53592.

For additional information, see LAYOUT on Dwg. No. 53582.

For Bar List, see Dwg. No. 53613.

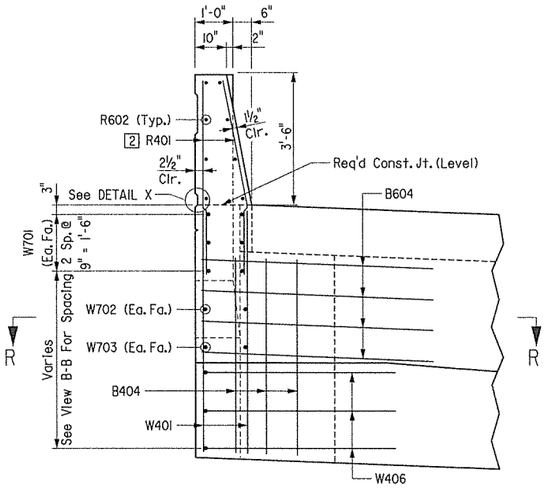

VIEW W-W
Scale: ½" = 1'-0"

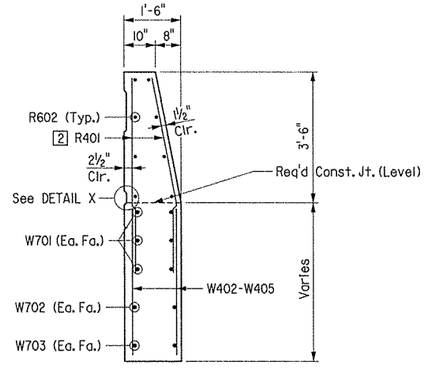

SECTION X-X
Scale: ½" = 1'-0"

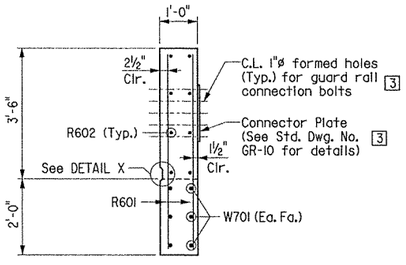

SECTION Y-Y
Scale: ½" = 1'-0"

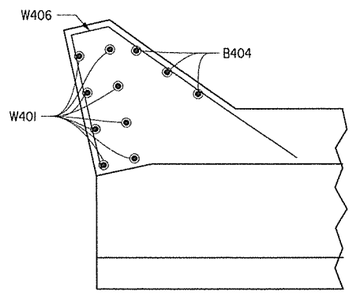

SECTION R-R
Scale: ½" = 1'-0"

STATE OF ARKANSAS
REGISTERED PROFESSIONAL ENGINEER
No. 13339
LARRY W. MILLER
8-19-13
BRIDGE ENGINEER

SHEET 2 OF 3
BRIDGE B
DETAILS OF BENT 1
REDMOND ROAD

ROUTE 67 SEC. 10

ARKANSAS STATE HIGHWAY COMMISSION

LITTLE ROCK, ARK.

DRAWN BY: BEG DATE: 2-13
CHECKED BY: GS DATE: 03-01-13
DESIGNED BY: BEG DATE: 2-13

FILENAME: b061276bl_bl2.dgn
SCALE: As Shown

BRIDGE NO. B7282 DRAWING NO. 53612

DATE REVISED	DATE FILMED	DATE REVISED	DATE FILMED	FED. ROAD DIST. NO.	STATE	FED. AID PROJ. NO.	SHEET NO.	TOTAL SHEETS
				6	ARK.			
				JOB NO.		061276	209	438
				(1) B7282		END BENT DETAILS		53613

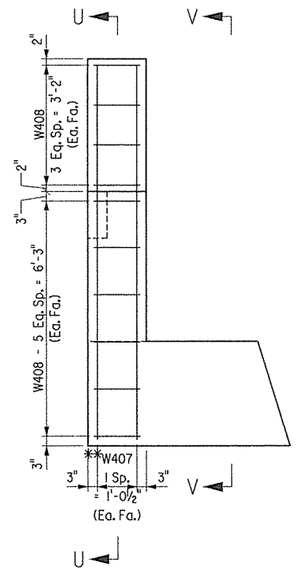

VIEW C-C
Scale: ½" = 1'-0"

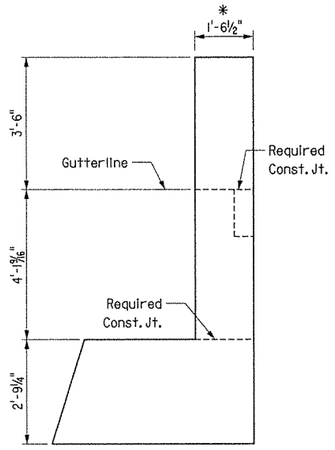

VIEW D-D
Scale: ½" = 1'-0"

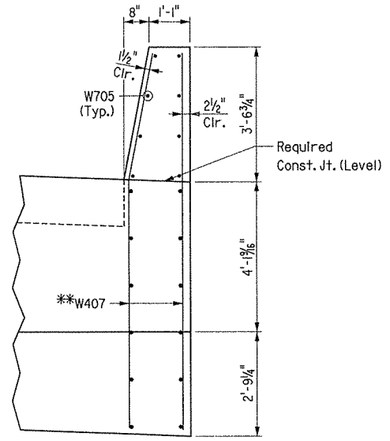

VIEW V-V
Scale: ½" = 1'-0"

*Measured Along Gutterline.

**Bend W407 in field, as necessary to match rail face. Pin Dia. = 4".

For GENERAL NOTES FOR SUBSTRUCTURE, see Dwg. No. 53592.

For "DETAIL Z", see Dwg. No. 53592.

For additional information, see LAYOUT on Dwg. No. 53582.

Note: All bars designated with an "E" suffix are to be epoxy coated.

BAR LIST - BENT I

Mark	No. Req'd	Length	Pin Dia.
B401	4	35'-9"	Str.
B402	20	35'-4"	Str.
B403	132	4'-3"	Str.
B404	3	5'-1"	Str.
B501	88	12'-11"	2½"
B502	18	7'-10"	2½"
B503	1	13'-0"	2½"
B504	1	13'-1"	2½"
B601	12	36'-11"	4½"
B602	12	36'-3"	Str.
B603	132	8'-6"	4½"
B604	4	9'-6"	4½"
B605	18	2'-10"	4½"
D601E	65	5'-11"	4½"
R401	30	5'-2"	Str.
R601	10	5'-2"	Str.
R602	8	9'-8"	Str.
W401	8	6'-3"	Str.
W402 to W405	2 ea.	3'-0" to 1'-9"	Str.
W406	3	10'-7"	3"
W407	4	9'-11"	Str.
W408	20	1'-2"	Str.
W701	6	9'-8"	Str.
W702	2	5'-2"	Str.
W703	2	3'-8"	Str.
W704	2	8'-9"	5¼"

BENDING DIAGRAMS
(Dimensions are out to out of bars)

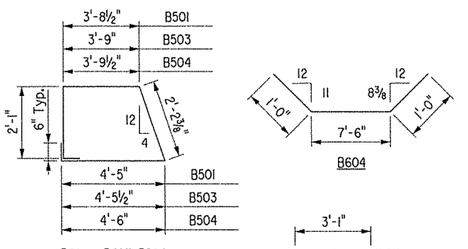

B501 & B503-B504

B604

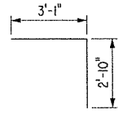

D601E

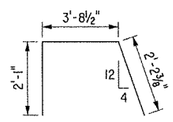

B502

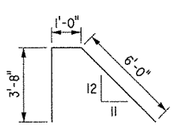

W406

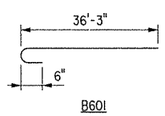

B601

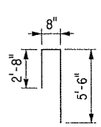

B603

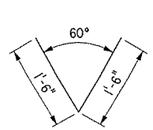

B605

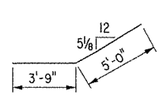

W704

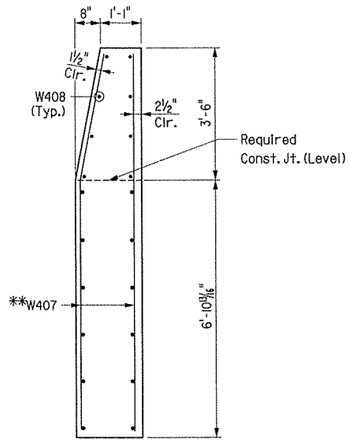

SECTION U-U
Scale: ½" = 1'-0"

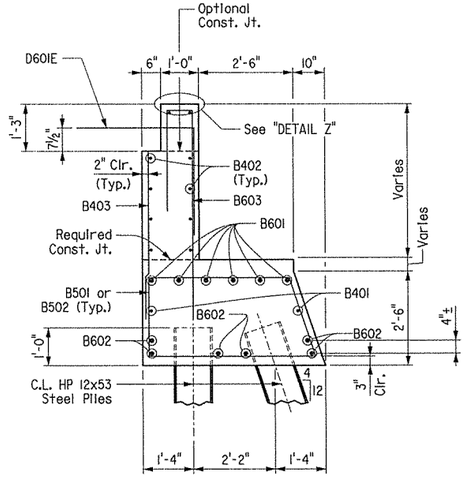

SECTION E-E
Scale: ½" = 1'-0"

STATE OF ARKANSAS
REGISTERED PROFESSIONAL ENGINEER
No. 11339
LARRY W. MILLER
8-19-13
BRIDGE ENGINEER

SHEET 3 OF 3
BRIDGE B
DETAILS OF BENT I
REDMOND ROAD

ROUTE 67 SEC. 10

ARKANSAS STATE HIGHWAY COMMISSION
LITTLE ROCK, ARK.

DRAWN BY: BEG DATE: 2-13
CHECKED BY: GS DATE: 03-01-13
DESIGNED BY: BEG DATE: 2-13

FILENAME: b061276bl_bl3.dgn
SCALE: As Shown

BRIDGE NO. B7282 DRAWING NO. 53613

DATE REVISED	DATE FILMED	DATE REVISED	DATE FILMED	FED. ROAD DIST. NO.	STATE	FED. AID PROJ. NO.	SHEET NO.	TOTAL SHEETS
				6	ARK.			
				JOB NO.		061276	210	438
				(1) B7282		INTERIOR BENT DETAILS		53614

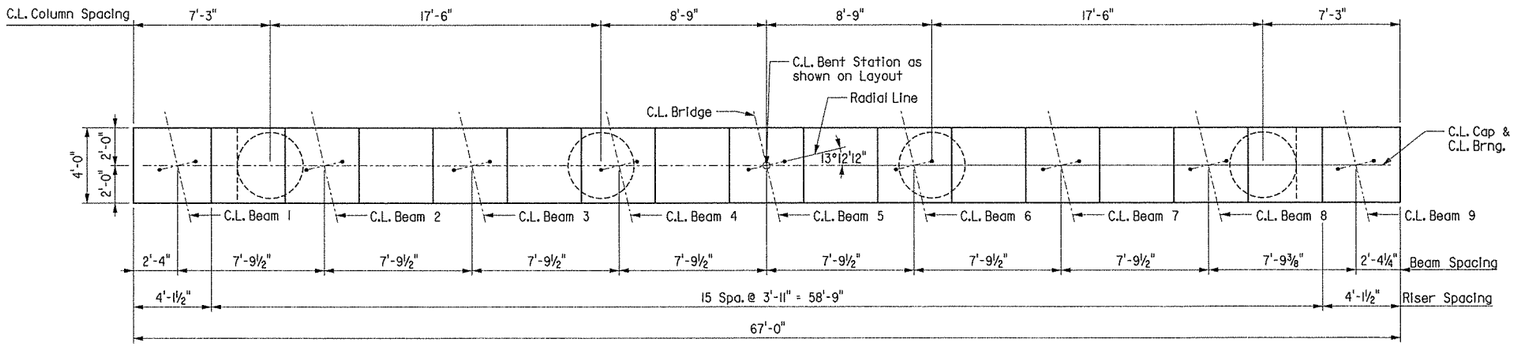

PLAN
¼" = 1'-0"

BEAM	"A"
1	13°18'35"
2	13°16'58"
3	13°15'22"
4	13°13'46"
5	13°12'11"
6	13°10'36"
7	13°09'01"
8	13°07'27"
9	13°05'53"

"M" = 11¾"

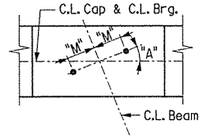

TYPICAL ANCHOR BOLT LAYOUT
No Scale

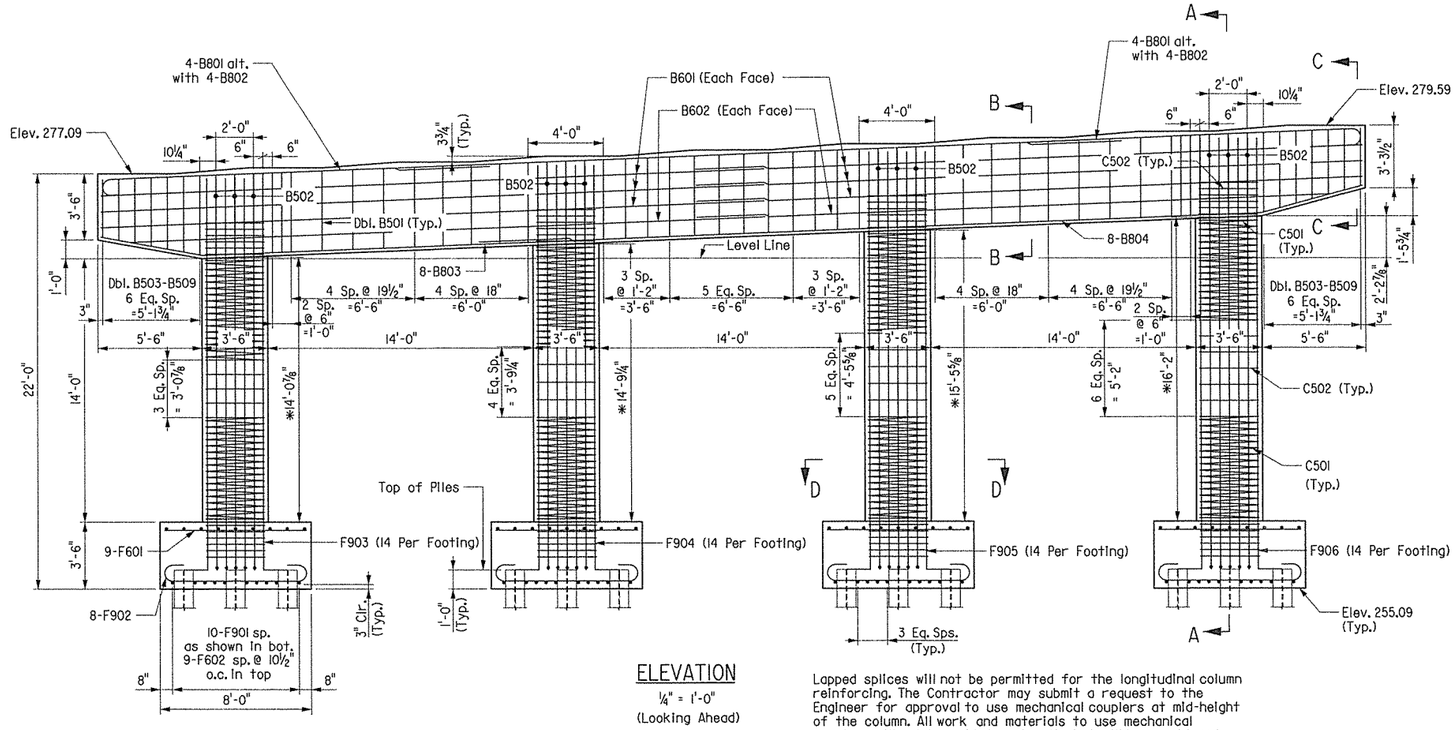

ELEVATION
¼" = 1'-0"
(Looking Ahead)

Lapped splices will not be permitted for the longitudinal column reinforcing. The Contractor may submit a request to the Engineer for approval to use mechanical couplers at mid-height of the column. All work and materials to use mechanical couplers will not be paid for directly but will be considered subsidiary to the item "Reinforcing Steel - Bridge (Grade 60)".

BAR LIST

Mark	Number Required	Dim. "A"	Length	Pin Dia.
B501	68	--	13'-7"	2½"
B502	12	--	11'-10"	2½"
B503 to B509	4 ea.	--	11'-4" to 13'-9"	2½"
B601	12	--	35'-2"	Str.
B602	4	--	33'-7"	Str.
B801	8	18'-3"	19'-2"	6"
B802	8	53'-3"	54'-2"	6"
B803	8	5'-5"	27'-1"	6"
B804	8	5'-6"	44'-8"	6"
C501	8	--	183'-8"	Spiral
C502	79	--	12'-2"	3¾"
F601	36	--	7'-6"	Str.
F602	36	--	9'-6"	Str.
F603	48	--	2'-10"	4½"
F901	40	9'-6"	12'-0"	9"
F902	32	7'-6"	10'-0"	9"
F903	14	20'-9"	22'-1"	9"
F904	14	21'-5"	22'-9"	9"
F905	14	22'-2"	23'-6"	9"
F906	14	22'-10"	24'-2"	9"

Bending Diagrams (Dimensions are out to out of bars.)

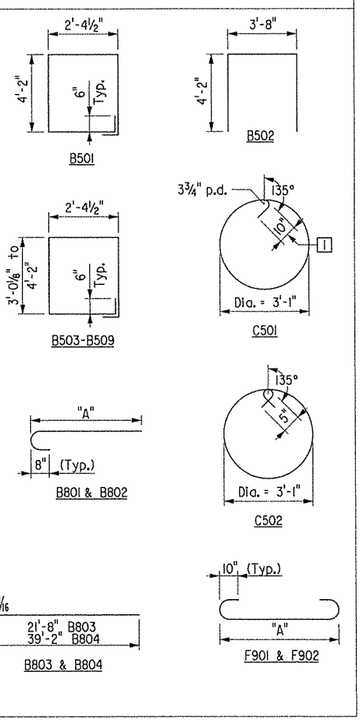

1 At each end of spiral. Hook may be field bent around a vertical bar.

Minimum Lap Splice Lengths:
#8 Bar: 4'-9"
#6 Bar: 3'-7"

For sections, detail at pile top and footing plan, see Dwg. No. 53617.

For substructure general notes, see Dwg. No. 53592.

*Measured along C.L. of column

STATE OF ARKANSAS
Larry W. Miller
REGISTERED PROFESSIONAL ENGINEER
No. 11339
8/19/13
LARRY W. MILLER
BRIDGE ENGINEER

BRIDGE B
DETAILS OF BENT 2
REDMOND ROAD

ROUTE 67 SEC. 10

ARKANSAS STATE HIGHWAY COMMISSION
LITTLE ROCK, ARK.

DRAWN BY: AM DATE: 02-13
CHECKED BY: GS DATE: 03-01-13
DESIGNED BY: LM DATE: 01-13
FILENAME: b061276bl_b2.dgn
SCALE: As Shown

BRIDGE NO. B7282 DRAWING NO. 53614

DATE REVISED	DATE FILMED	DATE REVISED	DATE FILMED	FED. ROAD DIST. NO.	STATE	FED. AID PROJ. NO.	SHEET NO.	TOTAL SHEETS
				6	ARK.			
				JOB NO.		061276	211	438
				(1) B7282		INTERIOR BENT DETAILS		53615

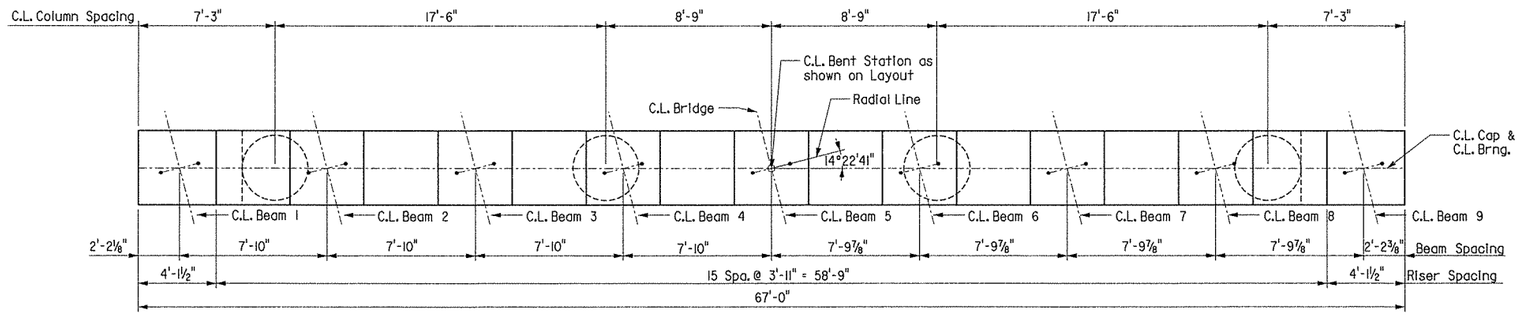

PLAN

¼" = 1'-0"

BEAM	"A"
1	14°29'39"
2	14°27'54"
3	14°26'09"
4	14°24'24"
5	14°22'40"
6	14°20'56"
7	14°19'12"
8	14°17'29"
9	14°15'47"

"M" = 12¼"

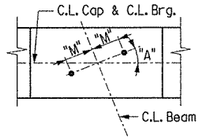

TYPICAL ANCHOR BOLT LAYOUT

No Scale

Lapped splices will not be permitted for the longitudinal column reinforcing. The Contractor may submit a request to the Engineer for approval to use mechanical couplers at mid-height of the column. All work and materials to use mechanical couplers will not be paid for directly but will be considered subsidiary to the item "Reinforcing Steel - Bridge (Grade 60)".

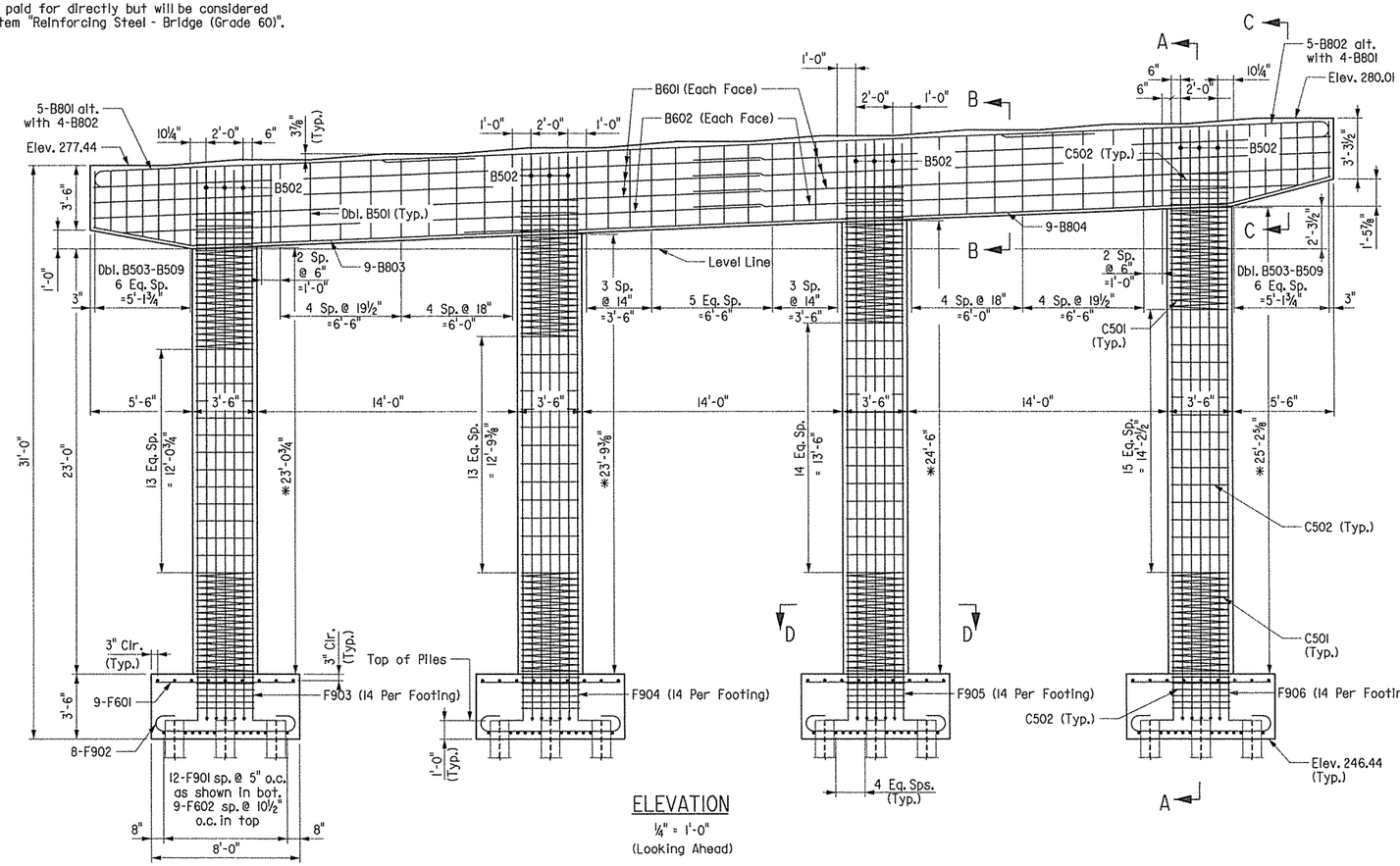

ELEVATION

¼" = 1'-0"

(Looking Ahead)

Minimum Lap Splice Lengths:
#8 Bar: 4'-9"
#6 Bar: 3'-7"

For sections, detail at pile top and footing plan, see Dwg. No. 53617.

For substructure general notes, see Dwg. No. 53592.

*Measured along C.L. of column

BAR LIST

Mark	Number Required	Dim. "A"	Length	Pin Dia.
B501	68	--	13'-7"	2½"
B502	12	--	11'-10"	2½"
B503 to B509	4 ea.	--	11'-4" to 13'-9"	2½"
B601	12	--	35'-2"	Str.
B602	4	--	33'-7"	Str.
B801	9	18'-3"	19'-2"	6"
B802	9	53'-3"	54'-2"	6"
B803	9	5'-5"	27'-1"	6"
B804	9	5'-6"	44'-8"	6"
C501	8	--	183'-8"	Spiral
C502	115	--	12'-2"	3¾"
F601	36	--	7'-6"	Str.
F602	36	--	9'-6"	Str.
F603	48	--	2'-10"	4½"
F901	48	9'-6"	12'-0"	9"
F902	32	7'-6"	10'-0"	9"
F903	14	29'-9"	31'-1"	9"
F904	14	30'-5"	31'-9"	9"
F905	14	31'-2"	32'-6"	9"
F906	14	31'-10"	33'-2"	9"

Bending Diagrams (Dimensions are out to out of bars.)

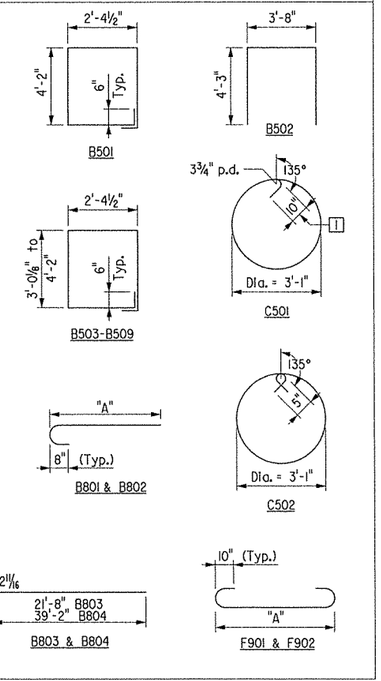

1 At each end of spiral. Hook may be field bent around a vertical bar.

STATE OF ARKANSAS
REGISTERED PROFESSIONAL ENGINEER
No. 11339
LARRY W. MILLER
9-19-13

BRIDGE ENGINEER

BRIDGE B
DETAILS OF BENT 3
REDMOND ROAD

ROUTE 67 SEC. 10

ARKANSAS STATE HIGHWAY COMMISSION

LITTLE ROCK, ARK.

DRAWN BY: AM DATE: 02-13
CHECKED BY: GS DATE: 03-01-13
DESIGNED BY: LM DATE: 01-13

FILENAME: b061276bl_b3.dgn
SCALE: As Shown

BRIDGE NO. B7282 DRAWING NO. 53615

DATE REVISED	DATE FILMED	DATE REVISED	DATE FILMED	FED. ROAD DIST. NO.	STATE	FED. AID PROJ. NO.	SHEET NO.	TOTAL SHEETS
				6	ARK.			
				JOB NO.		061276	212	438
				(1) B7282		INTERIOR BENT DETAILS		53616

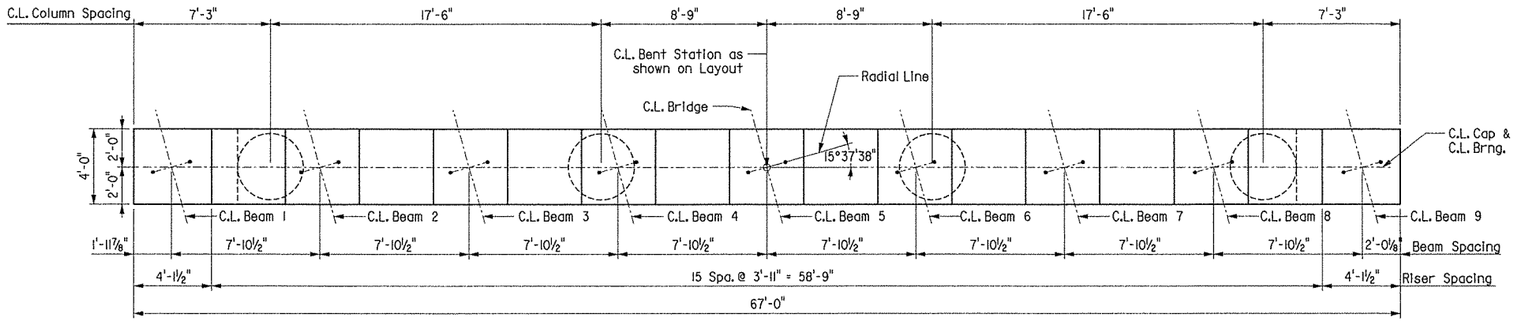

PLAN
¼" = 1'-0"

BEAM	"A"
1	15°45'13"
2	15°43'18"
3	15°41'24"
4	15°39'29"
5	15°37'36"
6	15°35'42"
7	15°33'50"
8	15°31'57"
9	15°30'05"

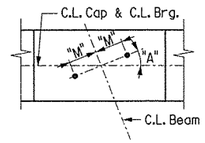

"M" = 12¼"

TYPICAL ANCHOR BOLT LAYOUT
No Scale

Lapped splices will not be permitted for the longitudinal column reinforcing. The Contractor may submit a request to the Engineer for approval to use mechanical couplers at mid-height of the column. All work and materials to use mechanical couplers will not be paid for directly but will be considered subsidiary to the item "Reinforcing Steel - Bridge (Grade 60)".

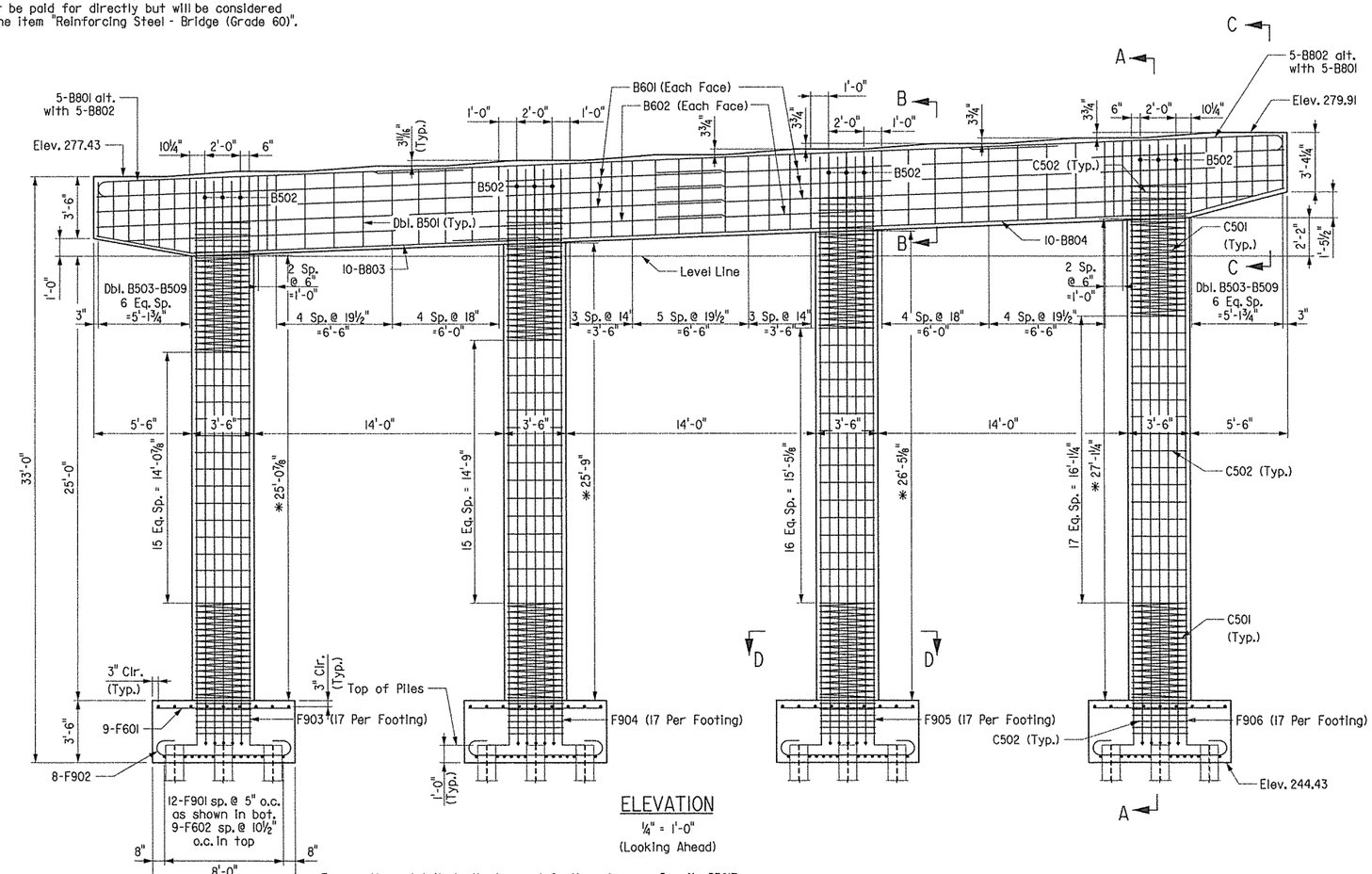

ELEVATION
¼" = 1'-0"
(Looking Ahead)

For sections, detail at pile top and footing plan, see Dwg. No. 53617.

For substructure general notes, see Dwg. No. 53592.

*Measured along C.L. of column

Minimum Lap Splice Lengths:
#8 Bar: 4'-9"
#6 Bar: 3'-7"

BAR LIST

Mark	Number Required	Dim. "A"	Length	Pin Dia.
B501	66	--	13'-7"	2½"
B502	12	--	11'-10"	2½"
B503 to B509	4 ea.	--	11'-4" to 13'-9"	2½"
B601	12	--	35'-2"	Str.
B602	4	--	33'-7"	Str.
B801	10	18'-3"	19'-2"	6"
B802	10	53'-3"	54'-2"	6"
B803	10	5'-5"	27'-1"	6"
B804	10	5'-6"	44'-8"	6"
C501	8	--	183'-8"	Spiral
C502	123	--	12'-2"	3¾"
F601	36	--	7'-6"	Str.
F602	36	--	9'-6"	Str.
F603	48	--	2'-10"	4½"
F901	48	9'-6"	12'-0"	9"
F902	32	7'-6"	10'-0"	9"
F903	17	31'-9"	33'-1"	9"
F904	17	32'-5"	33'-9"	9"
F905	17	33'-2"	34'-6"	9"
F906	17	33'-10"	35'-2"	9"

Bending Diagrams (Dimensions are out to out of bars.)

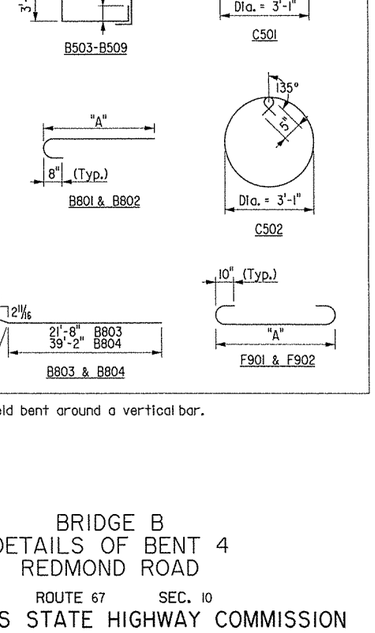

1 At each end of spiral. Hook may be field bent around a vertical bar.

STATE OF ARKANSAS
REGISTERED PROFESSIONAL ENGINEER
No. 11339
LARRY W. MILLER
8-19-13
BRIDGE ENGINEER

BRIDGE B
DETAILS OF BENT 4
REDMOND ROAD

ROUTE 67 SEC. 10

ARKANSAS STATE HIGHWAY COMMISSION
LITTLE ROCK, ARK.

DRAWN BY: AM DATE: 02-13 FILENAME: b061276b1 b41.dgn
CHECKED BY: GS DATE: 03-01-13 SCALE: As Shown
DESIGNED BY: LM DATE: 01-13

BRIDGE NO. B7282 DRAWING NO. 53616

DATE REVISED	DATE FILMED	DATE REVISED	DATE FILMED

FED. ROAD DIST. NO.	STATE	FED. AID PROJ. NO.	SHEET NO.	TOTAL SHEETS
6	ARK.			
JOB NO.		061276	213	438
(1) B7282	INTERIOR BENT DETAILS			53617

NOTES FOR SPIRAL REINFORCING

Spiral reinforcing shall be plain round or deformed steel bars meeting the requirements of AASHTO M31 or M322 Type A (Grade 60) or shall be cold drawn wire meeting the requirements of AASHTO M32 or M225 (Grade 70) with a minimum diameter of 0.625".

Spiral reinforcement shall be paid for at the contract unit price bid per pound for "Reinforcing Steel-Bridge (Grade 60)". No additional payment shall be made for spacers, additional splices, or bracing needed for assembly, shipping, handling, or erecting.

Ends of spirals shall be terminated with 1½ turns and a 135° hook with a 10" tall around a vertical bar.

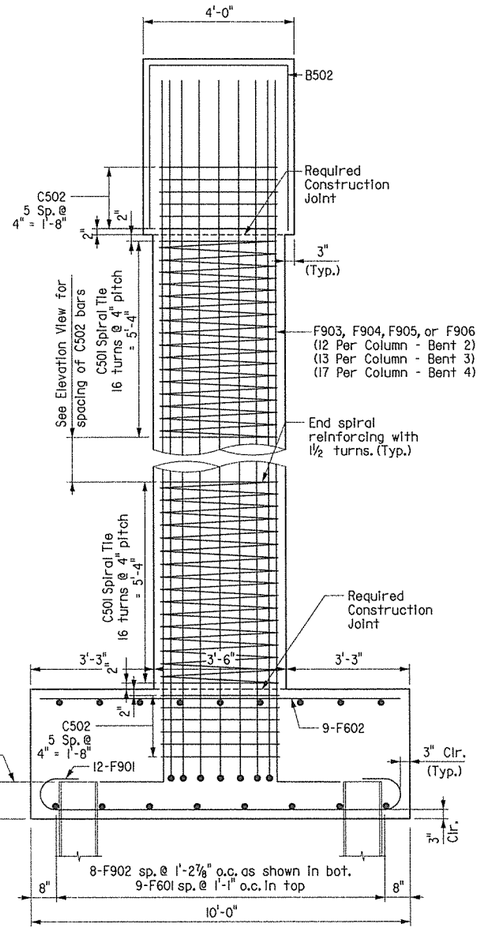

SECTION A-A

½" = 1'-0"

Minimum Lap Splice Lengths:
#8 Bar: 4'-9"
#6 Bar: 3'-7"

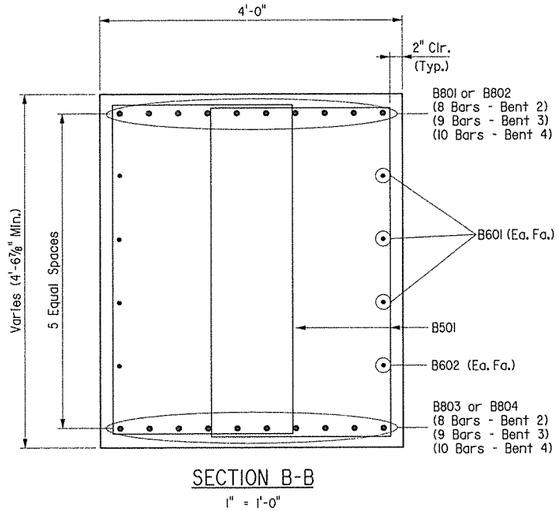

SECTION B-B

1" = 1'-0"

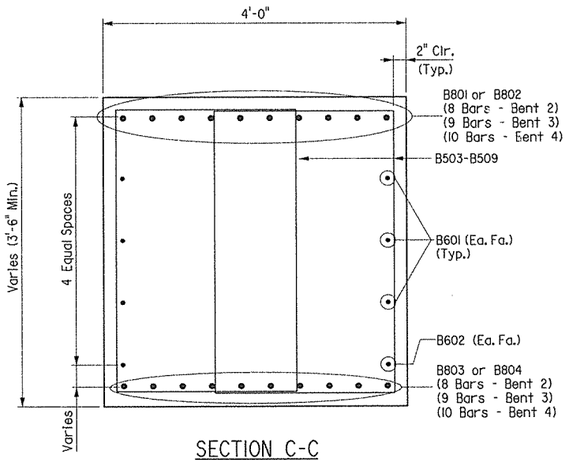

SECTION C-C

1" = 1'-0"

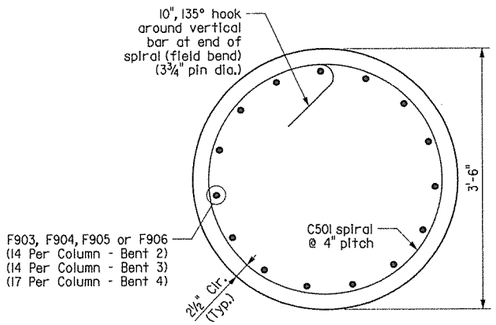

SECTION D-D

1" = 1'-0"

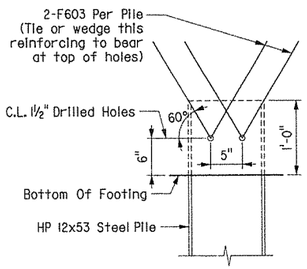

DETAIL AT PILE TOP

No Scale

Drilled holes will not be paid for directly but shall be considered incidental to the item "STEEL PILING (HP12x53)".

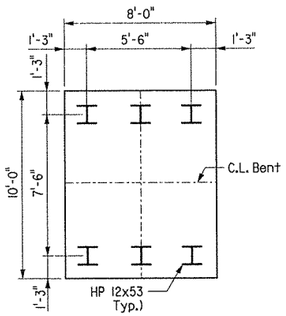

FOOTING PLAN

¼" = 1'-0"

STATE OF ARKANSAS
LARRY W. MILLER
REGISTERED PROFESSIONAL ENGINEER
No. 11339
3-24-14
LARRY W. MILLER
BRIDGE ENGINEER

BRIDGE B
COMMON INTERIOR BENT DETAILS
REDMOND ROAD

ROUTE 67 SEC. 10

ARKANSAS STATE HIGHWAY COMMISSION

LITTLE ROCK, ARK.

DRAWN BY: AM DATE: 02-13
CHECKED BY: GS DATE: 03-01-13
DESIGNED BY: LM DATE: 01-13
FILENAME: b061276b1_b42.dgn
SCALE: As Shown

BRIDGE NO. B7282 DRAWING NO. 53617

DATE REVISED	DATE FILMED	DATE REVISED	DATE FILMED	FED. ROAD DIST. NO.	STATE	FED. AID PROJ. NO.	SHEET NO.	TOTAL SHEETS
				6	ARK.			
				JOB NO.		061276	214	438
				① B7282		END BENT DETAILS		53618

NOTE: Class I Protective Surface Treatment shall be applied to the roadway face and top of the end bent rail and the top of the backwall.

* Dimension shown are to C.L. Joint

** Measured Along Gutterline

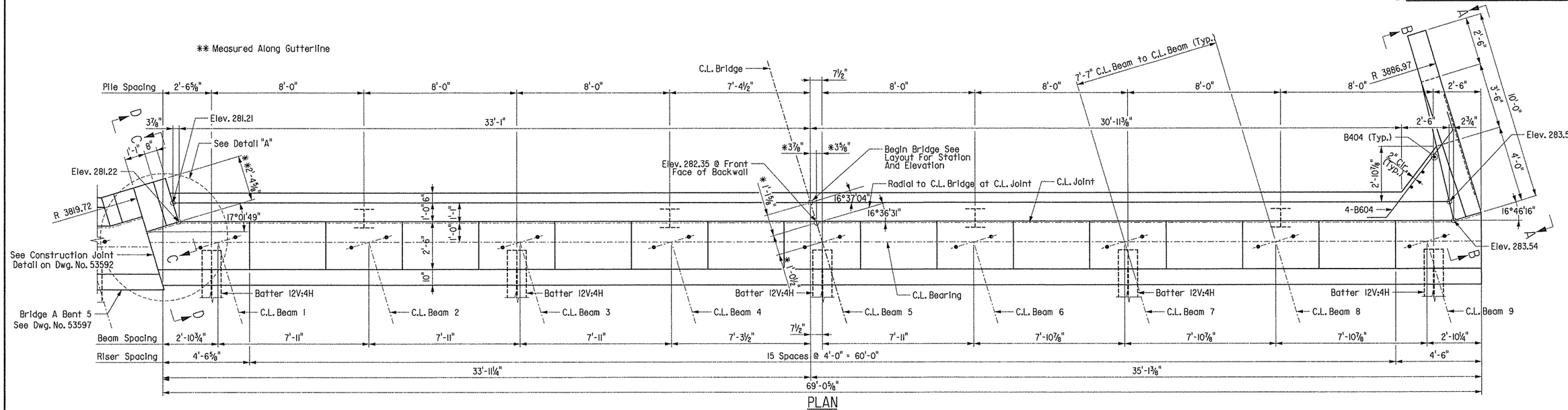

PLAN
⅜" = 1'-0"

① Adjust spacing of D601E bars as necessary to provide 3" clear from the longitudinal construction joint between the approach slab and gutters.

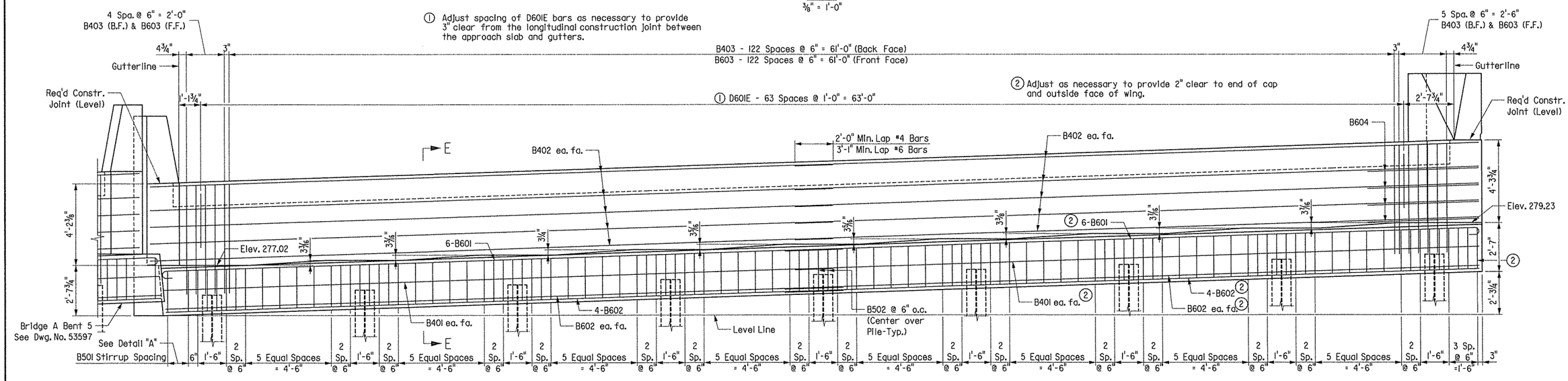

ELEVATION
⅜" = 1'-0"
(Looking Ahead)

BEAM	"A"
1	16°43'40"
2	16°41'38"
3	16°39'36"
4	16°37'34"
5	16°35'33"
6	16°33'32"
7	16°31'32"
8	16°29'32"
9	16°27'33"

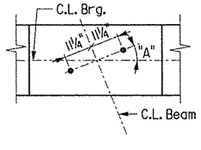

TYPICAL ANCHOR BOLT LAYOUT
No Scale

For GENERAL NOTES FOR SUBSTRUCTURE and Detail at Pile Top, see Dwg. No. 53592.

For sections and bar list, see Dwg. Nos. 53619-53620.

For additional information, see LAYOUT on Dwg. No. 53582.

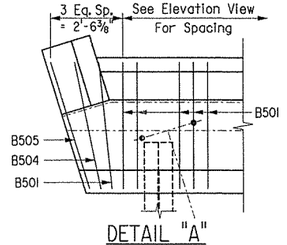

DETAIL "A"

STATE OF ARKANSAS
REGISTERED PROFESSIONAL ENGINEER
No. 11339
8-19-13
LARRY W. MILLER
BRIDGE ENGINEER

SHEET 1 OF 3
BRIDGE B
DETAILS OF BENT 5
REDMOND ROAD

ROUTE 67 SEC. 10

ARKANSAS STATE HIGHWAY COMMISSION
LITTLE ROCK, ARK.

DRAWN BY: BEG DATE: 2-13
CHECKED BY: GS DATE: 03-01-13
DESIGNED BY: BEG DATE: 2-13
FILENAME: b061276b1 b5l.dgn
SCALE: As Shown

BRIDGE NO. B7282 DRAWING NO. 53618

DATE REVISED	DATE FILMED	DATE REVISED	DATE FILMED	FED. ROAD DIST. NO.	STATE	FED. AID PROJ. NO.	SHEET NO.	TOTAL SHEETS
				6	ARK.			
				JOB NO.		061276	215	438
				(1) B7282		END BENT DETAILS		53619

* Parapet Enhancement shall be made continuous if slip forms are used on bridge parapet rail.

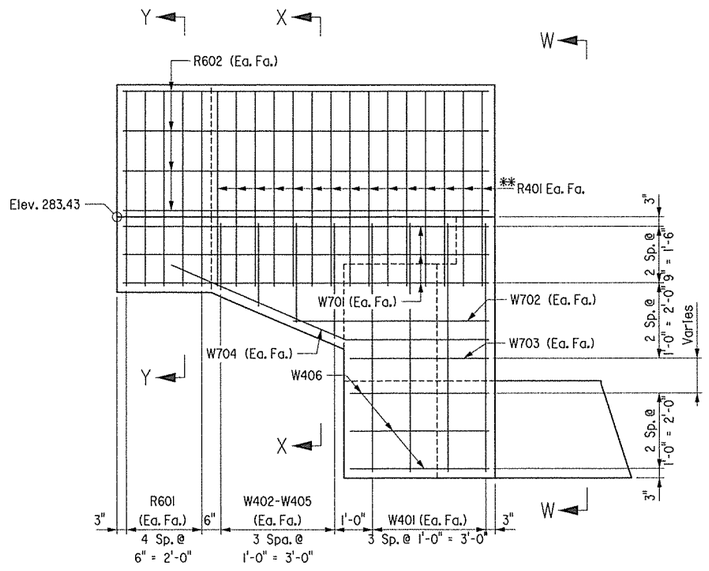

VIEW B-B
Scale: ½" = 1'-0"

**Bend R401 in Field as necessary to match rail face. Pin. Dia. = 4"

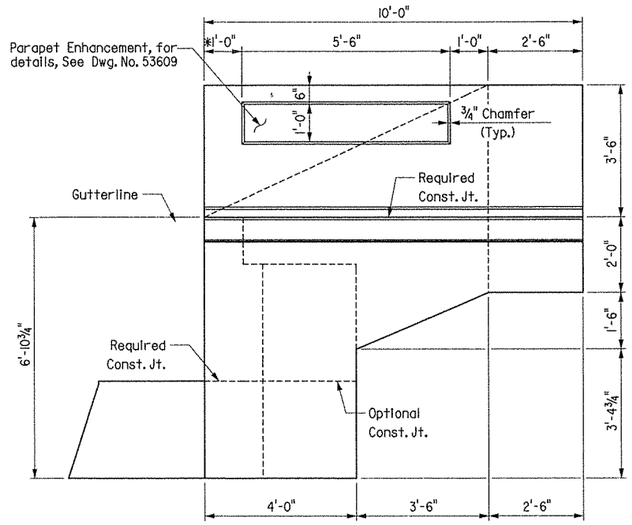

VIEW A-A
Scale: ½" = 1'-0"

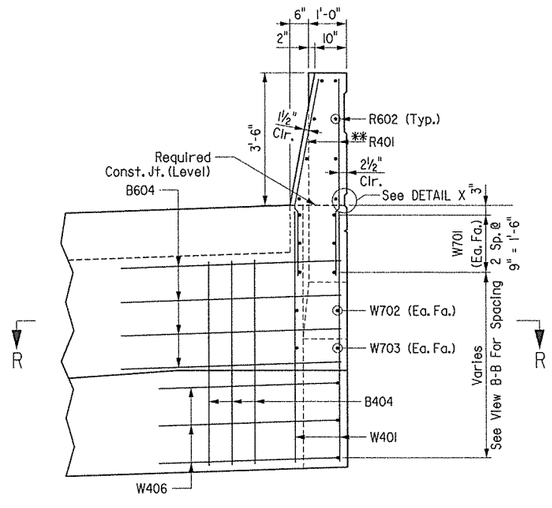

VIEW W-W
Scale: ½" = 1'-0"

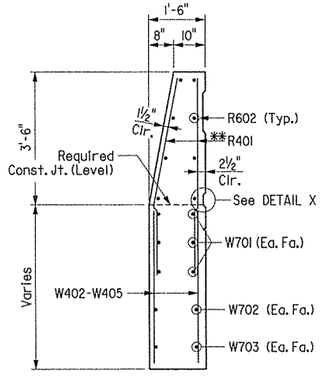

SECTION X-X
Scale: ½" = 1'-0"

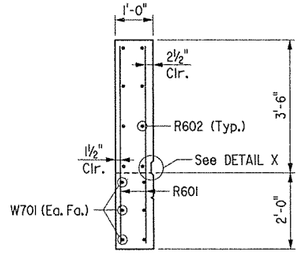

SECTION Y-Y
Scale: ½" = 1'-0"

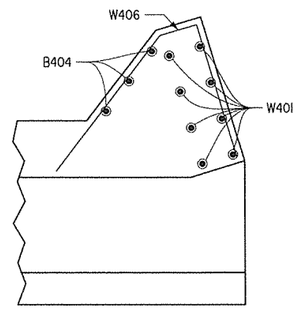

SECTION R-R
Scale: ½" = 1'-0"

For GENERAL NOTES FOR SUBSTRUCTURE, see Dwg. No. 53592.

For "DETAIL X", see Dwg. No. 53592.

For additional information, see LAYOUT on Dwg. No. 53582.

For Bar List, see Dwg. No. 53620.

STATE OF ARKANSAS REGISTERED PROFESSIONAL ENGINEER No. 11339 LARRY W. MILLER 8-19-13
BRIDGE ENGINEER

SHEET 2 OF 3
BRIDGE B
DETAILS OF BENT 5
REDMOND ROAD

ROUTE 67 SEC. 10

ARKANSAS STATE HIGHWAY COMMISSION
LITTLE ROCK, ARK.

DRAWN BY: BEG DATE: 2-13
CHECKED BY: GS DATE: 03-01-13
DESIGNED BY: BEG DATE: 2-13
FILENAME: b061276bl_b52.dgn
SCALE: As Shown

BRIDGE NO. B7282 DRAWING NO. 53619

DATE REVISED	DATE FILMED	DATE REVISED	DATE FILMED	FED. ROAD DIST. NO.	STATE	FED. AID PROJ. NO.	SHEET NO.	TOTAL SHEETS
				6	ARK.			
				JOB NO.		061276	216	438
				(1) B7282		END BENT DETAILS		53620

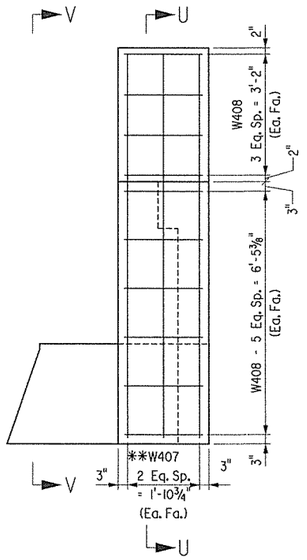

VIEW C-C
Scale: ½" = 1'-0"

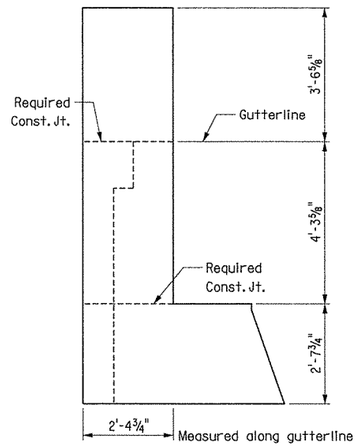

VIEW D-D
Scale: ½" = 1'-0"

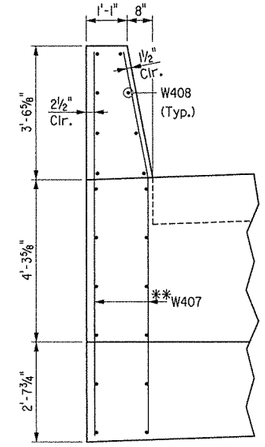

VIEW V-V
Scale: ½" = 1'-0"

Note: All bars designated with an "E" suffix are to be epoxy coated.

BAR LIST - BENT 5

Mark	No. Req'd	Length	Pin Dia.
B401	4	36'-2"	Str.
B402	20	36'-1"	Str.
B403	134	4'-5"	Str.
B404	3	5'-4"	Str.
B501	87	12'-11"	2½"
B502	18	7'-10"	2½"
B503	Not Used		
B504	1	13'-1"	2½"
B505	1	13'-3"	2½"
B601	12	37'-4"	4½"
B602	12	36'-8"	Str.
B603	134	8'-8"	4½"
B604	4	7'-9"	4½"
B605	18	2'-10"	4½"
D601E	64	5'-11"	4½"
R401	30	5'-2"	Str.
R601	10	5'-2"	Str.
R602	8	9'-8"	Str.
W401	8	6'-7"	Str.
W402 to W405	2 ea.	3'-0" to 1'-9"	Str.
W406	3	9'-1"	3"
W407	6	10'-2"	Str.
W408	20	2'-0"	Str.
W701	6	9'-8"	Str.
W702	2	5'-2"	Str.
W703	2	3'-8"	Str.
W704	2	8'-9"	5¼"

BENDING DIAGRAMS
(Dimensions are out to out of bars)

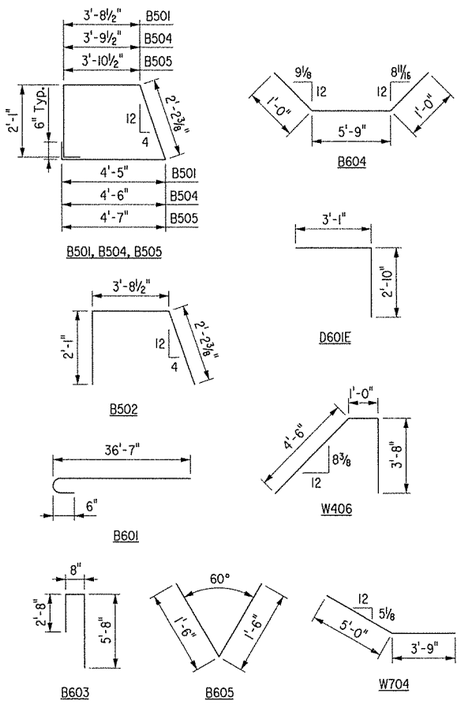

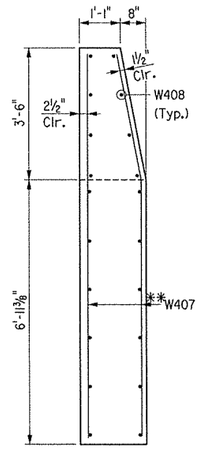

SECTION U-U
Scale: ½" = 1'-0"

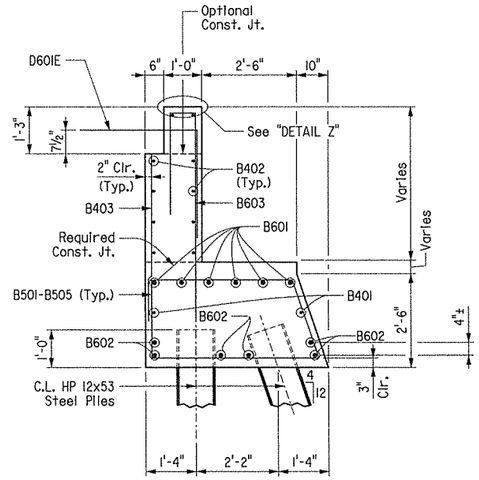

SECTION E-E
Scale: ½" = 1'-0"

** Bend W407 In Field, As Necessary To Match Rail Face. Pin Dia. = 4".

For GENERAL NOTES FOR SUBSTRUCTURE, see Dwg. No. 53592.

For "DETAIL X" and "DETAIL Z", see Dwg. No. 53592.

For additional information, see LAYOUT on Dwg. No. 53582.

STATE OF ARKANSAS
REGISTERED PROFESSIONAL ENGINEER
No. 13339
LARRY W. MILLER
5-19-13
BRIDGE ENGINEER

SHEET 3 OF 3
BRIDGE B
DETAILS OF BENT 5
REDMOND ROAD

ROUTE 67 SEC. 10

ARKANSAS STATE HIGHWAY COMMISSION
LITTLE ROCK, ARK.

DRAWN BY: BEG DATE: 2-13
CHECKED BY: GS DATE: 03-01-13
DESIGNED BY: BEG DATE: 2-13

FILENAME: b061276bl_b53.dgn
SCALE: As Shown

BRIDGE NO. B7282 DRAWING NO. 53620

DATE REVISED	DATE FILMED	DATE REVISED	DATE FILMED	FED. ROAD DIST. NO.	STATE	FED. AID PROJ. NO.	SHEET NO.	TOTAL SHEETS
				6	ARK.			
				JOB NO.		061276	217	438
				(1) B7282		SPAN DETAILS		53621

NOTES:

One Epoxy Coated #5 bar in the top and one Epoxy Coated #5 bar in the bottom may be substituted for each bar S500E & S502E. Payment will be based on the weight of bars S500E & S502E.

Class I Protective Surface Treatment shall be applied to the roadway surface and the top and roadway face railing.

All bars designated with an "E" suffix are to be epoxy coated.

(1) TOLERANCE:
Minus: 1/4"
Plus: Equal to amount of slab thickening used to meet slab thickness tolerance. See "ADJUSTMENT FOR SLAB THICKNESS TOLERANCE WHEN REMOVABLE DECK FORMING IS USED".

(2) See "ADJUSTMENT FOR SLAB THICKNESS TOLERANCE WHEN REMOVABLE DECK FORMING IS USED".

(3) Field bend transverse bars in this area to provide minimum clearances.

** Located with respect to Clear Roadway.

SLAB REINFORCING:

Transverse:
S500E @ 12" Centers (Bent up over beams)
S502E @ 12" Centers (Bent up over beams)
S503E @ 12" Centers (Top & Bottom)
S504E-S566E @ 6" Centers (Top & Bottom)
(4) S701E (Place as shown)
See DETAIL A on Dwg. No. 53623
Longitudinal:
S401E @ 12" Centers (Top)
S501E as shown (Bottom)
S601E @ 12" Centers (Top over Bents 2 & 4)
S602E @ 12" Centers Top over Bent 3)

For additional reinforcing details, see Dwg. No. 53622-53623, 53610.

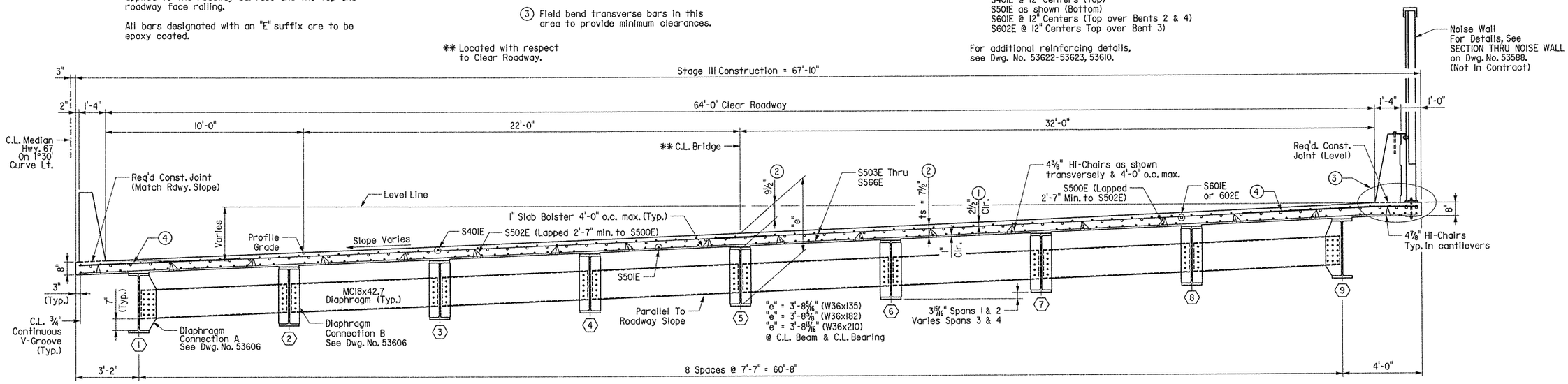

TYPICAL SECTION - STAGE III CONSTRUCTION

(Looking Ahead)
Scale: ⅜" = 1'-0"

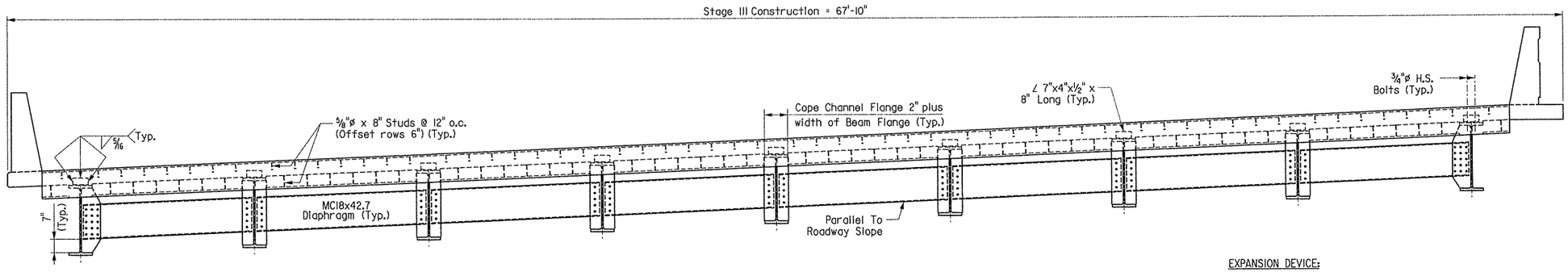

VIEW AT C.L. JOINT - STAGE III CONSTRUCTION

(Looking Ahead)
Scale: ⅜" = 1'-0"

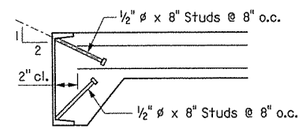

Note: As an alternate to ⅝" ø studs, ½" ø x 8" studs spaced as shown may be used. Use weight of ⅝" ø stud as basis of measurement of structural steel in anchors.

DETAIL OF ALTERNATE ANCHORS

No Scale

EXPANSION DEVICE:

Roadway Channel C15x33.9 (M 270, Gr. 50)
Connection ∠'s 7"x4"x½" x 8" Long
Detail Device ⅛" high & provide ¼" shims using 1 - ⅛" PL & 2 - 1/16" PL's

For additional details of Poured Silicone Joint, see Dwg. No. 53626.

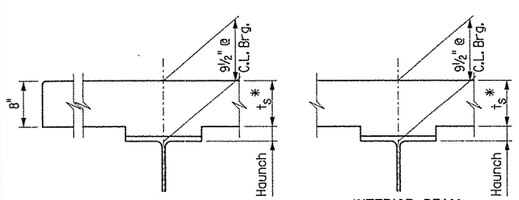

Note: ts = slab thickness as shown on "TYPICAL SECTION".
*Tolerance when removable deck forming is used is +½", -¼". Haunch forming is required and shall be adjusted to maintain slab thickness tolerance.

ADJUSTMENT FOR SLAB THICKNESS TOLERANCE WHEN REMOVABLE DECK FORMING IS USED

No Scale

Haunch dimension may vary within the following limits to maintain the grade and slab thickness tolerance; Minimum - top flange thickness minus 5/16"; Maximum - top flange thickness plus 2¼". No increase in concrete and structural steel quantities will be made to maintain tolerances.

Tolerances shown are applicable only when removable deck forming is used. See Std. Dwg. No. 55005 for tolerances when permanent steel deck forms are used. Payment for concrete shall be based on removable deck forming.

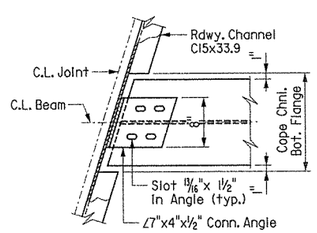

ROADWAY CHANNEL CONNECTION DETAIL

STATE OF ARKANSAS
Larry W. Miller
REGISTERED PROFESSIONAL ENGINEER
No. 11339
3-24-14
LARRY W. MILLER
BRIDGE ENGINEER

BRIDGE B
SHEET 1 OF 5
DETAILS OF 280'-0" CONTINUOUS COMPOSITE W-BEAM UNIT
REDMOND ROAD
ROUTE 67 SEC. 10
ARKANSAS STATE HIGHWAY COMMISSION
LITTLE ROCK, ARK.

DRAWN BY: DLM DATE: 2-13
CHECKED BY: GS DATE: 03-01-13
DESIGNED BY: DLM DATE: 2-13
FILENAME: b061276b1_sl.dgn
SCALE: As Shown

BRIDGE NO. B7282 DRAWING NO. 53621

DATE REVISED	DATE FILMED	DATE REVISED	DATE FILMED

FED. ROAD DIST. NO.	STATE	FED. AID PROJ. NO.	SHEET NO.	TOTAL SHEETS
6	ARK.			
JOB NO.		061276	218	438
(1) B7282		SPAN DETAILS		53622

(F) C.L. Full Depth Parapet Joint (¼" to 1" max.). Stop 4" from top of slab.

(P) C.L. Partial Depth Parapet Joint (¼" to 1" max.). Stop 1'-6" from top of slab.

(A) 6 Spa. @ 6" = 3'-0" S503E s/w S504E-S510E (Top & Bottom)

(B) 19 Spa. @ 6" = 9'-6" S511E-S530E (Top & bottom)

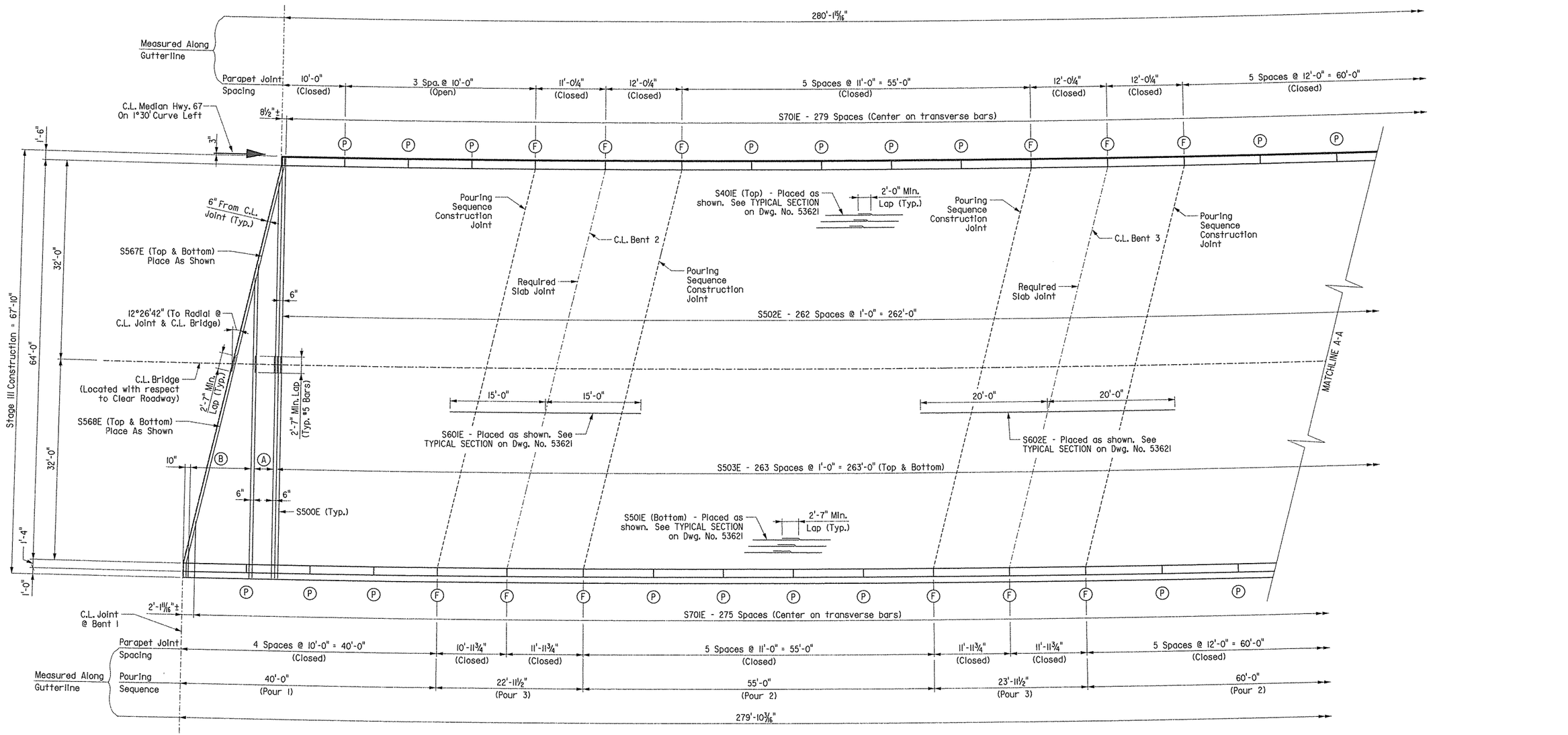

REINFORCING PART PLAN & POURING SEQUENCE

Scale: ⅛" = 1'-0"

Note: See TYPICAL SECTION on Dwg. No. 53621 for placement of longitudinal reinforcing.

Note: For Bar List, see Dwg. No. 53610.

Note: All transverse reinforcing steel shall be placed on radial lines. Spacing is measured along C.L. Bridge, unless noted otherwise.

Note: All longitudinal lines and longitudinal reinforcing steel shall be placed on curves concentric with C.L. Median.

Note: For parapet details, see Dwg. Nos. 53607-53609.

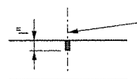

SLAB JOINT DETAIL

No Scale

1/2 " X 1" Type 3 or 4 Joint Sealer. See Subsection 501.02 (h) and 501.05 (j). Backer rod filler will not be required. Joint Sealer shall be measured and paid for as Class S(AE) Concrete-Bridge. Slab joints shall extend to the outside edge of the deck slab. Slab joints shall be installed before the parapet railing is poured. If slab joints are to be sawed, they shall be sawed as soon as the concrete has sufficiently set up to allow the sawing of joint without damage to the slab. Slab joints shall be placed at all Pouring Sequence Construction Joints and Required Slab Joint locations. The joint sealer shall extend across the deck slab (gutterline to gutterline). Slab joints shall align with parapet open joints.

STATE OF ARKANSAS
REGISTERED PROFESSIONAL ENGINEER
No. 11339
3-24-14
LARRY W. MILLER
BRIDGE ENGINEER

BRIDGE B
SHEET 2 OF 5
DETAILS OF 280'-0" CONTINUOUS COMPOSITE W-BEAM UNIT
REDMOND ROAD

ROUTE 67 SEC. 10

ARKANSAS STATE HIGHWAY COMMISSION

LITTLE ROCK, ARK.

DRAWN BY: DLM DATE: 2-13 FILENAME: b061276bl_s2.dgn

CHECKED BY: GS DATE: 03-01-13 SCALE: As Shown

DESIGNED BY: DLM DATE: 2-13

BRIDGE NO. B7282 DRAWING NO. 53622

DATE REVISED	DATE FILMED	DATE REVISED	DATE FILMED	FED. ROAD DIST. NO.	STATE	FED. AID PROJ. NO.	SHEET NO.	TOTAL SHEETS
				6	ARK.			
				JOB NO.		061276	219	438
				(1) B7282		SPAN DETAILS		53623

(F) C.L. Full Depth Parapet Joint (¼" to 1" max.). Stop 4" from top of slab.

(P) C.L. Partial Depth Parapet Joint (¼" to 1" max.). Stop 1'-6" from top of slab.

(C) 7 Spa. @ 6" = 3'-6"
S503 s/w S531E-S538E
(Top & Bottom)

(D) 27 Spa. @ 6" = 13'-6"
S539E-S566E (Top & bottom)

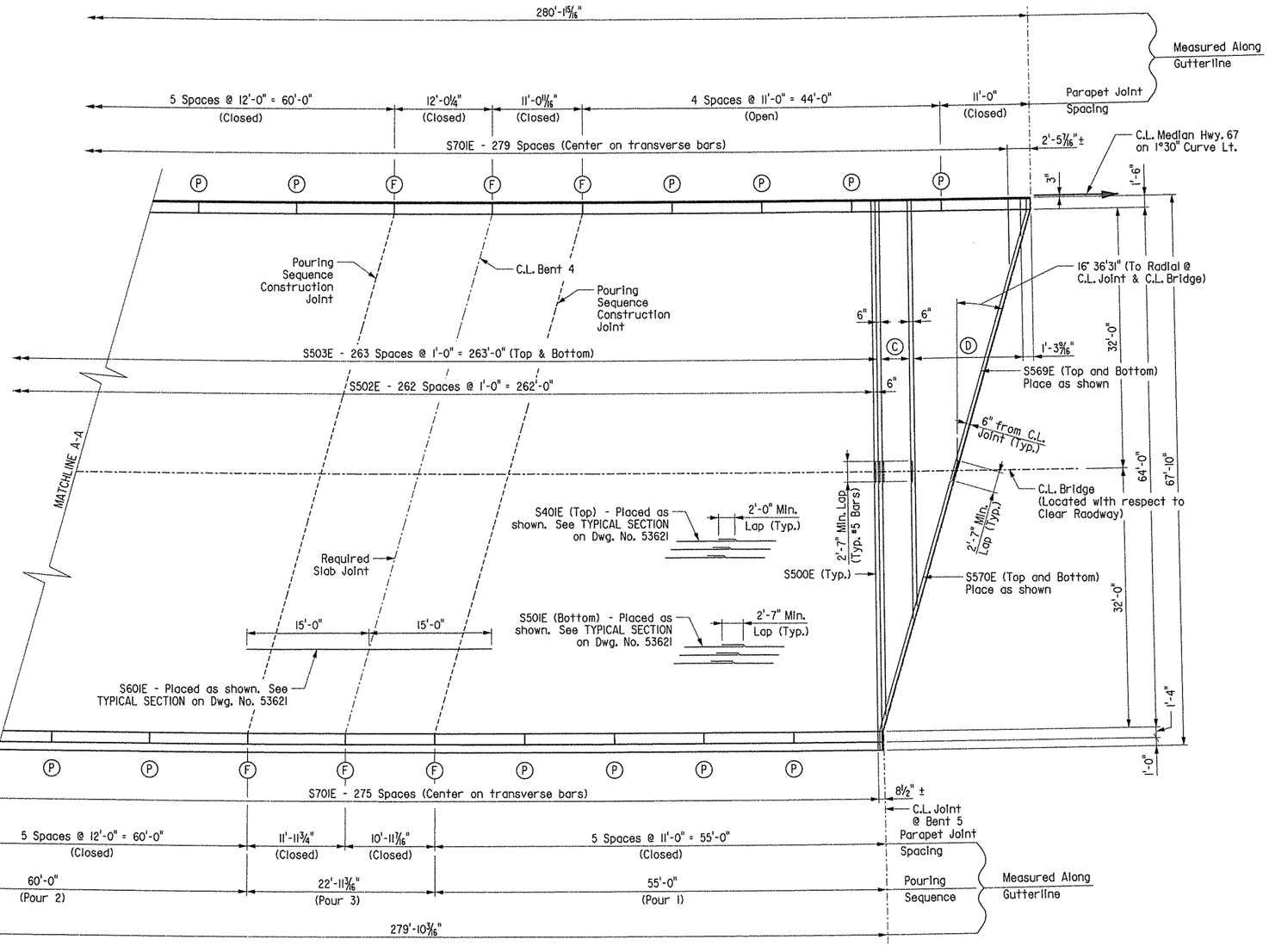

REINFORCING PART PLAN & POURING SEQUENCE

Scale: ⅛" = 1'-0"

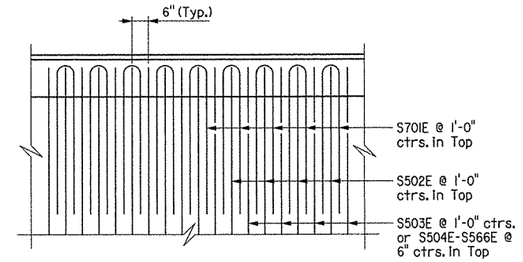

DETAIL A

No Scale

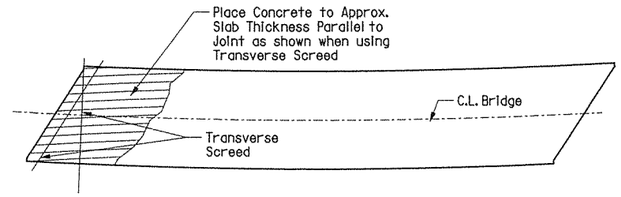

Note: At the Contractor's option, the Transverse Screed may be placed parallel to the skew or perpendicular to C.L. Bridge

CONCRETE PLACEMENT PROCEDURE

No Scale

Note: Pours with the same number may be placed simultaneously or separately. All Pours (1) must be placed before Pours (2) can be placed and Pours (2) before Pours (3). 48 hours shall elapse before the end of a pour and the start of the next pour. 72 hours shall elapse between the end of a pour and the start of an adjacent pour.
72 hours shall elapse between the completion of the entire deck and the pouring of the parapet. Any railing pours made before the entire slab unit has been placed must be approved by the Engineer.

The Contractor must obtain approval from the Engineer for any deviations from the pouring sequence shown.

Concrete in bridge superstructure shall be consolidated for the entire pour before any concrete has taken its initial set. This may require the use of a retarding agent.

Note: Required slab joints and pouring sequence construction joints shall align with parapet open joint at the gutterline.

Note: See TYPICAL SECTION on Dwg. No. 53621 for placement of longitudinal reinforcing.

Note: For Bar List, see Dwg. No. 53610.

Note: All transverse reinforcing steel shall be placed on radial lines. Spacing is measured along C.L. Bridge, unless noted otherwise.

Note: All longitudinal lines and longitudinal reinforcing steel shall be placed on curves concentric with C.L. Median.

Note: For Parapet details, see Dwg. Nos. 53607-53609.

STATE OF ARKANSAS
REGISTERED PROFESSIONAL ENGINEER
No. 11339
LARRY W. MILLER
8-19-13
BRIDGE ENGINEER

BRIDGE B
SHEET 3 OF 5
DETAILS OF 280'-0" CONTINUOUS COMPOSITE W-BEAM UNIT
REDMOND ROAD

ROUTE 67 SEC. 10

ARKANSAS STATE HIGHWAY COMMISSION

LITTLE ROCK, ARK.

DRAWN BY: DLM DATE: 2-13
CHECKED BY: GS DATE: 03-01-13
DESIGNED BY: DLM DATE: 2-13
FILENAME: b061276bl_s3.dgn
SCALE: As Shown

BRIDGE NO. B7282 DRAWING NO. 53623

DATE REVISED	DATE FILMED	DATE REVISED	DATE FILMED	FED. ROAD DIST. NO.	STATE	FED. AID PROJ. NO.	SHEET NO.	TOTAL SHEETS
				6	ARK.			
				JOB NO.		061276	220	438
				(1) B7282		SPAN DETAILS		53624

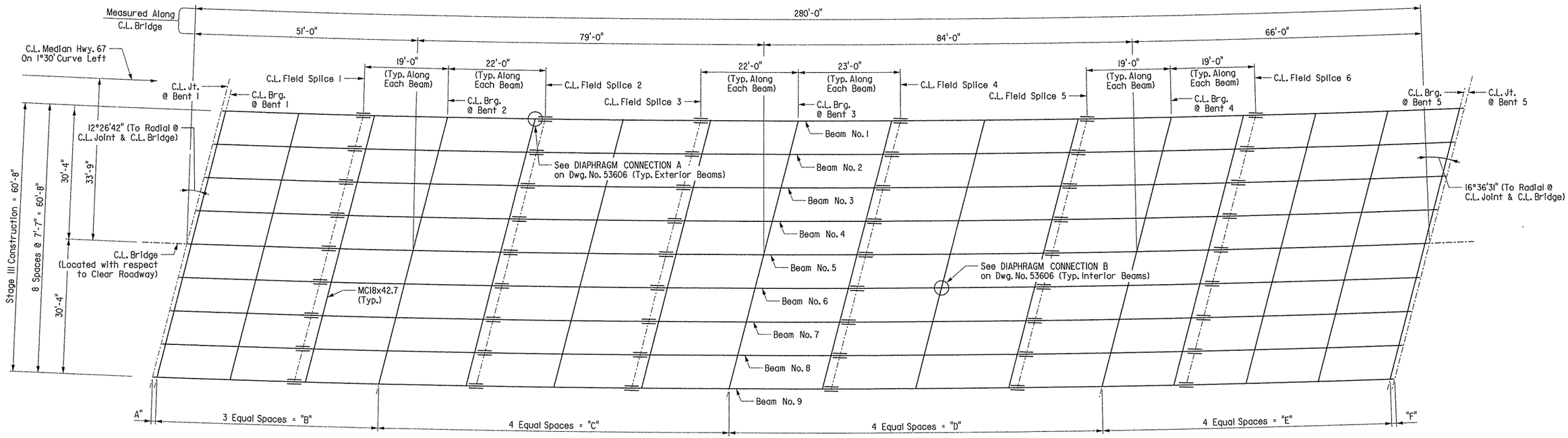

FRAMING PLAN

Not To Scale

TABLE OF VARIABLES

Beam No.	1	2	3	4	5	6	7	8	9
"A"	1'-0 5/16"	1'-0 5/16"	1'-0 5/16"	1'-0 5/16"	1'-0 5/16"	1'-0 5/16"	1'-0 5/16"	1'-0 5/16"	1'-0 5/16"
"B"	49'-11 5/16"	49'-11 7/8"	49'-11 13/16"	49'-11 3/4"	49'-11 11/16"	49'-11 5/8"	49'-11 9/16"	49'-11 1/2"	49'-11 7/16"
"C"	79'-0 7/16"	79'-0 5/16"	79'-0 1/4"	79'-0 1/8"	79'-0"	78'-11 7/8"	78'-11 3/4"	78'-11 11/16"	78'-11 9/16"
"D"	84'-0 9/16"	84'-0 7/16"	84'-0 5/16"	84'-0 1/8"	84'-0"	83'-11 7/8"	83'-11 11/16"	83'-11 9/16"	83'-11 7/16"
"E"	65'-0 1/16"	64'-11 15/16"	64'-11 13/16"	64'-11 11/16"	64'-11 9/16"	64'-11 7/16"	64'-11 5/16"	64'-11 3/16"	64'-11 1/8"
"F"	1'-0 1/2"	1'-0 1/2"	1'-0 1/2"	1'-0 1/2"	1'-0 1/2"	1'-0 1/2"	1'-0 1/2"	1'-0 1/2"	1'-0 1/2"
"G"	0'-1 5/16"	0'-1 5/16"	0'-1 5/16"	0'-1 5/16"	0'-1 5/16"	0'-1 5/16"	0'-1 5/16"	0'-1 5/16"	0'-1 5/16"
"H"	1'-1 5/16"	1'-1 5/16"	1'-1 5/16"	1'-1 5/16"	1'-1 5/16"	1'-1 5/16"	1'-1 5/16"	1'-1 5/16"	1'-1 5/16"
"J"	0'-1 11/16"	0'-1 11/16"	0'-1 11/16"	0'-1 11/16"	0'-1 11/16"	0'-1 3/4"	0'-1 3/4"	0'-1 3/4"	0'-1 11/16"
"K"	1'-1 9/16"	1'-1 9/16"	1'-1 9/16"	1'-1 9/16"	1'-1 9/16"	1'-1 9/16"	1'-1 9/16"	1'-1 9/16"	1'-1 9/16"

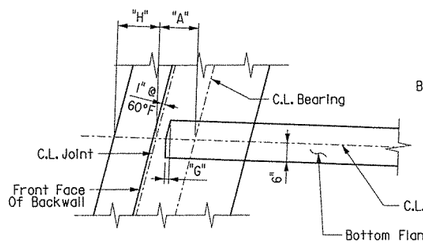

BEARING PLAN @ END BENT 1

Scale: ½" = 1'-0"

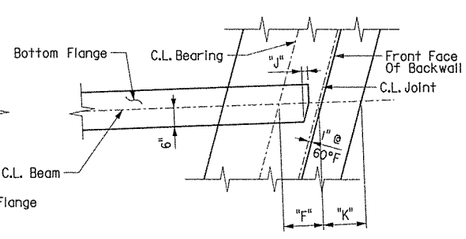

BEARING PLAN @ END BENT 4

Scale: ½" = 1'-0"

STATE OF ARKANSAS
REGISTERED PROFESSIONAL ENGINEER
No. 11339
LARRY W. MILLER
8-19-13

BRIDGE ENGINEER

NOTES:

All longitudinal dimensions are taken along C.L. Beam, U.N.O.

Beams are curved and concentric to C.L. Median. All Diaphragms are parallel to bents, U.N.O.

For BEAM ELEVATION, see Dwg. No. 53605.

For FIELD SPLICE DETAILS, see Dwg. No. 53605.

For DIAPHRAGM DETAILS, see Dwg. No. 53606.

BRIDGE B
SHEET 4 OF 5
DETAILS OF 280'-0" CONTINUOUS COMPOSITE W-BEAM UNIT
REDMOND ROAD

ROUTE 67 SEC. 10

ARKANSAS STATE HIGHWAY COMMISSION

LITTLE ROCK, ARK.

DRAWN BY: DLM DATE: 2-13
CHECKED BY: GS DATE: 03-01-13
DESIGNED BY: DLM DATE: 2-13

FILENAME: b061276bl_s4.dgn
SCALE: As Shown

BRIDGE NO. B7282 DRAWING NO. 53624

DATE REVISED	DATE FILMED	DATE REVISED	DATE FILMED	FED. ROAD DIST. NO.	STATE	FED. AID PROJ. NO.	SHEET NO.	TOTAL SHEETS
				6	ARK.			
				JOB NO.		061276	221	438
				(1) B7282		SPAN DETAILS		53625

TABLE OF DEAD LOAD DEFLECTIONS (INCHES)

Camber for Dead Load Deflection plus vertical curve +/- ¼" tolerance. Vertical curve corrections not included. Negative sign (-) indicates upward deflection. Deflections shown are along the centerline beam from the plane perpendicular to the web extending from centerline bearing to centerline bearing.

	POINT OF DEFLECTION	Structural Steel									Structural Steel (+) Slab									Structural Steel (+) Slab (+) Parapet Rail								
		Beam 1	Beam 2	Beam 3	Beam 4	Beam 5	Beam 6	Beam 7	Beam 8	Beam 9	Beam 1	Beam 2	Beam 3	Beam 4	Beam 5	Beam 6	Beam 7	Beam 8	Beam 9	Beam 1	Beam 2	Beam 3	Beam 4	Beam 5	Beam 6	Beam 7	Beam 8	Beam 9
SPAN NO. 1	1.00	0.000	0.000	0.000	0.000	0.000	0.000	0.000	0.000	0.000	0.000	0.000	0.000	0.000	0.000	0.000	0.000	0.000	0.000	0.000	0.000	0.000	0.000	0.000	0.000	0.000	0.000	0.000
	1.10	0.010	0.010	0.010	0.010	0.010	0.010	0.010	0.010	0.010	0.062	0.062	0.063	0.062	0.062	0.061	0.061	0.070	0.076	0.065	0.065	0.066	0.065	0.065	0.064	0.067	0.073	0.079
	1.20	0.017	0.017	0.017	0.017	0.017	0.017	0.017	0.017	0.016	0.106	0.106	0.109	0.108	0.106	0.106	0.105	0.122	0.130	0.111	0.111	0.114	0.113	0.111	0.111	0.115	0.127	0.135
	1.30	0.022	0.022	0.022	0.022	0.022	0.022	0.022	0.022	0.021	0.136	0.136	0.138	0.137	0.136	0.135	0.134	0.156	0.166	0.142	0.142	0.144	0.143	0.142	0.141	0.147	0.162	0.172
	1.40	0.023	0.023	0.023	0.023	0.023	0.023	0.023	0.023	0.022	0.142	0.142	0.145	0.144	0.142	0.142	0.141	0.164	0.175	0.148	0.148	0.151	0.150	0.148	0.148	0.154	0.170	0.181
	1.50	0.020	0.020	0.020	0.020	0.020	0.020	0.020	0.020	0.019	0.126	0.126	0.128	0.127	0.125	0.123	0.125	0.144	0.153	0.131	0.131	0.133	0.132	0.130	0.128	0.134	0.149	0.158
	1.60	0.015	0.015	0.015	0.015	0.015	0.015	0.015	0.014	0.014	0.092	0.092	0.094	0.093	0.092	0.090	0.091	0.105	0.112	0.096	0.096	0.098	0.097	0.096	0.094	0.098	0.109	0.116
	1.70	0.007	0.007	0.007	0.007	0.007	0.007	0.007	0.007	0.006	0.045	0.045	0.046	0.046	0.044	0.043	0.045	0.052	0.054	0.047	0.047	0.048	0.048	0.046	0.045	0.047	0.054	0.056
	1.80	0.000	0.000	0.000	0.000	0.000	0.000	0.000	0.000	0.000	0.004	0.004	0.004	0.004	0.003	0.002	0.005	0.004	0.004	0.004	0.004	0.004	0.004	0.003	0.002	0.002	0.004	0.004
	1.90	-0.003	-0.003	-0.003	-0.003	-0.003	-0.003	-0.003	-0.003	-0.003	-0.016	-0.016	-0.016	-0.016	-0.017	-0.017	-0.015	-0.018	-0.019	-0.017	-0.017	-0.017	-0.017	-0.018	-0.018	-0.019	-0.019	-0.020
SPAN NO. 2	2.00	0.000	0.000	0.000	0.000	0.000	0.000	0.000	0.000	0.000	0.000	0.000	0.000	0.000	0.000	0.000	0.000	0.000	0.000	0.000	0.000	0.000	0.000	0.000	0.000	0.000	0.000	0.000
	2.10	0.024	0.024	0.024	0.024	0.024	0.024	0.024	0.024	0.024	0.142	0.142	0.143	0.144	0.144	0.146	0.139	0.164	0.176	0.149	0.149	0.150	0.151	0.151	0.153	0.160	0.171	0.183
	2.20	0.059	0.059	0.059	0.060	0.060	0.059	0.059	0.059	0.058	0.348	0.348	0.354	0.355	0.355	0.358	0.341	0.403	0.430	0.364	0.364	0.370	0.371	0.371	0.374	0.390	0.419	0.446
	2.30	0.092	0.092	0.093	0.094	0.094	0.094	0.093	0.092	0.091	0.547	0.547	0.557	0.558	0.558	0.564	0.537	0.632	0.676	0.573	0.573	0.583	0.584	0.584	0.589	0.613	0.657	0.701
	2.40	0.114	0.114	0.115	0.116	0.115	0.115	0.115	0.114	0.112	0.672	0.672	0.684	0.686	0.684	0.692	0.659	0.777	0.830	0.704	0.704	0.715	0.717	0.715	0.723	0.754	0.808	0.861
	2.50	0.117	0.117	0.119	0.119	0.119	0.119	0.119	0.117	0.115	0.690	0.690	0.704	0.705	0.704	0.711	0.676	0.797	0.852	0.723	0.723	0.736	0.737	0.736	0.743	0.775	0.829	0.884
	2.60	0.103	0.103	0.105	0.105	0.105	0.105	0.104	0.103	0.101	0.605	0.605	0.616	0.618	0.617	0.624	0.592	0.698	0.747	0.634	0.634	0.645	0.647	0.646	0.653	0.678	0.726	0.776
	2.70	0.076	0.076	0.077	0.077	0.077	0.077	0.077	0.076	0.074	0.442	0.442	0.451	0.452	0.452	0.456	0.432	0.511	0.545	0.463	0.463	0.472	0.473	0.473	0.477	0.495	0.532	0.566
	2.80	0.042	0.042	0.043	0.043	0.043	0.043	0.043	0.043	0.042	0.245	0.245	0.250	0.251	0.251	0.253	0.239	0.284	0.303	0.257	0.257	0.262	0.263	0.263	0.265	0.275	0.296	0.315
	2.90	0.013	0.013	0.013	0.013	0.013	0.013	0.013	0.013	0.013	0.077	0.077	0.078	0.078	0.078	0.079	0.075	0.088	0.095	0.081	0.081	0.082	0.082	0.082	0.083	0.086	0.092	0.099
	3.00	0.000	0.000	0.000	0.000	0.000	0.000	0.000	0.000	0.000	0.000	0.000	0.000	0.000	0.000	0.000	0.000	0.000	0.000	0.000	0.000	0.000	0.000	0.000	0.000	0.000	0.000	0.000
SPAN NO. 3	3.10	0.015	0.015	0.015	0.015	0.015	0.015	0.015	0.014	0.014	0.078	0.078	0.079	0.079	0.078	0.079	0.074	0.089	0.095	0.082	0.082	0.083	0.083	0.082	0.083	0.087	0.093	0.099
	3.20	0.047	0.047	0.047	0.047	0.047	0.047	0.047	0.047	0.046	0.255	0.255	0.260	0.259	0.258	0.261	0.246	0.294	0.314	0.268	0.268	0.273	0.272	0.271	0.274	0.285	0.307	0.327
	3.30	0.085	0.085	0.085	0.086	0.086	0.085	0.085	0.085	0.083	0.468	0.468	0.475	0.476	0.475	0.478	0.452	0.539	0.575	0.492	0.492	0.499	0.500	0.499	0.502	0.523	0.563	0.599
	3.40	0.115	0.115	0.116	0.116	0.116	0.116	0.116	0.115	0.113	0.640	0.640	0.651	0.651	0.649	0.655	0.619	0.737	0.787	0.672	0.672	0.683	0.683	0.681	0.687	0.716	0.769	0.819
	3.50	0.127	0.127	0.129	0.129	0.129	0.128	0.128	0.127	0.125	0.709	0.709	0.723	0.723	0.721	0.727	0.687	0.817	0.875	0.745	0.745	0.758	0.758	0.756	0.762	0.794	0.852	0.910
	3.60	0.119	0.119	0.120	0.120	0.120	0.120	0.120	0.119	0.117	0.660	0.660	0.672	0.672	0.670	0.677	0.638	0.761	0.814	0.693	0.693	0.705	0.705	0.703	0.710	0.739	0.794	0.847
	3.70	0.092	0.092	0.093	0.093	0.093	0.093	0.093	0.093	0.091	0.508	0.508	0.518	0.518	0.517	0.521	0.491	0.588	0.629	0.534	0.534	0.543	0.543	0.542	0.546	0.569	0.613	0.655
	3.80	0.055	0.055	0.056	0.056	0.055	0.055	0.055	0.055	0.055	0.298	0.298	0.304	0.304	0.302	0.305	0.287	0.344	0.370	0.313	0.313	0.319	0.319	0.317	0.320	0.333	0.359	0.385
	3.90	0.019	0.019	0.019	0.019	0.019	0.019	0.019	0.019	0.019	0.100	0.100	0.102	0.102	0.101	0.102	0.096	0.116	0.125	0.105	0.105	0.107	0.107	0.106	0.107	0.111	0.121	0.130
	4.00	0.000	0.000	0.000	0.000	0.000	0.000	0.000	0.000	0.000	0.000	0.000	0.000	0.000	0.000	0.000	0.000	0.000	0.000	0.000	0.000	0.000	0.000	0.000	0.000	0.000	0.000	0.000
SPAN NO. 4	4.10	0.006	0.006	0.006	0.006	0.006	0.006	0.006	0.006	0.005	0.042	0.042	0.042	0.042	0.042	0.042	0.042	0.048	0.049	0.044	0.044	0.044	0.044	0.044	0.044	0.046	0.050	0.051
	4.20	0.024	0.024	0.024	0.025	0.025	0.024	0.024	0.024	0.023	0.152	0.152	0.154	0.155	0.155	0.155	0.151	0.175	0.184	0.159	0.159	0.161	0.162	0.162	0.162	0.169	0.182	0.191
	4.30	0.048	0.048	0.049	0.049	0.049	0.049	0.048	0.047	0.046	0.296	0.296	0.302	0.302	0.302	0.305	0.293	0.340	0.360	0.310	0.310	0.316	0.316	0.316	0.319	0.331	0.354	0.373
	4.40	0.071	0.071	0.072	0.072	0.072	0.072	0.072	0.070	0.068	0.435	0.435	0.443	0.443	0.442	0.447	0.429	0.500	0.530	0.455	0.455	0.463	0.463	0.462	0.467	0.487	0.520	0.550
	4.50	0.087	0.087	0.088	0.089	0.089	0.088	0.088	0.086	0.084	0.531	0.531	0.541	0.542	0.542	0.546	0.524	0.610	0.649	0.556	0.556	0.565	0.566	0.566	0.570	0.593	0.634	0.673
	4.60	0.092	0.092	0.093	0.094	0.094	0.093	0.093	0.091	0.089	0.560	0.560	0.569	0.572	0.570	0.575	0.552	0.643	0.685	0.586	0.586	0.595	0.598	0.596	0.601	0.626	0.668	0.710
	4.70	0.084	0.084	0.086	0.086	0.086	0.086	0.085	0.084	0.082	0.514	0.514	0.525	0.526	0.525	0.530	0.507	0.592	0.630	0.538	0.538	0.549	0.550	0.549	0.554	0.574	0.615	0.653
	4.80	0.065	0.065	0.066	0.067	0.067	0.066	0.066	0.065	0.063	0.396	0.396	0.404	0.406	0.405	0.408	0.390	0.456	0.486	0.414	0.414	0.422	0.424	0.423	0.426	0.443	0.474	0.504
	4.90	0.035	0.035	0.036	0.036	0.036	0.036	0.036	0.035	0.035	0.216	0.216	0.221	0.221	0.221	0.222	0.213	0.249	0.266	0.226	0.226	0.231	0.231	0.231	0.232	0.242	0.259	0.276
	5.00	0.000	0.000	0.000	0.000	0.000	0.000	0.000	0.000	0.000	0.000	0.000	0.000	0.000	0.000	0.000	0.000	0.000	0.000	0.000	0.000	0.000	0.000	0.000	0.000	0.000	0.000	0.000

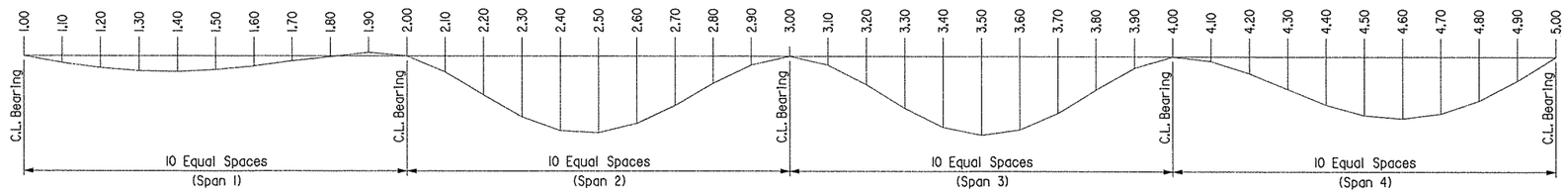

DEAD LOAD DEFLECTION DIAGRAM

Not to Scale

STATE OF ARKANSAS
Larry W. Miller
REGISTERED PROFESSIONAL ENGINEER
No. 11339
8-19-13
LARRY W. MILLER
BRIDGE ENGINEER

BRIDGE B
SHEET 5 OF 5
DETAILS OF 280'-0" CONTINUOUS COMPOSITE W-BEAM UNIT
REDMOND ROAD

ROUTE 67 SEC. 10

ARKANSAS STATE HIGHWAY COMMISSION

LITTLE ROCK, ARK.

DRAWN BY: BEG DATE: 1-13
CHECKED BY: GS DATE: 03-01-13
DESIGNED BY: BEG DATE: 1-13
FILENAME: b061276bl_s5.dgn
SCALE: As Shown

BRIDGE NO. B7282 DRAWING NO. 53625

DATE REVISED	DATE FILMED	DATE REVISED	DATE FILMED	FED. ROAD DIST. NO.	STATE	FED. AID PROJ. NO.	SHEET NO.	TOTAL SHEETS
				6	ARK.			
				JOB NO.		061276	222	438
				(1) A&B7282		JOINT DETAILS		53626

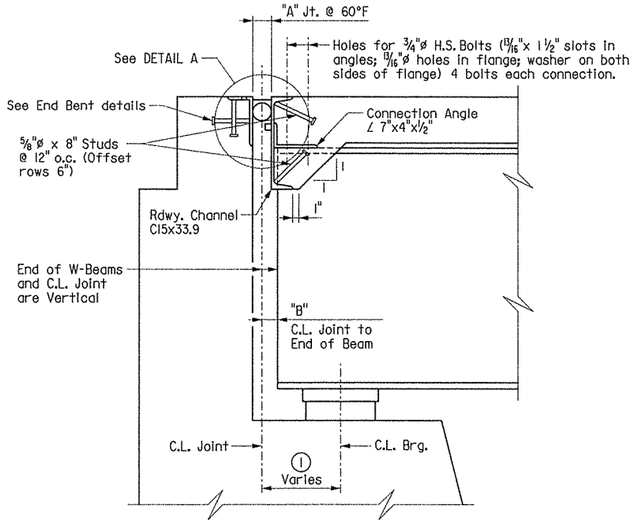

(1) Measured Along C.L. Beam. See TABLE OF BEAM VARIABLES on Dwg. No. 53605.

SECTION THRU JOINT AT END BENTS

Scale: 1" = 1'-0"
Note: Sections thru Joints are taken normal to C.L. Joints

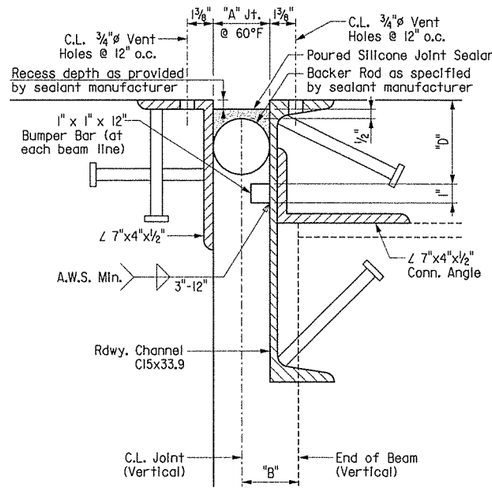

NOTE: Concrete shall be hand packed under the joint armor. Care shall be taken to ensure that concrete completely fills the areas below the top channel flange.

DETAIL A

Scale: 3" = 1'-0"

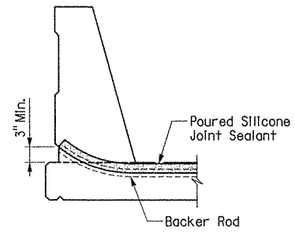

JOINT SEAL PLACEMENT AT CURB

Scale: ¾" = 1'-0"

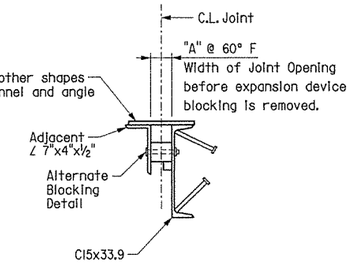

DETAILS FOR BLOCKING EXPANSION JOINT DEVICE

NOTE:
Each expansion joint device shall be blocked in the Shop by the Fabricator to the dimension shown, and the blocking details shall be shown on the Shop Drawings. Blocking shall be placed within 2 feet of each end of the device and with a maximum spacing of 8 feet.

EXPANSION DEVICE INSTALLATION AT END BENTS:

The contractor may elect to install the expansion device using one of the following two alternatives:

1) The concrete span pour adjacent to joint shall be placed before the end bent backwall is placed. After the end bent backwall forms are in place and the beams erected, the blocked expansion device shall be installed and adjusted for grade. All connection bolts shall be fully tightened prior to placing the deck concrete adjacent to the bent. Immediately prior to pouring the backwall concrete, the blocking shall be removed, the opening adjusted for temperature, and the backwall constructed.

2) The backwall shall be poured to the optional construction joint after beams are erected. The blocked expansion device shall be installed and adjusted for grade. All connection bolts shall be fully tightened prior to placing the deck concrete adjacent to the bent. Immediately prior to pouring the remainder of the backwall concrete, the blocking shall be removed and the opening adjusted for temperature. Backfill shall not be placed behind the backwall until the deck concrete on the adjacent span has been placed.

SILICONE JOINT DATA

Bent Number	"A" Width Perpendicular to Joint at 24 Hour Average Temperature ** of:			"B" Perpendicular to Joint at 60°F	Bumper Plate Size	"D"
	40° F	60° F	80° F			
1 & 5	2 15/16"	2½"	2 3/16"	2½"±	1" x 1¼"	5"

** The temperature used to set the joint opening shall be the approximate average air temperature during the 24 hour period immediately before the bolts are tightened. The Engineer shall establish the temperature. Interpolation of the table may be necessary.

NOTES:
The temperature limitations recommended by the sealant manufacturer shall be observed.

The sealant shall be installed only when the average 24 hour air temperature is between 40°F and 80°F.

BACKER ROD NOTE:
Use an appropriately sized backer rod at the depth shown in the manufacturer's literature based on the joint width at the time of sealing.

Except as noted, do not install more backer rod than can be sealed in the same day.

The contractor shall verify separation of the backer rod from the joint material after the joint material has set.

STATE OF ARKANSAS
REGISTERED PROFESSIONAL ENGINEER
No. 11339
LARRY W. MILLER
8-19-13

BRIDGE ENGINEER

DETAILS OF ARMORED JOINT WITH POURED SILICONE JOINT REDMOND ROAD

ROUTE 67 SEC. 10

ARKANSAS STATE HIGHWAY COMMISSION

LITTLE ROCK, ARK.

DRAWN BY: BEG DATE: 2-13 FILENAME: b061276ml_jl.dgn
CHECKED BY: GS DATE: 03-01-13 SCALE: As Shown
DESIGNED BY: BEG DATE: 2-13

BRIDGE NO. A&B7282 DRAWING NO. 53626

DATE REVISED	DATE FILMED	DATE REVISED	DATE FILMED	FED. ROAD DIST. NO.	STATE	FED. AID PROJ. NO.	SHEET NO.	TOTAL SHEETS
				6	ARK.			
				JOB NO.		061276	223	438
				(1) A&B7282		ELASTO. BEARINGS		53627

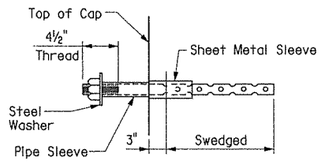

ANCHOR BOLT DETAIL

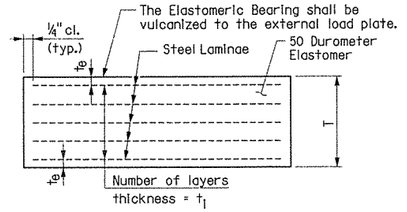

t_e = thickness of elastomer cover on top and bottom of pad

t_l = thickness of elastomer between steel laminae

N = number of elastomer layers of thickness t_l

ELASTOMERIC BEARING

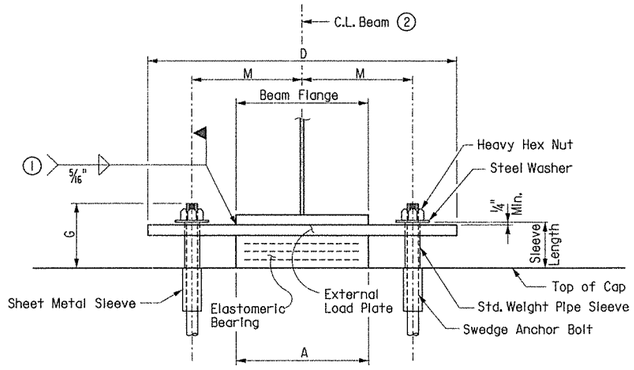

FRONT VIEW @ BENT NOS. 1 thru 5

(1) Care shall be taken to ensure that the external load plate is in full and complete contact with the beam or girder flange before welding begins.

(2) C.L. Bearing shall align with C.L. Beam

Note: The direction of bevel of the external load plate may not be accurately depicted with respect to the Ta and Tb values shown in the Table of Fabricator Variables.

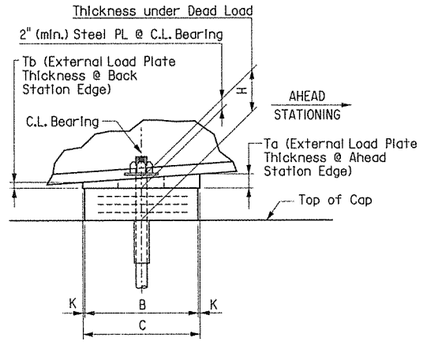

SIDE VIEW @ BENT NOS. 1 thru 5

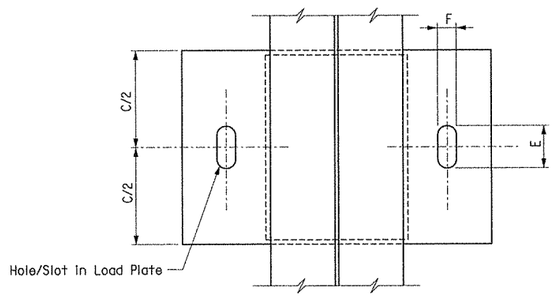

PLAN VIEW @ BENT NOS. 1 thru 5

NOTE:
Anchor Bolts may be cast in place or drilled and grouted into place. If Anchor Bolts are to be cast in place, the Galvanized Sheet Metal Sleeves will not be required. If Anchor Bolts are to be drilled and grouted in place, the Galvanized Sheet Metal Sleeves shall be cast in place as shown. Sleeves shall be dry packed with styrofoam, urethane foam, or approved equal prior to pouring of concrete. After pouring of the cap and prior to erection of Structural Steel, the dry pack shall be removed and holes for the anchor bolts shall be accurately drilled into the masonry. Bolts placed in drilled holes shall be accurately set and fixed using a QPL approved epoxy or non-shrink grout that completely fills the holes. Galvanized Sheet Metal Sleeves will not be paid for directly, but will be considered subsidary to the item "STRUCTURAL STEEL IN BEAM SPANS, (M 270, Gr. 50)".

GENERAL NOTES

Elastomeric Bearings shall conform to Section 808 of the Standard Specifications and shall be paid for at the unit price bid for "ELASTOMERIC BEARINGS." Bearings shall be seated in accordance with Subsection 808.08. Long-term duration testing of random lot samples specified in Subsection 808.05 is not required. See Special Provision Job 061276 "ELASTOMERIC BEARINGS".

External load plates shall conform to AASHTO M 270, Grade 50. Pipe sleeves shall be ASTM A 53, Grade B, and shall be galvanized to conform to AASHTO M 232, Class C or ASTM B695, Class 50. External load plates shall be completely fabricated (including bevel and bolt holes) and shall be cleaned before vulcanizing to the elastomeric bearing. The surface in contact with the elastomeric bearing shall be cleaned in accordance with subsection 808.03. Other surfaces shall be blast cleaned in accordance with subsection 807.84(b) for painted steel.

Anchor Bolts, Washers, and Nuts shall conform to subsection 807.07 of the Standard Specifications. The anchor bolt grade of steel shall be as specified in the "TABLE OF FABRICATOR VARIABLES". Indentations shall be circular with rounded bottoms and staggered as shown in the details.

Pipe Sleeves, Anchor Bolts, Washers, and Nuts shall be paid for at the unit price bid for "STRUCTURAL STEEL IN BEAM SPANS (M 270, Gr. 50)".

Unless otherwise approved by the Engineer, welding of the external load plate at expansion bearings to the beam will be allowed only when 1) the approximate average air temperature during the 24 hour period immediately preceding welding is between 40°F and 80°F; and 2) the slots in the external load plate are positioned to center on the anchor bolts; and 3) no horizontal deformation of the elastomeric pad is evident. If welding at other temperatures is required, the Engineer will provide adjustment data.

External load plates shall be painted in accordance with Section 807.75. The color of the paint shall be Aluminum and shall match Fed. Std. 595B, Color Chip No. 37200. Mask areas that are to be welded in the field.

TABLE OF FABRICATOR VARIABLES

* Maximum Design Load = Service I Limit State

BRIDGE NO.	LOCATION: BENT NO(S).	LINE ID	BEAM OR GIRDER NO.	BEARING TYPE	NO. of BEARINGS EACH BENT	*MAXIMUM DESIGN LOAD (KIPS)	ELASTOMERIC PAD: G	H	A	B	N	t_l	t_e	NO. & THICKNESS OF STEEL LAMINAE	EXTERNAL LOAD PLATE: T	C	D	E	F	J	K	M	T_a	T_b	ANCHOR BOLT: ANCHOR BOLT (ø x L)	GRADE	PIPE SLEEVE SIZE (ø x L)	SHEET METAL SLEEVE SIZE (ø x L)	STEEL WASHER SIZE (O.D.)
A7282	1	na	All	Exp.	8	74.9	9¼"	6 3/16"	18½"	8½"	6	½"	¼"	7 @ 12 Ga.	4¼"	9½"	29½"	3 5/8"	2 5/8"	na	½"	11¾"	2.05	1.95	1¾" x 28¾"	55	2" x 6½"	4" x 6"	3 3/8"
	2	na	All	Fixed	8	174.6	9"	4 15/16"	17½"	10"	4	½"	¼"	5 @ 12 Ga.	3"	11"	30½"	3¾"	3¾"	na	½"	11¾"	2.04	1.96	2½" x 35½"	55	3" x 5⅜"	4" x 6"	4½"
	3	na	All	Fixed	8	207.7	9½"	4 15/16"	18½"	10½"	4	½"	¼"	5 @ 12 Ga.	3"	11½"	31½"	3¾"	3¾"	na	½"	12¼"	2.01	1.99	2¾" x 39"	55	3" x 5⅜"	5" x 6"	5"
	4	na	All	Fixed	8	200.8	9½"	4 15/16"	18½"	10"	4	½"	¼"	5 @ 12 Ga.	3"	11"	31½"	3¾"	3¾"	na	½"	12¼"	1.98	2.02	2¾" x 39"	55	3" x 5⅜"	5" x 6"	5"
	5	na	All	Exp.	8	87.3	10¼"	6 9/16"	17"	9½"	7	½"	¼"	8 @ 12 Ga.	4 9/16"	10½"	29"	4 7/8"	3⅛"	na	½"	11¼"	1.96	2.04	2" x 31¾"	55	2½" x 7⅛"	4" x 6"	3¾"
B7282	1	na	All	Exp.	9	74.9	9¼"	6 3/16"	18½"	8½"	6	½"	¼"	7 @ 12 Ga.	4¼"	9½"	29½"	3 5/8"	2 5/8"	na	½"	11¾"	2.05	1.95	1¾" x 28¾"	55	2" x 6½"	4" x 6"	3 3/8"
	2	na	All	Fixed	9	174.6	9"	4 15/16"	17½"	10"	4	½"	¼"	5 @ 12 Ga.	3"	11"	30½"	3¾"	3¾"	na	½"	11¾"	2.04	1.96	2½" x 35½"	55	3" x 5⅜"	4" x 6"	4½"
	3	na	All	Fixed	9	207.7	9½"	4 15/16"	18½"	10½"	4	½"	¼"	5 @ 12 Ga.	3"	11½"	31½"	3¾"	3¾"	na	½"	12¼"	2.02	1.98	2¾" x 39"	55	3" x 5⅜"	5" x 6"	5"
	4	na	All	Fixed	9	200.8	9½"	4 15/16"	18½"	10"	4	½"	¼"	5 @ 12 Ga.	3"	11"	31½"	3¾"	3¾"	na	½"	12¼"	1.99	2.01	2¾" x 39"	55	3" x 5⅜"	5" x 6"	5"
	5	na	All	Exp.	9	87.3	10¼"	6 9/16"	17"	9½"	7	½"	¼"	8 @ 12 Ga.	4 9/16"	10½"	29"	4 7/8"	3⅛"	na	½"	11¼"	1.96	2.04	2" x 31¾"	55	2½" x 7⅛"	4" x 6"	3¾"

STATE OF ARKANSAS
Larry W. Miller
REGISTERED PROFESSIONAL ENGINEER
No. 11339
3-20-14
LARRY W. MILLER
BRIDGE ENGINEER

DETAILS OF ELASTOMERIC BEARINGS REDMOND ROAD

ROUTE 67 SEC. 10

ARKANSAS STATE HIGHWAY COMMISSION

LITTLE ROCK, ARK.

DRAWN BY: BEG DATE: 1-13 FILENAME: b061276ml_el.dgn
CHECKED BY: GS DATE: 03-01-13 SCALE: As Shown
DESIGNED BY: BEG DATE: 1-13

BRIDGE NO. A&B7282 DRAWING NO. 53627

DATE REVISED	DATE FILMED	DATE REVISED	DATE FILMED

FED. ROAD DIST. NO.	STATE	FED. AID PROJ. NO.	SHEET NO.	TOTAL SHEETS
6	ARK.			
JOB NO.		061276	224	438
(1) A&B7282	APP. GUTTERS & SLABS			53628

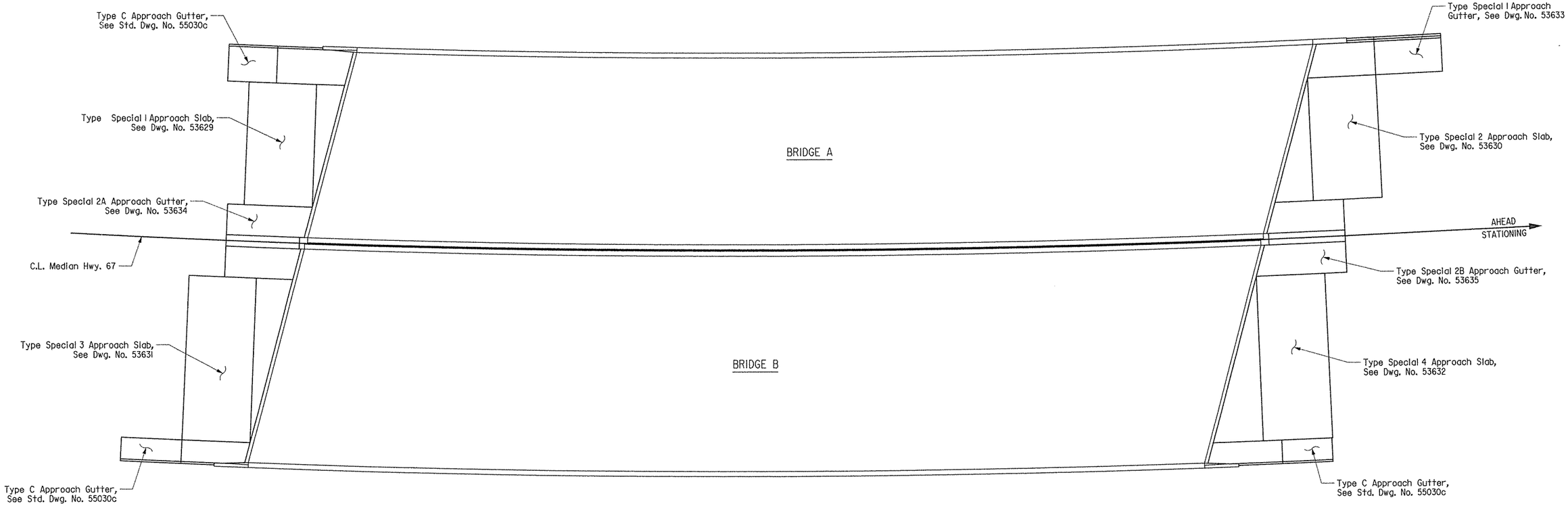

PLAN OF APPROACH GUTTERS AND SLABS

Note: The ½" Preformed Joint (AASHTO M153, Type I) shall be eliminated between concrete faces where dowel bars are used to tie the approach slabs and gutters to the bent components. See Approach Gutter and End Bent details.

STATE OF ARKANSAS
REGISTERED PROFESSIONAL ENGINEER
No. 11339
3-24-14
LARRY W. MILLER
BRIDGE ENGINEER

APPROACH GUTTERS AND APPROACH SLABS LAYOUT REDMOND ROAD

ROUTE 67 SEC. 10

ARKANSAS STATE HIGHWAY COMMISSION

LITTLE ROCK, ARK.

DRAWN BY: JAP DATE: 02-13
CHECKED BY: GS DATE: 03-01-13
DESIGNED BY: LWM DATE: 02-13
FILENAME: b061276ml_asl.dgn
SCALE: No Scale

BRIDGE NO. A&B7282 DRAWING NO. 53628

NOTE: Construct Approach Slab, including longitudinal reinforcing, on concentric arcs to C.L. Hwy. 67.

NOTE: All transverse reinforcing steel shall be placed on radial lines. Spacing is measured along right edge of slab (right is defined by direction of stationing).

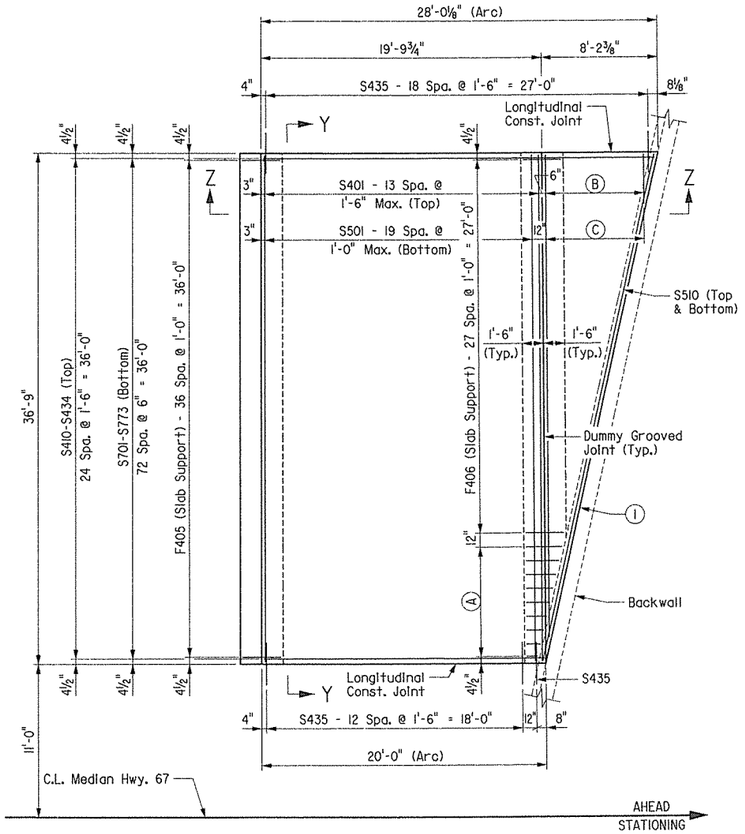

PLAN

Scale: 3/16" = 1'-0"

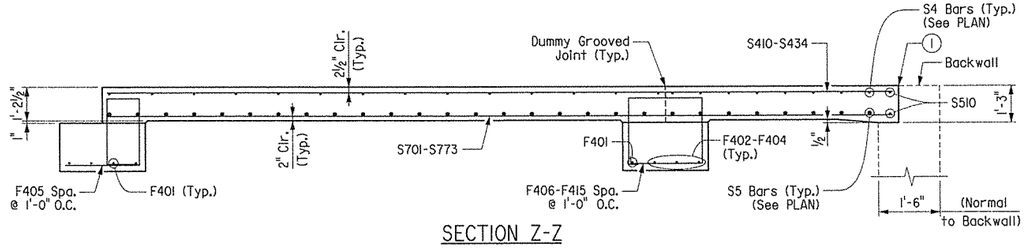

SECTION Z-Z

Scale: 3/8" = 1'-0"

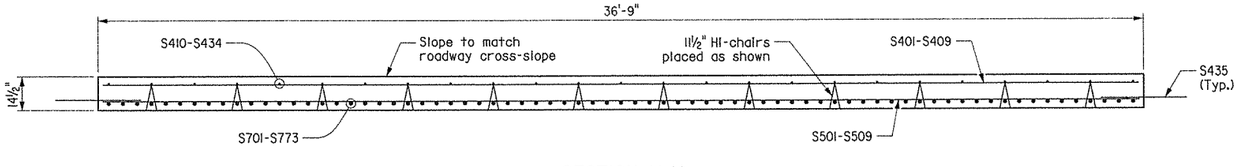

SECTION Y-Y

Scale: 3/8" = 1'-0"

(I) 2" x ¼" Poured Synthetic Polymer Joint Sealer Type 3 or 4 as per Subsection 501.02(h)(2). Backer rod is not required.

(A) F407-F415 (Slab Support) - 8 Spa. @ 1'-0" = 8'-0"

(B) S402-S409 - 7 Spa. @ 1'-0" Max. (Top)

(C) S502-S509 - 7 Spa. @ 1'-0" Max. (Bottom)

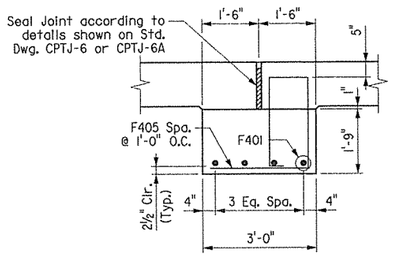

DETAILS OF SUPPORT AT END OF SLAB

Scale: ½" = 1'-0"

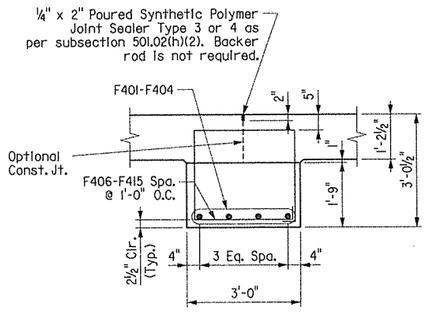

DETAILS OF INTERIOR SUPPORT OF SLAB

Scale: ½" = 1'-0"

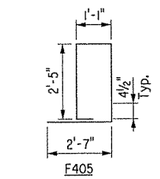

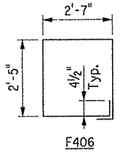

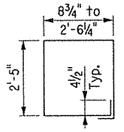

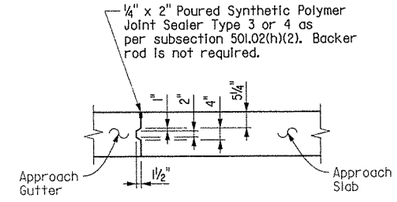

DETAILS OF LONGITUDINAL CONSTRUCTION JOINT

Scale: ½" = 1'-0"

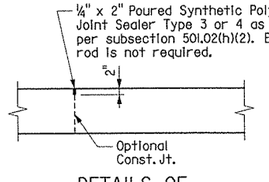

DETAILS OF DUMMY GROOVED JOINT

Scale: ½" = 1'-0"

DATE REVISED	DATE FILMED	DATE REVISED	DATE FILMED

FED. ROAD DIST. NO.	STATE	FED. AID PROJ. NO.	SHEET NO.	TOTAL SHEETS
6	ARK.			
JOB NO.		061276	225	438
(I) A7282		APPROACH SLAB I		53629

BAR LIST - ONE TYPE I SPECIAL APPROACH SLAB

Mark	No. Req'd.	Length	Pin Dia.
F401	5	36'-5"	Str.
F402 to F404	1 Each	35'-3" to 28'-3"	Str.
F405	37	8'-10"	2"
F406	28	10'-4"	2"
F407 to F415	1 Each	10'-3" to 6'-8"	2"
S401	14	36'-5"	Str.
S402 to S409	1 Each	34'-8" to 3'-7"	Str.
S410 to S434	1 Each	27'-7" to 19'-9"	Str.
S435	33	3'-0"	Str.
S501	20	36'-5"	Str.
S502 to S509	1 Each	34'-8" to 3'-7"	Str.
S510	2	37'-4"	Str.
S701 to S773	1 Each	27'-7" to 19'-9"	Str.

QUANTITIES FOR ONE TYPE I SPECIAL APPROACH SLAB

Reinforcing Steel (Lbs.)	Concrete (Cu. Yds.)
6,081	53.84

DETAILS OF TYPE SPECIAL I APPROACH SLABS REDMOND ROAD

ROUTE 67 SEC. 10

ARKANSAS STATE HIGHWAY COMMISSION

LITTLE ROCK, ARK.

STATE OF ARKANSAS LARRY W. MILLER REGISTERED PROFESSIONAL ENGINEER No. 11339 3-24-14

BRIDGE ENGINEER

DRAWN BY: JAP DATE: 03-13 FILENAME: b061276al asl.dgn

CHECKED BY: GS DATE: 03-01-13 SCALE: As Shown

DESIGNED BY: LWM DATE: 03-13

BRIDGE NO. A7282 DRAWING NO. 53629

NOTE: Construct Approach Slab, including longitudinal reinforcing, on concentric arcs to C.L. Hwy. 67.

NOTE: All transverse reinforcing steel shall be placed on radial lines. Spacing is measured along right edge of slab (right is defined by direction of stationing).

(1) 2" x ¼" Poured Synthetic Polymer Joint Sealer Type 3 or 4 as per Subsection 501.02(h)(2). Backer rod is not required.

(A) F407-F413 (Slab Support) - 6 Spa. @ 1'-0" = 6'-0"

(B) S402-S412 - 10 Spa. @ 1'-0" Max. (Top)

(C) S502-S512 - 10 Spa. @ 1'-0" Max. (Bottom)

DATE REVISED	DATE FILMED	DATE REVISED	DATE FILMED	FED. ROAD DIST. NO.	STATE	FED. AID PROJ. NO.	SHEET NO.	TOTAL SHEETS
				6	ARK.			
				JOB NO.		061276	226	438
				(1)	A7282	APPROACH SLAB 2		53630

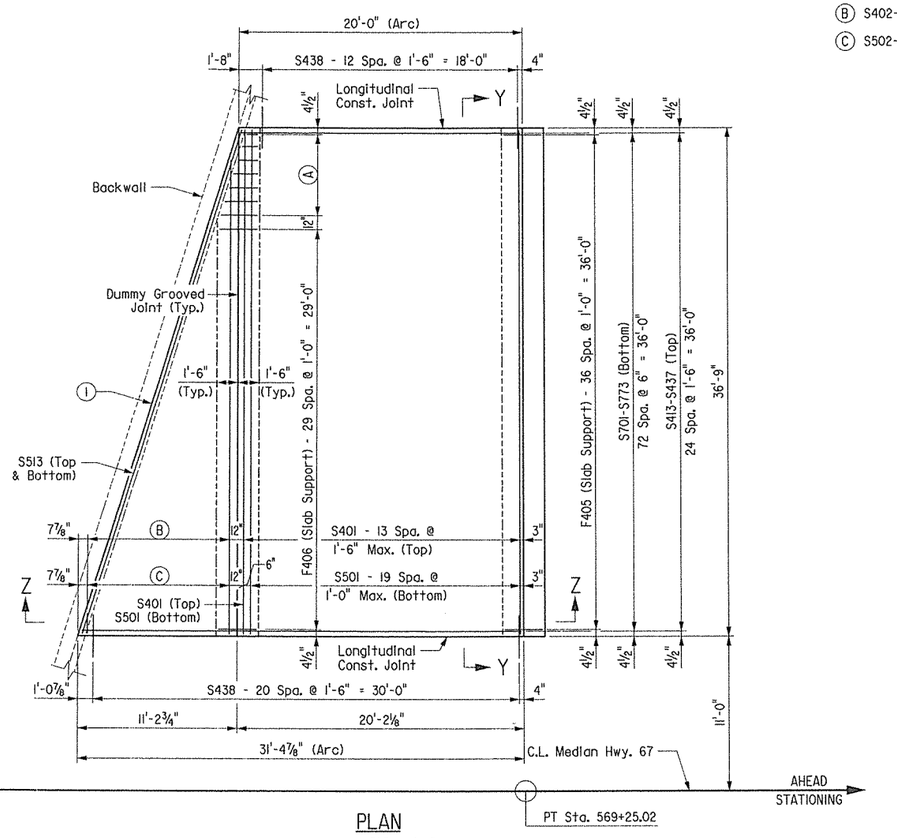

PLAN

Scale: 3/16" = 1'-0"

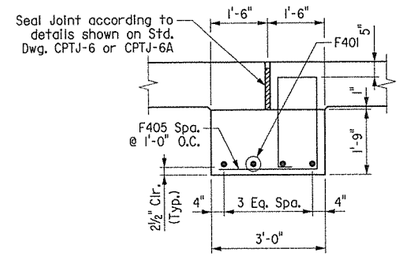

DETAILS OF SUPPORT AT END OF SLAB

Scale: ½" = 1'-0"

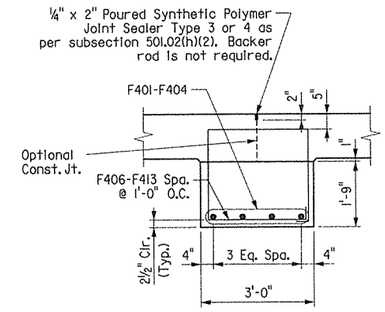

DETAILS OF INTERIOR SUPPORT OF SLAB

Scale: ½" = 1'-0"

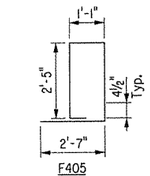

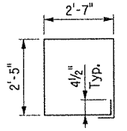

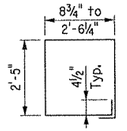

BAR LIST - ONE TYPE 2 SPECIAL APPROACH SLAB

Mark	No. Req'd.	Length	Pin Dia.
F401	5	36'-5"	Str.
F402 to F404	1 Each	35'-7" to 30'-6"	Str.
F405	37	8'-10"	2"
F406	30	10'-6"	2"
F407 to F413	1 Each	10'-5" to 6'-8"	2"
S401	14	36'-5"	Str.
S402 to S412	1 Each	34'-2" to 1'-5"	Str.
S413 to S437	1 Each	19'-9" to 30'-11"	Str.
S438	34	3'-0"	Str.
S501	21	36'-5"	Str.
S502 to S512	1 Each	34'-2" to 1'-5"	Str.
S513	2	38'-0"	Str.
S701 to S773	1 Each	19'-9" to 30'-11"	Str.

QUANTITIES FOR ONE TYPE 2 SPECIAL APPROACH SLAB

Reinforcing Steel (Lbs.)	Concrete (Cu. Yds.)
6,477	56.79

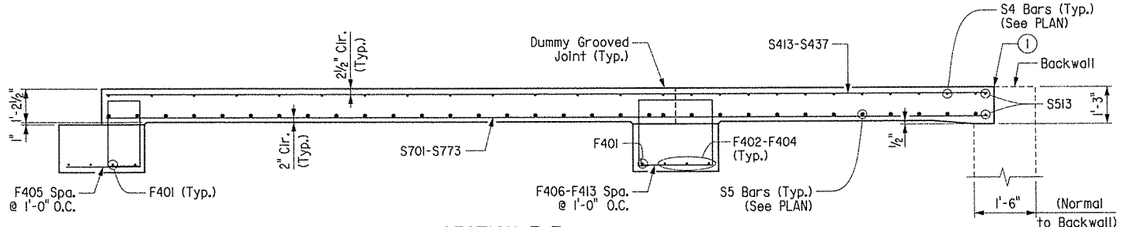

SECTION Z-Z

Scale: 3/8" = 1'-0"

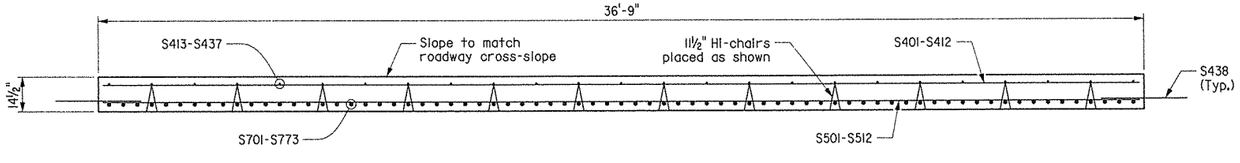

SECTION Y-Y

Scale: 3/8" = 1'-0"

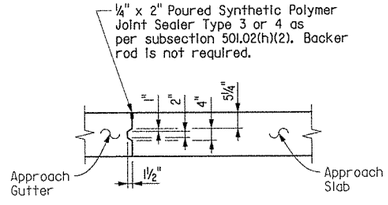

DETAILS OF LONGITUDINAL CONSTRUCTION JOINT

Scale: ½" = 1'-0"

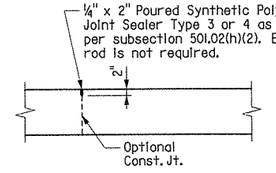

DETAILS OF DUMMY GROOVED JOINT

Scale: ½" = 1'-0"

STATE OF ARKANSAS
REGISTERED PROFESSIONAL ENGINEER
No. 11339
LARRY W. MILLER
3-24-14

BRIDGE ENGINEER

DETAILS OF TYPE SPECIAL 2 APPROACH SLABS REDMOND ROAD

ROUTE 67 SEC. 10

ARKANSAS STATE HIGHWAY COMMISSION

LITTLE ROCK, ARK.

DRAWN BY: JAP DATE: 03-13 FILENAME: b061276al_as2.dgn

CHECKED BY: GS DATE: 03-01-13 SCALE: As Shown

DESIGNED BY: LWM DATE: 03-13

BRIDGE NO. A7282 DRAWING NO. 53630

DATE REVISED	DATE FILMED	DATE REVISED	DATE FILMED

FED. ROAD DIST. NO.	STATE	FED. AID PROJ. NO.	SHEET NO.	TOTAL SHEETS
6	ARK.			
JOB NO.		061276	227	438
(1) B7282		APPROACH SLAB 3		53631

NOTE: Construct Approach Slab, including longitudinal reinforcing, on concentric arcs to C.L. Hwy. 67.

NOTE: All transverse reinforcing steel shall be placed on radial lines. Spacing is measured along right edge of slab (right is defined by direction of stationing).

(1) 2" x ¼" Poured Synthetic Polymer Joint Sealer Type 3 or 4 as per Subsection 501.02(h)(2). Backer rod is not required.

(A) F407-F415 (Slab Support) - 8 Spa. @ 1'-0" = 8'-0"

(B) S402-S412 - 10 Spa. @ 1'-0" Max. (Top)

(C) S502-S512 - 10 Spa. @ 1'-0" Max. (Bottom)

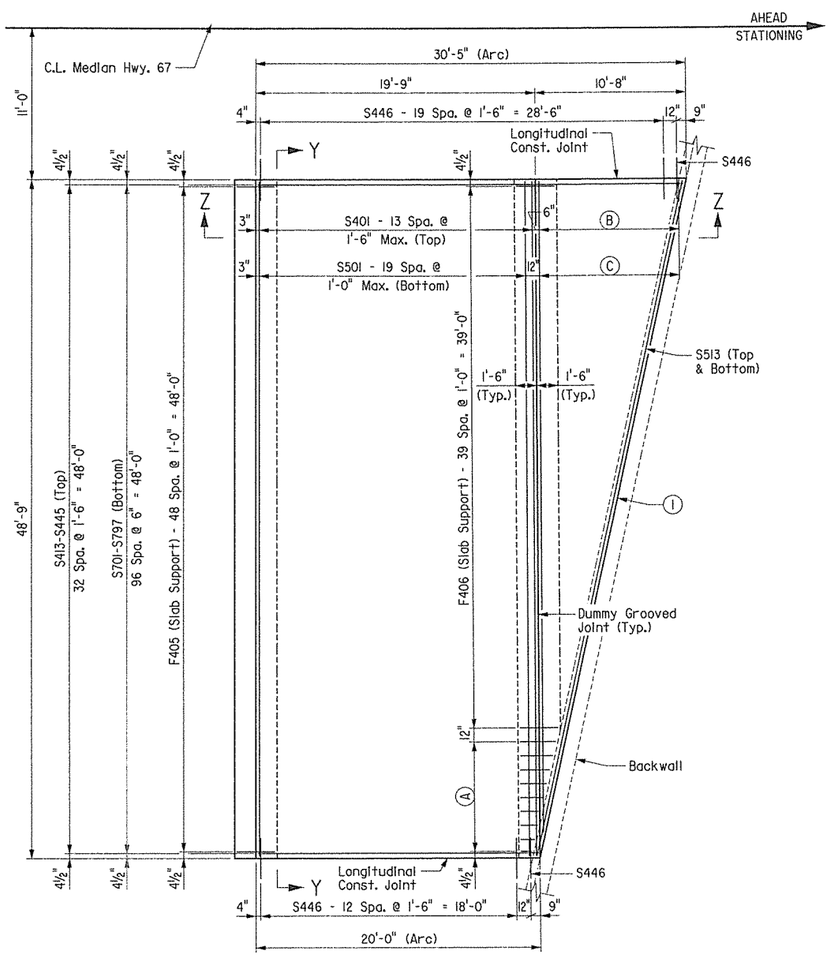

PLAN

Scale: 3/16" = 1'-0"

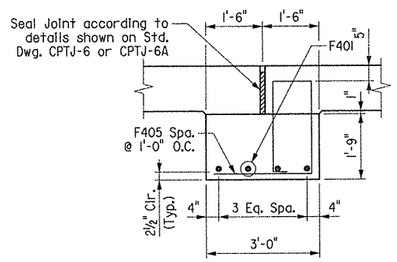

DETAILS OF SUPPORT AT END OF SLAB

Scale: ½" = 1'-0"

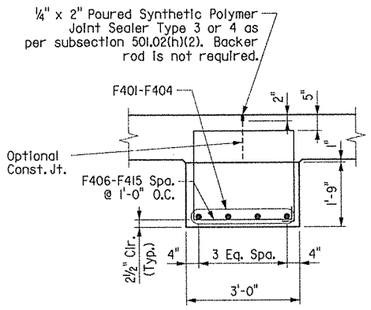

DETAILS OF INTERIOR SUPPORT OF SLAB

Scale: ½" = 1'-0"

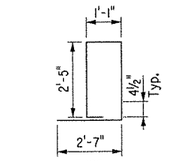

F405

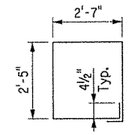

F406

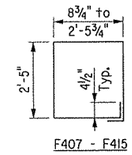

F407 - F415

BAR LIST - ONE TYPE 3 SPECIAL APPROACH SLAB

Mark	No. Req'd.	Length	Pin Dia.
F401	5	48'-5"	Str.
F402 to F404	1 Each	47'-3" to 40'-1"	Str.
F405	49	8'-10"	2"
F406	40	10'-4"	2"
F406 to F414	1 Each	10'-2" to 6'-8"	2"
S401	14	48'-5"	Str.
S402 to S412	1 Each	46'-8" to 1'-6"	Str.
S413 to S445	1 Each	30'-0" to 19'-9"	Str.
S446	35	3'-0"	Str.
S501	20	48'-5"	Str.
S502 to S512	1 Each	46'-8" to 1'-6"	Str.
S513	2	49'-7"	Str.
S701 to S797	1 Each	30'-0" to 19'-9"	Str.

QUANTITIES FOR ONE TYPE 3 SPECIAL APPROACH SLAB

Reinforcing Steel (Lbs.)	Concrete (Cu. Yds.)
8,430	74.23

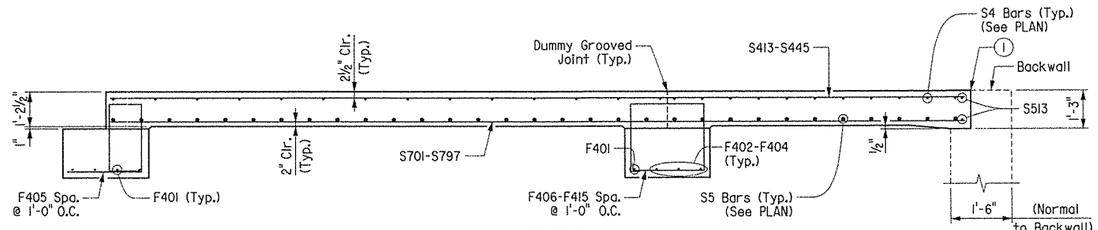

SECTION Z-Z

Scale: 3/8" = 1'-0"

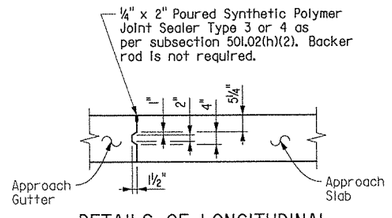

DETAILS OF LONGITUDINAL CONSTRUCTION JOINT

Scale: ½" = 1'-0"

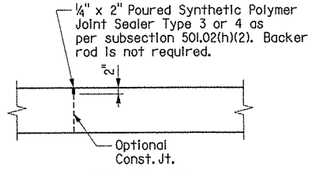

DETAILS OF DUMMY GROOVED JOINT

Scale: ½" = 1'-0"

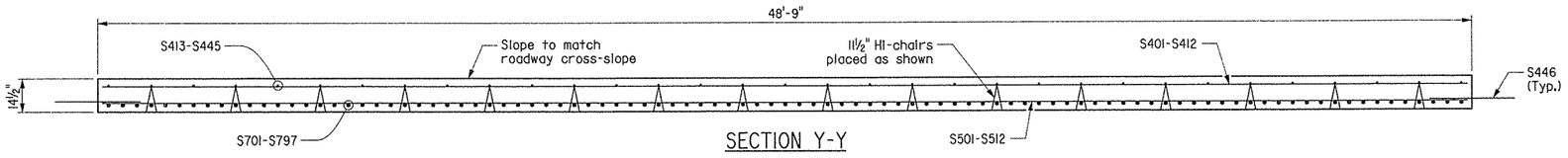

SECTION Y-Y

Scale: 3/8" = 1'-0"

STATE OF ARKANSAS
REGISTERED PROFESSIONAL ENGINEER
No. 13393
3-24-14
LARRY W. MILLER
BRIDGE ENGINEER

DETAILS OF TYPE SPECIAL 3 APPROACH SLABS REDMOND ROAD

ROUTE 67 SEC. 10

ARKANSAS STATE HIGHWAY COMMISSION

LITTLE ROCK, ARK.

DRAWN BY: JAP DATE: 03-13 FILENAME: b061276bl_as3.dgn

CHECKED BY: GS DATE: 03-01-13 SCALE: As Shown

DESIGNED BY: LWM DATE: 03-13

BRIDGE NO. A7283 DRAWING NO. 53631

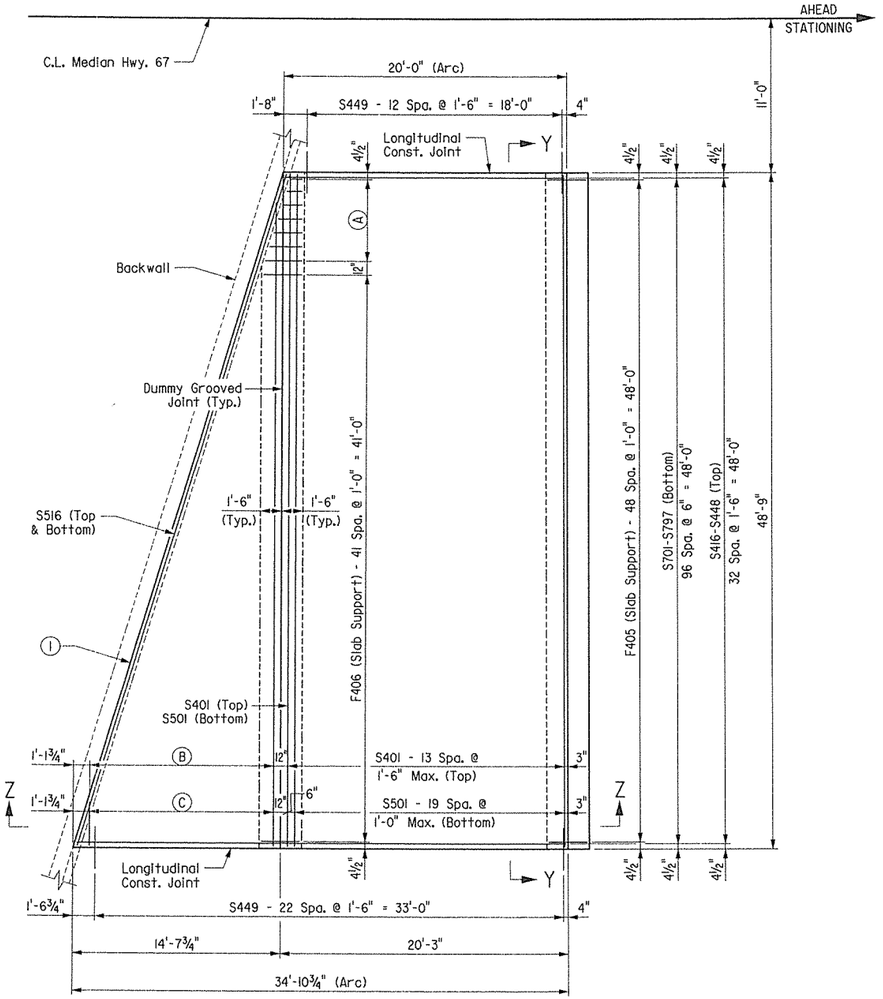

PLAN

Scale: 3/16" = 1'-0"

NOTE: Construct Approach Slab, including longitudinal reinforcing on concentric arcs to C.L. Hwy. 67.

NOTE: All transverse reinforcing steel shall be placed on radial lines. Spacing is measured along right edge of slab (right is defined by direction of stationing).

(1) 2" x ¼" Poured Synthetic Polymer Joint Sealer Type 3 or 4 as per Subsection 501.02(h)(2). Backer rod is not required.

(A) F407-F413 (Slab Support) - 6 Spa. @ 1'-0" = 6'-0"

(B) S402-S415 - 13 Spa. @ 1'-0" Max. (Top)

(C) S502-S515 - 13 Spa. @ 1'-0" Max. (Bottom)

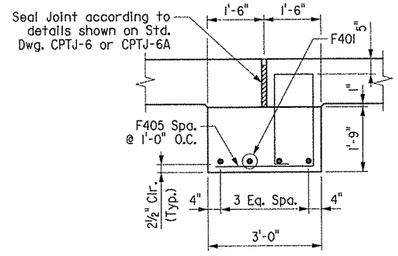

DETAILS OF SUPPORT AT END OF SLAB

Scale: ½" = 1'-0"

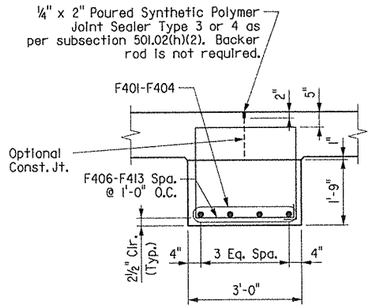

DETAILS OF INTERIOR SUPPORT OF SLAB

Scale: ½" = 1'-0"

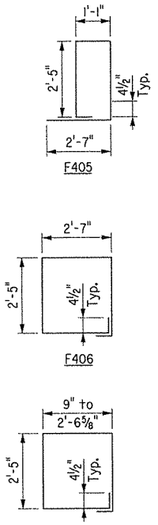

DATE REVISED	DATE FILMED	DATE REVISED	DATE FILMED

FED. ROAD DIST. NO.	STATE	FED. AID PROJ. NO.	SHEET NO.	TOTAL SHEETS
6	ARK.			
JOB NO.		061276	228	438
(1) B7282		APPROACH SLAB 4		53632

BAR LIST - ONE TYPE 4 SPECIAL APPROACH SLAB

Mark	No. Req'd.	Length	Pin Dia.
F401	5	48'-5"	Str.
F402 to F404	1 Each	47'-6" to 42'-4"	Str.
F405	49	8'-10"	Str.
F406	42	10'-4"	Str.
F407 to F413	1 Each	10'-4" to 6'-8"	Str.
S401	14	48'-5"	Str.
S402 to S415	1 Each	46'-4" to 3'-1"	Str.
S416 to S448	1 Each	19'-9" to 34'-5"	Str.
S449	36	3'-0"	Str.
S501	21	48'-5"	Str.
S502 to S515	1 Each	46'-4" to 3'-1"	Str.
S516	2	50'-6"	Str.
S701 to S797	1 Each	19'-9" to 34'-5"	Str.

QUANTITIES FOR ONE TYPE 4 SPECIAL APPROACH SLAB

Reinforcing Steel (Lbs.)	Concrete (Cu. Yds.)
9,120	79.28

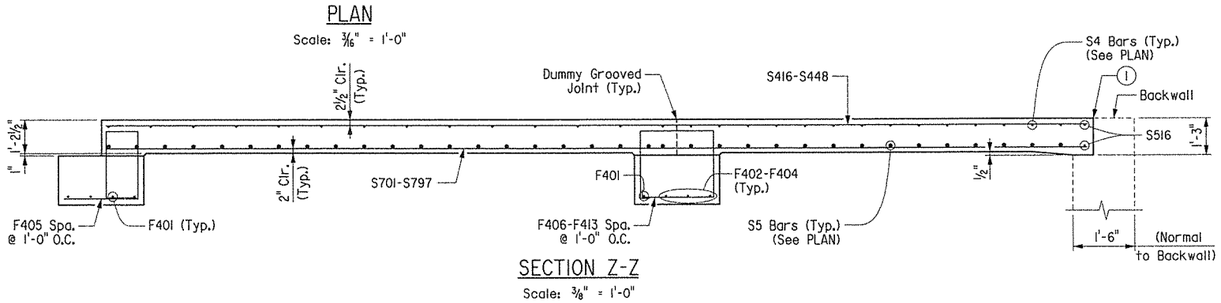

SECTION Z-Z

Scale: 3/8" = 1'-0"

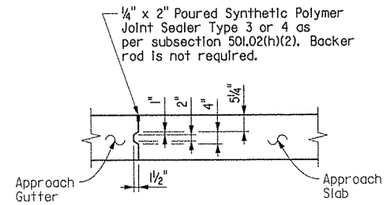

DETAILS OF LONGITUDINAL CONSTRUCTION JOINT

Scale: ½" = 1'-0"

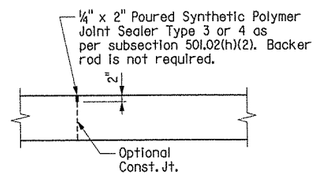

DETAILS OF DUMMY GROOVED JOINT

Scale: ½" = 1'-0"

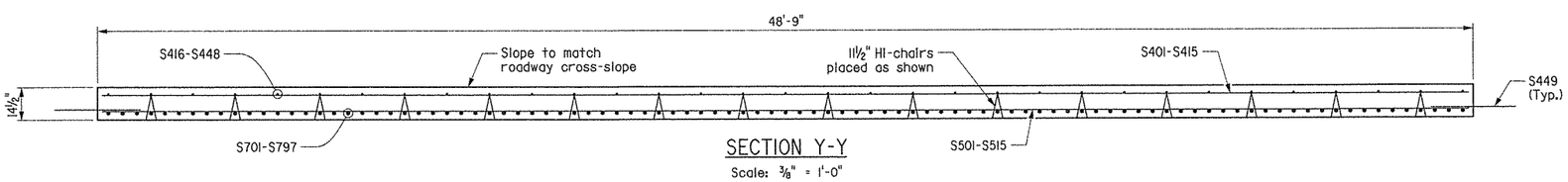

SECTION Y-Y

Scale: 3/8" = 1'-0"

STATE OF ARKANSAS
REGISTERED PROFESSIONAL ENGINEER
No. 11339
3-24-14
LARRY W. MILLER
BRIDGE ENGINEER

DETAILS OF TYPE SPECIAL 4 APPROACH SLABS REDMOND ROAD

ROUTE 67 SEC. 10

ARKANSAS STATE HIGHWAY COMMISSION

LITTLE ROCK, ARK.

DRAWN BY: JAP DATE: 03-13
CHECKED BY: GS DATE: 03-01-13
DESIGNED BY: LWM DATE: 03-13
FILENAME: b061276bl_as4.dgn
SCALE: As Shown

BRIDGE NO. A7284 DRAWING NO. 53632

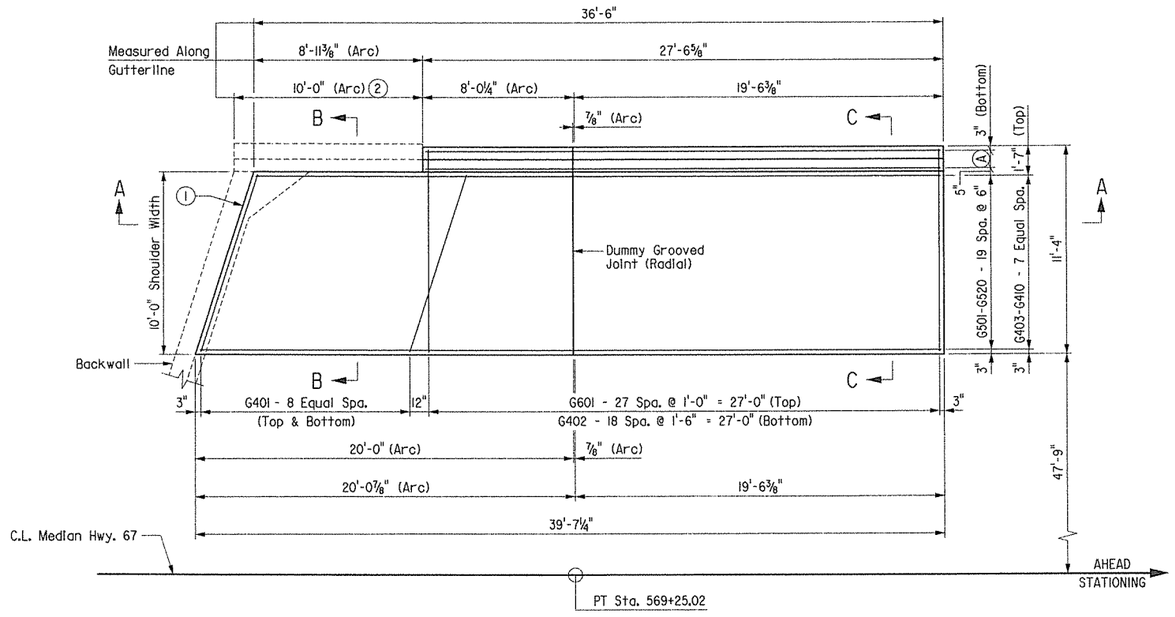

PLAN

Scale: ¼" = 1'-0"

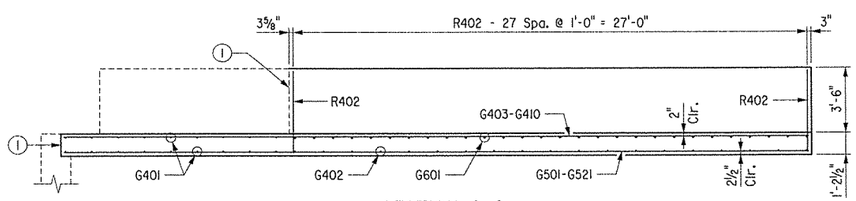

SECTION A-A

Scale: ¼" = 1'-0"

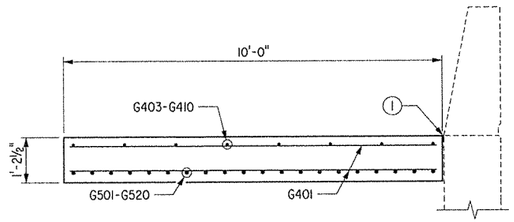

SECTION B-B

Scale: ½" = 1'-0"

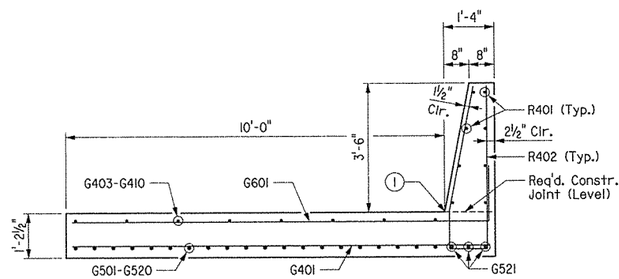

SECTION C-C

Scale: ½" = 1'-0"

NOTE: Construct Approach Gutter on concentric arcs to C.L. Hwy. 67.

NOTE: All transverse reinforcing steel shall be placed on radial lines. Spacing is measured along right edge of slab (right is defined by direction of stationing).

(1) 2" x ¼" Poured Synthetic Polymer Joint Sealer Type 3 or 4 as per Subsection 501.02(h)(2). Backer rod is not required.

(2) See End Bent Details for construction of 10'-0" Rail and Wingwall.

(A) G521 - 2 Spa. @ 5½" = 11"

DATE REVISED	DATE FILMED	DATE REVISED	DATE FILMED

FED. ROAD DIST. NO.	STATE	FED. AID PROJ. NO.	SHEET NO.	TOTAL SHEETS
6	ARK.			
JOB NO.		061276	229	438
(1) A7282		APPROACH GUTTER I		53633

BAR LIST - ONE TYPE I SPECIAL APPROACH GUTTER

Mark	No. Req'd.	Length	Pin Dia.
G401	18	10'-1"	Str.
G402	19	11'-0"	Str.
G403 to G410	1 Each	39'-2" to 36'-3"	Str.
G501 to G520	1 Each	39'-2" to 36'-3"	Str.
G521	3	27'-2"	Str.
G601	28	12'-2"	4½"
R401	8	27'-2"	Str.
R402	28	9'-9"	2"

QUANTITIES FOR ONE TYPE I SPECIAL APPROACH GUTTER

Reinforcing Steel (Lbs.)	Concrete (Cu. Yds.)
2,173	22.25

Bending Diagrams

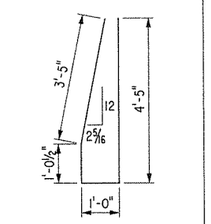

NOTE: Dimensions are out to out of bars.

STATE OF ARKANSAS
REGISTERED PROFESSIONAL ENGINEER
No. 11339
3-24-14
LARRY W. MILLER

BRIDGE ENGINEER

DETAILS OF TYPE SPECIAL I APPROACH GUTTERS REDMOND ROAD

ROUTE 67 SEC. 10

ARKANSAS STATE HIGHWAY COMMISSION

LITTLE ROCK, ARK.

DRAWN BY: JAP DATE: 03-13
CHECKED BY: GS DATE: 03-01-13
DESIGNED BY: LWM DATE: 03-13

FILENAME: b061276al_gl.dgn
SCALE: As Shown

BRIDGE NO. A7285 DRAWING NO. 53633

DATE REVISED	DATE FILMED	DATE REVISED	DATE FILMED

FED. ROAD DIST. NO.	STATE	FED. AID PROJ. NO.	SHEET NO.	TOTAL SHEETS
6	ARK.			
JOB NO.		061276	230	438
(1)	A&B7282	APPROACH GUTTER 2		53634

NOTE: Construct Approach Gutter on concentric arcs to C.L. Hwy. 67.

NOTE: All transverse reinforcing steel shall be placed on radial lines. Spacing is measured along right edge of slab (right is defined by direction of stationing).

(1) 2" x ¼" Poured Synthetic Polymer Joint Sealer Type 3 or 4 as per Subsection 501.02(h)(2). Backer rod is not required.

(2) See End Bent Details for construction of Median Rail.

(A) G413 - 1 Spa. @ 1'-6" = 1'-6" (Top)

(B) G537 - 3 Spa. @ 6" = 1'-6" (Bottom)

(C) G604-G605 - 1 Spa. @ 1'-0" = 1'-0" (Top)
G417-G418 - 1 Spa. @ 1'-0" = 1'-0" (Bottom)

(D) G606-G608 - 2 Spa. @ 1'-0" = 2'-0" (Top)
G419-G421 - 2 Spa. @ 1'-0" = 2'-0" (Bottom)

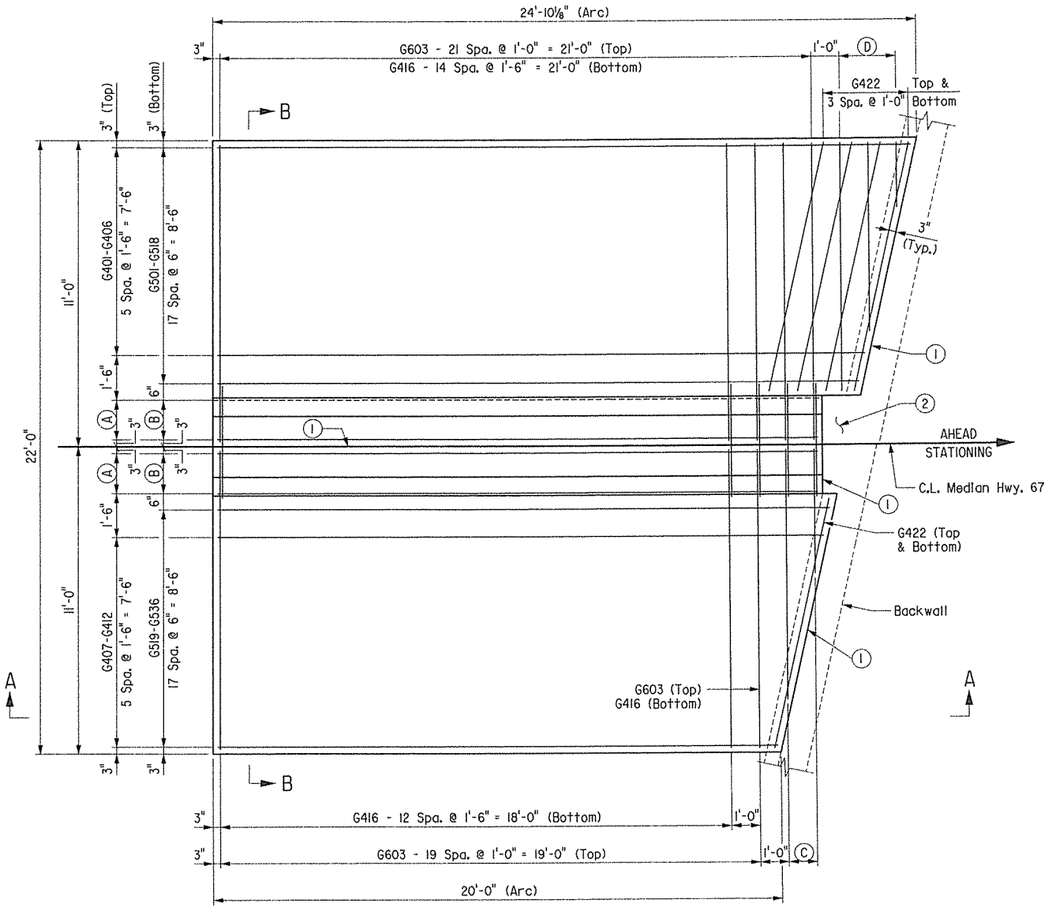

GUTTER 2A PLAN

Scale: ⅜" = 1'-0"

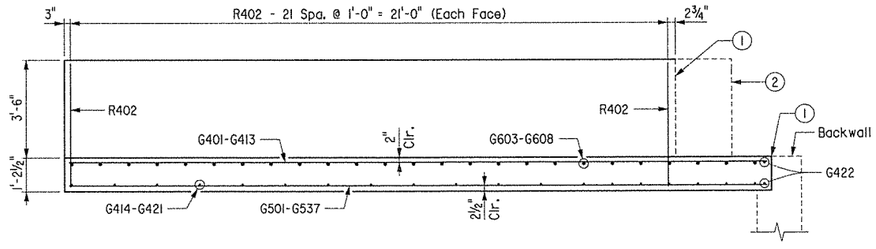

SECTION A-A

Scale: ⅜" = 1'-0"

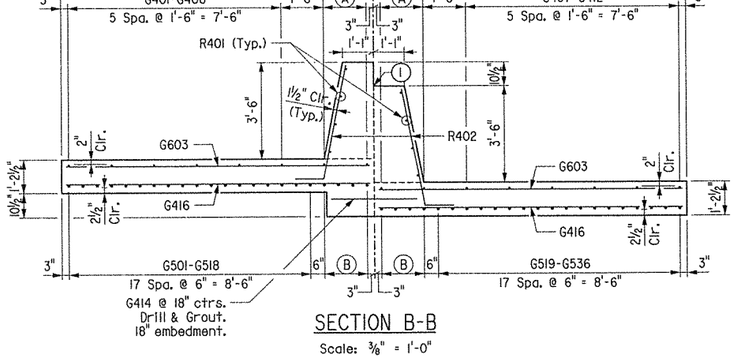

SECTION B-B

Scale: ⅜" = 1'-0"

BAR LIST - ONE TYPE 2A SPECIAL APPROACH GUTTER

Mark	No. Req'd.	Length	Pin Dia.
G401 to G406	1 Each	24'-5" to 22'-10"	Str.
G407 to G412	1 Each	21'-4" to 19'-8"	Str.
G413	4	21'-1"	Str.
G414	16	3'-0"	Str.
G415	Not used		
G416	29	10'-8"	Str.
G417	1	8'-11"	Str.
G418	1	4'-5"	Str.
G419	1	8'-11"	Str.
G420	1	6'-9"	Str.
G421	1	2'-4"	Str.
G422	10	9'-1"	Str.
G501 to G518	1 Each	24'-5" to 22'-7"	Str.
G519 to G536	1 Each	21'-6" to 19'-8"	Str.
G537	8	21'-1"	Str.
G603	42	10'-8"	Str.
G604	1	8'-11"	Str.
G605	1	4'-5"	Str.
G606	1	8'-11"	Str.
G607	1	6'-9"	Str.
G608	1	2'-4"	Str.
R401	8	21'-1"	Str.
R402	44	5'-4"	2"

Bending Diagrams

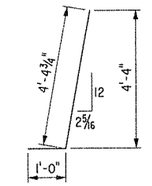

R402

NOTE: Dimensions are out to out of bars.

QUANTITIES FOR ONE TYPE 2A SPECIAL APPROACH GUTTER

Reinforcing Steel (Lbs.)	Concrete (Cu. Yds.)
2,547	30.66

STATE OF ARKANSAS
REGISTERED PROFESSIONAL ENGINEER
No. 11539
LARRY W. MILLER
3-24-14

BRIDGE ENGINEER

SHEET 1 OF 2
DETAILS OF
TYPE SPECIAL 2 APPROACH GUTTERS
REDMOND ROAD

ROUTE 67 SEC. 10

ARKANSAS STATE HIGHWAY COMMISSION

LITTLE ROCK, ARK.

DRAWN BY: JAP DATE: 03-13 FILENAME: b061276ml_g21.dgn
CHECKED BY: GS DATE: 03-01-13 SCALE: As Shown
DESIGNED BY: LWM DATE: 03-13

BRIDGE NO. A&B7282 DRAWING NO. 53634

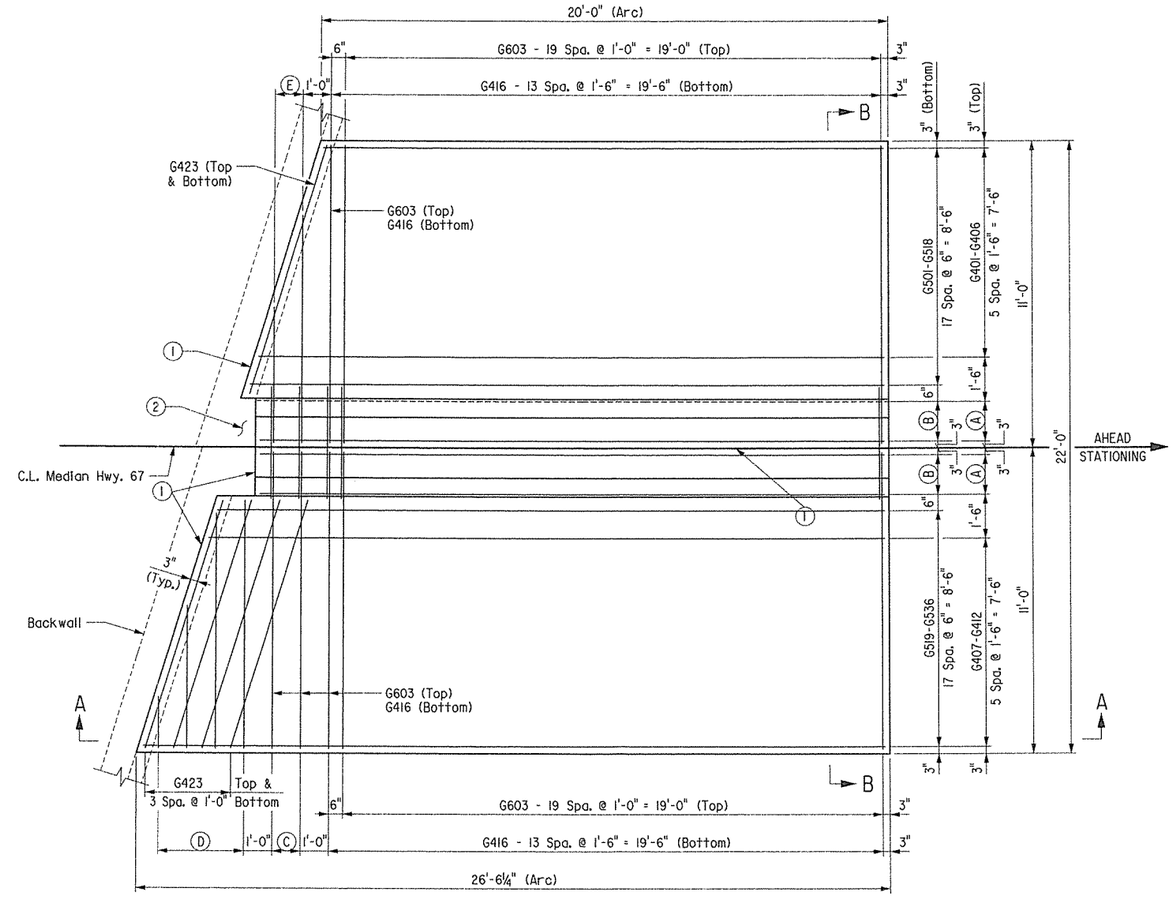

GUTTER 2B PLAN

Scale: ⅜" = 1'-0"

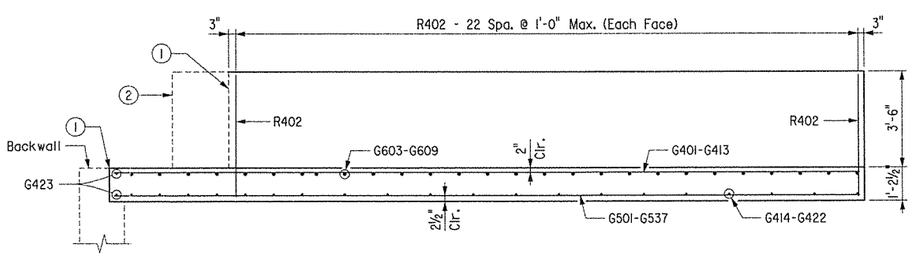

SECTION A-A

Scale: ⅜" = 1'-0"

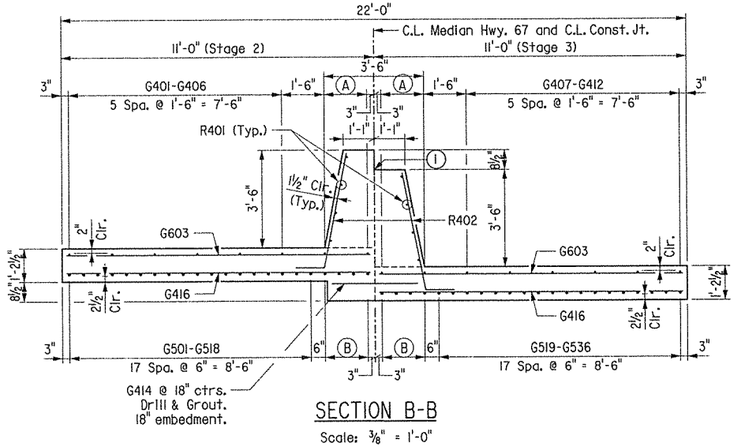

SECTION B-B

Scale: ⅜" = 1'-0"

NOTE: Construct Approach Gutter on concentric arcs to C.L. Hwy. 67.

NOTE: All transverse reinforcing steel shall be placed on radial lines. Spacing is measured along right edge of slab (right is defined by direction of stationing).

(1) 2" x ¼" Poured Synthetic Polymer Joint Sealer Type 3 or 4 as per Subsection 501.02(h)(2). Backer rod is not required.

(2) See End Bent Details for construction of Median Rail.

(A) G413 - 1 Spa. @ 1'-6" = 1'-6" (Top)

(B) G537 - 3 Spa. @ 6" = 1'-6" (Bottom)

(C) G603 - 1 Spa. @ 1'-0" = 1'-0" (Top)
G416 - 1 Spa. @ 1'-0" = 1'-0" (Bottom)

(D) G604-G607 - 3 Spa. @ 1'-0" = 3'-0" (Top)
G417-G420 - 3 Spa. @ 1'-0" = 3'-0" (Bottom)

(E) G608-G609 - 1 Spa. @ 1'-0" = 1'-0" (Top)
G421-G422 - 1 Spa. @ 1'-0" = 1'-0" (Bottom)

DATE REVISED	DATE FILMED	DATE REVISED	DATE FILMED

FED. ROAD DIST. NO.	STATE	FED. AID PROJ. NO.	SHEET NO.	TOTAL SHEETS
6	ARK.			
JOB NO.		061276	231	438
(1) A&B7282		APPROACH GUTTER 2		53635

BAR LIST - ONE TYPE 2B SPECIAL APPROACH GUTTER

Bending Diagrams

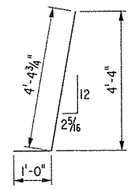

R402

NOTE: Dimensions are out to out of bars.

Mark	No. Req'd.	Length	Pin Dia.
G401 to G406	1 Each	19'-9" to 22'-0"	Str.
G407 to G412	1 Each	23'-9" to 26'-1"	Str.
G413	4	22'-0"	Str.
G414	17	3'-0"	Str.
G415	Not used		
G416	30	10'-8"	Str.
G417	1	8'-11"	Str.
G418	1	8'-5"	Str.
G419	1	5'-1"	Str.
G420	1	1'-9"	Str.
G421	1	8'-2"	Str.
G422	1	4'-10"	Str.
G423	10	9'-3"	Str.
G501 to G518	1 Each	19'-9" to 22'-4"	Str.
G519 to G536	1 Each	23'-6" to 26'-1"	Str.
G537	8	22'-0"	Str.
G603	44	10'-8"	Str.
G604	1	8'-11"	Str.
G605	1	8'-5"	Str.
G606	1	5'-1"	Str.
G607	1	1'-9"	Str.
G608	1	8'-2"	Str.
G609	1	4'-10"	Str.
R401	8	22'-0"	Str.
R402	46	5'-4"	2"

QUANTITIES FOR ONE TYPE 2B SPECIAL APPROACH GUTTER

Reinforcing Steel (Lbs.)	Concrete (Cu. Yds.)
2,663	31.67

STATE OF ARKANSAS
Larry W. Miller
REGISTERED PROFESSIONAL ENGINEER
No. 11339
3-24-14
LARRY W. MILLER
BRIDGE ENGINEER

SHEET 2 OF 2
DETAILS OF
TYPE SPECIAL 2 APPROACH GUTTERS
REDMOND ROAD

ROUTE 67 SEC. 10

ARKANSAS STATE HIGHWAY COMMISSION

LITTLE ROCK, ARK.

DRAWN BY: JAP DATE: 03-13
CHECKED BY: GS DATE: 03-01-13
DESIGNED BY: LWM DATE: 03-13
FILENAME: b061276ml_g22.dgn
SCALE: As Shown

BRIDGE NO. A&B7282 DRAWING NO. 53635

For R/W Data, See Roadway Plans

See Dwg. No. 53675 for location and type of special approach slabs and special approach gutters.

DATE REVISED	DATE FILMED	DATE REVISED	DATE FILMED	FED. ROAD DIST. NO.	STATE	FED. AID PROJ. NO.	SHEET NO.	TOTAL SHEETS
				6	ARK.			
				JOB NO.		061276	232	438
				(1) A&B7283		LAYOUT		53636

HORIZONTAL CURVE DATA
C.L. CONSTRUCTION & MEDIAN

PI Sta 592+30.21
PC Sta 586+11.01
PT Sta 598+20.53
R = 2291.83'
L = 1209.52'
T = 619.20'
Delta = 30°14'17" Rt.
D = 2°30'00"

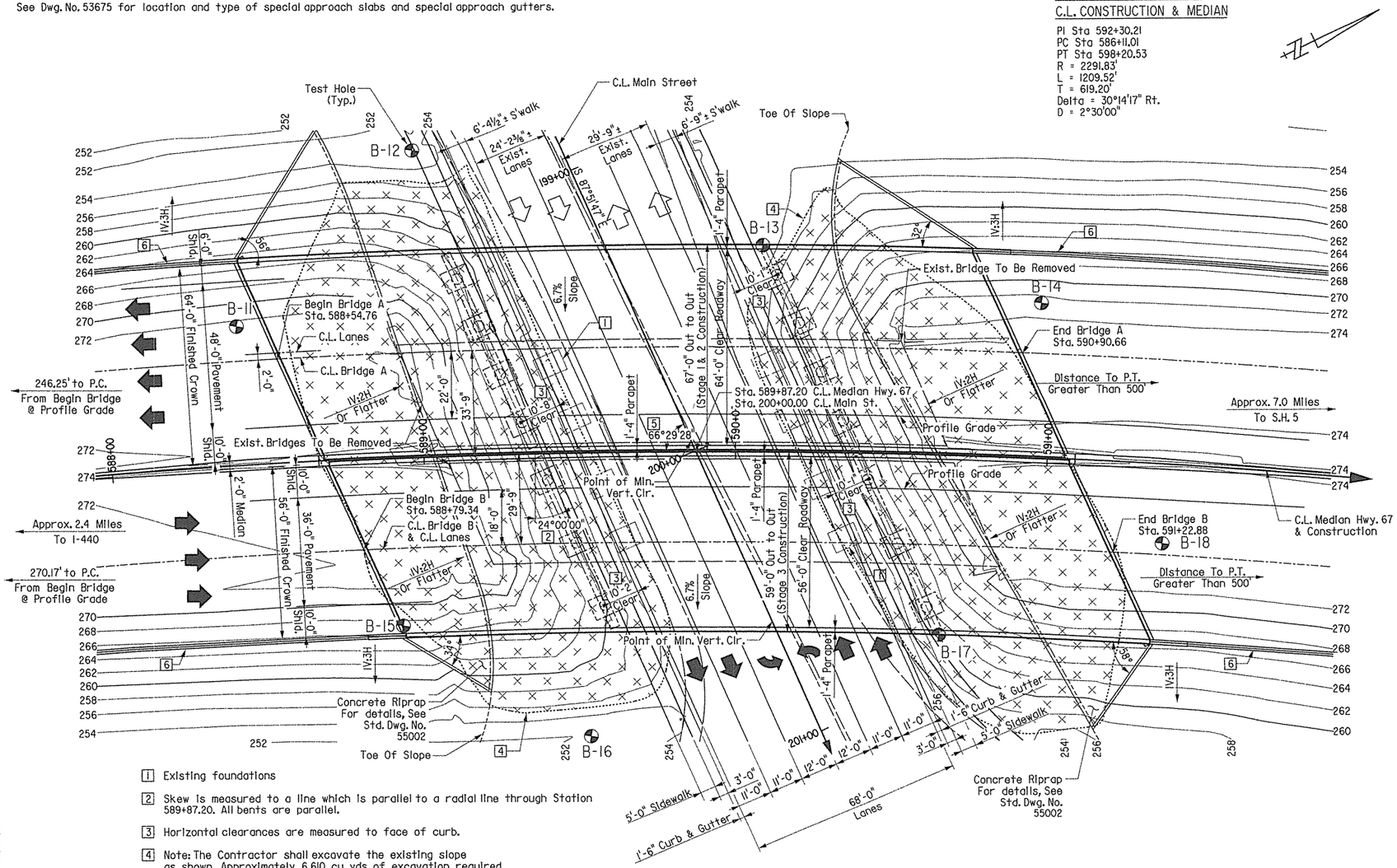

PLAN

For utility locations, see Dwg. No. 53638.

[1] Existing foundations

[2] Skew is measured to a line which is parallel to a radial line through Station 589+87.20. All bents are parallel.

[3] Horizontal clearances are measured to face of curb.

[4] Note: The Contractor shall excavate the existing slope as shown. Approximately 6,610 cu. yds. of excavation required. (This quantity is included in the Roadway earthwork quantity.)

[5] Angle is measured to local tangent.

[6] Barrier wall. See Roadway details.

GENERAL NOTES

BENCH MARK: Square cut in the east corner of the south end bent. Survey control point no. 972. N=194356.32, E=1273988.07, Elev. 273.35, Sta. 589+21.15, Offset 40.38 Right.

CONSTRUCTION SPECIFICATIONS: Arkansas State Highway and Transportation Department Standard Specifications for Highway Construction (2014 Edition) with applicable supplemental specifications and special provisions. Unless otherwise noted in the plans, section and subsection numbers refer to the Standard Construction Specifications.

DESIGN SPECIFICATIONS: AASHTO LRFD Bridge Design Specifications (2010, 5th Edition) with interim specifications.

LIVE LOADING: HL93

SEISMIC ZONE: 2 SI = 0.099, Fv = 2.4

MATERIALS AND STRENGTHS:

Class S(AE) Concrete (Superstructure)	f'c = 4,000 psi
Class S Concrete (Substructure)	f'c = 3,500 psi
Reinforcing Steel (AASHTO M 31 or M322 Type A, Gr. 60)	fy = 60,000 psi
Structural Steel (AASHTO M 270, Gr. 50)	Fy = 50,000 psi
Structural Steel (AASHTO M 270, Gr. 36)	Fy = 36,000 psi

BORING LOGS: Boring Logs may be obtained from the Programs and Contracts Division.

STEEL PILING: All piling shall be HP12x53 (Grade 50) and shall be driven with an approved air, steam, or diesel hammer to a Minimum Safe Bearing Capacity of 95 tons per pile. Piles shall be driven into material designated as shale or sandstone on the boring legend. Lengths shown are for estimating quantities and for use in determining payment for cut-off and build-up in accordance with the Standard Specifications. Piles in end bents to be driven after embankment to bottom of cap is in place. On all piles the Contractor shall use approved steel H-Pile driving points.

PILE FOOTINGS: The top of footings shall be set a minimum of 2'-0" below finished ground. Foundations for footings shall be prepared in accordance with Section 801.04 and backfilled in accordance with Section 801.08.

BRIDGE DECK: The concrete bridge deck shall be given a fine finish as specified for final finishing in Subsection 802.19 for Class 5 Tined Bridge Roadway Surface Finish.

CLASS I PROTECTIVE SURFACE TREATMENT: Class I Protective Surface Treatment shall be applied to the roadway surface and to the roadway face and top of the concrete parapet rail.

PAINT: All structural steel except galvanized members, some surfaces in contact with concrete, and as otherwise noted, shall be painted as specified in Subsection 807.75. The color of paint shall be Aluminum and shall match Fed Std. 595B, Color Chip No. 37200.

EXISTING BRIDGE: Each existing bridge (Bridge Nos. 03078 and A3078) is 33'-6" wide and 162'-4½" long and consists of concrete deck on steel rolled beams supported by reinforced concrete columns and footings with concrete foundation piles. The existing bridge is located on the proposed alignment. Plans for existing bridge will be made available to the Contractor upon request to Programs and Contracts Division. Existing Dwg. Nos. 9281, 9289-9293.

REMOVAL AND SALVAGE: After Stage 1 construction is opened to traffic, the existing southbound bridge (No. 03078) shall be removed. After Stage 2 construction is opened to traffic, the existing northbound bridge (No. A3078) shall be removed. Both bridges shall be removed in accordance with Section 205. All material from existing bridges shall become the property of the Contractor.

SHORING: Shoring will be required to remove exising bridges and construct embankment and new bridges. Location of shoring to be determined by the Contractor. Payment for and details and design of shoring will be in accordance with Special Provision Job No. 061276 "Shoring".

MAINTENANCE OF TRAFFIC: See Roadway Drawings.

DETAIL DRAWINGS:	DRAWING NOS.
End Bents	53641-53644, 53648-53650, 53660-53662, 53666-53667
Intermediate Bents	53645-53647, 53663-53665
237'-0" Cont. Comp. W-Beam Unit	53651-53659
238'-0" Cont. Comp. W-Beam Unit	53668-53671
Elastomeric Bearings	53673-53674
Type Special Approach Slabs	53675-53679
Type Special Approach Gutters	53680-53683
Steel Piling	55020

STATE OF ARKANSAS
REGISTERED PROFESSIONAL ENGINEER
No. 13339
LARRY W. MILLER
3-24-14
BRIDGE ENGINEER

SHEET 1 OF 2
LAYOUT OF BRIDGES OVER MAIN STREET
REDMOND RD. & MAIN ST.
STRS. & APPRS. (JACKSONVILLE) (F)
PULASKI COUNTY

ROUTE 67 SEC. 10

ARKANSAS STATE HIGHWAY COMMISSION

LITTLE ROCK, ARK.

DRAWN BY: LWM DATE: 09-11
CHECKED BY: GS DATE: 03-01-13
DESIGNED BY: LWM DATE: 09-11
FILENAME: b061276m2_11.dgn
SCALE: 1" = 20'

BRIDGE NO. A&B7283 DRAWING NO. 53636

DATE REVISED	DATE FILMED	DATE REVISED	DATE FILMED	FED. ROAD DIST. NO.	STATE	FED. AID PROJ. NO.	SHEET NO.	TOTAL SHEETS
				6	ARK.			
				JOB NO.		061276	233	438
				(1) A&B7283		LAYOUT		53637

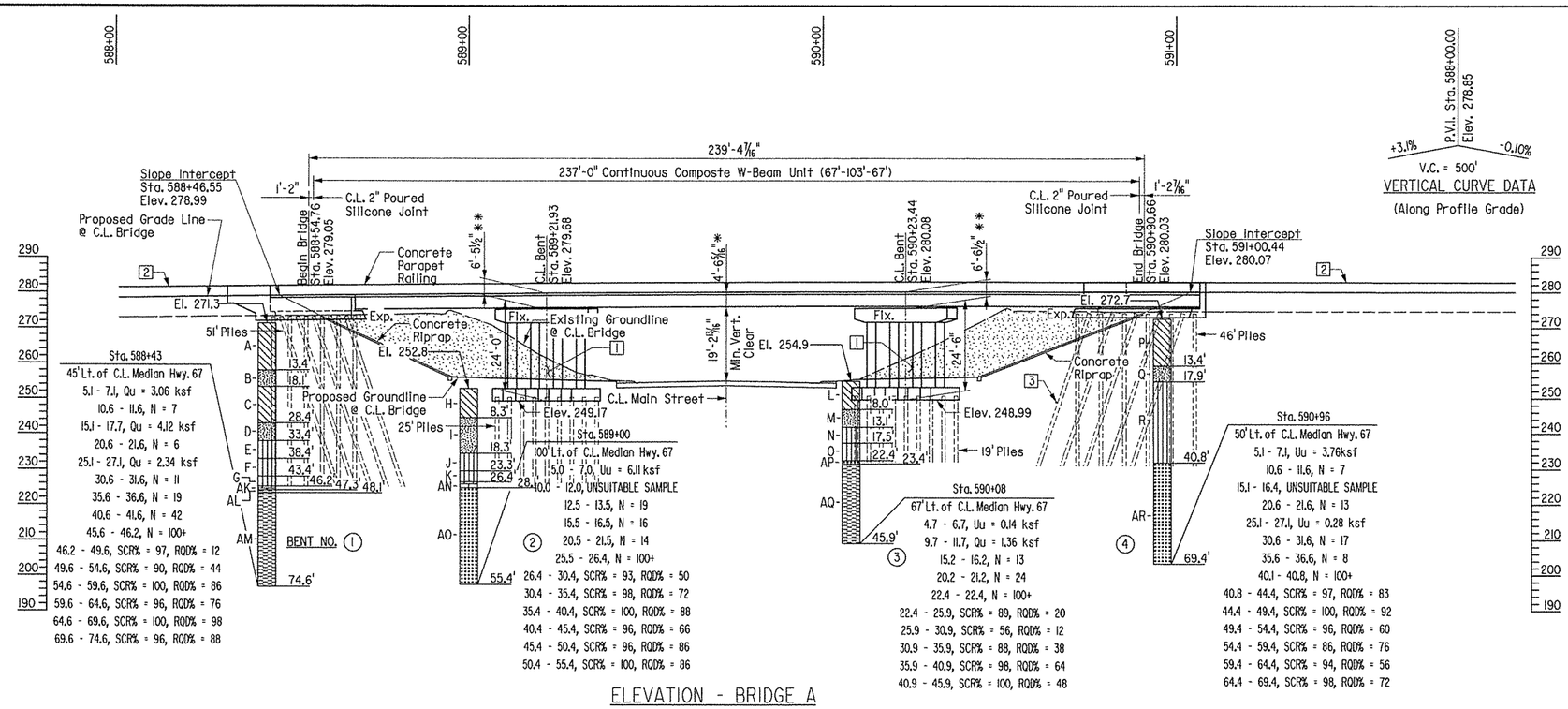

ELEVATION - BRIDGE A

Elevations shown are along CL Bridge. Stationing is along CL Median. Stations shown in elevation are determined by a radial projection from CL Bridge to CL Median. For more information refer to STAKING DIAGRAM on Dwg. No 53638.

[1] Note: Excavate the existing embankment at the bridge ends to achieve the slopes shown. See Dwg. No. 53636 for additional information.

[2] Barrier wall. See Roadway details.

[3] Fiber optic cable.

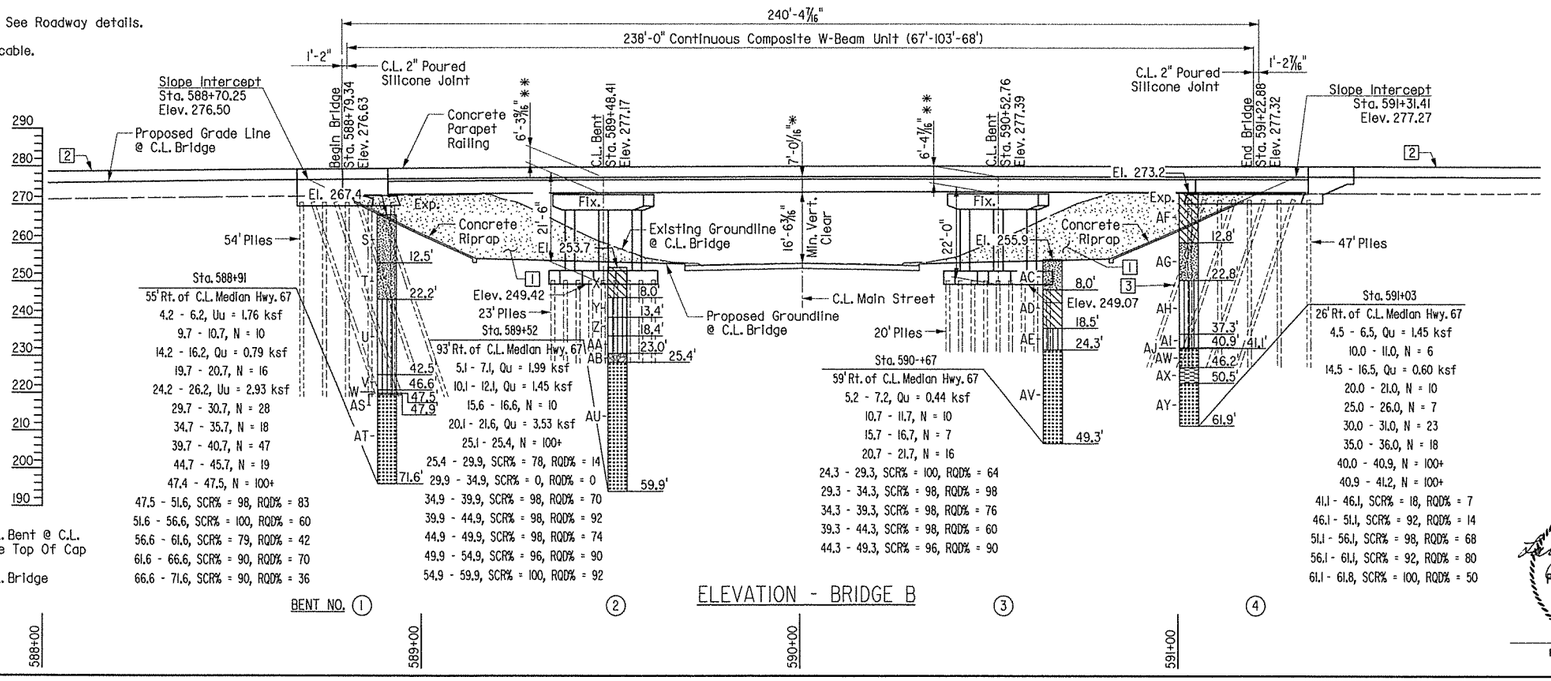

** Top Of Deck @ C.L. Bent @ C.L. Bridge To Low Side Top Of Cap

* Top Of Deck @ C.L. Bridge To Low Beam

ELEVATION - BRIDGE B

Boring Legend

A- Brown & Gray, Medium Stiff, Sandy Lean Clay.
B- Brown, Medium Dense, Silty Sand.
C- Brown & Gray, Medium Stiff, Sandy Lean Clay.
D- Brown & Gray, Medium Dense, Silty Sand.
E- Brown & Gray, Very Stiff, Silt.
F- Gray, Hard, Sandy Silt.
G- Gray, Very Hard, Silt with Sand.
H- Brown & Gray, Stiff, Sandy Lean Clay.
I- Brown, Medium Dense, Silty Sand.
J- Brown & Gray, Stiff, Elastic Silt.
K- Gray, Very Hard, Silt with Sand.
L- Gray, Stiff, Sandy Lean Clay.
M- Tan & Gray, Medium Dense, Silty Sand.
N- Brown, Stiff, Elastic Silt.
O- Brown & Gray, Very Stiff to Very Hard, Sandy Silt.
P- Brown, Gray, Red & Orange, Medium Stiff, Sandy Lean Clay.
Q- Red & Orange, Medium Dense, Silty Sand.
R- Brown & Gray, Medium Stiff to Very Hard, Silt.
S- Red & Brown, Loose, Silty Clayey Sand.
T- Red, Brown & Gray, Medium Dense, Silty Sand.
U- Red, Brown & Gray, Very Stiff to Hard, Silt.
V- Gray, Very Stiff, Sandy Silt.
W- Gray, Very Hard, Silt with Sand.
X- Brown & Gray, Stiff, Sandy Lean Clay.
Y- Gray & Brown, Stiff, Elastic Silt.
Z- Brown & Gray, Stiff, Silt.
AA- Gray, Stiff, Sandy Silt.
AB- Gray, Very Dense, Silty Gravel with Sand.
AC- Brown, Medium Dense, Clayey Sand.
AD- Brown & Gray, Medium Stiff, Sandy Lean Clay.
AE- Gray, Very Stiff, Sandy Silt.
AF- Brown, Red & Gray, Medium Stiff, Sandy Lean Clay.
AG- Red, Brown & Gray, Loose Silty Sand.
AH- Brown & Gray, Medium Stiff to Very Stiff, Silt.
AI- Black, Very Stiff to Very Hard, Silt with Sand.
AJ- Black, Very Dense, Silty Gravel with Sand.
AK- Limestone: Gray, Gray-Brown, Dk. Gray-Dk. Brown-Olive Green, Moderately to Severely Weathered.
AL- Shale: Black, Severe to Completely Weathered.
AM- Shale: Black to Dk. Gray, Moderately to Severely Weathered.
AN- Limestone: Gray, Gray-Brown, Dk. Gray-Dk. Brown-Olive Green, Moderately to Severely Weathered.
AO- Sandstone: Light Gray to Gray, Dk. Gray to Black, Moderately to Slightly Weathered.
AP- Sandstone: Gray, Dk. Gray, Fine Grain, Agrillaceous, Fresh to Moderately Weathered.
AQ- Shale: Dark Gray-Black, Moderately to Severely Weathered.
AR- Sandstone: Light Gray to Gray, Slightly Weathered to Fresh.
AS- Limestone Bed: Gray, Off White, Slightly Weathered.
AT- Sandstone: Gray to Dk. Gray, Fresh to Slightly Weathered.
AU- Sandstone: Dark Gray to Lt. Gray, Lt. Brown to Brown-Red, Slightly Weathered to Fresh.
AV- Sandstone: Light Gray to Gray, Lt. Brown to Brown-Red, Slightly Weathered to Fresh.
AW- Sandstone: Dark Gray, Gray, Slightly Weathered.
AX- Shale: Black to Dk. Gray, Slightly to Moderately Weathered.
AY- Sandstone: Light Gray to Dk. Gray, Slightly Weathered.

STATE OF ARKANSAS
Larry W. Miller
REGISTERED PROFESSIONAL ENGINEER
No. 11339
8-19-13
LARRY W. MILLER
BRIDGE ENGINEER

SHEET 2 OF 2
LAYOUT OF BRIDGES OVER MAIN STREET REDMOND RD. & MAIN ST. STRS. & APPRS. (JACKSONVILLE) (F) PULASKI COUNTY

ROUTE 67 SEC. 10

ARKANSAS STATE HIGHWAY COMMISSION

LITTLE ROCK, ARK.

DRAWN BY: LWM DATE: 09-11
CHECKED BY: GS DATE: 03-01-13
DESIGNED BY: LWM DATE: 09-11
FILENAME: b061276m2_12.dgn
SCALE: 1" = 20'

BRIDGE NO. A&B7283 DRAWING NO. 53637

DATE REVISED	DATE FILMED	DATE REVISED	DATE FILMED	FED. ROAD DIST. NO.	STATE	FED. AID PROJ. NO.	SHEET NO.	TOTAL SHEETS
				6	ARK.			
				JOB NO.		061276	234	438
				(1) A&B7283		STAKING DIAGRAM		53638

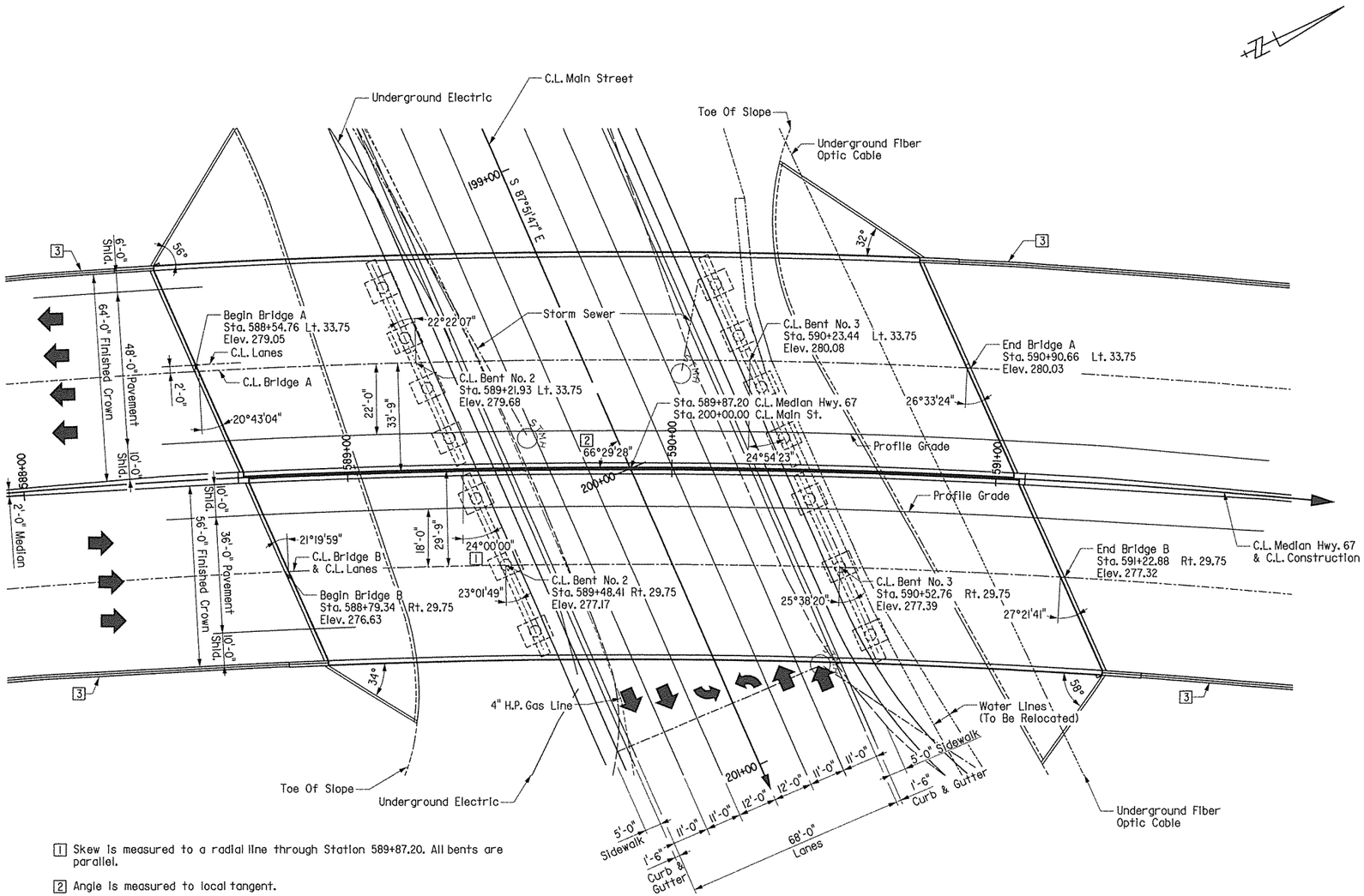

[1] Skew is measured to a radial line through Station 589+87.20. All bents are parallel.

[2] Angle is measured to local tangent.

[3] Barrier wall. See Roadway details.

PLAN

Stationing for the project is along C.L. Median and C.L. Construction. C.L. Bridge is on a horizontal curve concentric to C.L. Median. The bent stations are determined by projecting a radial line from C.L. Median to the C.L. Bridge. The offsets shown are measured from C.L. median along radial lines. The total bridge length, span lengths, and C.L. Joint to Beginning and End of Bridge dimensions are measured along the C.L. Bridge. Deck elevations are at C.L. Bridge. All bents are constructed along lines skewed from radial lines. Skew is measured at C.L. Bent for intermediate bents and at C.L. Joint for end bents.

STATE OF ARKANSAS
REGISTERED PROFESSIONAL ENGINEER
No. 13339
LARRY W. MILLER
8-19-13
BRIDGE ENGINEER

STAKING DIAGRAM
BRIDGES OVER MAIN STREET
REDMOND RD. & MAIN ST.
STRS. & APPRS. (JACKSONVILLE) (F)
PULASKI COUNTY

ROUTE 67 SEC. 10

ARKANSAS STATE HIGHWAY COMMISSION

LITTLE ROCK, ARK.

DRAWN BY: LWM DATE: 09-11
CHECKED BY: GS DATE: 03-01-13
DESIGNED BY: LWM DATE: 09-11

FILENAME: b061276m2_15.dgn
SCALE: 1" = 20'

BRIDGE NO. A&B7283 DRAWING NO. 53638

DATE REVISED	DATE FILMED	DATE REVISED	DATE FILMED	FED. ROAD DIST. NO.	STATE	FED. AID PROJ. NO.	SHEET NO.	TOTAL SHEETS
				6	ARK.			
				JOB NO.		061276	235	438
				(1) A&B7283		STAGE CONSTRUCTION		53639

All dimensions are perpendicular to the proposed alignment unless noted otherwise.

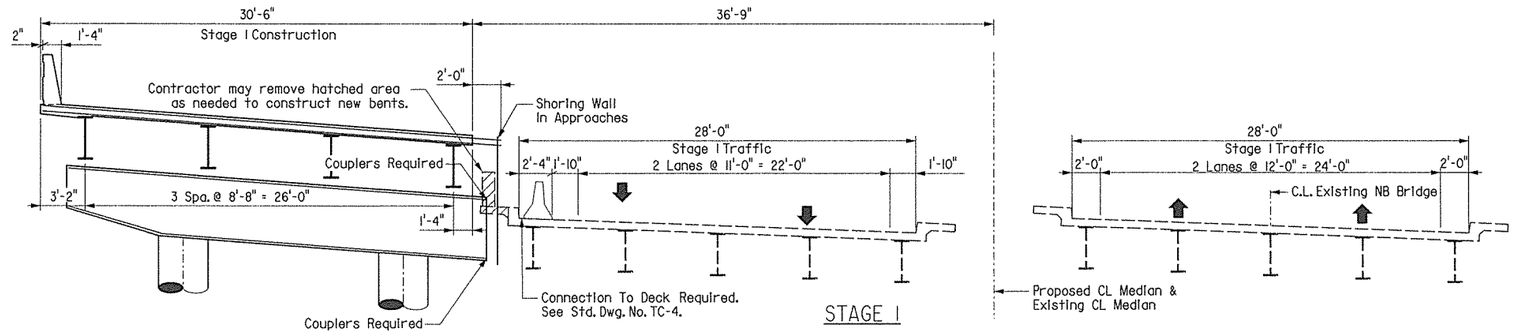

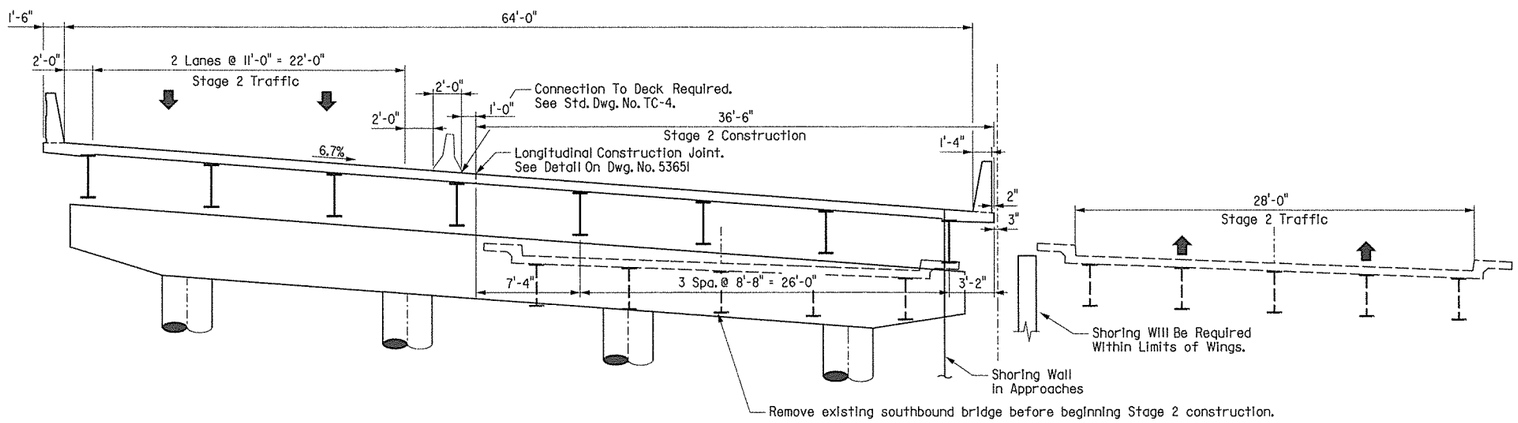

STAGE 2

STATE OF ARKANSAS
LARRY W. MILLER
REGISTERED PROFESSIONAL ENGINEER
No. 11339
8-19-13
BRIDGE ENGINEER

SHEET 1 OF 2
DETAILS OF STAGE CONSTRUCTION
MAIN STREET

ROUTE 67 SEC. 10

ARKANSAS STATE HIGHWAY COMMISSION

LITTLE ROCK, ARK.

DRAWN BY: LWM DATE: 09-11
CHECKED BY: GS DATE: 03-01-13
DESIGNED BY: LWM DATE: 09-11
FILENAME: b061276m2_13.dgn
SCALE: 3/16" = 1'

BRIDGE NO. A&B7283 DRAWING NO. 53639

DATE REVISED	DATE FILMED	DATE REVISED	DATE FILMED	FED. ROAD DIST. NO.	STATE	FED. AID PROJ. NO.	SHEET NO.	TOTAL SHEETS
				6	ARK.			
				JOB NO.		061276	236	438
				① A&B7283		STAGE CONSTRUCTION		53640

All dimensions are perpendicular to the proposed alignment unless noted otherwise.

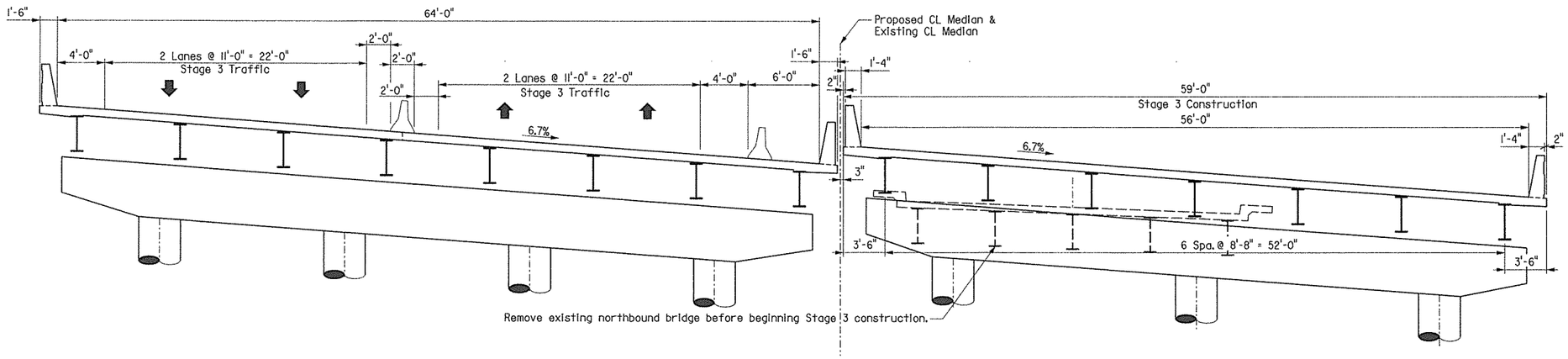

STAGE 3

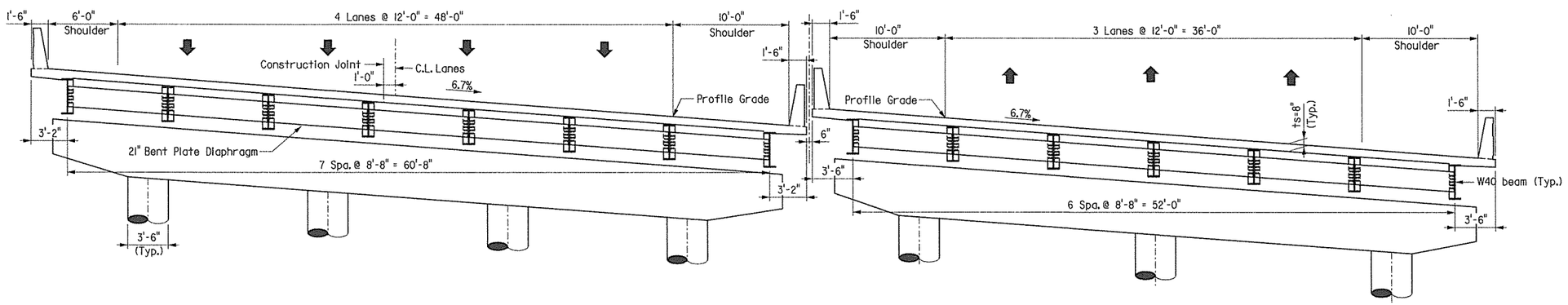

FINAL SECTION

STATE OF ARKANSAS
REGISTERED PROFESSIONAL ENGINEER
No. 11339
8-19-13
LARRY W. MILLER
BRIDGE ENGINEER

SHEET 2 OF 2
DETAILS OF STAGE CONSTRUCTION
MAIN STREET

ROUTE 67 SEC. 10

ARKANSAS STATE HIGHWAY COMMISSION
LITTLE ROCK, ARK.

DRAWN BY: LWM DATE: 09-11
CHECKED BY: GS DATE: 03-01-13
DESIGNED BY: LWM DATE: 09-11
FILENAME: b061276m2_14.dgn
SCALE: 3/16" = 1'

BRIDGE NO. A&B7283 DRAWING NO. 53640

DATE REVISED	DATE FILMED	DATE REVISED	DATE FILMED	FED. ROAD DIST. NO.	STATE	FED. AID PROJ. NO.	SHEET NO.	TOTAL SHEETS
				6	ARK.			
				JOB NO.		061276	237	438
				(1) A7283		END BENT 1 DETAILS		53641

NOTE: Class 1 Protective Surface Treatment shall be applied to the roadway face and top of the end bent rail and the top of the backwall.

* Dimension shown are to C.L. Joint

** Measured Along Gutterline

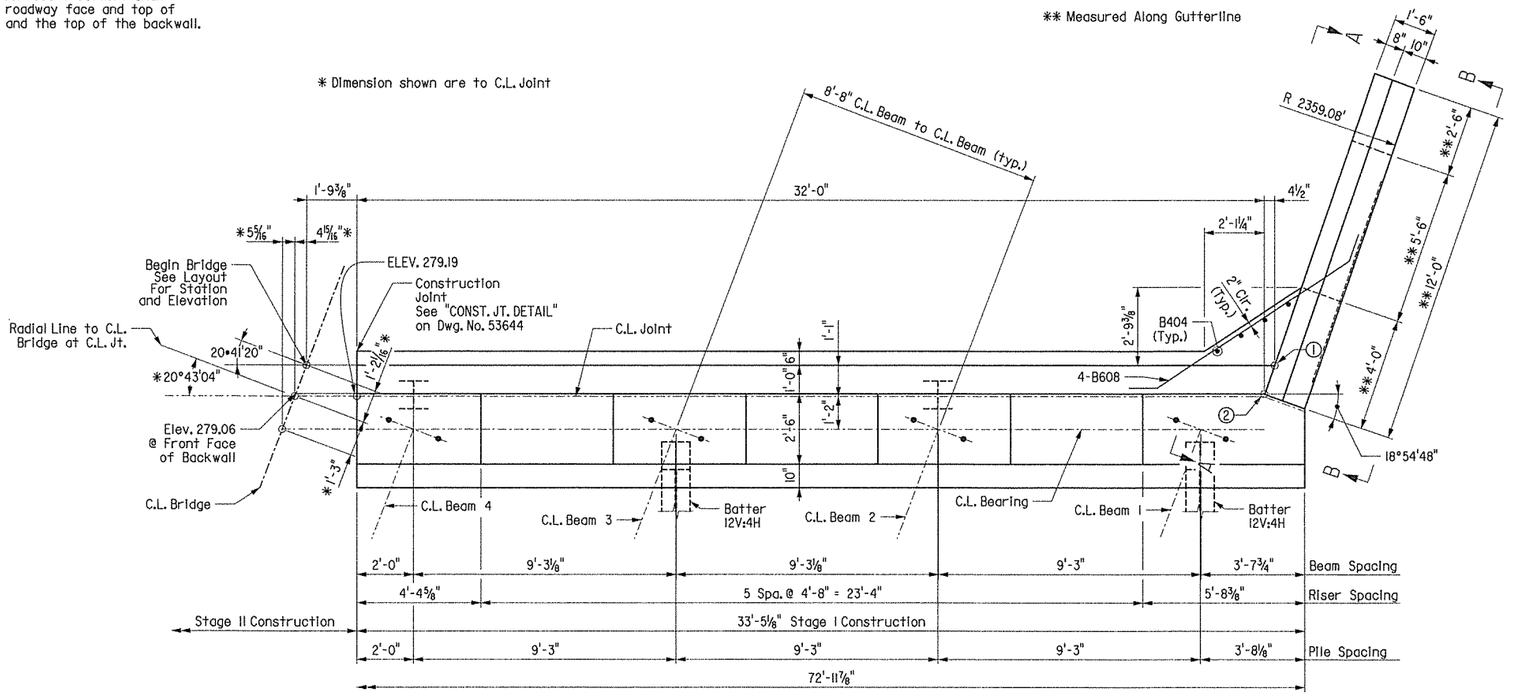

PLAN - STAGE I CONSTRUCTION

Scale: ⅜" = 1'-0"

① Elev. 281.05

② Elev. 281.07

BEAM	"A"
1	20°28'10"
2	20°32'54"
3	20°37'41"
4	20°42'29"
5	20°47'20"
6	20°52'14"
7	20°57'10"
8	21°02'08"

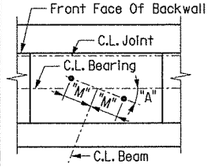

"M" = 1'-1¼"

TYPICAL ANCHOR BOLT LAYOUT

No Scale

③ Adjust spacing of D601E bars as necessary to provide 3" clear from the longitudinal construction joint between the approach slab and gutters.

④ Denotes: Mechanical couplers shall be from the Qualified Products List, shall maintain minimum clearances shown, and their payment is subsidiary to the item "Reinforcing Steel - Bridge (Grade 60)". The couplers shall develop at least 125% of the specified yield strength of the bar.

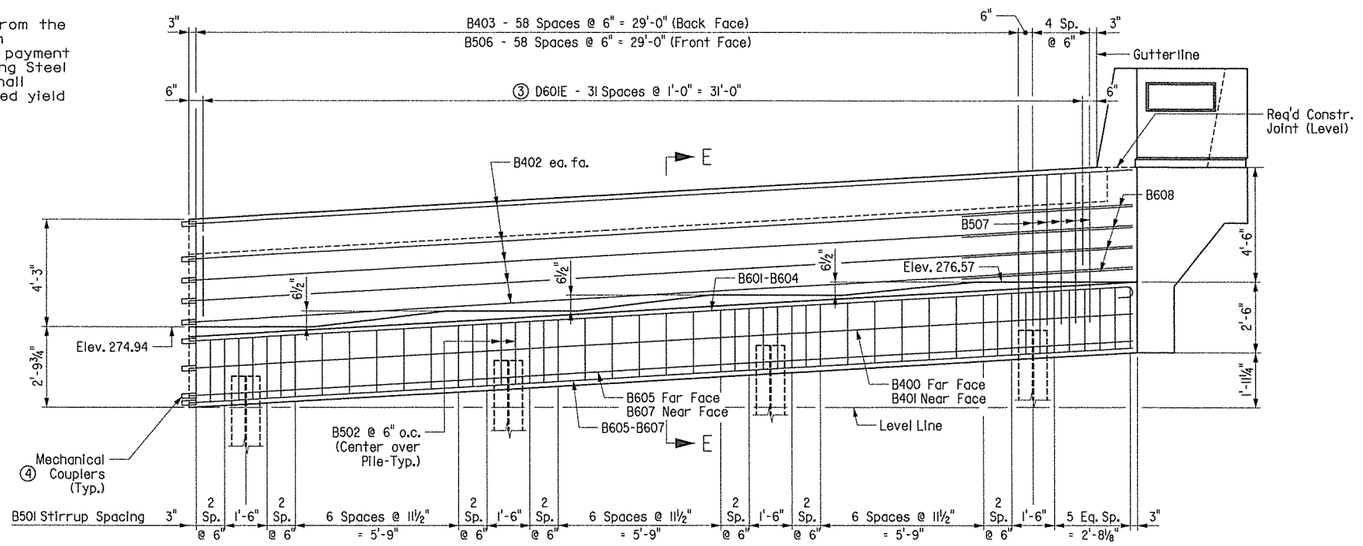

ELEVATION - STAGE I CONSTRUCTION

Scale: ⅜" = 1'-0"

(Looking Back)

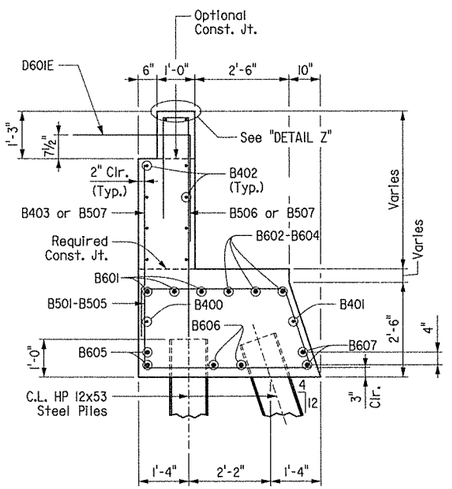

SECTION E-E

Scale: ½" = 1'-0"

For GENERAL NOTES FOR SUBSTRUCTURE, see Dwg. No. 53644.

For VIEW A-A and VIEW B-B, see Dwg. No. 53643.

For "DETAIL Z", see Dwg. No. 53644.

For additional information, see LAYOUT on Dwg. No. 53636.

STATE OF ARKANSAS
REGISTERED PROFESSIONAL ENGINEER
No. 11339
8-19-13
LARRY W. MILLER
BRIDGE ENGINEER

BRIDGE A
SHEET 1 OF 3
DETAILS OF BENT 1
MAIN STREET

ROUTE 67 SEC. 10

ARKANSAS STATE HIGHWAY COMMISSION

LITTLE ROCK, ARK.

DRAWN BY: DLM DATE: 02-13 FILENAME: b061276a2_bll.dgn

CHECKED BY: GS DATE: 03-01-13 SCALE: As Shown

DESIGNED BY: DLM DATE: 02-13

BRIDGE NO. A7283 DRAWING NO. 53641

DATE REVISED	DATE FILMED	DATE REVISED	DATE FILMED	FED. ROAD DIST. NO.	STATE	FED. AID PROJ. NO.	SHEET NO.	TOTAL SHEETS
				6	ARK.			
				JOB NO.		061276	238	438
				① A7283		END BENT 1 DETAILS		53642

NOTE: Class 1 Protective Surface Treatment shall be applied to the roadway face and top of the end bent rail and the top of the backwall.

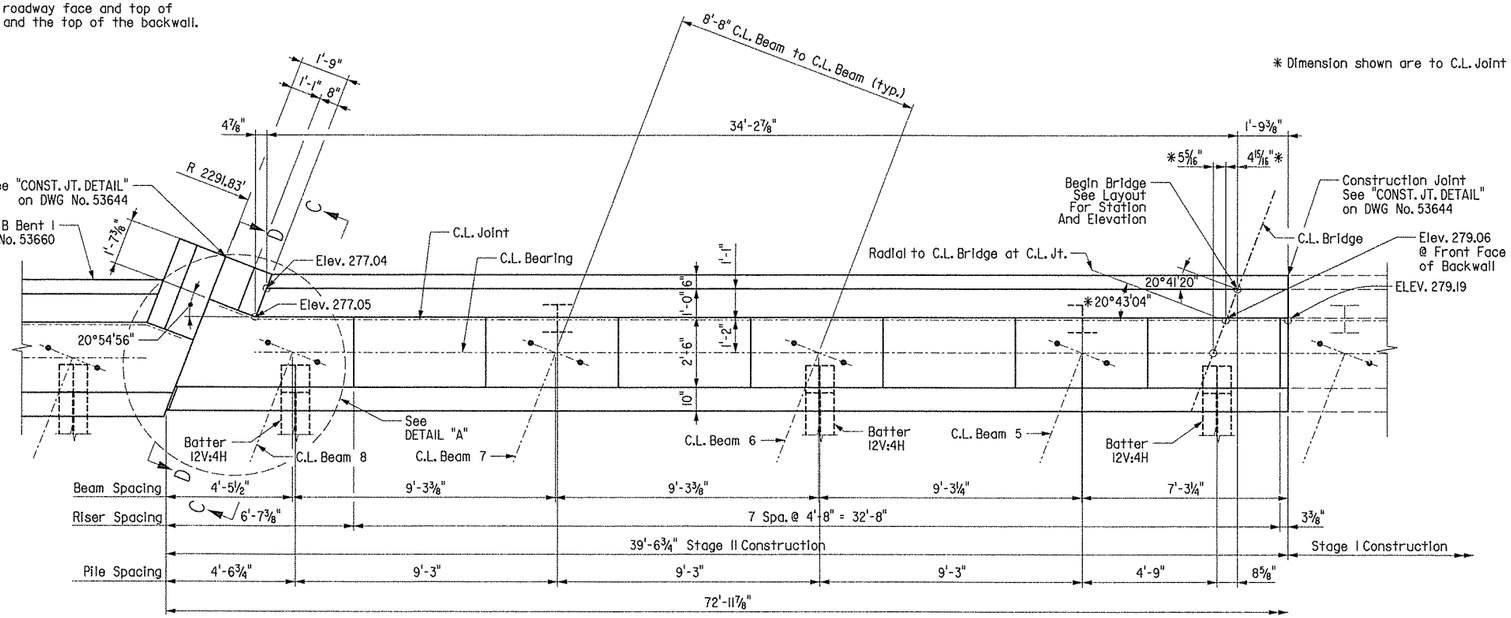

PLAN - STAGE II CONSTRUCTION
Scale: ⅜" = 1'-0"

* Dimension shown are to C.L. Joint

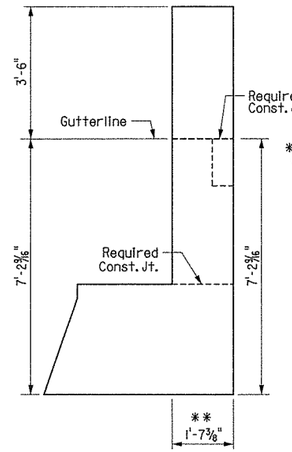

VIEW C-C
Scale: ½" = 1'-0"

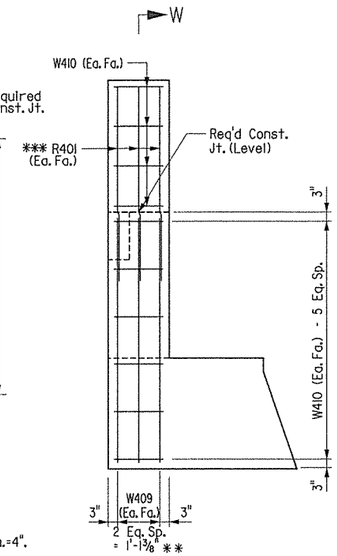

*** Bend R401 in field as necessary to match rail face. Pin dia.=4".

** Measured along gutterline.

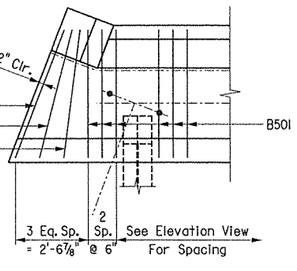

① Adjust spacing of D601E bars as necessary to provide 3" clear from the longitudinal construction joint between the approach slab and gutters.

② Denotes: Mechanical couplers shall be from the Qualified Products List, shall maintain minimum clearances shown, and their payment is subsidiary to the item "Reinforcing Steel - Bridge (Grade 60)". The couplers shall develop at least 125% of the specified yield strength of the bar.

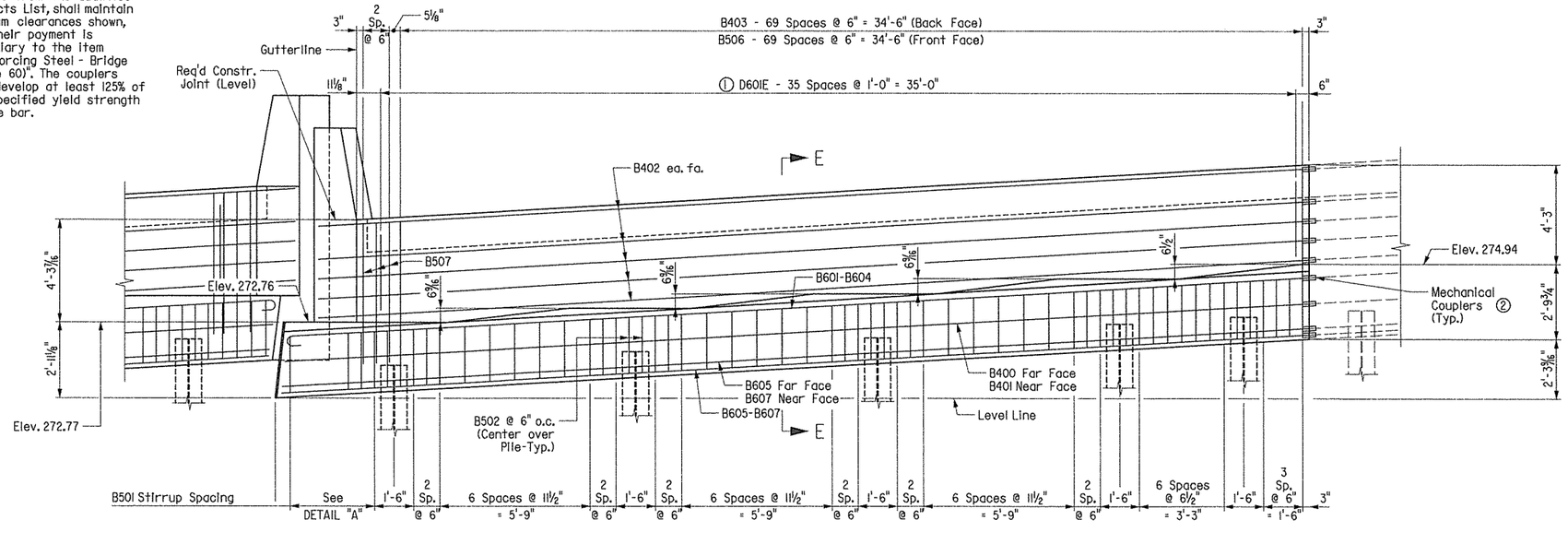

ELEVATION - STAGE II CONSTRUCTION
Scale: ⅜" = 1'-0"
(Looking Back)

DETAIL "A"
Scale: ⅜" = 1'-0"

For GENERAL NOTES FOR SUBSTRUCTURE, see Dwg. No. 53644.

For Section E-E, see Dwg. No. 53641.

For additional information, see LAYOUT on Dwg. No. 53636.

STATE OF ARKANSAS
Larry W. Miller
REGISTERED PROFESSIONAL ENGINEER
No. 11339 8-19-13
LARRY W. MILLER
BRIDGE ENGINEER

BRIDGE A
SHEET 2 OF 3
DETAILS OF BENT 1
MAIN STREET

ROUTE 67 SEC. 10

ARKANSAS STATE HIGHWAY COMMISSION

LITTLE ROCK, ARK.

DRAWN BY: DLM DATE: 02-13
CHECKED BY: GS DATE: 03-01-13
DESIGNED BY: DLM DATE: 02-13

FILENAME: b061276a2_bl2.dgn
SCALE: As Shown

BRIDGE NO. A7283 DRAWING NO. 53642

DATE REVISED	DATE FILMED	DATE REVISED	DATE FILMED	FED. ROAD DIST. NO.	STATE	FED. AID PROJ. NO.	SHEET NO.	TOTAL SHEETS
				6	ARK.			
				JOB NO.		061276	239	438
				(1) A7283		END BENT 1 DETAILS		53643

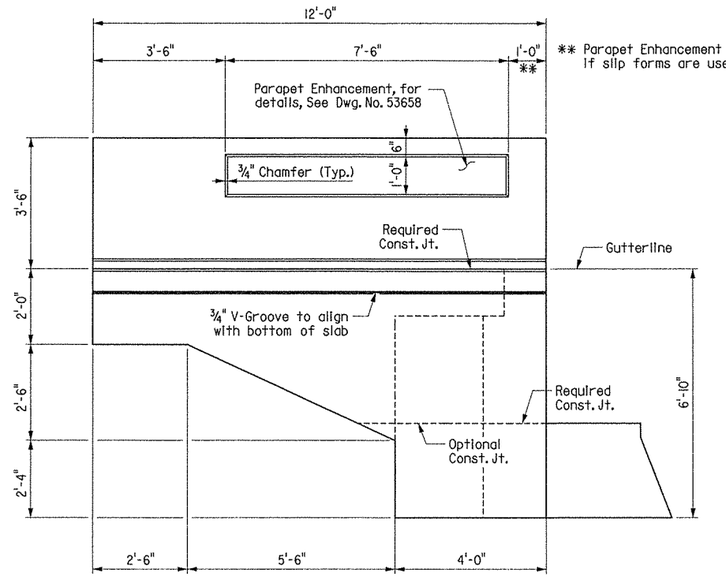

VIEW A-A

Scale: ½" = 1'-0"

*** Bend R401 in field as necessary to match rail line. Pin dia.=4".

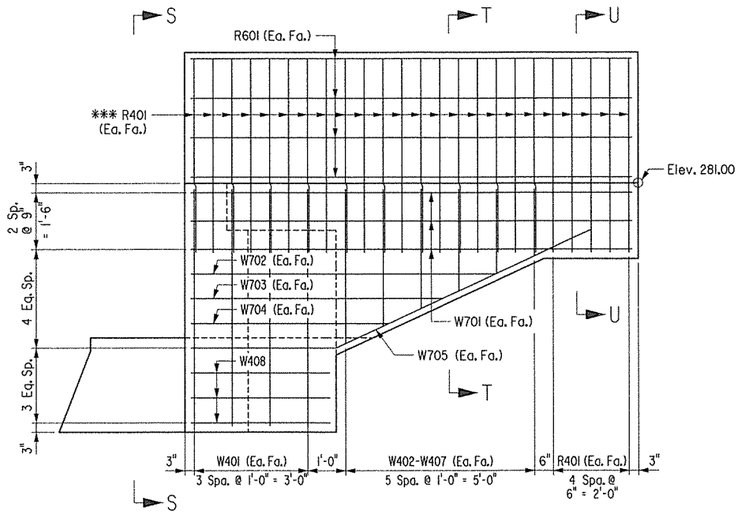

VIEW B-B

Scale: ½" = 1'-0"

NOTE: Bars designated with an "E" suffix shall be epoxy coated.

BAR LIST - BENT 1

Mark	No. Req'd	Length	"A"	Pin Dia.
B400	1	71'-6"	71'-6"	Str.
B401	1	72'-6"	72'-6"	Str.
B402	10	71'-4"	68'-5"	2"
B403	129	4'-6"	---	Str.
B404	4	5'-5"	---	Str.
B501	89	13'-1"	---	2½"
B502	18	8'-1"	---	2½"
B503	1	14'-1"	---	2½"
B504	1	13'-8"	---	2½"
B505	1	13'-3"	---	2½"
B506	129	8'-6"	---	2½"
B507	8	11'-11"	---	2½"
B600	18	2'-10"	---	4½"
B601	3	72'-10"	71'-6"	4½"
B602 to B604	1 ea.	73'-0" to 73'-10"	71'-8" to 72'-6"	4½"
B605	2	71'-6"	71'-6"	Str.
B606	2	71'-7"	71'-7"	Str.
B607	2	72'-6"	72'-6"	Str.
B608	4	10'-1"	---	4½"
D601E	68	5'-9"	---	4½"
R401	54	5'-3"	---	Str.
R601	8	11'-8"	---	Str.
W401	8	6'-3"	---	Str.
W402 to W407	2 ea.	4'-1" to 1'-9"	---	Str.
W408	3	11'-7"	---	2"
W409	6	6'-5"	---	Str.
W410	14	1'-3"	---	Str.
W701	6	11'-8"	---	Str.
W702	2	8'-1"	---	Str.
W703	2	6'-8"	---	Str.
W704	2	5'-3"	---	Str.
W705	2	11'-3"	---	2"

BENDING DIAGRAMS
(Dimensions are out to out of bars)

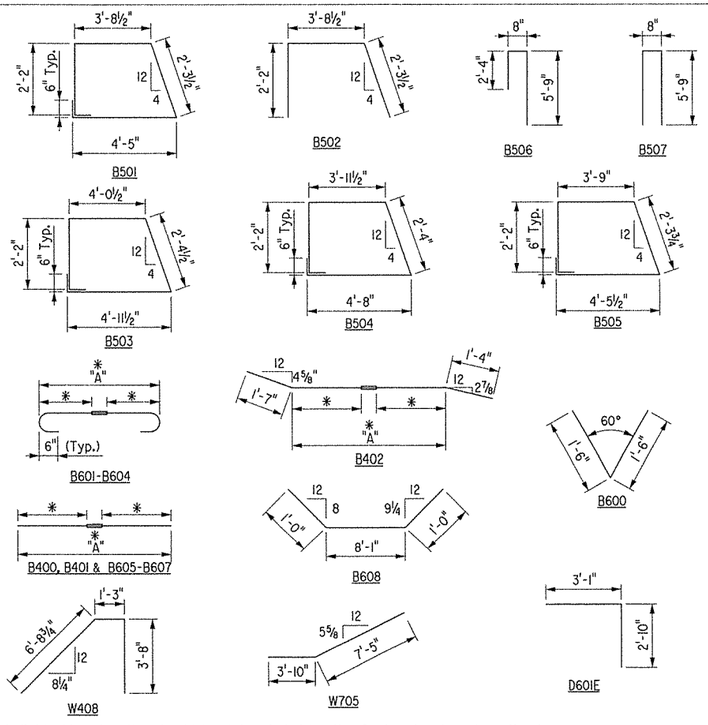

* Individual bar lengths should be determinded by the Contractor based on the type of mechanical coupler used.

STATE OF ARKANSAS
REGISTERED PROFESSIONAL ENGINEER
No. 11339
LARRY W. MILLER
8-19-13
BRIDGE ENGINEER

BRIDGE A
SHEET 3 OF 3
DETAILS OF BENT 1
MAIN STREET

ROUTE 67 SEC. 10

ARKANSAS STATE HIGHWAY COMMISSION

LITTLE ROCK, ARK.

DRAWN BY: DLM DATE: 02-13
CHECKED BY: GS DATE: 03-01-13
DESIGNED BY: DLM DATE: 02-13
FILENAME: b061276a2_bl3.dgn
SCALE: As Shown

BRIDGE NO. A7283 DRAWING NO. 53643

DATE REVISED	DATE FILMED	DATE REVISED	DATE FILMED	FED. ROAD DIST. NO.	STATE	FED. AID PROJ. NO.	SHEET NO.	TOTAL SHEETS
				6	ARK.			
				JOB NO.		061276	240	438
				(1) A7283		END BENT DETAILS		53644

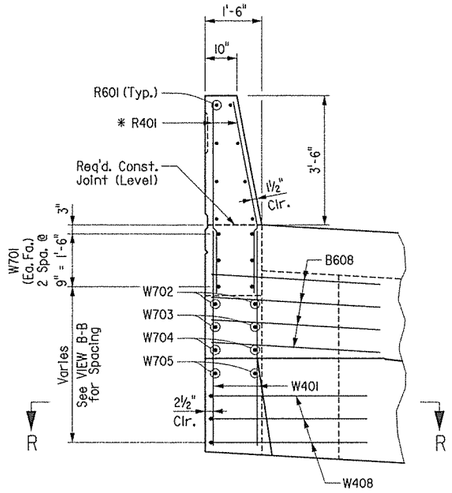

Bent 4 is shown.
Bent 1 is opposite hand.

VIEW S-S

Scale: ½" = 1'-0"

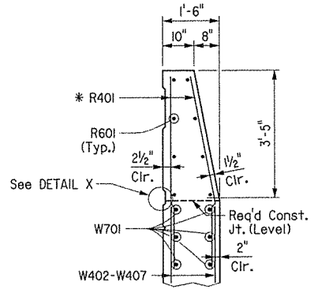

SECTION T-T

Scale: ½" = 1'-0"

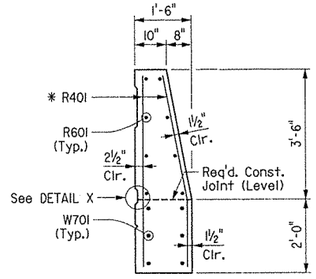

SECTION U-U

Scale: ½" = 1'-0"

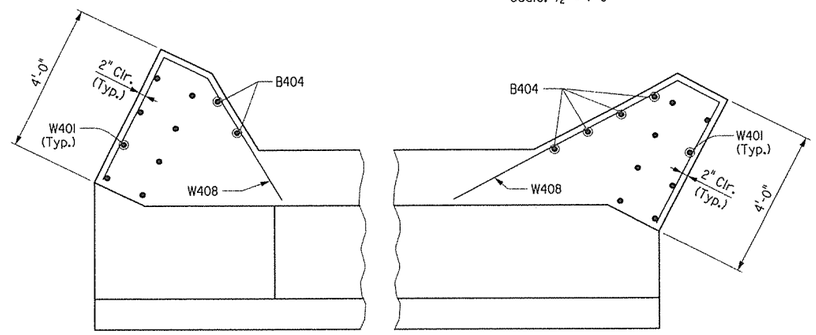

SECTION R-R

Scale: ½" = 1'-0"

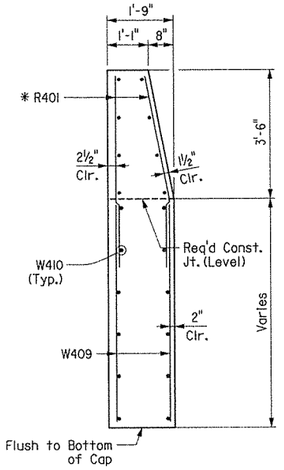

SECTION W-W

Scale: ½" = 1'-0"

GENERAL NOTES FOR SUBSTRUCTURE

All concrete shall be Class "S" with a minimum 28 day compressive strength f'c = 3,500 psi and shall be poured in the dry. All exposed corners to be chamfered ¾" unless otherwise noted.

All structural steel shall be AASHTO M 270, Grade 50 unless otherwise noted and shall be paid for as "STRUCTURAL STEEL IN BEAM SPANS (M 270, GR. 50)". All exposed surfaces shall be cleaned and painted in accordance with Section 807 and will be paid for under the pay item "PAINTING STRUCTURAL STEEL". The color of paint shall be Aluminum and shall match Fed. Std. 595B, Color Chip No. 37200.

All reinforcing steel shall conform to AASHTO M 31 or M322 Type A, Grade 60 (yield strength = 60,000 psi).

The backwall above the required construction joint shall not be poured until the beams are in place. Backwall may be placed prior to placing the adjacent concrete deck only if the optional backwall construction joint is used. See "DETAILS FOR BLOCKING EXPANSION JOINT DEVICE" on Dwg. No. 53672 for additional information.

Top reinforcing bars in cap shall be properly placed to avoid interference with anchor bolts or sheet metal sleeves.

* Bend R401 in field as necessary to match rail face. Pin dia.=4".

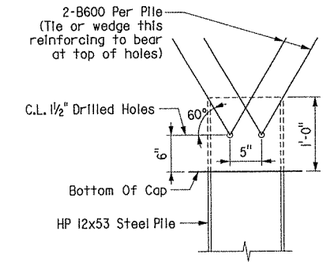

DETAIL AT PILE TOP

No Scale

Drilled holes will not be paid for directly but shall be considered incidental to the item "STEEL PILING (HP12x53)".

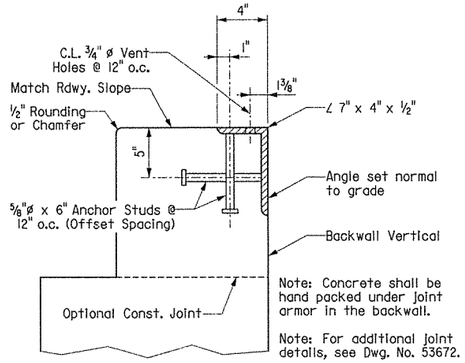

DETAIL Z

Scale: 2" = 1'-0"

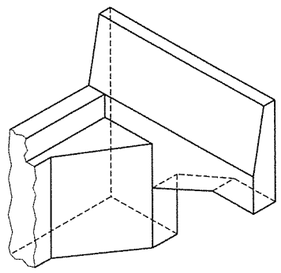

THREE DIMENSIONAL VIEW OF WING & RAIL

No Scale

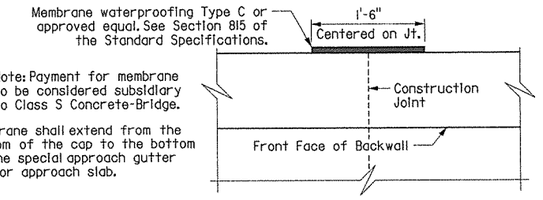

CONST. JOINT DETAIL

No Scale

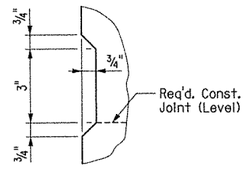

DETAIL X

Scale: 3" = 1'-0"

STATE OF ARKANSAS
LARRY W. MILLER
REGISTERED PROFESSIONAL ENGINEER
No. 13339
3-24-14

BRIDGE ENGINEER

BRIDGE A
COMMON END BENT DETAILS
MAIN STREET

ROUTE 67 SEC. 10

ARKANSAS STATE HIGHWAY COMMISSION

LITTLE ROCK, ARK.

DRAWN BY: DLM DATE: 02-13 FILENAME: b061276a2_bl4.dgn
CHECKED BY: GS DATE: 03-01-13 SCALE: As Shown
DESIGNED BY: DLM DATE: 02-13

BRIDGE NO. A7283 DRAWING NO. 53644

DATE REVISED	DATE FILMED	DATE REVISED	DATE FILMED	FED. ROAD DIST. NO.	STATE	FED. AID PROJ. NO.	SHEET NO.	TOTAL SHEETS
				6	ARK.			
				JOB NO.		061276	241	438
				(1) A7283		INTERIOR BENT DETAILS		53645

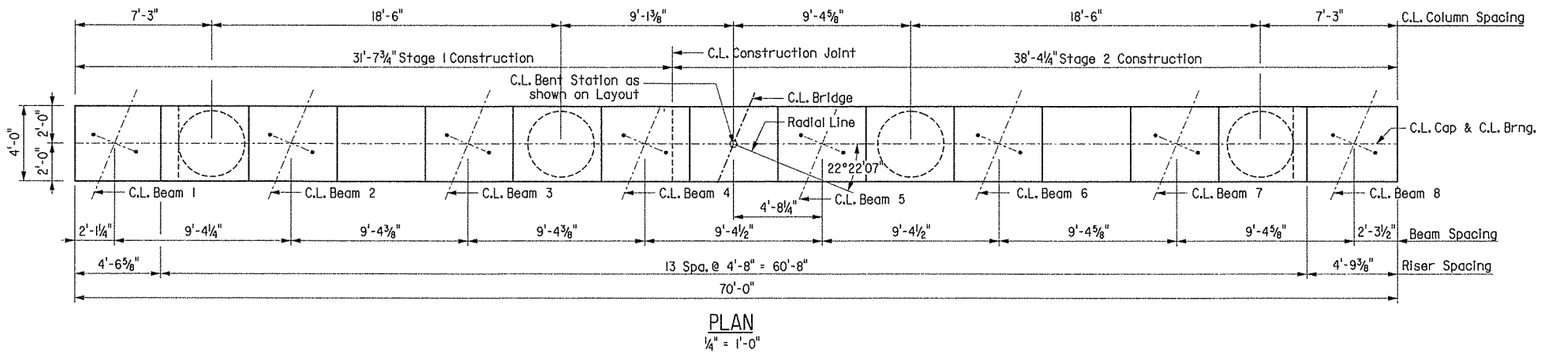

PLAN
¼" = 1'-0"

BEAM	"A"
1	22°03'55"
2	22°09'04"
3	22°14'15"
4	22°19'29"
5	22°24'45"
6	22°30'04"
7	22°35'26"
8	22°40'50"

"M" = 15½"

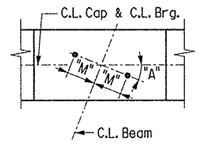

TYPICAL ANCHOR BOLT LAYOUT
No Scale

Minimum Lap Splice Lengths:
#8 Bar: 4'-9"
#6 Bar: 3'-7"

Lapped splices will not be permitted for the longitudinal column reinforcing. The Contractor may submit a request to the Engineer for approval to use mechanical couplers at mid-height of the column. All work and materials to use mechanical couplers will not be paid for directly but will be considered subsidiary to the item "Reinforcing Steel - Bridge (Grade 60)".

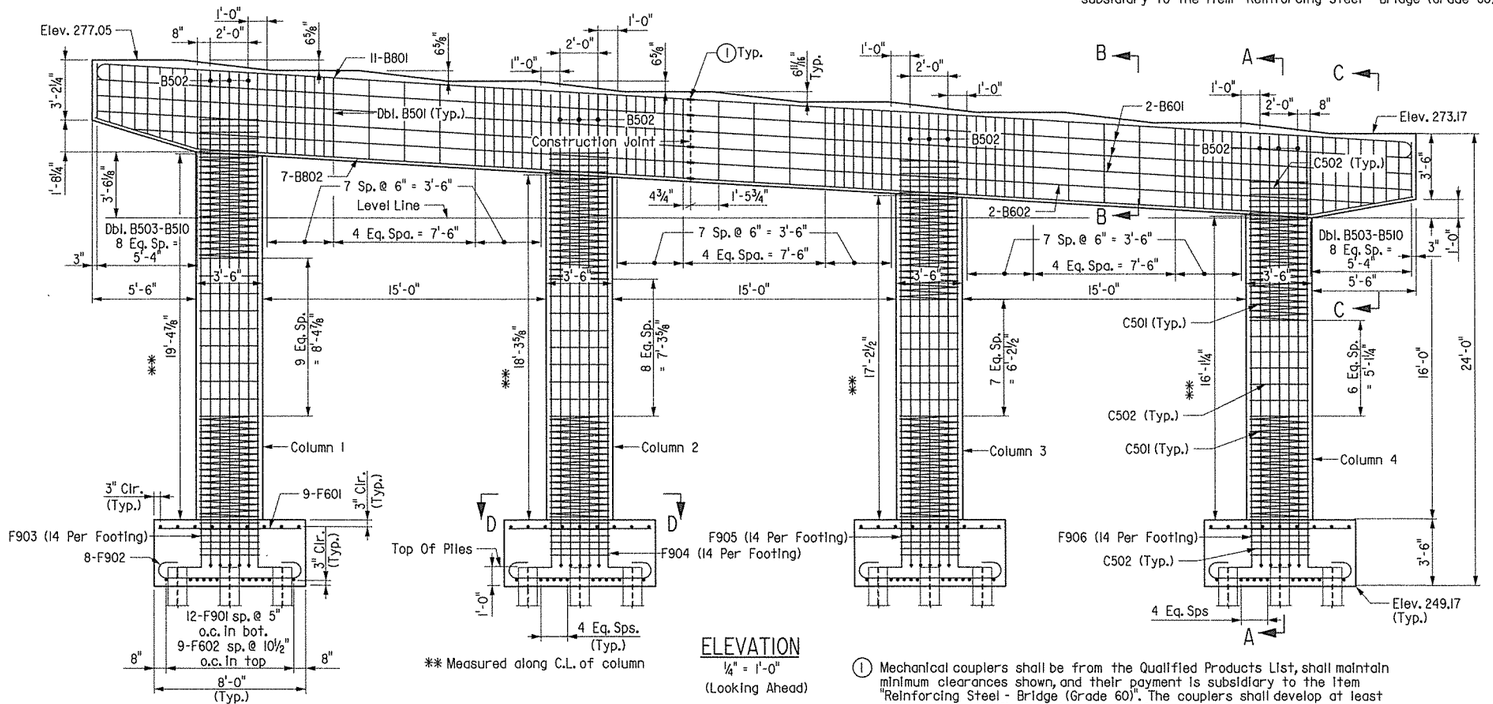

** Measured along C.L. of column

ELEVATION
¼" = 1'-0"
(Looking Ahead)

For sections, detail at pile top and footing plan, see Dwg. No. 53647.

For substructure general notes, see Dwg. No. 53644.

BAR LIST

Mark	Number Required	Dim. "A"	Length	Pin Dia.
B501	114	---	13'-7"	2½"
B502	12	---	11'-10"	2½"
B503 to B511	4 ea.	---	11'-1" to 13'-7"	2½"
B601	6	69'-7"	69'-7"	Str.
B602	2	68'-9"	68'-9"	Str.
B801	11	---	71'-5"	6"
B802	7	---	70'-1"	6"
C501	8	---	183'-8"	3"
C502	87	---	12'-2"	3"
F601	36	---	7'-6"	Str.
F602	36	---	9'-6"	Str.
F603	48	---	2'-10"	4½"
F901	48	9'-6"	12'-0"	9"
F902	32	7'-6"	10'-0"	9"
F903	14	26'-2"	27'-6"	9"
F904	14	25'-0"	26'-4"	9"
F905	14	24'-0"	25'-4"	9"
F906	14	22'-10"	24'-2"	9"

Bending Diagrams
(Dimensions are out to out of bars.)

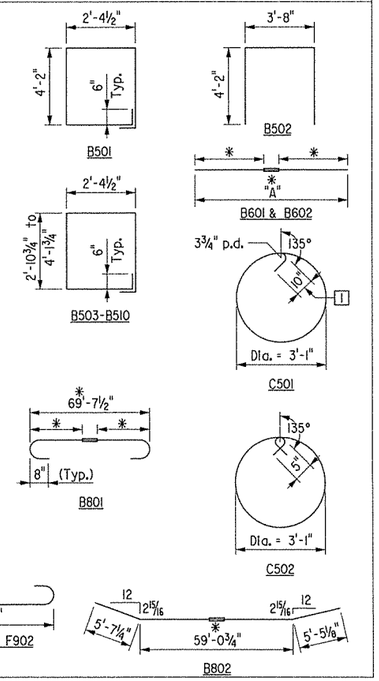

(1) At each end of spiral. Hook may be field bent around a vertical bar.

* Individual bar lengths should be determinded by the Contractor based on the type of mechanical coupler used.

(1) Mechanical couplers shall be from the Qualified Products List, shall maintain minimum clearances shown, and their payment is subsidiary to the item "Reinforcing Steel - Bridge (Grade 60)". The couplers shall develop at least 125% of the specified yield strength of the bar.

STATE OF ARKANSAS
LARRY W. MILLER
REGISTERED PROFESSIONAL ENGINEER
No. 11339
8-19-13
BRIDGE ENGINEER

BRIDGE A
DETAILS OF BENT 2
MAIN STREET

ROUTE 67 SEC. 10

ARKANSAS STATE HIGHWAY COMMISSION
LITTLE ROCK, ARK.

DRAWN BY: AM DATE: 02-13
CHECKED BY: GS DATE: 03-01-13
DESIGNED BY: LM DATE: 01-13
FILENAME: b061276a2_b2.dgn
SCALE: As Shown

BRIDGE NO. A7283 DRAWING NO. 53645

DATE REVISED	DATE FILMED	DATE REVISED	DATE FILMED	FED. ROAD DIST. NO.	STATE	FED. AID PROJ. NO.	SHEET NO.	TOTAL SHEETS
				6	ARK.			
				JOB NO.		061276	242	438
				(1) A7283		INTERIOR BENT DETAILS		53646

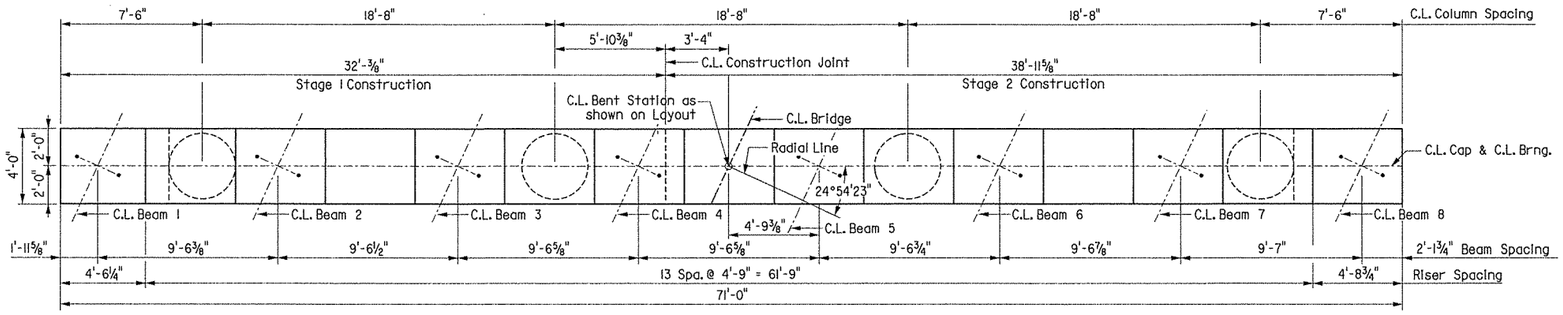

PLAN
¼" = 1'-0"

BEAM	"A"
1	24°33'51"
2	24°39'40"
3	24°45'31"
4	24°51'25"
5	24°57'21"
6	25°03'21"
7	25°09'24"
8	25°15'30"

"M" = 15½"

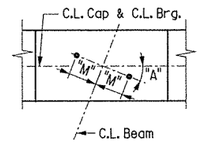

TYPICAL ANCHOR BOLT LAYOUT
No Scale

Minimum Lap Splice Lengths:
#8 Bar: 4'-9"
#6 Bar: 3'-7"

Lapped splices will not be permitted for the longitudinal column reinforcing. The Contractor may submit a request to the Engineer for approval to use mechanical couplers at mid-height of the column. All work and materials to use mechanical couplers will not be paid for directly but will be considered subsidiary to the item "Reinforcing Steel - Bridge (Grade 60)".

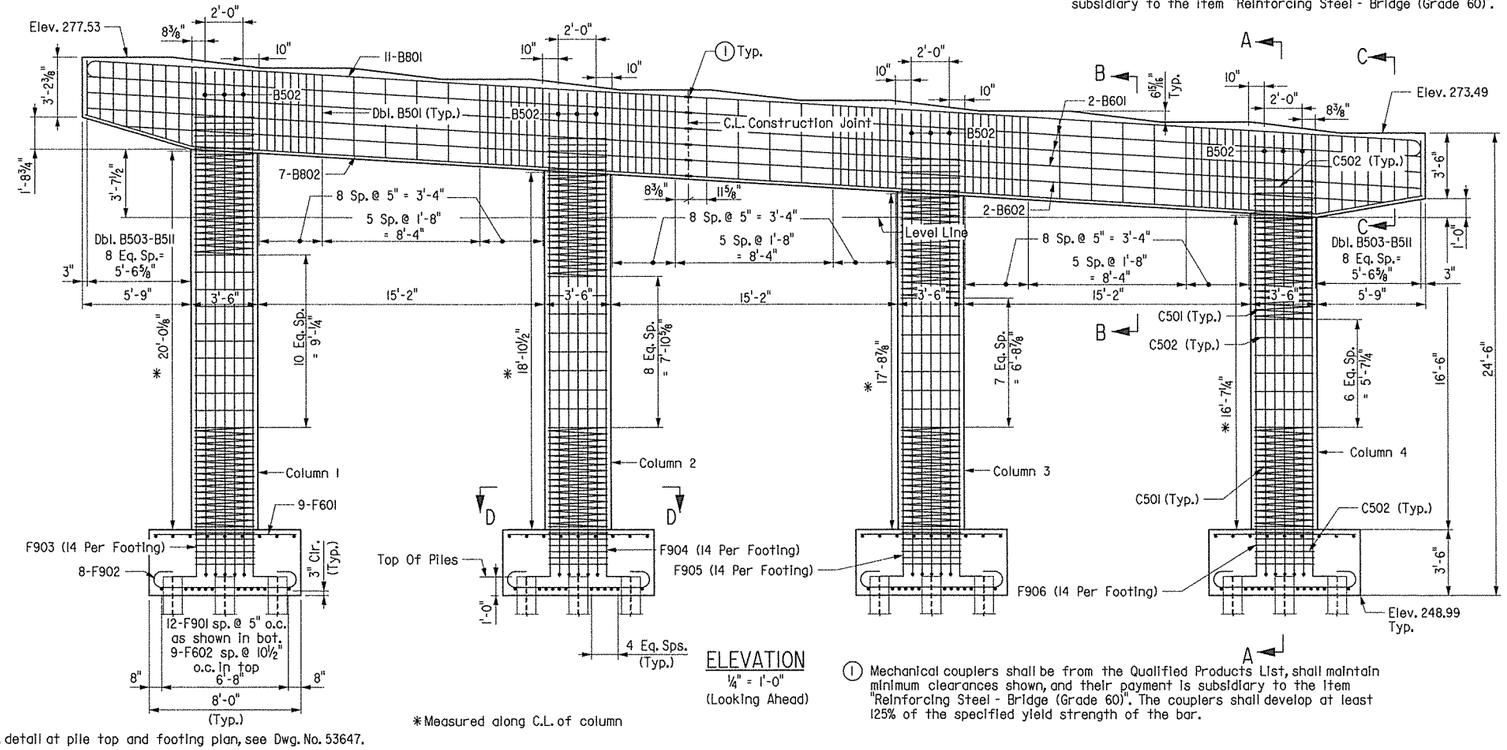

ELEVATION
¼" = 1'-0"
(Looking Ahead)

*Measured along C.L. of column

For sections, detail at pile top and footing plan, see Dwg. No. 53647.
For substructure general notes, see Dwg. No. 53644.

(1) Mechanical couplers shall be from the Qualified Products List, shall maintain minimum clearances shown, and their payment is subsidiary to the item "Reinforcing Steel - Bridge (Grade 60)". The couplers shall develop at least 125% of the specified yield strength of the bar.

BAR LIST

Mark	Number Required	Dim. "A"	Length	Pin Dia.
B501	132	---	13'-7"	2½"
B502	12	---	11'-10"	2½"
B503 to B511	4 ea.	---	11'-1" to 13'-7"	2½"
B601	6	70'-7"	70'-7"	Str.
B602	2	69'-9"	69'-9"	Str.
B801	11	---	72'-5"	6"
B802	7	---	71'-1"	6"
C501	8	---	183'-8"	3"
C502	92	---	12'-2"	3"
F601	36	---	7'-6"	Str.
F602	36	---	9'-6"	Str.
F603	48	---	2'-10"	4½"
F901	48	9'-6"	12'-0"	9"
F902	32	7'-6"	10'-0"	9"
F903	14	26'-9"	28'-1"	9"
F904	14	25'-8"	27'-0"	9"
F905	14	24'-6"	25'-10"	9"
F906	14	23'-4"	24'-8"	9"

Bending Diagrams (Dimensions are out to out of bars.)

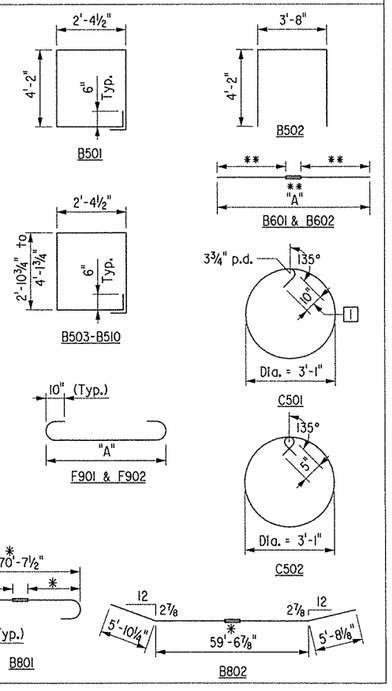

1 At each end of spiral. Hook may be field bent around a vertical bar.

** Individual bar lengths should be determinded by the Contractor based on the type of mechanical coupler used.

STATE OF ARKANSAS
REGISTERED PROFESSIONAL ENGINEER
No. 11339
8-19-13
LARRY W. MILLER
BRIDGE ENGINEER

BRIDGE A
DETAILS OF BENT 3
MAIN STREET

ROUTE 67 SEC. 10

ARKANSAS STATE HIGHWAY COMMISSION
LITTLE ROCK, ARK.

DRAWN BY: AM DATE: 02-13 FILENAME: b061276a2_b3l.dgn
CHECKED BY: GS DATE: 03-01-13 SCALE: As Shown
DESIGNED BY: LM DATE: 01-13

BRIDGE NO. A7283 DRAWING NO. 53646

DATE REVISED	DATE FILMED	DATE REVISED	DATE FILMED	FED. ROAD DIST. NO.	STATE	FED. AID PROJ. NO.	SHEET NO.	TOTAL SHEETS
				6	ARK.			
				JOB NO.		061276	243	438
				(1) A7283				53647

NOTES FOR SPIRAL REINFORCING

Spiral reinforcing shall be plain round or deformed steel bars meeting the requirements of AASHTO M31 or M322 Type A (Grade 60) or shall be cold drawn wire meeting the requirements of AASHTO M32 or M225 (Grade 70) with a minimum diameter of 0.625".

Spiral reinforcement shall be paid for at the contract unit price bid per pound for "Reinforcing Steel-Bridge (Grade 60)". No additional payment shall be made for spacers, additional splices, or bracing needed for assembly, shipping, handling, or erecting.

Ends of spirals shall be terminated with 1½ turns and a 135° hook with a 10" tall around a vertical bar.

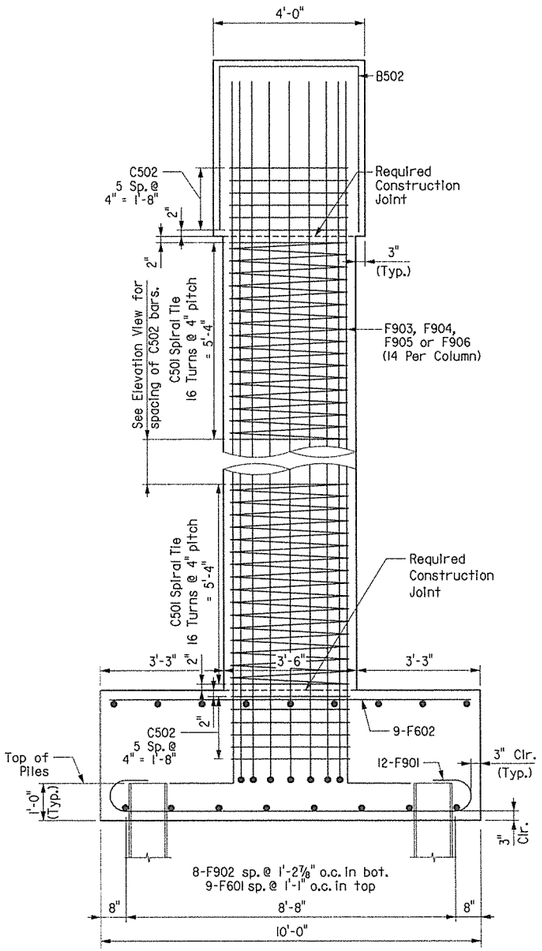

SECTION A-A

½" = 1'-0"

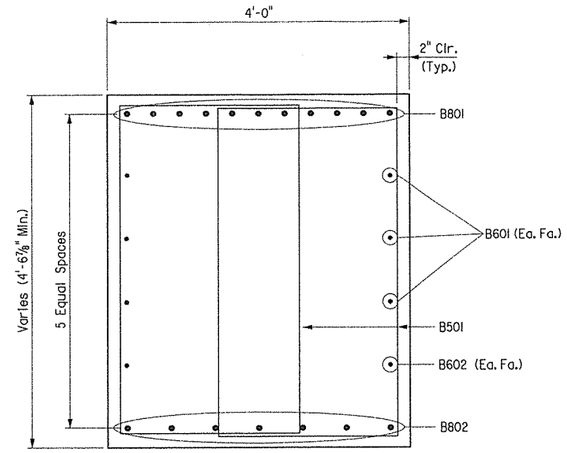

SECTION B-B

1" = 1'-0"

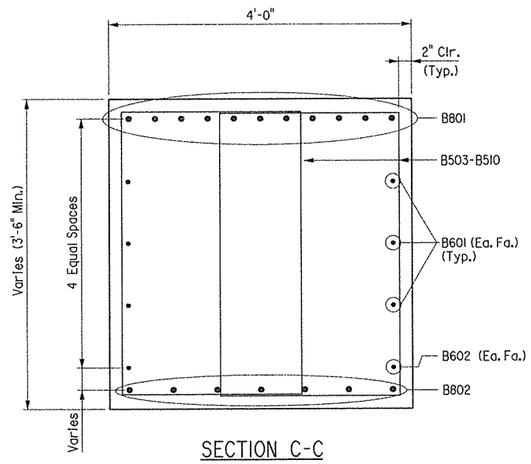

SECTION C-C

1" = 1'-0"

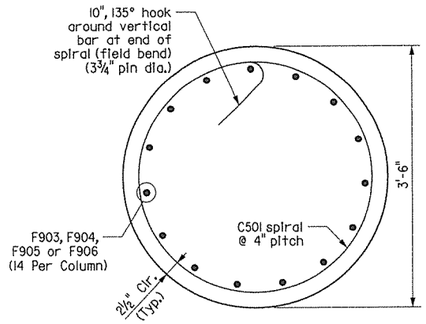

SECTION D-D

1" = 1'-0"

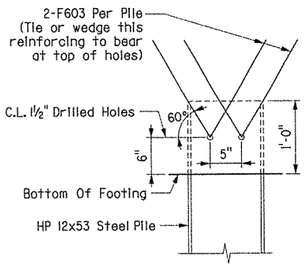

DETAIL AT PILE TOP

No Scale

Drilled holes will not be paid for directly but shall be considered incidental to the item "STEEL PILING (HP12x53)".

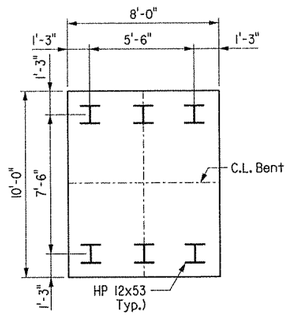

FOOTING PLAN

¼" = 1'-0"

STATE OF ARKANSAS
LARRY W. MILLER
REGISTERED PROFESSIONAL ENGINEER
No. 11339
3-24-14

BRIDGE ENGINEER

BRIDGE A
COMMON INTERIOR BENT DETAILS
MAIN STREET

ROUTE 67 SEC. 10

ARKANSAS STATE HIGHWAY COMMISSION

LITTLE ROCK, ARK.

DRAWN BY: AM DATE: 02-13 FILENAME: b061276a2_b32.dgn

CHECKED BY: GS DATE: 03-01-13 SCALE: As Shown

DESIGNED BY: LM DATE: 01-13

BRIDGE NO. A7283 DRAWING NO. 53647

DATE REVISED	DATE FILMED	DATE REVISED	DATE FILMED	FED. ROAD DIST. NO.	STATE	FED. AID PROJ. NO.	SHEET NO.	TOTAL SHEETS
				6	ARK.			
				JOB NO.		061276	244	438
				① A7283		END BENT 4 DETAILS		53648

** Measured Along Gutterline

NOTE: Class I Protective Surface Treatment shall be applied to the roadway face and top of the end bent rail and the top of the backwall.

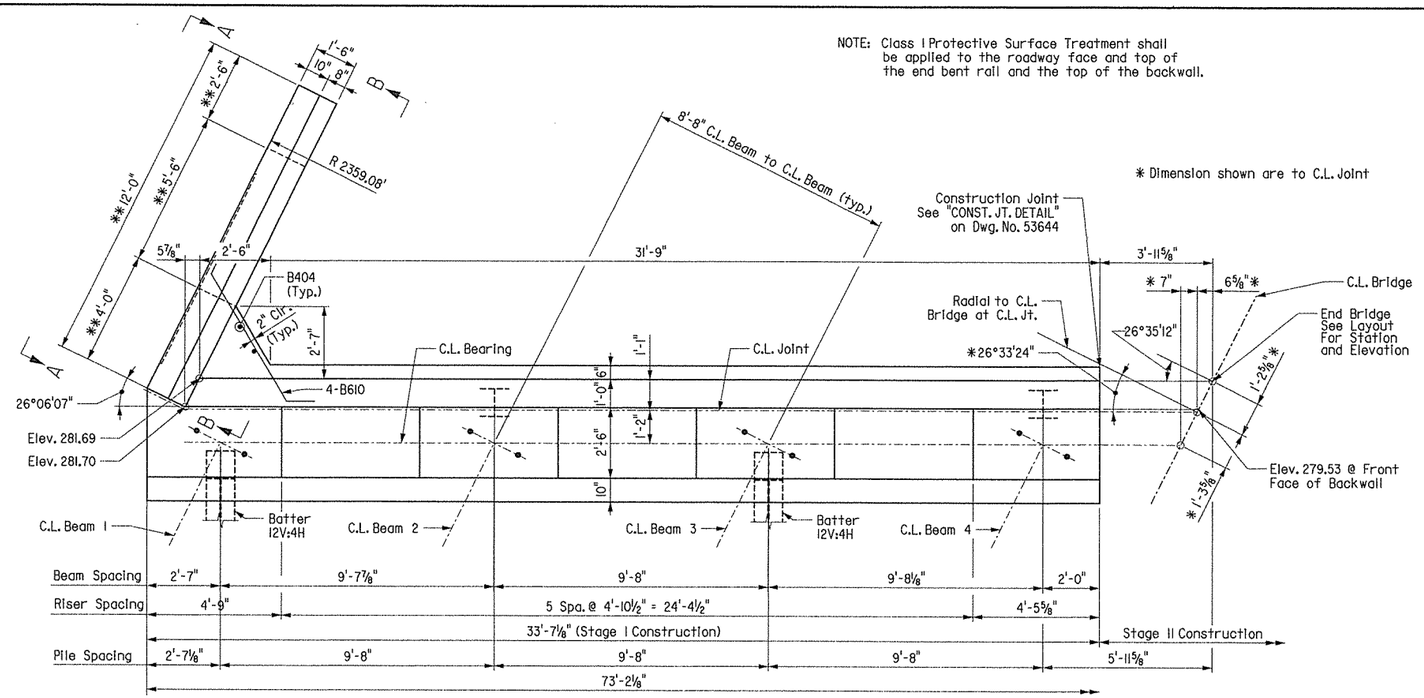

PLAN - STAGE I CONSTRUCTION

Scale: ⅜" = 1'-0"

BEAM	"A"
1	26°09'25"
2	26°15'40"
3	26°21'57"
4	26°28'17"
5	26°34'41"
6	26°41'08"
7	26°47'38"
8	26°54'11"

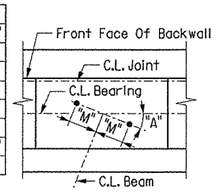

TYPICAL ANCHOR BOLT LAYOUT

① Adjust spacing of D601E bars as necessary to provide 3" clear from the longitudinal construction joint between the approach slab and gutters.

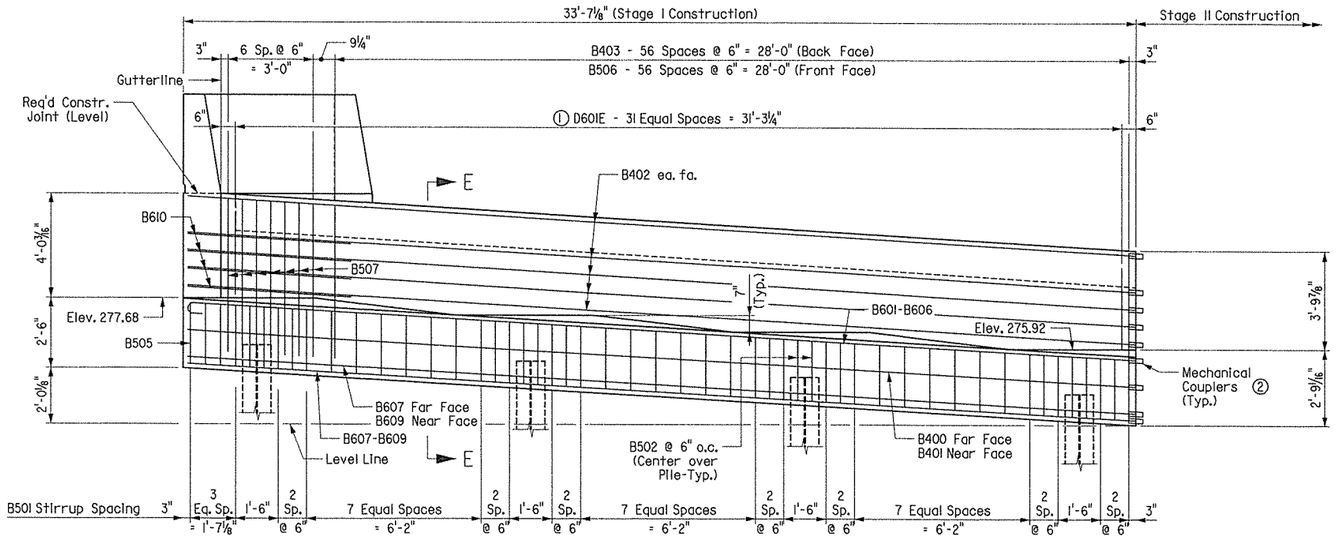

ELEVATION - STAGE I CONSTRUCTION

Scale: ⅜" = 1'-0"
(Looking Ahead)

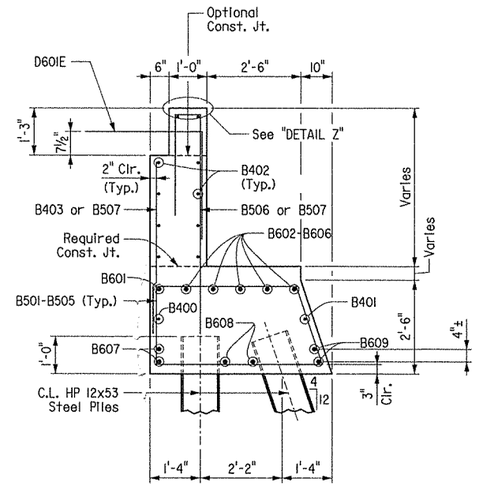

SECTION E-E

Scale: ½" = 1'-0"

② Denotes: Mechanical couplers shall be from the Qualified Products List, shall maintain minimum clearances shown, and their payment is subsidiary to the item "Reinforcing Steel - Bridge (Grade 60)". The couplers shall develop at least 125% of the specified yield strength of the bar.

For GENERAL NOTES FOR SUBSTRUCTURE, see Dwg. No. 53644.

For VIEW A-A and VIEW B-B, see Dwg. No. 53650.

For "DETAIL Z", see Dwg. No. 53644.

For additional information, see LAYOUT on Dwg. No. 53636.

STATE OF ARKANSAS
Larry W. Miller
REGISTERED PROFESSIONAL ENGINEER
No. 11339 8-19-13
LARRY W. MILLER

BRIDGE ENGINEER

BRIDGE A
SHEET 1 OF 3
DETAILS OF BENT 4
MAIN STREET

ROUTE 67 SEC. 10

ARKANSAS STATE HIGHWAY COMMISSION

LITTLE ROCK, ARK.

DRAWN BY: DLM DATE: 02-13
CHECKED BY: GS DATE: 03-01-13
DESIGNED BY: DLM DATE: 02-13

FILENAME: b061276a2_b41.dgn
SCALE: As Shown

BRIDGE NO. A7283 DRAWING NO. 53648

DATE REVISED	DATE FILMED	DATE REVISED	DATE FILMED	FED. ROAD DIST. NO.	STATE	FED. AID PROJ. NO.	SHEET NO.	TOTAL SHEETS
				6	ARK.			
				JOB NO.		061276	245	438
				(1) A7283		END BENT 4 DETAILS		53649

NOTE: Class I Protective Surface Treatment shall be applied to the roadway face and top of the end bent rail and the top of the backwall.

For GENERAL NOTES FOR SUBSTRUCTURE, see Dwg. No. 53644.

For VIEW C-C and VIEW D-D, see Dwg. No. 53650.

For additional information, see LAYOUT on Dwg. No. 53636.

* Dimension shown are to C.L. Joint

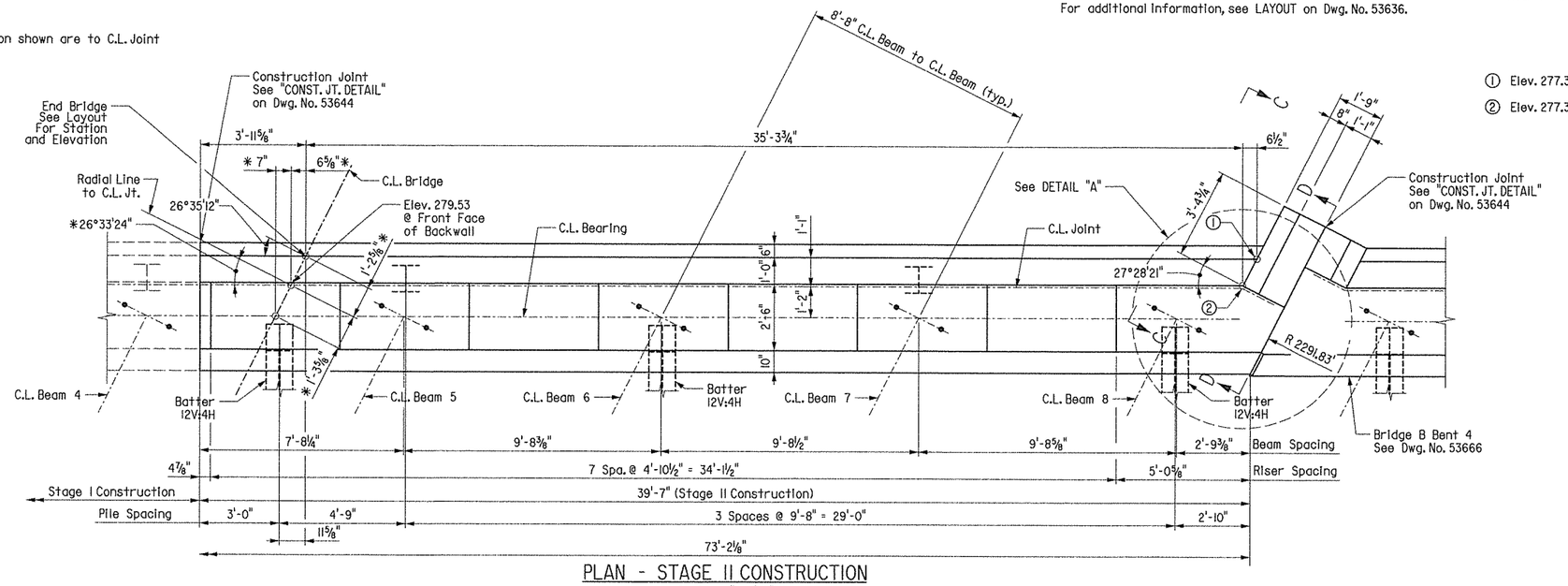

PLAN - STAGE II CONSTRUCTION

Scale: ⅜" = 1'-0"

① Elev. 277.37

② Elev. 277.38

③ Adjust spacing of D60IE bars as necessary to provide 3" clear from the longitudinal construction joint between the approach slab and gutters.

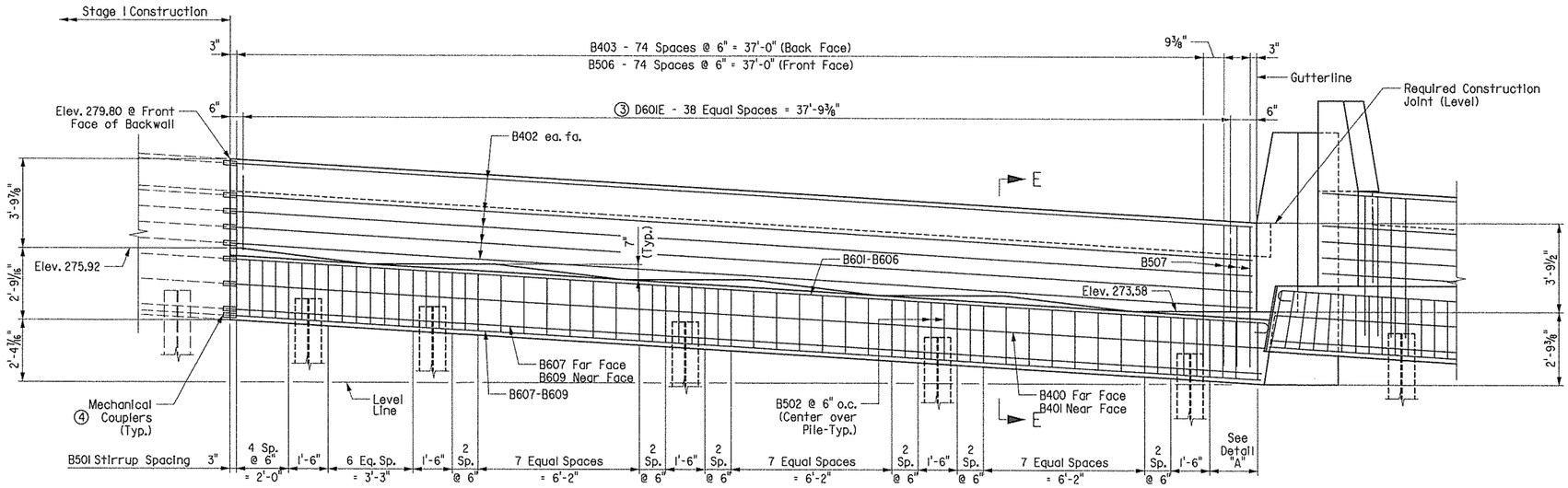

ELEVATION - STAGE II CONSTRUCTION

Scale: ⅜" = 1'-0"
(Looking Ahead)

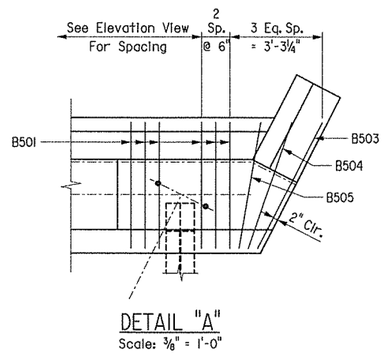

DETAIL "A"

Scale: ⅜" = 1'-0"

④ Denotes: Mechanical couplers shall be from the Qualified Products List, shall maintain minimum clearances shown, and their payment is subsidiary to the item "Reinforcing Steel - Bridge (Grade 60)". The couplers shall develop at least 125% of the specified yield strength of the bar.

STATE OF ARKANSAS
REGISTERED PROFESSIONAL ENGINEER
No. 11339
LARRY W. MILLER
8-19-13
BRIDGE ENGINEER

BRIDGE A
SHEET 2 OF 3
DETAILS OF BENT 4
MAIN STREET

ROUTE 67 SEC. 10

ARKANSAS STATE HIGHWAY COMMISSION

LITTLE ROCK, ARK.

DRAWN BY: DLM DATE: 02-13
CHECKED BY: GS DATE: 03-01-13
DESIGNED BY: DLM DATE: 02-13

FILENAME: b061276a2_b42.dgn
SCALE: As Shown

BRIDGE NO. A7283 DRAWING NO. 53649

DATE REVISED	DATE FILMED	DATE REVISED	DATE FILMED	FED. ROAD DIST. NO.	STATE	FED. AID PROJ. NO.	SHEET NO.	TOTAL SHEETS
				6	ARK.			
				JOB NO.		061276	246	438
				(1) A7283		END BENT 4 DETAILS		53650

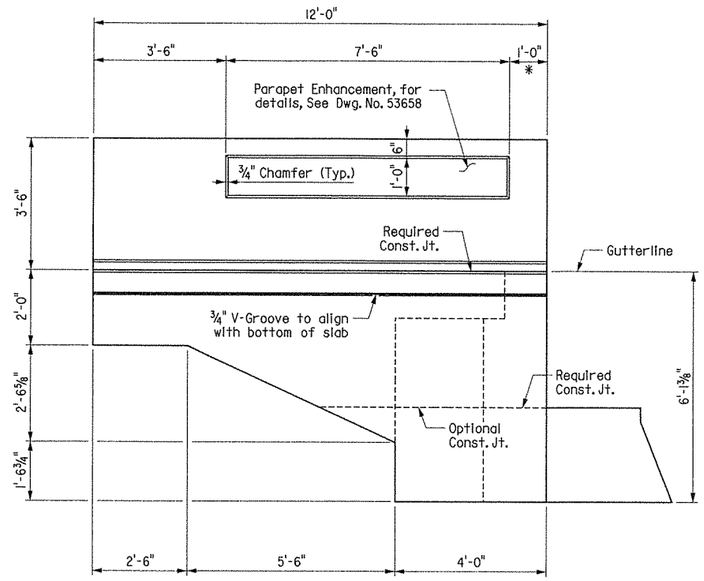

VIEW A-A

Scale: ½" = 1'-0"

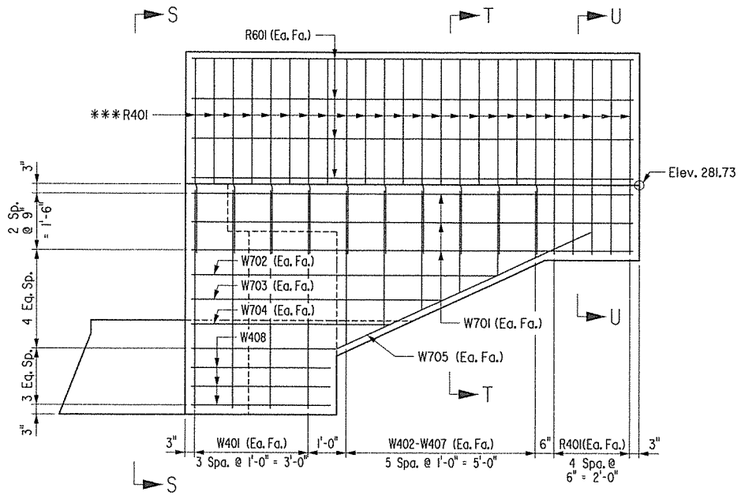

VIEW B-B

Scale: ½" = 1'-0"

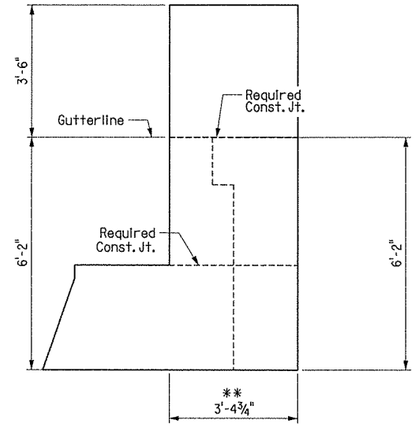

VIEW C-C

Scale: ½" = 1'-0"

NOTE: Bars designated with an "E" suffix shall be epoxy coated.

BAR LIST - BENT 4

Mark	No. Req'd	Length	"A"	Pin Dia.
B400	1	74'-10"	74'-10"	Str.
B401	1	72'-11"	72'-11"	Str.
B402	10	74'-5"	71'-6"	2"
B403	132	4'-2"	---	Str.
B404	2	4'-11"	---	Str.
B501	93	13'-1"	---	2½"
B502	18	8'-1"	---	2½"
B503	1	14'-1"	---	2½"
B504	1	13'-8"	---	2½"
B505	2	13'-3"	---	2½"
B506	132	8'-2"	---	2½"
B507	10	11'-3"	---	2½"
B600	18	2'-10"	---	4½"
B601	1	76'-2"	74'-10"	4½"
B602 to	1 ea.	76'-1"	74'-9"	4½"
B606		74'-3"	72'-11"	
B607	2	74'-10"	74'-10"	Str.
B608	2	73'-10"	73'-10"	Str.
B609	2	72'-11"	72'-11"	Str.
B610	4	7'-3"	---	4½"
D601E	71	5'-9"	---	4½"
R401	56	5'-3"	---	Str.
R601	8	11'-8"	---	Str.
R602	8	3'-1"	---	Str.
W401	8	6'-3"	---	Str.
W402 to	2 ea.	4'-1" to	---	Str.
W407		1'-9"		
W408	3	8'-9"	---	2"
W409	6	6'-5"	---	Str.
W410	18	3'-1"	---	Str.
W701	6	11'-8"	---	Str.
W702	2	8'-1"	---	Str.
W703	2	6'-8"	---	Str.
W704	2	5'-3"	---	Str.
W705	2	11'-3"	---	2"

BENDING DIAGRAMS
(Dimensions are out to out of bars)

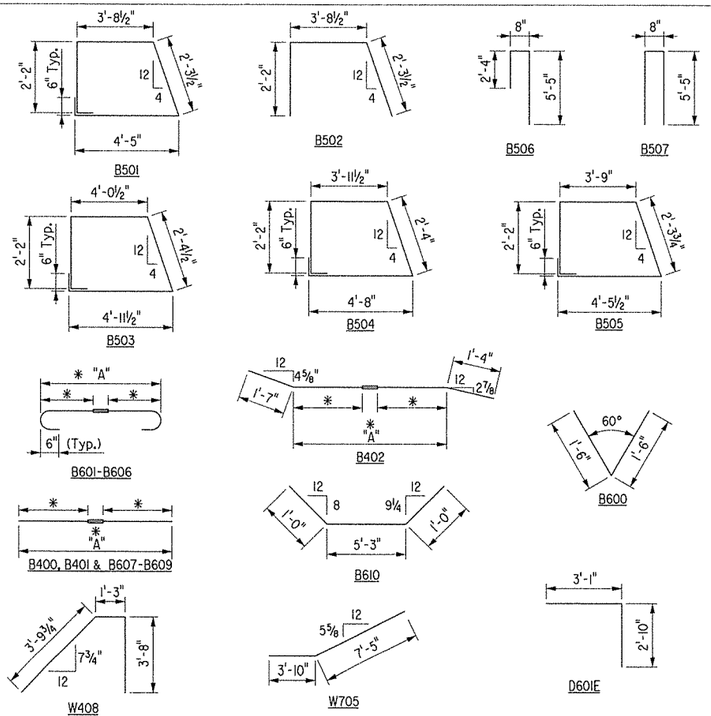

*Individual bar lengths should be determinded by the Contractor based on the type of mechanical coupler used.

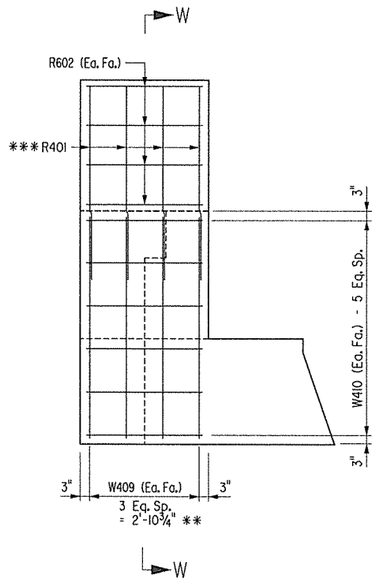

VIEW D-D

Scale: ½" = 1'-0"

* Parapet Enhancement shall be made continuous if slip forms are used on bridge parapet rail.

**Measured along gutterline

*** Bend R401 in field as necessary to match rail face. Pin dia.=4".

For GENERAL NOTES FOR SUBSTRUCTURE, see Dwg. No. 53644.

For additional information, see LAYOUT on Dwg. No. 53636.

For VIEW S-S, SECTION T-T, SECTION U-U and SECTION W-W see Dwg. No. 53644.

STATE OF ARKANSAS
REGISTERED PROFESSIONAL ENGINEER
No. 11339
8-19-13
LARRY W. MILLER
BRIDGE ENGINEER

BRIDGE A
SHEET 3 OF 3
DETAILS OF BENT 4
MAIN STREET

ROUTE 67 SEC. 10

ARKANSAS STATE HIGHWAY COMMISSION

LITTLE ROCK, ARK.

DRAWN BY: DLM DATE: 02-13
CHECKED BY: GS DATE: 03-01-13
DESIGNED BY: DLM DATE: 02-13

FILENAME: b061276a2_b43.dgn
SCALE: As Shown

BRIDGE NO. A7283 DRAWING NO. 53650

DATE REVISED	DATE FILMED	DATE REVISED	DATE FILMED	FED. ROAD DIST. NO.	STATE	FED. AID PROJ. NO.	SHEET NO.	TOTAL SHEETS
				6	ARK.			
				JOB NO.		061276	247	438
				(1) A7283		SPAN DETAILS		53651

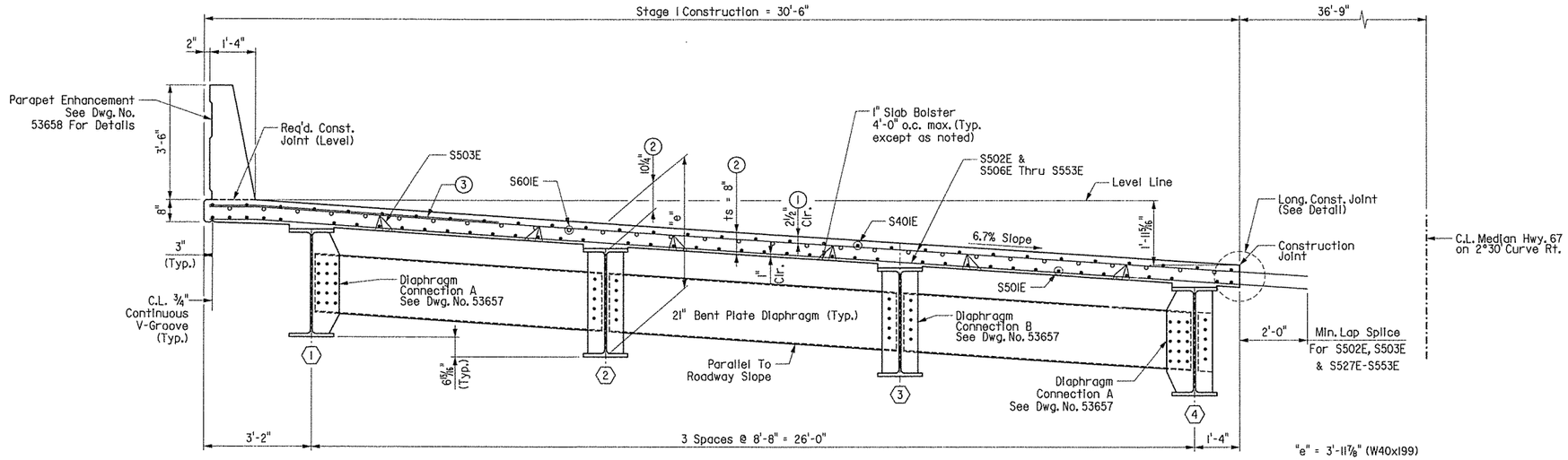

TYPICAL SECTION - STAGE I CONSTRUCTION

(Looking Ahead)
Scale: ½" = 1'-0"

"e" = 3'-11⅞" (W40x199)
"e" = 4'-0" (W40x215)
@ C.L. Beam & C.L. Bearing

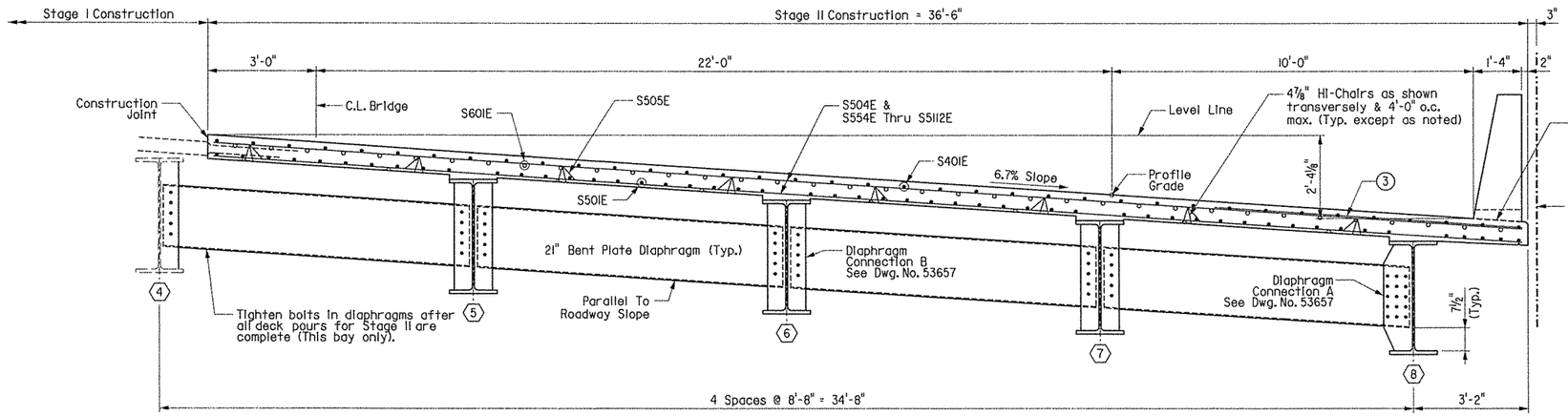

TYPICAL SECTION - STAGE II CONSTRUCTION

(Looking Ahead)
Scale: ½" = 1'-0"

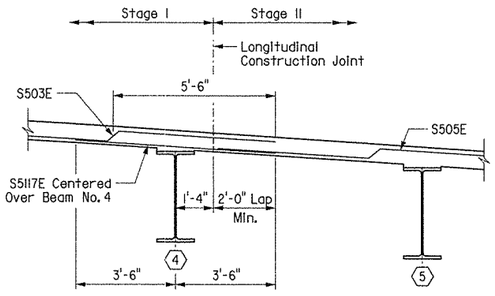

LAP DETAIL OF TRUSS BARS

⅜" = 1'-0"

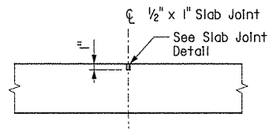

Use Type 3 or 4 Joint Sealer. See subsections 501.02(h) and 501.05(j). Backer rod filler will not be required. Joint Sealer shall be measured and paid for as Class S(AE) Concrete-Bridge. Longitudinal joints shall be formed.

LONGITUDINAL CONSTRUCTION JOINT

No Scale

NOTES:

One Epoxy Coated #5 bar in the top and one Epoxy Coated #5 bar in the bottom may be substituted for each bar S503E and S505E. Payment will be based on the weight of bars S503E and S505E.

Class 1 Protective Surface Treatment shall be applied to the roadway surface and the top and roadway face of railing.

All bars designated with an "E" suffix are to be epoxy coated.

STATE OF ARKANSAS
LARRY W. MILLER
REGISTERED PROFESSIONAL ENGINEER
No. 11339
3-24-14

BRIDGE ENGINEER

(1) TOLERANCE:
Minus: ¼"
Plus: Equal to amount of slab thickening used to meet slab thickness tolerance. See "ADJUSTMENT FOR SLAB THICKNESS TOLERANCE WHEN REMOVABLE DECK FORMING IS USED".

(2) See "ADJUSTMENT FOR SLAB THICKNESS TOLERANCE WHEN REMOVABLE DECK FORMING IS USED".

SLAB REINFORCING:

Transverse:
S503E & S505E @ 12" Centers (Bent up over beams)
S502E & S504E @ 12" Centers (Top & Bottom)
S506E-S5102E @ 6" Centers (Top & Bottom)
(3) S701E (Place as shown)
See DETAIL A on Dwg. No. 53653
Longitudinal:
S401E @ 12" Centers (Top)
S501E as shown (Bottom)
S601E @ 12" Centers (Top over Int. Bents)

For additional reinforcing details, see Dwg. No. 53653 & 53655.

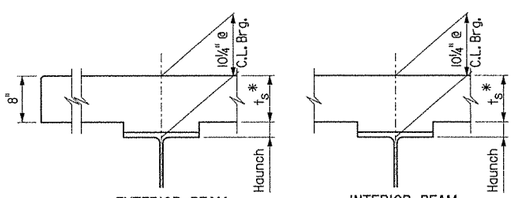

Note: ts = slab thickness as shown on "TYPICAL SECTION".
*Tolerance when removable deck forming is used is +½", -¼".
Haunch forming is required and shall be adjusted to maintain slab thickness tolerance.

ADJUSTMENT FOR SLAB THICKNESS TOLERANCE WHEN REMOVABLE DECK FORMING IS USED

No Scale

Haunch dimension may vary within the following limits to maintain the grade and slab thickness tolerance; Minimum - occurs when top flange contacts bottom reinforcing; Maximum - top flange thickness plus 2⅛". No increase in concrete and structural steel quantities will be made to maintain tolerances.

Tolerances shown are applicable only when removable deck forming is used. See Std. Dwg. No. 55005 for tolerances when permanent steel deck forms are used. Payment for concrete shall be based on removable deck forming.

BRIDGE A
SHEET 1 OF 5
DETAILS OF 237'-0" CONTINUOUS COMPOSITE W-BEAM UNIT
MAIN STREET

ROUTE 67 SEC. 10

ARKANSAS STATE HIGHWAY COMMISSION

LITTLE ROCK, ARK.

DRAWN BY: DLM DATE: 01-13 FILENAME: b061276a2_sl.dgn
CHECKED BY: GS DATE: 03-01-13 SCALE: As Shown
DESIGNED BY: DLM DATE: 01-13

BRIDGE NO. A7283 DRAWING NO. 53651

DATE REVISED	DATE FILMED	DATE REVISED	DATE FILMED	FED. ROAD DIST. NO.	STATE	FED. AID PROJ. NO.	SHEET NO.	TOTAL SHEETS
				6	ARK.			
				JOB NO.		061276	248	438
				(1) A7283		SPAN DETAILS		53652

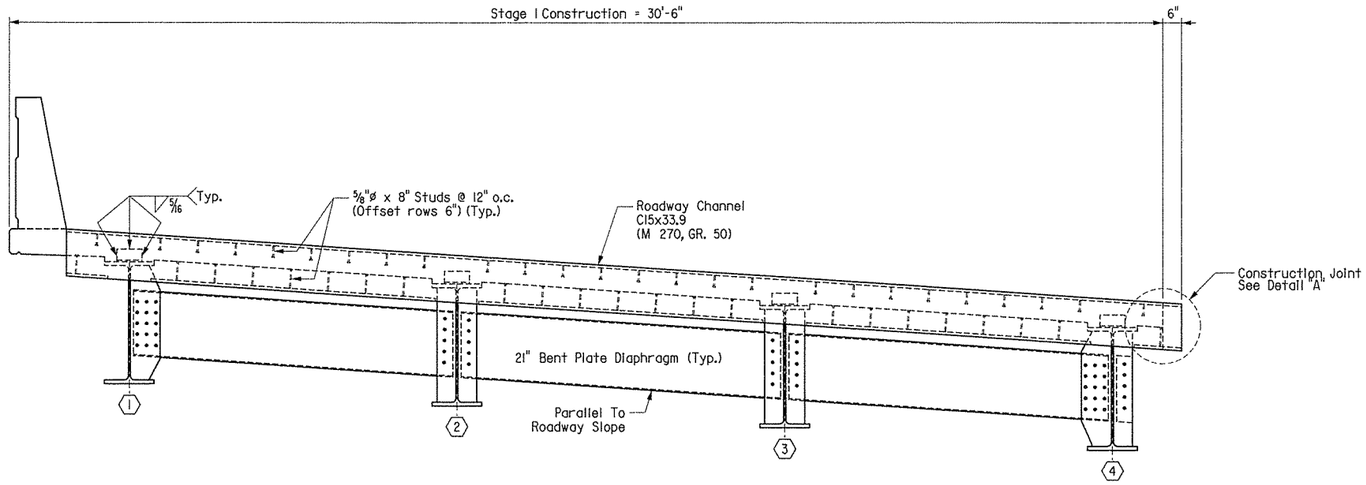

VIEW AT C.L. JOINT - STAGE I CONSTRUCTION

(Looking Ahead)
Scale: ½" = 1'-0"

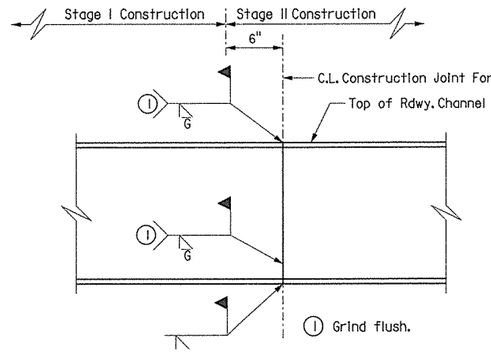

DETAIL "A" (EXPANSION DEVICE AT STAGE CONSTRUCTION JOINT)

Scale 1½"= 1'-0"

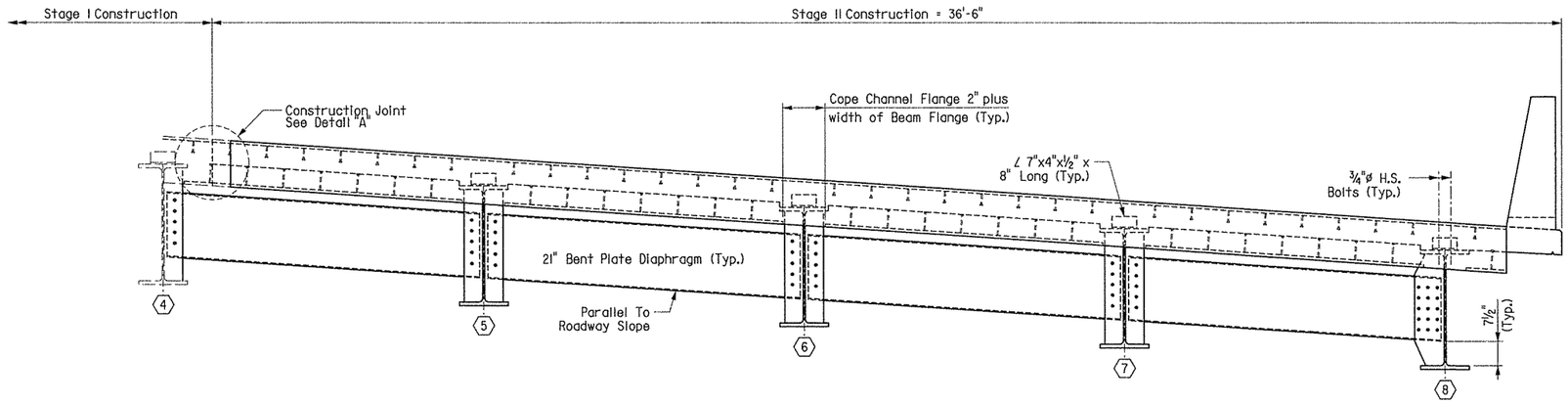

VIEW AT C.L. JOINT - STAGE II CONSTRUCTION

(Looking Ahead)
Scale: ½" = 1'-0"

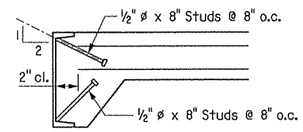

Note: As an alternate to ⅝" ø studs, ½" ø x 8" studs spaced as shown may be used. Use weight of ⅝" ø stud as basis of measurement of structural steel in anchors.

DETAIL OF ALTERNATE ANCHORS

No Scale

EXPANSION DEVICE:

Roadway Channel C15x33.9 (M 270, Gr. 50)
Connection ∠'s 7"x4"x½" x 8" Long
Detail Device ⅛" high & provide ¼" shims using 1 - ⅛" PL & 2 - 1/16" PL's

For additional details of Poured Silicone Joint, see Dwg. No. 53672.

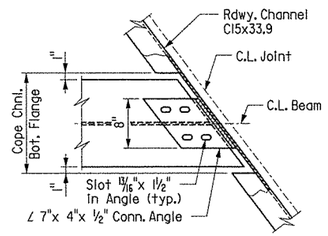

ROADWAY CHANNEL CONNECTION DETAIL

STATE OF ARKANSAS
REGISTERED PROFESSIONAL ENGINEER
No. 13339
LARRY W. MILLER
8-19-13

BRIDGE ENGINEER

BRIDGE A
SHEET 2 OF 5
DETAILS OF 237'-0" CONTINUOUS COMPOSITE W-BEAM UNIT
MAIN STREET

ROUTE 67 SEC. 10

ARKANSAS STATE HIGHWAY COMMISSION

LITTLE ROCK, ARK.

DRAWN BY: DLM DATE: 01-13
CHECKED BY: GS DATE: 03-01-13
DESIGNED BY: DLM DATE: 01-13

FILENAME: b061276a2_s2.dgn
SCALE: As Shown

BRIDGE NO. A7283 DRAWING NO. 53652

Ⓕ C.L. Full Depth Parapet Joint (¼" to 1" max.). Stop 4" from top of slab.

Ⓟ C.L. Partial Depth Parapet Joint (¼" to 1" max.). Stop 1'-6" from top of slab.

DATE REVISED	DATE FILMED	DATE REVISED	DATE FILMED

FED. ROAD DIST. NO.	STATE	FED. AID PROJ. NO.	SHEET NO.	TOTAL SHEETS
6	ARK.			
JOB NO.		061276	249	438
Ⓘ A7283		SPAN DETAILS		53653

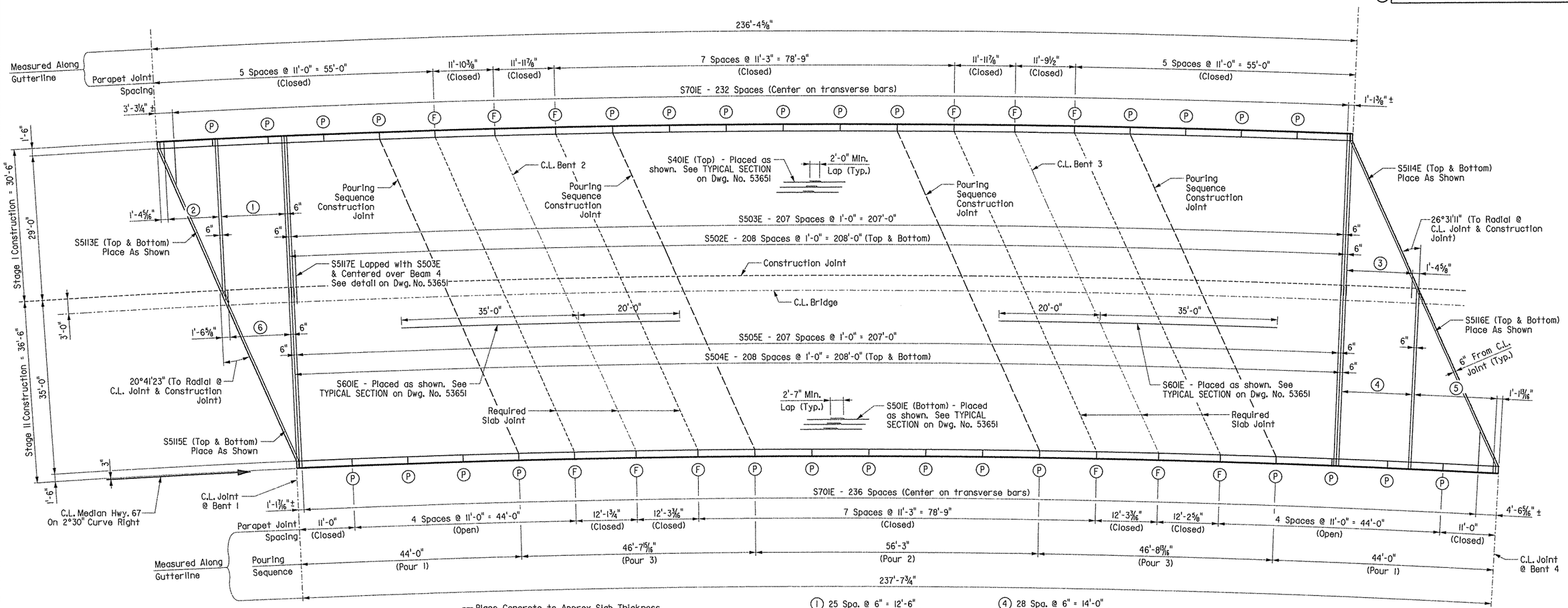

① 25 Spa. @ 6" = 12'-6" S502E (Top & Bottom)

② 20 Spa. @ 6" = 10'-0" S506E-S526E (Top & bottom)

③ 26 Spa. @ 6" = 13'-0" S527E-S553E (Top & bottom)

④ 28 Spa. @ 6" = 14'-0" S504E (Top & Bottom)

⑤ 33 Spa. @ 6" = 16'-6" S554E-S587E (Top & bottom)

⑥ 24 Spa. @ 6" = 12'-0" S588E-S5112E (Top & bottom)

Note: See TYPICAL SECTION on Dwg. No. 53651 for placement of longitudinal reinforcing.

Note: For Bar List, see Dwg. No. 53655.

Note: For parapet details, see Dwg. No. 53658 & 53659.

Note: All transverse reinforcing steel shall be placed on radial lines. Spacing is measured along Construction Joint, unless noted otherwise.

All longitudinal lines and longitudinal reinforcing steel shall be placed on curves concentric with C.L. Median.

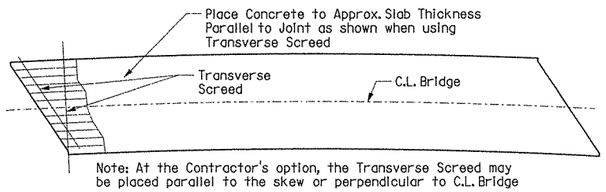

Note: At the Contractor's option, the Transverse Screed may be placed parallel to the skew or perpendicular to C.L. Bridge

CONCRETE PLACEMENT PROCEDURE

No Scale

Note: Pours with the same number may be placed simultaneously or separately. All Pours (1) must be placed before Pours (2) can be placed, and all Pours (2) before Pours (3). 48 hours shall elapse before the end of a pour and the start of the next pour. 72 hours shall elapse between the end of a pour and the start of an adjacent pour.

72 hours shall elapse between the completion of the entire deck and the pouring of the parapet. Any railing pours made before the entire slab unit has been placed must be approved by the Engineer.

The Contractor must obtain approval from the Engineer for any deviations from the pouring sequence shown.

Concrete in bridge superstructure shall be consolidated for the entire pour before any concrete has taken its initial set. This may require the use of a retarding agent.

Note: Required slab joints and pouring sequence construction joints shall align with parapet open joint at the gutterline.

1/2 " x 1" Type 3 or 4 Joint Sealer. See Subsection 501.02 (h) and 501.05 (j). Backer rod filler will not be required. Joint Sealer shall be measured and paid for as Class S(AE) Concrete-Bridge. Slab joints shall extend to the outside edge of the deck slab. Slab joints shall be installed before the parapet railing is poured. If slab joints are to be sawed, they shall be sawed as soon as the concrete has sufficiently set up to allow the sawing of joint without damage to the slab. Slab joints shall be placed at all Pouring Sequence Construction Joints and Required Slab Joint locations. The joint sealer shall extend across the deck slab (gutterline to gutterline). Slab joints shall align with parapet open joints.

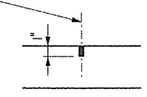

SLAB JOINT DETAIL

No Scale

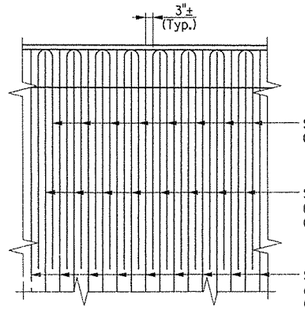

DETAIL A

Scale: ⅜" = 1'-0"

STATE OF ARKANSAS
LARRY W. MILLER
No. 11339
REGISTERED PROFESSIONAL ENGINEER
7-24-14

BRIDGE ENGINEER

BRIDGE A
SHEET 3 OF 5
DETAILS OF 237'-0" CONTINUOUS COMPOSITE W-BEAM UNIT
MAIN STREET

ROUTE 67 SEC. 10

ARKANSAS STATE HIGHWAY COMMISSION

LITTLE ROCK, ARK.

DRAWN BY: DLM DATE: 01-13
CHECKED BY: GS DATE: 03-01-13
DESIGNED BY: DLM DATE: 01-13
FILENAME: b061276a2_s3.dgn
SCALE: As Shown

BRIDGE NO. A7283 DRAWING NO. 53653

DATE REVISED	DATE FILMED	DATE REVISED	DATE FILMED	FED. ROAD DIST. NO.	STATE	FED. AID PROJ. NO.	SHEET NO.	TOTAL SHEETS
				6	ARK.			
				JOB NO.		061276	250	438
				(1) A7283		SPAN DETAILS		53654

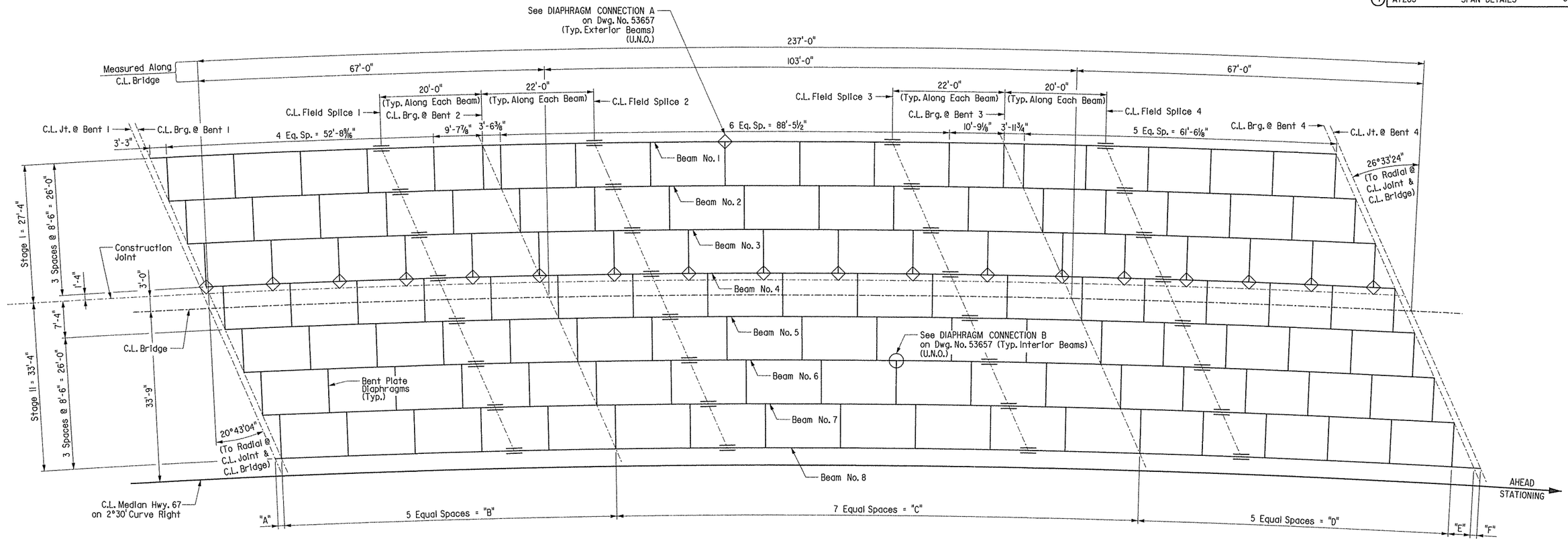

FRAMING PLAN

Scale: 1" = 10'-0"

◇ = Diaphragm Connection A

○ = Diaphragm Connection B

TABLE OF VARIABLES

Beam No.	1	2	3	4	5	6	7	8
"A"	1'-3"	1'-3"	1'-3"	1'-3"	1'-3"	1'-3"	1'-3"	1'-3"
"B"	See "Framing Plan"	65'-7 15/16"	65'-8 1/4"	65'-8 3/4"	65'-9 1/4"	65'-9 3/4"	65'-10 3/16"	65'-10 11/16"
"C"		102'-9 13/16"	102'-10 15/16"	102'-11 5/8"	103'-0 1/2"	103'-1 7/16"	103'-2 1/4"	103'-3 1/4"
"D"		61'-3 1/2"	61'-4"	61'-4 3/8"	61'-4 15/16"	61'-5 3/16"	61'-5 11/16"	61'-6 1/8"
"E"	---	4'-3 1/8"	4'-3 5/16"	4'-3 7/16"	4'-3 11/16"	4'-4 1/16"	4'-4 5/16"	4'-4 9/16"
"F"	1'-3 1/8"	1'-3 1/8"	1'-3 1/8"	1'-3 1/8"	1'-3 1/8"	1'-3 3/4"	1'-3 3/4"	1'-3 3/4"
"G"	1'-1 7/8"	1'-1 7/8"	1'-1 7/8"	1'-1 7/8"	1'-1 7/8"	1'-1 15/16"	1'-1 15/16"	1'-1 15/16"
"H"	1'-2 1/2"	1'-2 1/2"	1'-2 1/2"	1'-2 1/2"	1'-2 5/16"	1'-2 9/16"	1'-2 9/16"	1'-2 9/16"
"J"	2 15/16"	2 15/16"	3"	3"	3"	3"	3"	3 1/16"
"K"	3 7/8"	3 7/8"	3 15/16"	3 15/16"	3 15/16"	4"	4"	4"

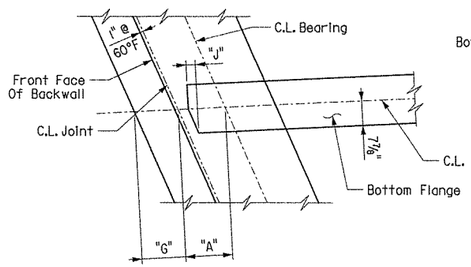

BEARING PLAN @ END BENT 1

Scale: 1/2" = 1'-0"

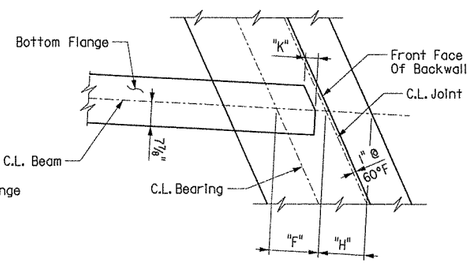

BEARING PLAN @ END BENT 4

Scale: 1/2" = 1'-0"

STATE OF ARKANSAS
Larry W. Miller
REGISTERED PROFESSIONAL ENGINEER
No. 11339
8-19-13
LARRY W. MILLER
BRIDGE ENGINEER

NOTES:

All longitudinal dimensions are taken along C.L. Beam, U.N.O.

Beams are curved and concentric to C.L. Median. All Diaphragms are on radial lines, U.N.O.

For BEAM ELEVATION, see Dwg. No. 53656.

For FIELD SPLICE DETAILS, see Dwg. No. 53656.

For BENT PLATE DIAPHRAGM DETAILS, see Dwg. No. 53657.

BRIDGE A
SHEET 4 OF 5
DETAILS OF 237'-0" CONTINUOUS COMPOSITE W-BEAM UNIT
MAIN STREET

ROUTE 67 SEC. 10

ARKANSAS STATE HIGHWAY COMMISSION

LITTLE ROCK, ARK.

DRAWN BY: DLM DATE: 01-13 FILENAME: b061276a2_s4.dgn
CHECKED BY: GS DATE: 03-01-13 SCALE: As Shown
DESIGNED BY: DLM DATE: 01-13

BRIDGE NO. A7283 DRAWING NO. 53654

DATE REVISED	DATE FILMED	DATE REVISED	DATE FILMED	FED. ROAD DIST. NO.	STATE	FED. AID PROJ. NO.	SHEET NO.	TOTAL SHEETS
				6	ARK.			
				JOB NO.		061276	251	438
				(1) A7283		SPAN DETAILS		53655

TABLE OF DEAD LOAD DEFLECTIONS (INCHES)

Camber for Dead Load Deflection plus vertical curve +/- ¼" tolerance. Vertical curve corrections not included. Negative sign (-) indicates upward deflection. Deflections shown are along the centerline beam from the plane perpendicular to the web extending from centerline bearing to centerline bearing.

	POINT OF DEFLECTION	Structural Steel								Structural Steel (+) Slab								Structural Steel (+) Slab (+) Parapet Rail							
		Beam 1	Beam 2	Beam 3	Beam 4	Beam 5	Beam 6	Beam 7	Beam 8	Beam 1	Beam 2	Beam 3	Beam 4	Beam 5	Beam 6	Beam 7	Beam 8	Beam 1	Beam 2	Beam 3	Beam 4	Beam 5	Beam 6	Beam 7	Beam 8
SPAN NO. 1	1.00	0.000	0.000	0.000	0.000	0.000	0.000	0.000	0.000	0.000	0.000	0.000	0.000	0.000	0.000	0.000	0.000	0.000	0.000	0.000	0.000	0.000	0.000	0.000	0.000
	1.10	0.017	0.018	0.018	0.017	0.017	0.018	0.017	0.015	0.085	0.094	0.096	0.093	0.093	0.095	0.092	0.077	0.090	0.099	0.101	0.098	0.098	0.100	0.097	0.082
	1.20	0.028	0.032	0.032	0.031	0.031	0.032	0.031	0.027	0.139	0.170	0.173	0.167	0.168	0.172	0.167	0.136	0.148	0.179	0.182	0.176	0.177	0.181	0.176	0.145
	1.30	0.033	0.038	0.039	0.038	0.038	0.039	0.037	0.033	0.163	0.205	0.210	0.202	0.204	0.209	0.201	0.167	0.173	0.216	0.221	0.213	0.215	0.220	0.212	0.178
	1.40	0.032	0.037	0.038	0.036	0.037	0.038	0.036	0.032	0.158	0.197	0.202	0.192	0.195	0.201	0.194	0.159	0.168	0.208	0.213	0.203	0.206	0.212	0.204	0.170
	1.50	0.024	0.028	0.029	0.027	0.028	0.029	0.027	0.024	0.117	0.148	0.153	0.142	0.146	0.153	0.146	0.119	0.125	0.156	0.161	0.150	0.154	0.161	0.154	0.127
	1.60	0.010	0.014	0.015	0.013	0.013	0.015	0.013	0.011	0.043	0.068	0.072	0.061	0.065	0.072	0.067	0.052	0.046	0.071	0.076	0.065	0.069	0.076	0.070	0.056
	1.70	-0.002	-0.002	-0.001	-0.003	-0.002	-0.001	-0.002	-0.003	-0.019	-0.017	-0.014	-0.024	-0.019	-0.013	-0.016	-0.021	-0.020	-0.018	-0.015	-0.025	-0.020	-0.014	-0.017	-0.022
	1.80	-0.016	-0.015	-0.014	-0.016	-0.015	-0.014	-0.015	-0.013	-0.087	-0.086	-0.084	-0.092	-0.088	-0.083	-0.084	-0.071	-0.092	-0.091	-0.089	-0.097	-0.093	-0.088	-0.089	-0.075
	1.90	-0.013	-0.016	-0.016	-0.017	-0.016	-0.016	-0.016	-0.015	-0.070	-0.090	-0.090	-0.095	-0.092	-0.089	-0.090	-0.080	-0.074	-0.095	-0.095	-0.100	-0.097	-0.094	-0.095	-0.085
SPAN NO. 2	2.00	0.000	0.000	0.000	0.000	0.000	0.000	0.000	0.000	0.000	0.000	0.000	0.000	0.000	0.000	0.000	0.000	0.000	0.000	0.000	0.000	0.000	0.000	0.000	0.000
	2.10	0.068	0.072	0.071	0.073	0.071	0.071	0.070	0.067	0.351	0.395	0.396	0.404	0.397	0.393	0.385	0.349	0.373	0.417	0.418	0.426	0.419	0.415	0.407	0.371
	2.20	0.163	0.176	0.175	0.178	0.175	0.173	0.172	0.167	0.846	0.967	0.970	0.988	0.971	0.961	0.944	0.866	0.900	1.021	1.024	1.042	1.025	1.014	0.998	0.921
	2.30	0.261	0.275	0.273	0.278	0.273	0.271	0.269	0.262	1.350	1.512	1.518	1.546	1.517	1.505	1.479	1.358	1.436	1.597	1.602	1.630	1.601	1.588	1.563	1.444
	2.40	0.324	0.344	0.343	0.349	0.342	0.340	0.337	0.331	1.680	1.894	1.904	1.940	1.901	1.888	1.854	1.716	1.787	2.000	2.009	2.045	2.005	1.992	1.960	1.825
	2.50	0.349	0.370	0.368	0.376	0.367	0.365	0.362	0.360	1.806	2.035	2.045	2.087	2.041	2.029	1.992	1.865	1.921	2.149	2.158	2.200	2.153	2.141	2.105	1.983
	2.60	0.326	0.345	0.343	0.351	0.342	0.341	0.338	0.337	1.685	1.897	1.907	1.949	1.901	1.894	1.858	1.748	1.793	2.003	2.013	2.054	2.006	1.998	1.964	1.859
	2.70	0.259	0.275	0.274	0.280	0.273	0.272	0.270	0.273	1.339	1.513	1.523	1.557	1.517	1.512	1.484	1.413	1.425	1.598	1.608	1.641	1.601	1.596	1.569	1.503
	2.80	0.169	0.177	0.176	0.180	0.176	0.175	0.174	0.178	0.872	0.973	0.980	1.001	0.976	0.972	0.954	0.922	0.928	1.028	1.035	1.055	1.030	1.026	1.009	0.980
	2.90	0.073	0.073	0.073	0.075	0.073	0.073	0.072	0.074	0.375	0.403	0.408	0.417	0.406	0.405	0.397	0.384	0.399	0.426	0.431	0.440	0.428	0.427	0.420	0.408
	3.00	0.000	0.000	0.000	0.000	0.000	0.000	0.000	0.000	0.000	0.000	0.000	0.000	0.000	0.000	0.000	0.000	0.000	0.000	0.000	0.000	0.000	0.000	0.000	0.000
SPAN NO. 3	3.10	-0.016	-0.017	-0.017	-0.018	-0.017	-0.017	-0.017	-0.020	-0.083	-0.095	-0.096	-0.101	-0.096	-0.096	-0.095	-0.104	-0.088	-0.100	-0.101	-0.106	-0.101	-0.101	-0.101	-0.110
	3.20	-0.013	-0.014	-0.014	-0.015	-0.014	-0.014	-0.015	-0.021	-0.069	-0.081	-0.085	-0.092	-0.085	-0.084	-0.085	-0.114	-0.073	-0.086	-0.090	-0.097	-0.090	-0.089	-0.090	-0.121
	3.30	-0.003	-0.002	-0.002	-0.003	-0.002	-0.002	-0.003	-0.011	-0.020	-0.016	-0.019	-0.029	-0.020	-0.019	-0.022	-0.065	-0.021	-0.017	-0.020	-0.030	-0.021	-0.020	-0.024	-0.069
	3.40	0.015	0.015	0.015	0.013	0.015	0.015	0.013	0.003	0.070	0.075	0.071	0.060	0.070	0.070	0.065	0.007	0.075	0.079	0.075	0.064	0.074	0.074	0.068	0.008
	3.50	0.027	0.029	0.029	0.027	0.029	0.029	0.027	0.017	0.133	0.153	0.151	0.139	0.148	0.149	0.142	0.080	0.142	0.161	0.159	0.147	0.156	0.157	0.149	0.086
	3.60	0.037	0.038	0.039	0.037	0.038	0.038	0.036	0.027	0.183	0.204	0.203	0.192	0.200	0.200	0.192	0.130	0.195	0.215	0.214	0.203	0.211	0.211	0.202	0.139
	3.70	0.037	0.040	0.040	0.038	0.039	0.039	0.038	0.030	0.187	0.212	0.212	0.202	0.208	0.208	0.201	0.147	0.199	0.224	0.223	0.213	0.219	0.219	0.212	0.157
	3.80	0.031	0.033	0.033	0.032	0.032	0.032	0.031	0.025	0.156	0.175	0.175	0.168	0.172	0.172	0.166	0.125	0.166	0.185	0.184	0.177	0.181	0.181	0.175	0.133
	3.90	0.018	0.019	0.019	0.018	0.018	0.018	0.018	0.015	0.090	0.100	0.100	0.096	0.098	0.098	0.096	0.076	0.096	0.105	0.105	0.101	0.103	0.103	0.101	0.081
	4.00	0.000	0.000	0.000	0.000	0.000	0.000	0.000	0.000	0.000	0.000	0.000	0.000	0.000	0.000	0.000	0.000	0.000	0.000	0.000	0.000	0.000	0.000	0.000	0.000

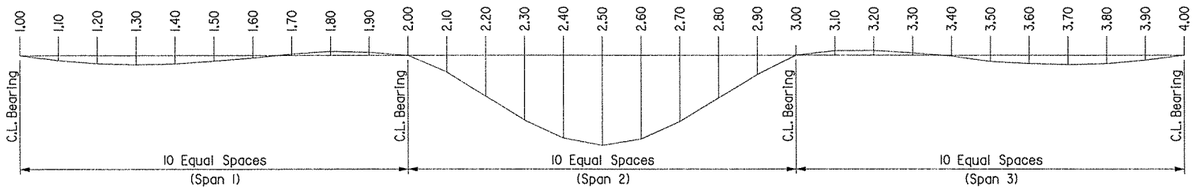

DEAD LOAD DEFLECTION DIAGRAM

Not to Scale

SUPERSTRUCTURE BAR LIST

Mark	No. Req'd.	Length	A	Pin Dia.	Mark	No. Req'd.	Length	Pin Dia.
S401E	476	35'-10"	---	Str.	S601E	132	55'-0"	Str.
S501E	470	49'-10"	---	Str.	S701E	470	12'-0"	5 1/4"
S502E	470	32'-4"	---	Str.				
S503E	208	32'-11"	---	3"	P401E	878	6'-8"	3 3/4"
S504E	476	36'-4"	---	Str.	P402E	80	8'-0"	2"
S505E	208	37'-0"	---	3"				
S506E to S526E	2 ea.	4'-4" to 31'-1"	---	Str.	P501E	878	5'-7"	3 3/4"
					P502E	100	10'-8"	Str.
S527E to S553E	2 ea.	4'-3" to 30'-8"	---	Str.	P503E	70	10'-11"	Str.
					P504E	11	11'-7"	Str.
S554E to S587E	2 ea.	3'-0" to 35'-6"	---	Str.	P505E	22	11'-8"	Str.
					P506E	11	11'-5"	Str.
S588E to S5112E	2 ea.	3'-3" to 34'-5"	---	Str.	P507E	11	11'-9"	Str.
					P508E	22	11'-11"	Str.
S5113E	2	34'-10"	33'-4"	3 1/4"	P509E	11	11'-10"	Str.
S5114E	2	36'-3"	34'-9"	3 1/4"	P510E	12	54'-8"	
S5115E	2	38'-9"	37'-3"	3 1/4"	P511E	12	41'-2"	
S5116E	2	40'-6"	39'-0"	3 1/4"				
S5117	208	7'-0"		Str.				

Bending Diagrams
(Dimensions are out to out of bars.)

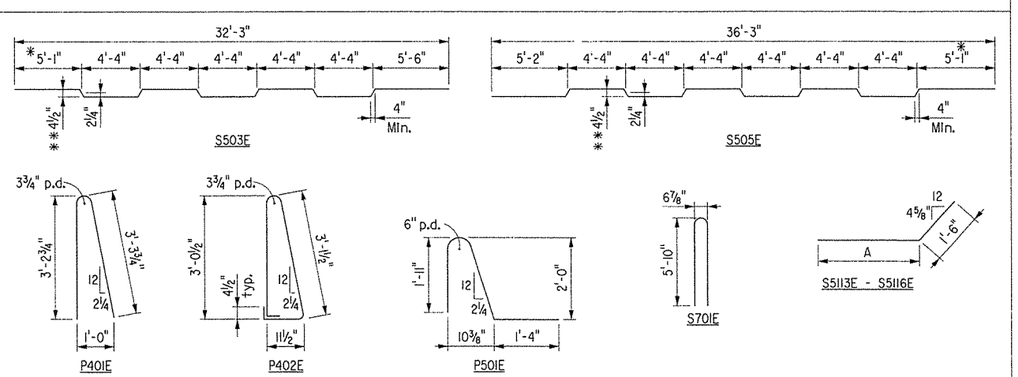

** ½" Overtolerance, No Undertolerance

* Denotes parapet end of bar.

Note: All bars designated with an "E" suffix are to be epoxy coated.

STATE OF ARKANSAS
LARRY W. MILLER
No. 11339
REGISTERED PROFESSIONAL ENGINEER
8-19-13
BRIDGE ENGINEER

BRIDGE A
SHEET 5 OF 5
DETAILS OF 237'-0" CONTINUOUS COMPOSITE W-BEAM UNIT
MAIN STREET

ROUTE 67 SEC. 10

ARKANSAS STATE HIGHWAY COMMISSION

LITTLE ROCK, ARK.

DRAWN BY: DLM DATE: 01-13
CHECKED BY: GS DATE: 03-01-13
DESIGNED BY: DLM DATE: 01-13

FILENAME: b061276a2_s5.dgn
SCALE: As Shown

BRIDGE NO. A7283 DRAWING NO. 53655

DATE REVISED	DATE FILMED	DATE REVISED	DATE FILMED	FED. ROAD DIST. NO.	STATE	FED. AID PROJ. NO.	SHEET NO.	TOTAL SHEETS
				6	ARK.			
				JOB NO.		061276	252	438
				(1)	A&B7283	SPAN DETAILS		53656

TABLE OF BEAM VARIABLES

(Dimensions shown are taken along C.L. Beam)

BRIDGE NO.	BEAM NO.	"A"	"B"	"C"	"D"	"E"	"F"	"G"	"H"	"J"	"K"
A7283	1	236'-4 15/16"	66'-10 7/16"	102'-9"	66'-9 1/2"	46'-10 7/16"	58'-9"	46'-9 1/2"	1'-3"	1'-3 3/8"	7'-4 1/2"
	2	236'-6 15/16"	66'-10 15/16"	102'-9 9/16"	66'-10 3/8"	46'-10 15/16"	58'-9 9/16"	46'-10 3/8"	1'-3"	1'-3 5/8"	7'-4 15/16"
	3	236'-9"	66'-11 1/4"	102'-10 9/16"	66'-10 15/16"	46'-11 1/4"	58'-10 1/16"	46'-10 15/16"	1'-3"	1'-3 5/8"	7'-5 3/8"
	4	236'-10 15/16"	66'-11 3/4"	102'-11 5/8"	66'-11 1/2"	46'-11 3/4"	58'-11 5/8"	46'-11 1/2"	1'-3"	1'-3 5/8"	7'-5 11/16"
	5	237'-0 5/16"	67'-0 1/4"	103'-0 1/2"	67'-0 1/4"	47'-0 1/4"	59'-0 1/2"	47'-0 1/4"	1'-3"	1'-3 5/8"	7'-6 1/4"
	6	237'-3 1/8"	67'-0 3/4"	103'-1 7/16"	67'-0 5/16"	47'-0 3/4"	59'-1 7/16"	47'-0 5/16"	1'-3"	1'-3 3/4"	7'-6 11/16"
	7	237'-5 7/16"	67'-1 3/4"	103'-2 1/4"	67'-1 1/16"	47'-1 3/16"	59'-2 1/4"	47'-1 1/16"	1'-3"	1'-3 3/4"	7'-7 1/8"
	8	237'-7 5/16"	67'-1 11/16"	103'-3 1/4"	67'-2 3/8"	47'-1 11/16"	59'-3 1/4"	47'-2 3/8"	1'-3"	1'-3 3/4"	7'-7 5/8"

TABLE OF BEAM VARIABLES

(Dimensions shown are taken along C.L. Beam)

BRIDGE NO.	BEAM NO.	"A"	"B"	"C"	"D"	"E"	"F"	"G"	"H"	"J"	"K"
B7283	1	237'-5 3/8"	66'-10 5/16"	102'-9 1/8"	67'-9 3/4"	46'-10 5/16"	58'-9 1/8"	47'-9 3/4"	1'-3"	1'-3 3/4"	7'-4 9/16"
	2	237'-7 11/16"	66'-11 3/16"	102'-10 1/16"	67'-10 7/16"	46'-11 3/16"	58'-10 1/16"	47'-10 7/16"	1'-3"	1'-3 3/4"	7'-5"
	3	237'-9 15/16"	66'-11 5/8"	102'-11 1/16"	67'-11 3/16"	46'-11 5/8"	58'-11 1/16"	47'-11 3/16"	1'-3"	1'-3 3/4"	7'-5 5/16"
	4	238'-0 1/8"	67'-0 1/8"	103'-0"	68'-0"	47'-0 1/8"	59'-0"	48'-0"	1'-3"	1'-3 3/4"	7'-6"
	5	238'-2 1/4"	67'-0 5/8"	103'-0 5/16"	68'-0 3/4"	47'-0 5/8"	59'-0 5/16"	48'-0 3/4"	1'-3"	1'-3 3/4"	7'-6 1/2"
	6	238'-4 11/16"	67'-1 7/16"	103'-1 5/16"	68'-1 7/8"	47'-1 5/16"	59'-1 5/16"	48'-1 7/16"	1'-3"	1'-3 5/16"	7'-7"
	7	238'-6 15/16"	67'-1 11/16"	103'-2 7/8"	68'-2 1/4"	47'-1 11/16"	59'-2 7/8"	48'-2 1/4"	1'-3"	1'-3 5/16"	7'-7 1/16"

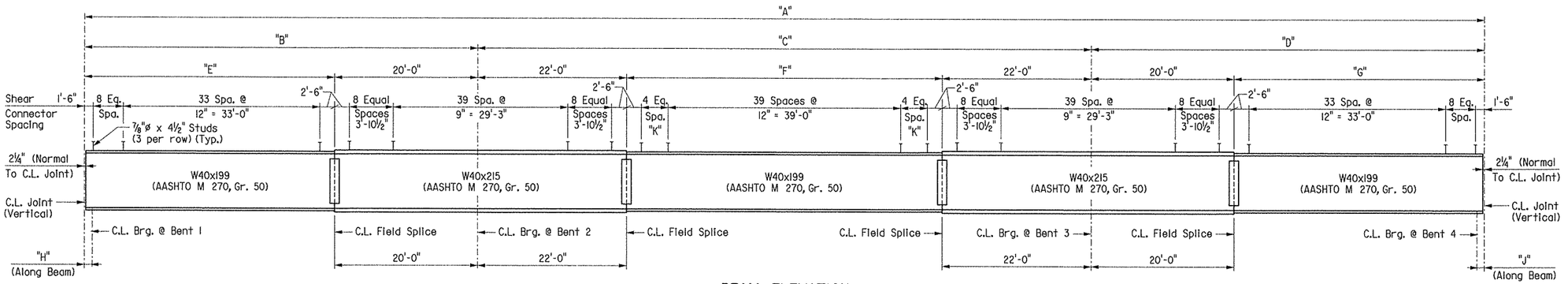

BEAM ELEVATION

No Scale

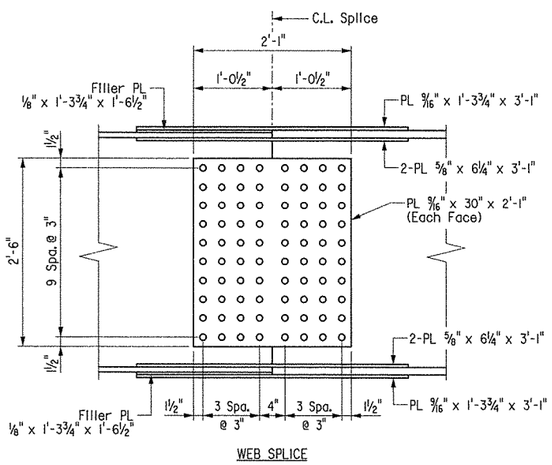

WEB SPLICE

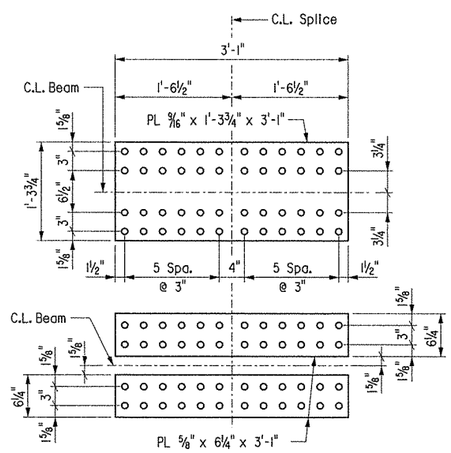

TOP AND BOTTOM FLANGE SPLICE

FIELD SPLICE DETAILS

Scale: 1" = 1'-0"

NOTE: All field splice bolts shall be 7/8" ø H.S. bolts. All field splice plates shall be AASHTO M 270, Gr. 50 steel.

Bolted field splices shown may be eliminated or shop welded splices may be substituted with approval of the Engineer.

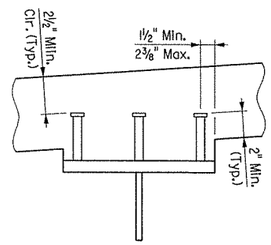

Stud Shear Connectors shown shall be 7/8"ø x 4½" long, granular flux filled, solid fluxed or equal, and automatically end welded to the beam flange in accordance with the recommendations of the Manufacturer. ¾"ø studs may be used in place of the 7/8"ø studs shown, at the ratio of 1.361 -¾"ø studs in place of one 7/8"ø stud. 7/8"ø studs will be used as basis for measurment of structural steel in shear connectors. Maximum stud spacing = 24".

SHEAR CONNECTOR DETAIL

No Scale

NOTES:

All longitudinal dimensions are taken along C.L. Beam, U.N.O.

Beams are curved and concentric to C.L. Bridge. All Diaphragms are on radial lines, U.N.O.

For FRAMING PLAN, see Dwg. No. 53654 & 53670.

STATE OF ARKANSAS
Larry W. Miller
REGISTERED PROFESSIONAL ENGINEER
No. 11339
8-19-13
LARRY W. MILLER
BRIDGE ENGINEER

SHEET 1 OF 4
COMMON DETAILS OF CONTINUOUS COMPOSITE W-BEAM UNIT MAIN STREET

ROUTE 67 SEC. 10

ARKANSAS STATE HIGHWAY COMMISSION

LITTLE ROCK, ARK.

DRAWN BY: DLM DATE: 01-13
CHECKED BY: GS DATE: 03-01-13
DESIGNED BY: DLM DATE: 01-13
FILENAME: b061276m2_s6.dgn
SCALE: As Shown

BRIDGE NO. A&B7283 DRAWING NO. 53656

DATE REVISED	DATE FILMED	DATE REVISED	DATE FILMED	FED. ROAD DIST. NO.	STATE	FED. AID PROJ. NO.	SHEET NO.	TOTAL SHEETS
				6	ARK.			
				JOB NO.		061276	253	438
				(1) A&B7283		SPAN DETAILS		53657

SUPERSTRUCTURE GENERAL NOTES

CONSTRUCTION SPECIFICATIONS: Arkansas State Highway and Transportation Department Standard Specifications for Highway Construction (2014 Edition) with applicable supplemental specifications and special provisions.

DESIGN SPECIFICATIONS: AASHTO LRFD Bridge Design Specifications (2010, 5th Edition) with interim specifications.

MATERIALS AND STRENGTHS:

Class S(AE) Concrete	f'c =	4,000 psi
Reinforcing Steel (AASHTO M 31 or M322 Type A, Gr. 60)	fy =	60,000 psi
Structural Steel (AASHTO M 270, Gr. 50)	fy =	50,000 psi
Structural Steel (AASHTO M 270, Gr. 36)	fy =	36,000 psi

CONCRETE: Concrete shall be poured in the dry and all exposed corners to be chamfered ¾" unless otherwise noted. All concrete shall be Class S(AE) with a minimum 28 day compressive strength f'c = 4,000 psi.

The superstructure details shown are for use when removable deck forming is used and are the basis for measurement of Class S(AE) Concrete. See Standard Drawing No. 55005 for allowable modifications and for tolerances when Permanent Steel Bridge Deck Forms are used.

Concrete in bridge superstructure shall be placed, consolidated and screeded off for the entire pour before any concrete has taken its initial set. This may require the use of a retarding agent.

The concrete deck shall be given a tine finish in accordance with subsection 802.19 for Class 5 Tined Bridge Roadway Surface Finish. Movement of the finishing machine across new concrete shall be on planks placed on the surface and shall be prohibited for 72 hours after finishing the pour. Sufficient concrete must be placed ahead of the strike-off to fully load the beam. Use of a longitudinal screed is prohibited.

A minimum of 72 hours shall elapse between completion of the deck and the pouring of the parapet railing. Any railing pours made before the entire deck has been placed and cured must be approved by the Engineer.

REINFORCING STEEL: All reinforcing steel shall conform to AASHTO M 31 or M322 Type A, Grade 60. The reinforcing steel is to be accurately located in the forms and firmly held in place by steel wire supports, sufficient in number and size to prevent displacement during the course of construction. The wire supports will not be paid for directly, but will be considered subsidiary to the item "EPOXY COATED REINFORCING STEEL (GRADE 60)".

STRUCTURAL STEEL: All structural steel shall be AASHTO M 270, Gr. 50 unless otherwise noted and shall be paid for as "STRUCTURAL STEEL IN BEAM SPANS (M 270, GR. 50)". All structural steel except galvanized steel and steel which is completely encased in concrete shall be painted in accordance with subsection 807.75. The color of paint shall be Aluminum and shall conform to Federal Standard 595B, Color Chip No. 37200. All exposed surfaces shall be cleaned in accordance with subsection 807.84(b). Structural steel completely embedded in concrete may be AASHTO M 270, Grade 36. See Dwg. No. 53674 for cleaning requirements of external load plates of elastomeric bearings.

Drawings show general features of design only. Shop drawings shall be made in accordance with the specifications, submitted, and approval secured before fabrication is begun.

Requests for substitution of structural steel shapes shown with shapes of greater size must be submitted by the Contractor to the Engineer for approval. Steels of equal or greater strengths will be accepted only when shown on the approved shop drawings. Shapes and materials shown in the plans will be the basis of payment and no additional compensation will be made for any adjustments due to substitutions.

Beams, splice plates, bent plate diaphragms, and connection plates are considered main load carrying members and shall meet the Longitudinal Charpy V-notch Test specified in subsection 807.05. This work and material will not be paid for directly but are considered subsidiary to item "STRUCTURAL STEEL IN BEAM SPANS (M 270, GR. 50)".

All Beams shall be blocked in their true position in the shop, in groups of a minimum of three (3) sections as specified in subsection 807.54(b)(2).
The camber, length of sections, distance between bearings and openings of joints shall be measured with the beams in their true position and this information shall become part of the permanent records for this job. The component parts shall be match marked in this assembly and these marks shall be shown on the erection diagram. All beam dimensions are based on a temperature of 60° F. A tolerance of ¼" +/- is allowed for camber.

Field splice flange plates shall be cut and fabricated so that the primary direction of rolling is parallel to the direction of the main tensile and/or compressive stresses.

All welding that is to be done during fabrication of structural steel, including temporary welds, shall be detailed on the shop drawings and submitted for approval. If additional welds are required, whether temporary or permanent, a formal request with detailed drawings shall be submitted to the Engineer for approval; however, additional welds used for attaching falsework support devices or screed rail supports to the structural steel that do not exceed the limitations of subsection 802.13 will not require approval prior to construction. All welding shall conform to subsection 807.26.

Anchor bolts shall be galvanized according to section 807.07 and shall be Grade 55.

Field connection shall be bolted with high-strength bolts and shall be ¾"ø bolts unless otherwise noted. Bolts shall be placed with heads on the outside face of the exterior beam webs and on the bottom of the beam flanges. Hole for ¾"ø high-strength bolts may be 15/16"ø if a washer is supplied for use under both the nut and head of the bolt.

Diaphragms shall be installed as beams are erected, unless otherwise noted. All bolts in diaphragms and field splices shall be installed and tightened in accordance with subsection 807.71 prior to pouring the concrete deck, unless noted otherwise.

Bearings shall be seated in accordance with subsection 808.08. This work and materials are to be considered as subsidiary to the item "ELASTOMERIC BEARINGS" and will not be paid for directly.

TABLE FOR WELD

Material Thickness of Thicker Part Joined (Inches)	Minimum Size of Fillet Weld (Inches)	Single Pass Weld Must Be Used
To ¾" Inclusive	¼"	
Over ¾"	5/16"	

NOTE: When a fillet weld size, as shown on the plans, is larger than the minimum, the first pass shall be that specified for minimum size of fillet weld.

(1) If permanent steel bridge deck forms are used, the fabricator shall clip the plate as necessary to accomodate the deck form support.

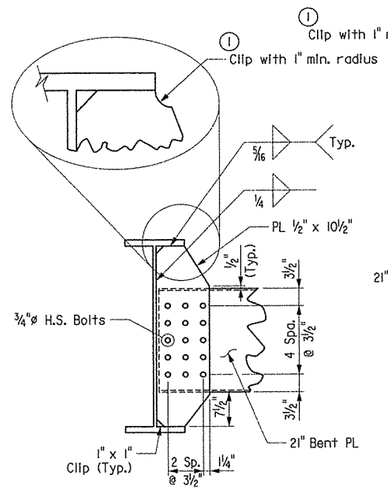

DIAPHRAGM CONNECTION A

Scale: 1½" = 1'-0"
(Typ. Exterior Beams)
(Unless Noted Otherwise)

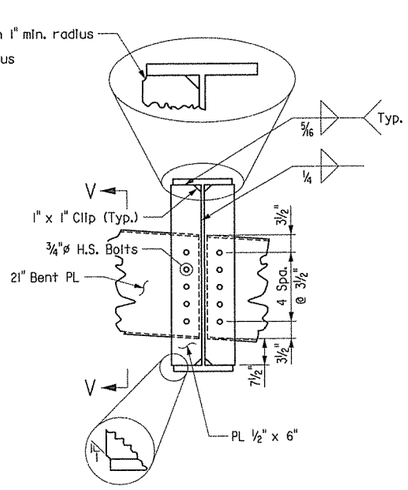

DIAPHRAGM CONNECTION B

Scale: 1½" = 1'-0"
(Typ. @ Interior Beams @ Diaphragms)
(Unless Noted Otherwise)

Note: Stop weld ¼" to 1" from end of clip (Typ.)

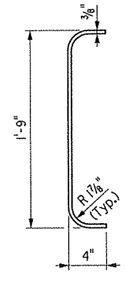

Typ. cross-section for all 21" bent plate diaphragms.

SECTION V-V

Scale: 1½" = 1'-0"

STATE OF ARKANSAS
LARRY W. MILLER
REGISTERED PROFESSIONAL ENGINEER
No. 11339
3-24-14

BRIDGE ENGINEER

SHEET 2 OF 4
COMMON DETAILS OF CONTINUOUS COMPOSITE W-BEAM UNIT
MAIN STREET

ROUTE 67 SEC. 10

ARKANSAS STATE HIGHWAY COMMISSION
LITTLE ROCK, ARK.

DRAWN BY: DLM DATE: 01-13
CHECKED BY: GS DATE: 03-01-13
DESIGNED BY: DLM DATE: 01-13
FILENAME: b061276m2_s7.dgn
SCALE: As Shown

BRIDGE NO. A&B7283 DRAWING NO. 53657

DATE REVISED	DATE FILMED	DATE REVISED	DATE FILMED	FED. ROAD DIST. NO.	STATE	FED. AID PROJ. NO.	SHEET NO.	TOTAL SHEETS
				6	ARK.			
				JOB NO.		061276	254	438
				(1) A&B7283		SPAN DETAILS		53658

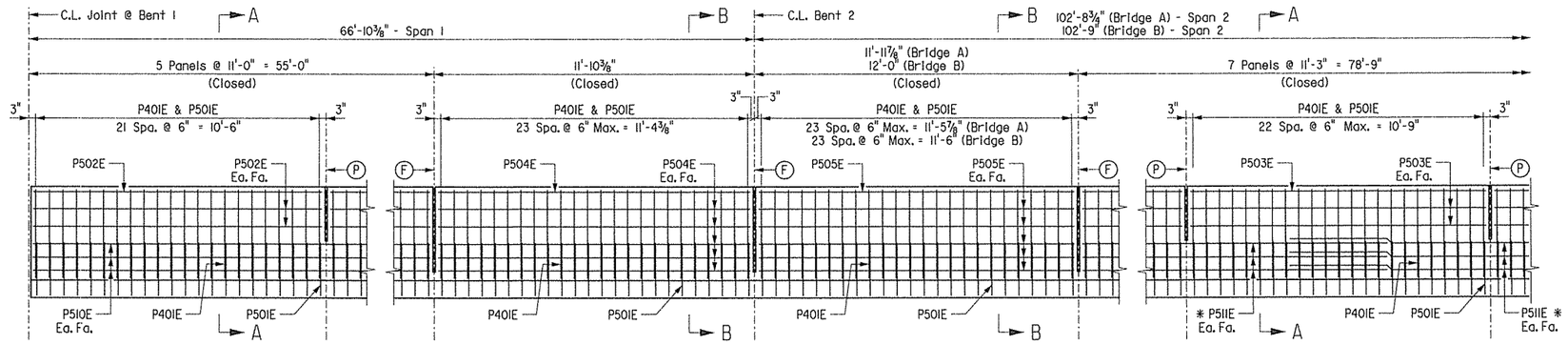

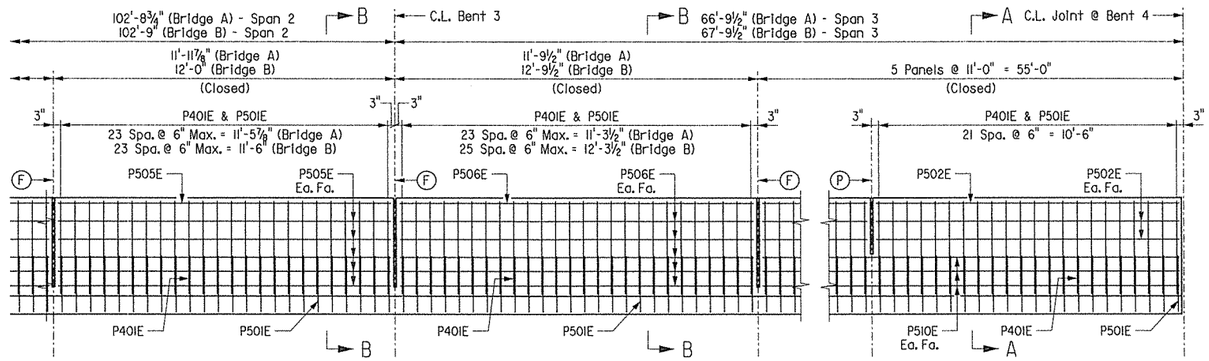

DETAILS OF PARAPET RAIL - HIGH SIDE OF BRIDGE

Scale: ⅜" = 1'-0"

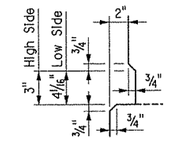

DETAIL X

No Scale

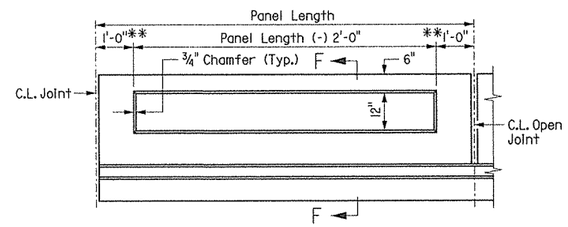

PARAPET ENHANCEMENT DETAILS

Scale: ½" = 1'-0"

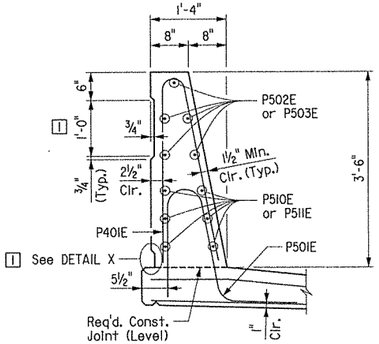

SECTION A-A

Scale: ¾" = 1'-0"

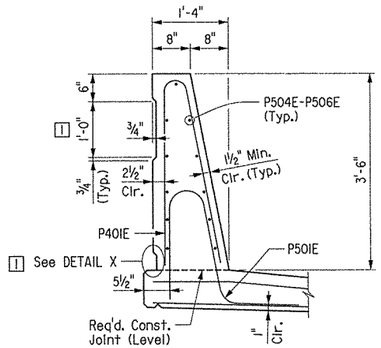

SECTION B-B

Scale: ¾" = 1'-0"

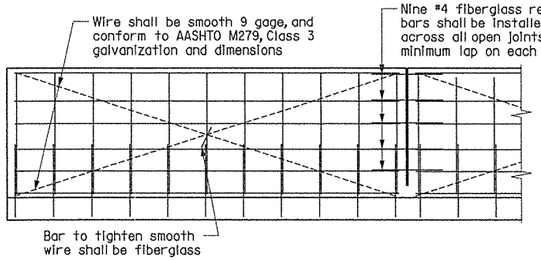

All panels shall be braced as shown to prevent racking. All open joints shall be sawed as soon as practical to a minimum width of ¼". To control cracking before sawing all joints must be grooved before the concrete is set. Sawing of the joints must be controlled so it will follow the grooved joint.

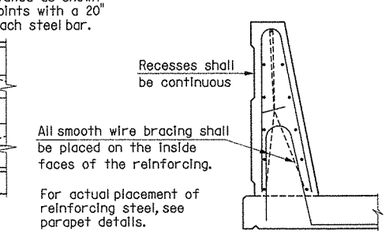

The extruded parapet shall conform to the horizontal and vertical lines shown on the plans or as directed by the Engineer and shall present a smooth, uniform appearance and texture. Exposed surfaces may be given a light brush finish or a Class 3 Textured Coating Finish in place of Class 2 Rubbed Finish.

DETAILS OF OPTIONAL SLIPFORMING OF CONCRETE PARAPET RAIL

No Scale

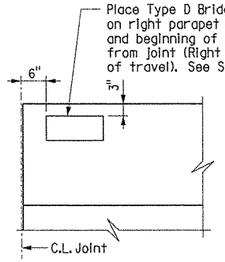

NAME PLATE DETAIL

No Scale

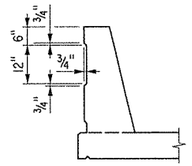

SECTION F-F

Scale: ½" = 1'-0"

STATE OF ARKANSAS
REGISTERED PROFESSIONAL ENGINEER
No. 13339
3-24-14
LARRY W. MILLER
BRIDGE ENGINEER

(P) C.L. Partial Depth Parapet Joint (¼" to 1" max.). Stop 1'-6" from top of slab.

(F) C.L. Full Depth Parapet Joint (¼" to 1" max.). Stop 4" from top of slab.

* Minimum splice length for P511E bars = 3'-7"

** Panel Inset may be made continuous if slip forms are used.

[1] Parapet enhancement and Detail X are not required on the median parapets.

All dimensions shown are taken along gutterline of bridge.

For Bar List, see Dwg. No. 53655 & 53671.

SHEET 3 OF 4
COMMON DETAILS OF CONTINUOUS COMPOSITE W-BEAM UNIT
MAIN STREET

ROUTE 67 SEC. 10

ARKANSAS STATE HIGHWAY COMMISSION

LITTLE ROCK, ARK.

DRAWN BY: DLM DATE: 01-13 FILENAME: b061276m2_s8.dgn
CHECKED BY: GS DATE: 03-01-13 SCALE: As Shown
DESIGNED BY: DLM DATE: 01-13

BRIDGE NO. A&B7283 DRAWING NO. 53658

DATE REVISED	DATE FILMED	DATE REVISED	DATE FILMED	FED. ROAD DIST. NO.	STATE	FED. AID PROJ. NO.	SHEET NO.	TOTAL SHEETS
				6	ARK.			
				JOB NO.		061276	255	438
				(1) A&B7283		SPAN DETAILS		53659

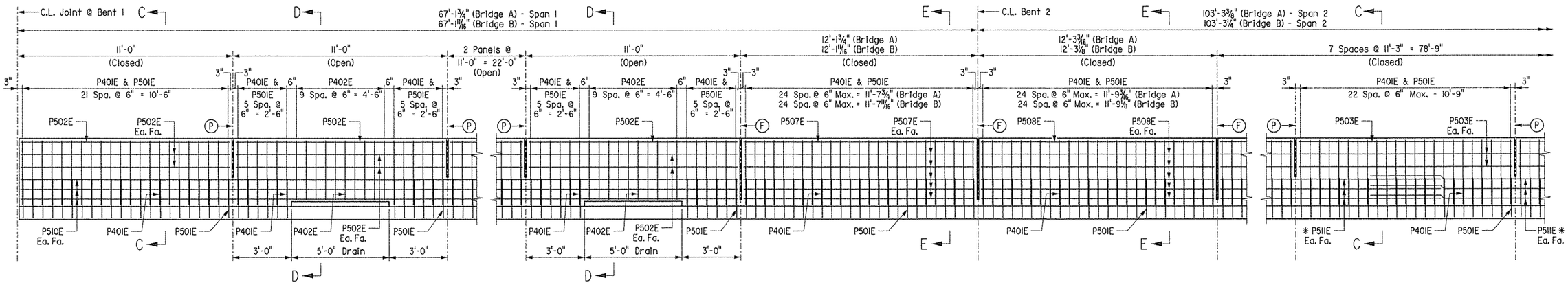

DETAILS OF PARAPET RAIL - LOW SIDE OF BRIDGE

Scale: ⅜" = 1'-0"

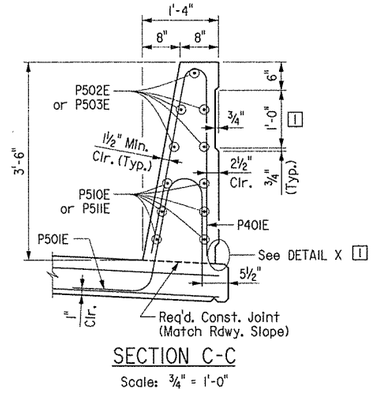

SECTION C-C

Scale: ¾" = 1'-0"

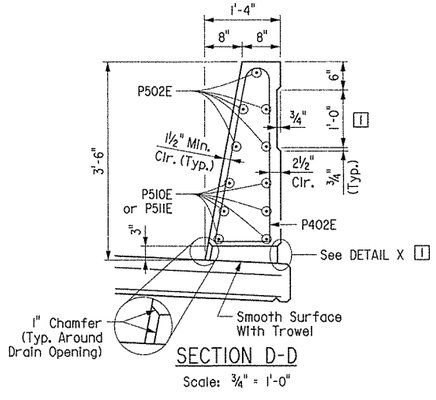

SECTION D-D

Scale: ¾" = 1'-0"

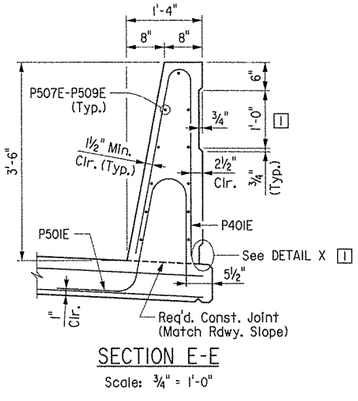

SECTION E-E

Scale: ¾" = 1'-0"

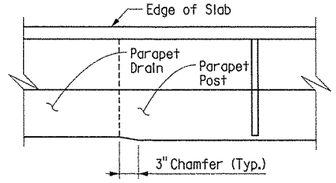

PLAN OF RAIL POST CHAMFER

(Typ. for Open Parapet Panels Only)

1" = 1'-0"

(P) C.L. Partial Depth Parapet Joint (¼" to 1" max.). Stop 1'-6" from top of slab.

(F) C.L. Full Depth Parapet Joint (¼" to 1" max.). Stop 4" from top of slab.

* Minimum splice length for P511E bars = 3'-7"

(1) Parapet enhancement and Detail X are not required on the median parapets.

Note: All dimensions shown are taken along gutterline of bridge.

Note: For Bar List, see Dwg. No. 53655 & 53671.

Note: For DETAIL X, see Dwg. No. 53658.

Note: For DETAILS OF OPTIONAL SLIPFORMING OF CONCRETE PARAPET RAIL, see Dwg. No. 53658.

STATE OF ARKANSAS
LARRY W. MILLER
REGISTERED PROFESSIONAL ENGINEER
No. 11339
8-19-13

BRIDGE ENGINEER

SHEET 4 OF 4
COMMON DETAILS OF CONTINUOUS COMPOSITE W-BEAM UNIT MAIN STREET

ROUTE 67 SEC. 10

ARKANSAS STATE HIGHWAY COMMISSION

LITTLE ROCK, ARK.

DRAWN BY: DLM DATE: 01-13
CHECKED BY: GS DATE: 03-01-13
DESIGNED BY: DLM DATE: 01-13

FILENAME: b061276m2_s9.dgn
SCALE: As Shown

BRIDGE NO. A&B7283 DRAWING NO. 53659

DATE REVISED	DATE FILMED	DATE REVISED	DATE FILMED	FED. ROAD DIST. NO.	STATE	FED. AID PROJ. NO.	SHEET NO.	TOTAL SHEETS
				6	ARK.			
				JOB NO.		061276	256	438
				(1) B7283		END BENT 1 DETAILS		53660

For GENERAL NOTES FOR SUBSTRUCTURE, see Dwg. No. 53662.

For VIEW A-A, VIEW B-B, VIEW C-C and VIEW D-D, see Dwg. No. 53661.

For SECTION E-E, see Dwg. No. 53661.

For additional information, see LAYOUT on Dwg. No. 53636.

[1] Adjust spacing of D601E bars as necessary to provide 3" clear from the longitudinal construction joint between the approach slab and gutters.

[2] Adjust as necessary to provide 2" clear to end of cap and outside face of wing.

Class 1 Protective Surface Treatment shall be applied to the roadway face and top of the end bent rail and the top of the backwall.

* Dimension shown are to C.L. Joint

** Measured Along Gutterline

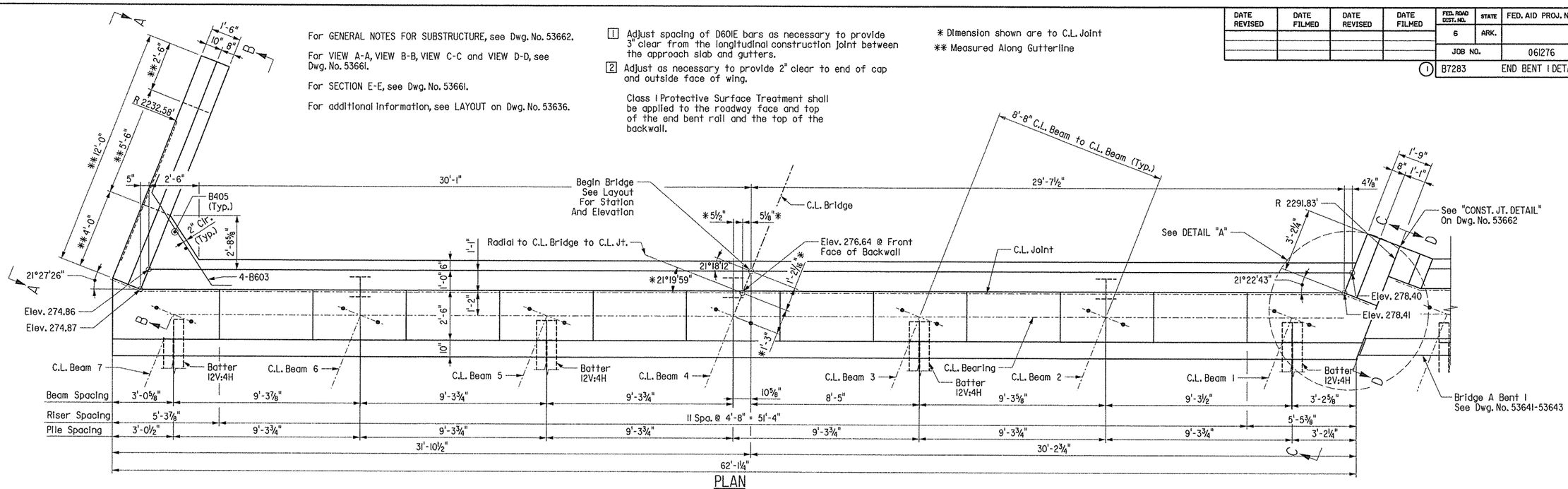

PLAN

Scale: ⅜" = 1'-0"

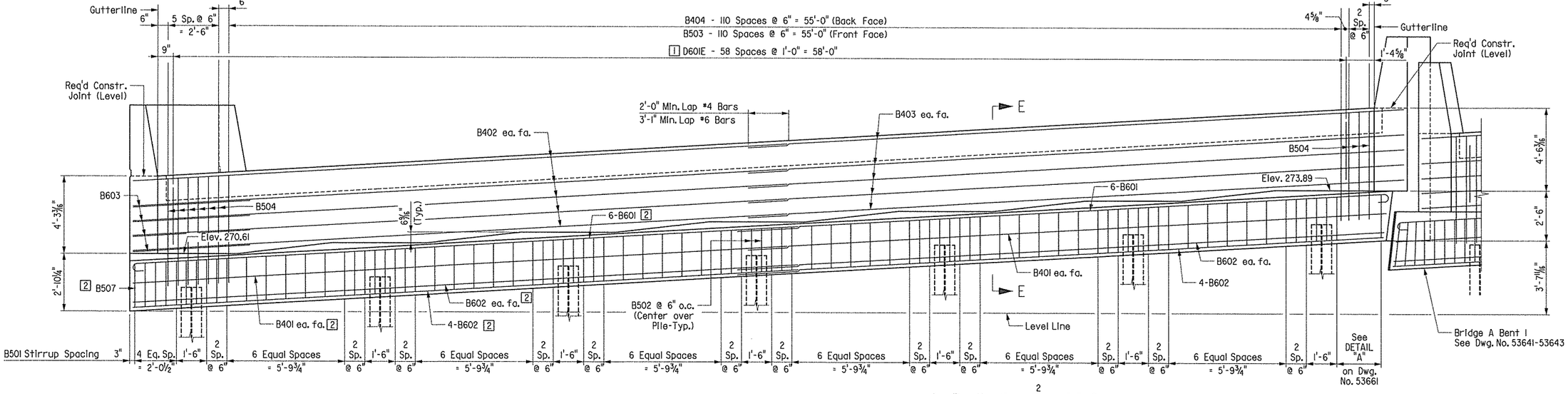

ELEVATION

Scale: ⅜" = 1'-0"
(Looking Back)

BEAM	"A"
1	21°06'37"
2	21°11'40"
3	21°16'46"
4	21°21'54"
5	21°27'04"
6	21°32'17"
7	21°37'32"

"M" = 11¼"

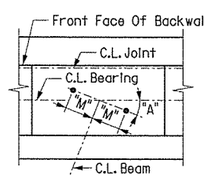

TYPICAL ANCHOR BOLT LAYOUT

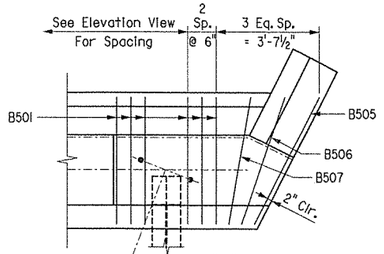

DETAIL "A"

Scale: ⅜" = 1'-0"

STATE OF ARKANSAS
Larry W. Miller
REGISTERED PROFESSIONAL ENGINEER
No. 11339
8-19-13
LARRY W. MILLER

BRIDGE ENGINEER

BRIDGE B
SHEET 1 OF 2
DETAILS OF BENT 1
MAIN STREET

ROUTE 67 SEC. 10

ARKANSAS STATE HIGHWAY COMMISSION

LITTLE ROCK, ARK.

DRAWN BY: LM DATE: 01-13

CHECKED BY: GS DATE: 03-01-13

DESIGNED BY: LM DATE: 01-13

FILENAME: b061276b2_bll.dgn

SCALE: As Shown

BRIDGE NO. B7283

DRAWING NO. 53660

** Bend R401 in filed as necessary to match rail line. Pin dia.=4".

* Parapet Enhancement shall be made continuous if slip forms are used on bridge parapet rail.

For GENERAL NOTES FOR SUBSTRUCTURE, see Dwg. No. 53662.

For additional information, see LAYOUT on Dwg. No. 53636.

For DETAIL "X", DETAIL "Z", SECTION "R-R", SECTION "S-S", SECTION "T-T", SECTION "U-U" and SECTION "W-W", see Dwg. No. 53662.

DATE REVISED	DATE FILMED	DATE REVISED	DATE FILMED	FED. ROAD DIST. NO.	STATE	FED. AID PROJ. NO.	SHEET NO.	TOTAL SHEETS
				6	ARK.			
				JOB NO.		061276	257	438
				(1) B7283		END BENT 1 DETAILS		53661

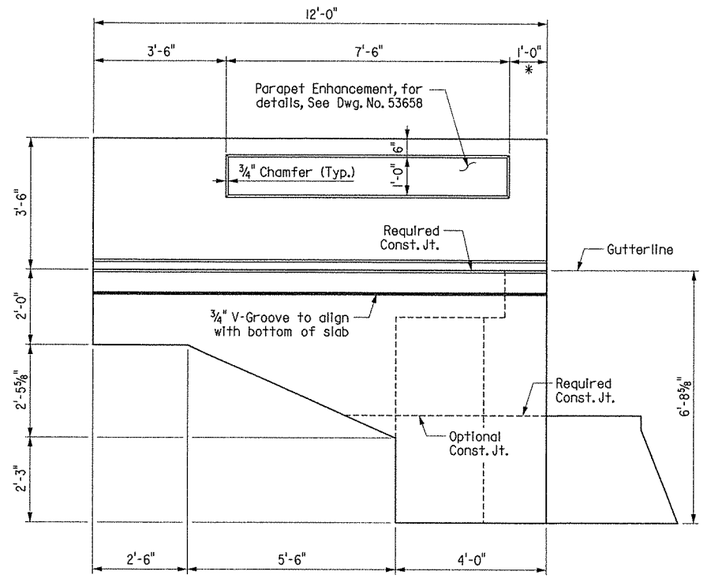

VIEW A-A

Scale: ½" = 1'-0"

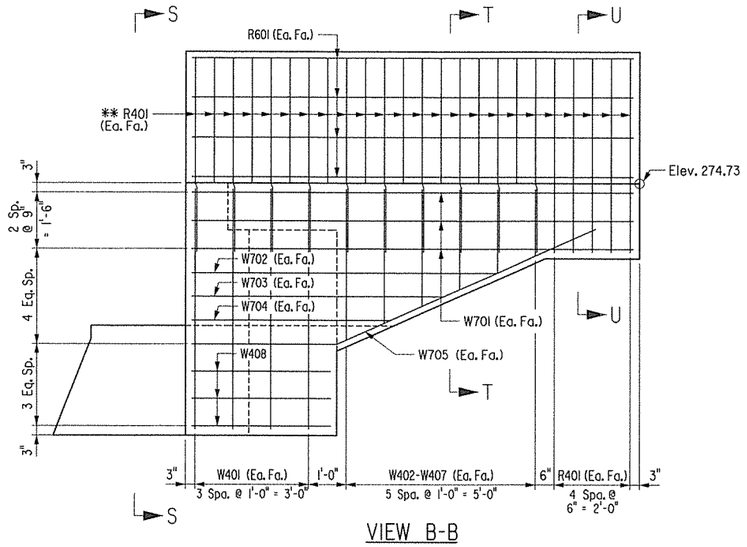

VIEW B-B

Scale: ½" = 1'-0"

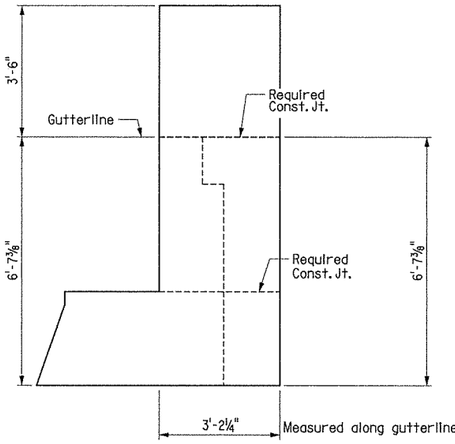

VIEW C-C

Scale: ½" = 1'-0"

NOTE: Bars designated with an "E" suffix shall be epoxy coated.

BAR LIST - BENT 1

Mark	No. Req'd	Length	Pin Dia.
B401	4	32'-7"	Str.
B402	10	33'-7"	2"
B403	10	33'-10"	2"
B404	111	5'-4"	Str.
B405	2	5'-2"	Str.
B501	73	13'-1"	2½"
B502	14	8'-1"	2½"
B503	111	8'-3"	2½"
B504	9	11'-2"	2½"
B505	1	14'-1"	2½"
B506	1	13'-8"	2½"
B507	2	13'-3"	2½"
B601	12	34'-6"	4½"
B602	12	33'-2"	Str.
B603	4	7'-7"	4½"
B604	14	2'-10"	4½"
D601E	59	5'-9"	4½"
R401	56	5'-3"	Str.
R601	8	11'-8"	Str.
R602	8	2'-10"	Str.
W401	8	6'-4"	Str.
W402 to W407	2 ea.	4'-0" to 1'-9"	Str.
W408	3	8'-8"	2"
W409	8	6'-3"	Str.
W410	12	2'-10"	Str.
W701	6	11'-8"	Str.
W702	2	8'-1"	Str.
W703	2	6'-8"	Str.
W704	2	5'-3"	Str.
W705	2	11'-3"	2"

BENDING DIAGRAMS
(Dimensions are out to out of bars)

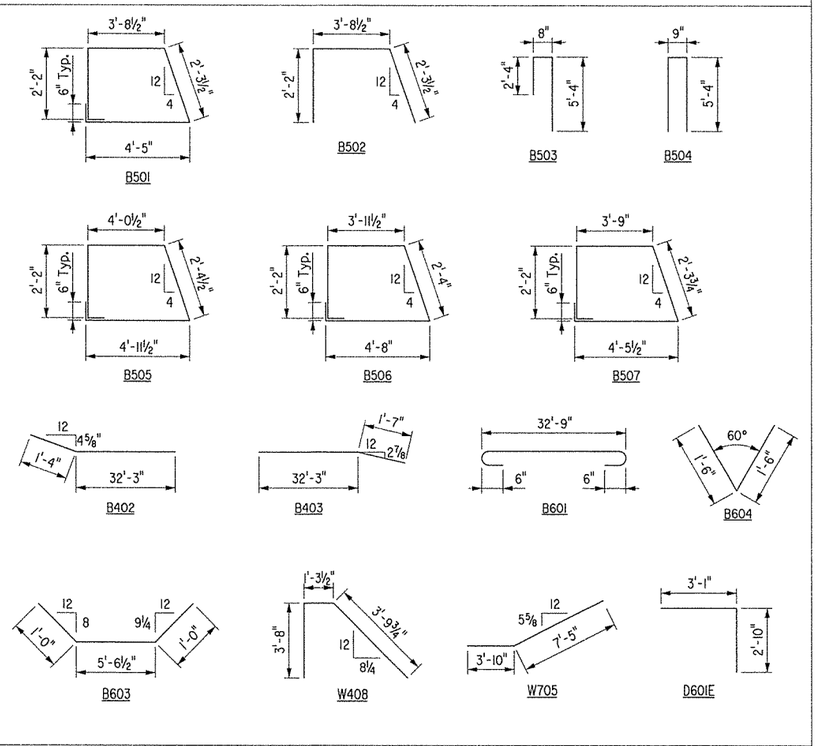

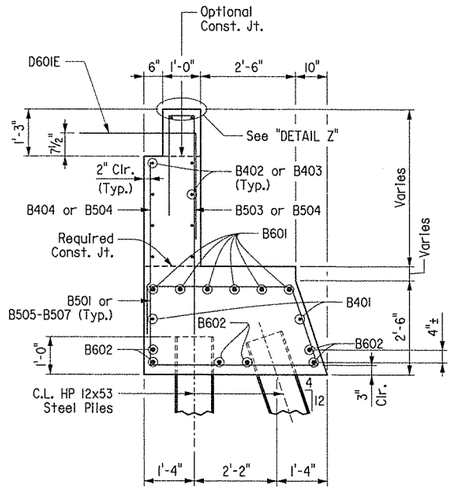

SECTION E-E

Scale: ½" = 1'-0"

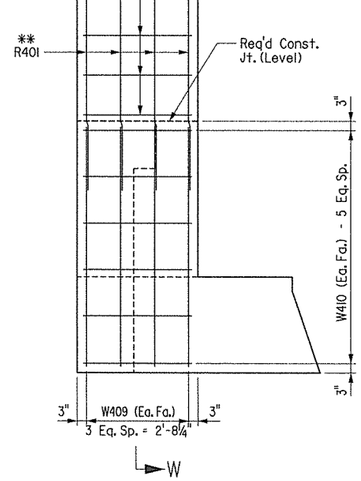

VIEW D-D

Scale: ½" = 1'-0"

STATE OF ARKANSAS
Larry W. Miller
REGISTERED PROFESSIONAL ENGINEER
No. 11339
8-19-13
LARRY W. MILLER
BRIDGE ENGINEER

BRIDGE B
SHEET 2 OF 2
DETAILS OF BENT 1
MAIN STREET

ROUTE 67 SEC. 10

ARKANSAS STATE HIGHWAY COMMISSION

LITTLE ROCK, ARK.

DRAWN BY: DLM DATE: 02-13

CHECKED BY: GS DATE: 03-01-13

DESIGNED BY: DLM DATE: 02-13

FILENAME: b061276b2_bl2.dgn

SCALE: As Shown

BRIDGE NO. B7283

DRAWING NO. 53661

DATE REVISED	DATE FILMED	DATE REVISED	DATE FILMED	FED. ROAD DIST. NO.	STATE	FED. AID PROJ. NO.	SHEET NO.	TOTAL SHEETS
				6	ARK.			
				JOB NO.		061276	258	438
				(1) B7283		END BENT DETAILS		53662

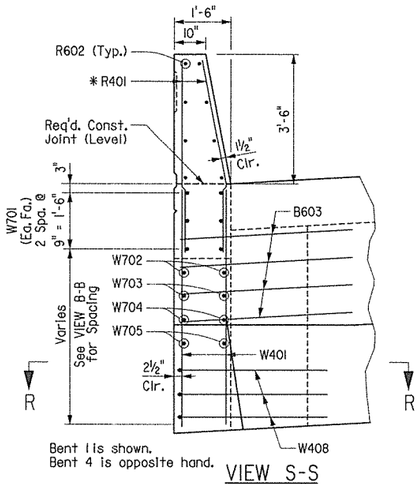

Bent 1 is shown.
Bent 4 is opposite hand.

VIEW S-S

Scale: ½" = 1'-0"

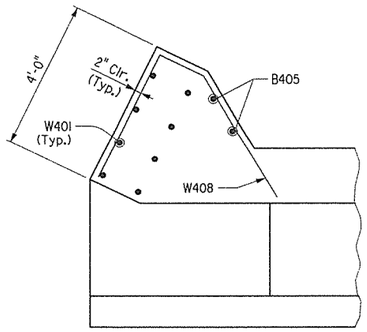

(BENT 1)

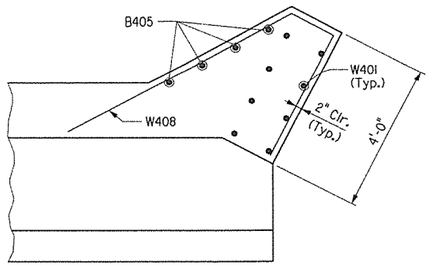

(BENT 4)

SECTION R-R

Scale: ½" = 1'-0"

GENERAL NOTES FOR SUBSTRUCTURE

All concrete shall be Class "S" with a minimum 28 day compressive strength f'c = 3,500 psi and shall be poured in the dry. All exposed corners to be chamfered ¾" unless otherwise noted.

All structural steel shall be AASHTO M 270, Grade 50 unless otherwise noted and shall be paid for as "STRUCTURAL STEEL IN BEAM SPANS (M 270, GR. 50)". All exposed surfaces shall be cleaned and painted in accordance with Section 807 and will be paid for under the pay item "PAINTING STRUCTURAL STEEL". The color of paint shall be Aluminum and shall match Fed. Std. 595B, Color Chip No. 37200.

All reinforcing steel shall conform to AASHTO M 31 or M322 Type A, Grade 60 (yield strength = 60,000 psi).

The backwall above the required construction joint shall not be poured until the beams are in place. Backwall may be placed prior to placing the adjacent concrete deck only if the optional backwall construction joint is used. See "DETAILS FOR BLOCKING EXPANSION JOINT DEVICE" on Dwg. No. 53672 for additional information.

Top reinforcing bars in cap shall be properly placed to avoid interference with anchor bolts or sheet metal sleeves.

* Bend R401 in field as necessary to match rail line. Pin dia.=4".

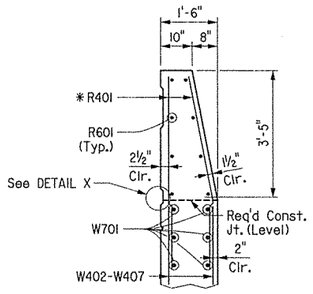

SECTION T-T

Scale: ½" = 1'-0"

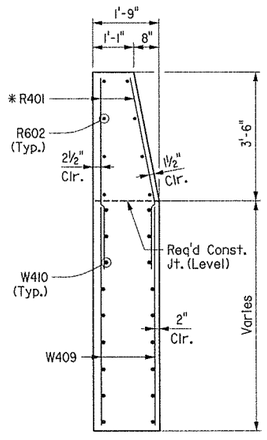

SECTION W-W

Scale: ½" = 1'-0"

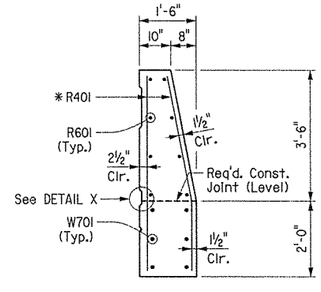

SECTION U-U

Scale: ½" = 1'-0"

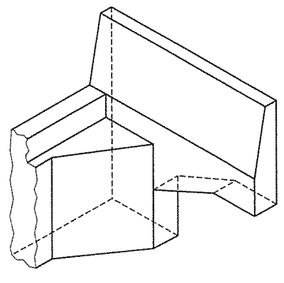

THREE DIMENSIONAL VIEW OF WING & RAIL

No Scale

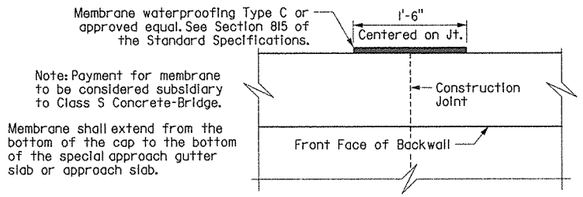

CONST. JOINT DETAIL

No Scale

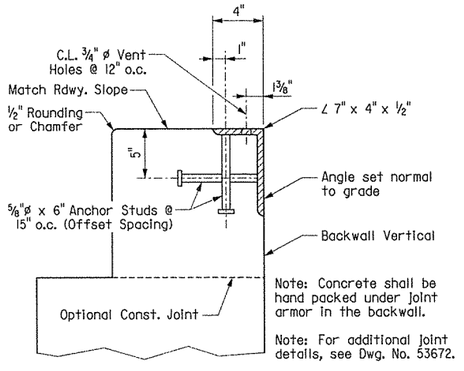

DETAIL Z

Scale: 2" = 1'-0"

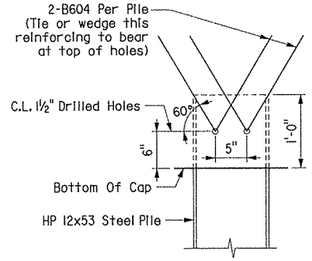

DETAIL AT PILE TOP

No Scale

Drilled holes will not be paid for directly but shall be considered incidental to the item "STEEL PILING (HP12x53)".

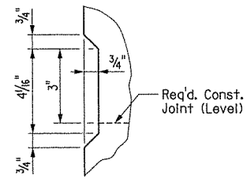

DETAIL X

No Scale

STATE OF ARKANSAS
REGISTERED PROFESSIONAL ENGINEER
No. 13539
3-24-14
LARRY W. MILLER
BRIDGE ENGINEER

BRIDGE B
COMMON END BENT DETAILS
MAIN STREET

ROUTE 67 SEC. 10

ARKANSAS STATE HIGHWAY COMMISSION

LITTLE ROCK, ARK.

DRAWN BY: DLM DATE: 02-13
CHECKED BY: GS DATE: 03-01-13
DESIGNED BY: DLM DATE: 02-13
FILENAME: b061276b2_bl3.dgn
SCALE: As Shown

BRIDGE NO. B7283 DRAWING NO. 53662

DATE REVISED	DATE FILMED	DATE REVISED	DATE FILMED	FED. ROAD DIST. NO.	STATE	FED. AID PROJ. NO.	SHEET NO.	TOTAL SHEETS
				6	ARK.			
				JOB NO.		061276	259	438
				(1) B7283		INTERIOR BENT DETAILS		53663

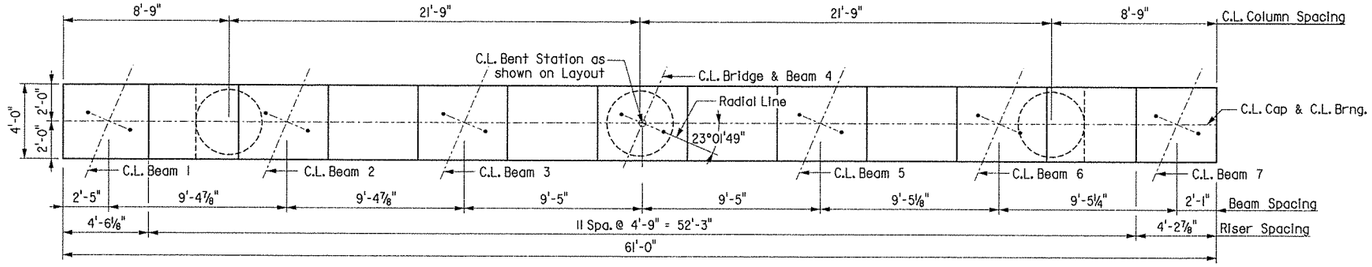

PLAN
¼" = 1'-0"

BEAM	"A"
1	22°45'14"
2	22°50'43"
3	22°56'15"
4	23°01'50"
5	23°07'27"
6	23°13'07"
7	23°18'50"

"M" = 15½"

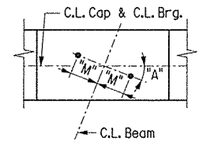

TYPICAL ANCHOR BOLT LAYOUT
No Scale

Lapped splices will not be permitted for the longitudinal column reinforcing. The Contractor may submit a request to the Engineer for approval to use mechanical couplers at mid-height of the column. All work and materials to use mechanical couplers will not be paid for directly but will be considered subsidiary to the item "Reinforcing Steel - Bridge (Grade 60)".

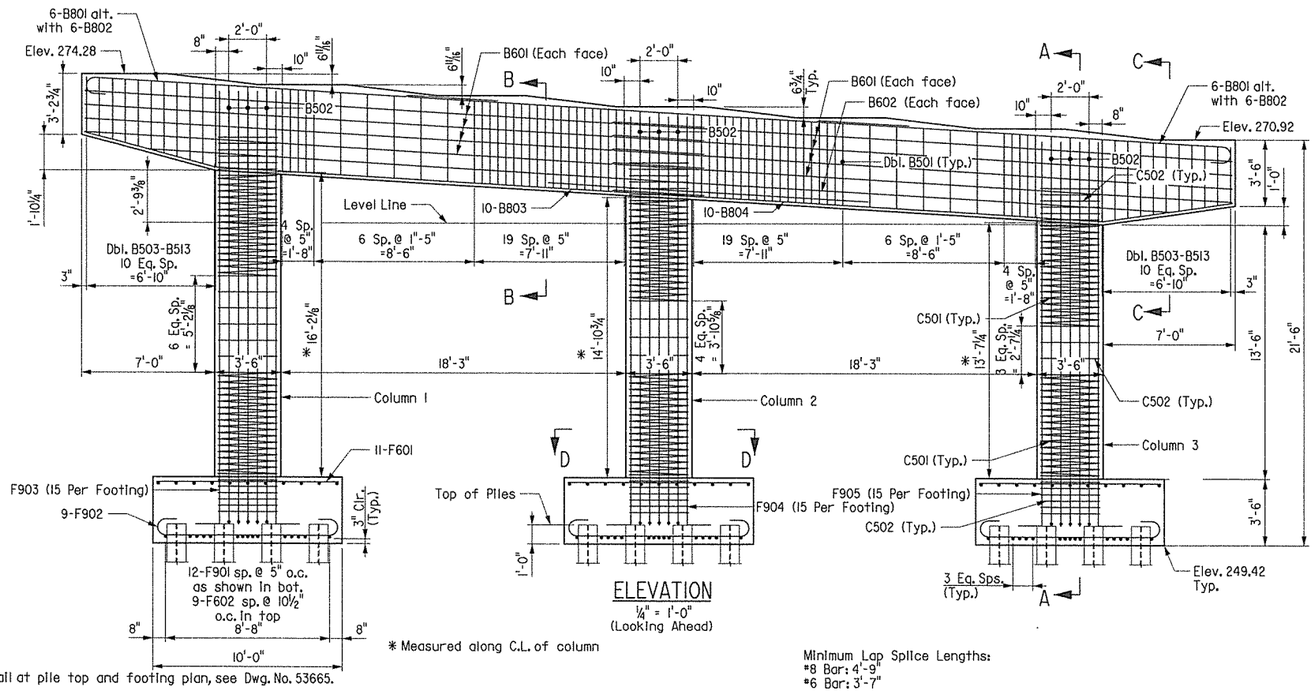

ELEVATION
¼" = 1'-0"
(Looking Ahead)

* Measured along C.L. of column

For sections, detail at pile top and footing plan, see Dwg. No. 53665.

For substructure general notes, see Dwg. No. 53662.

Minimum Lap Splice Lengths:
#8 Bar: 4'-9"
#6 Bar: 3'-7"

BAR LIST

Mark	Number Required	Dim. "A"	Length	Pin Dia.
B501	120	--	13'-7"	2½"
B502	9	--	11'-10"	2½"
B503 to B513	4 ea.	--	11'-2" to 13'-9"	2½"
B601	16	--	32'-2"	Str.
B602	2	--	54'-2"	Str.
B801	12	21'-11"	22'-10"	6"
B802	12	43'-8"	44'-7"	6"
B803	10	7'-1"	33'-0"	6"
B804	10	6'-11"	32'-10"	6"
C501	6	--	183'-8"	3"
C502	61	--	12'-2"	3"
F601	33	--	9'-6"	Str.
F602	33	--	11'-6"	Str.
F603	48	--	2'-10"	4½"
F901	45	11'-6"	14'-0"	9"
F902	27	9'-6"	12'-0"	9"
F903	15	22'-11"	24'-3"	9"
F904	15	21'-7"	22'-11"	9"
F905	15	20'-4"	21'-8"	9"

Bending Diagrams (Dimensions are out to out of bars.)

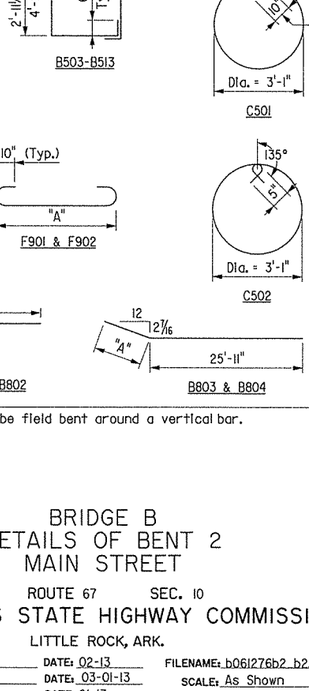

1 At each end of spiral. Hook may be field bent around a vertical bar.

STATE OF ARKANSAS
Larry R. Miller
REGISTERED PROFESSIONAL ENGINEER
No. 11339
8-19-13
LARRY R. MILLER
BRIDGE ENGINEER

BRIDGE B
DETAILS OF BENT 2
MAIN STREET

ROUTE 67 SEC. 10

ARKANSAS STATE HIGHWAY COMMISSION
LITTLE ROCK, ARK.

DRAWN BY: AM DATE: 02-13
CHECKED BY: GS DATE: 03-01-13
DESIGNED BY: LM DATE: 01-13
FILENAME: b061276b2_b2.dgn
SCALE: As Shown

BRIDGE NO. B7283 DRAWING NO. 53663

DATE REVISED	DATE FILMED	DATE REVISED	DATE FILMED	FED. ROAD DIST. NO.	STATE	FED. AID PROJ. NO.	SHEET NO.	TOTAL SHEETS
				6	ARK.			
				JOB NO.		061276	260	438
				(1) B7283		INTERIOR BENT DETAILS		53664

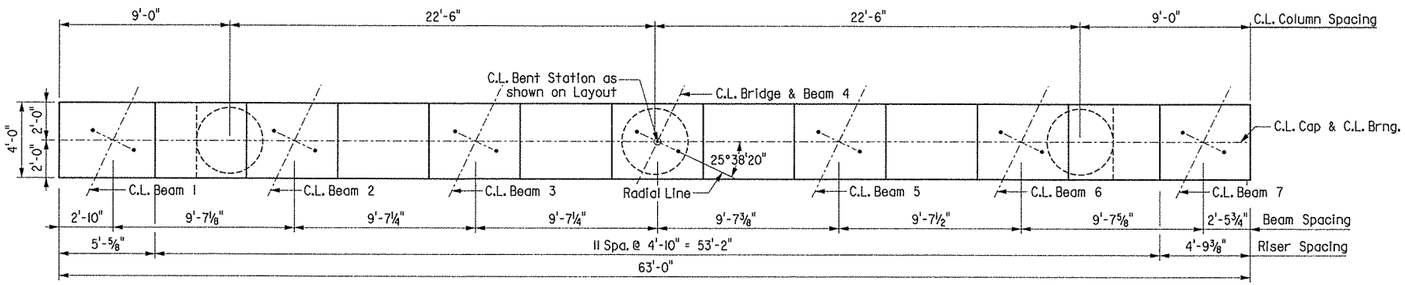

PLAN
¼" = 1'-0"

GIRDER	"A"
1	25°19'37"
2	25°25'49"
3	25°32'04"
4	25°38'22"
5	25°44'43"
6	25°51'06"
7	25°57'33"

"M" =15½"

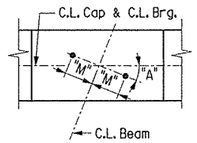

TYPICAL ANCHOR BOLT LAYOUT
No Scale

Lapped splices will not be permitted for the longitudinal column reinforcing. The Contractor may submit a request to the Engineer for approval to use mechanical couplers at mid-height of the column. All work and materials to use mechanical couplers will not be paid for directly but will be considered subsidiary to the item "Reinforcing Steel - Bridge (Grade 60)".

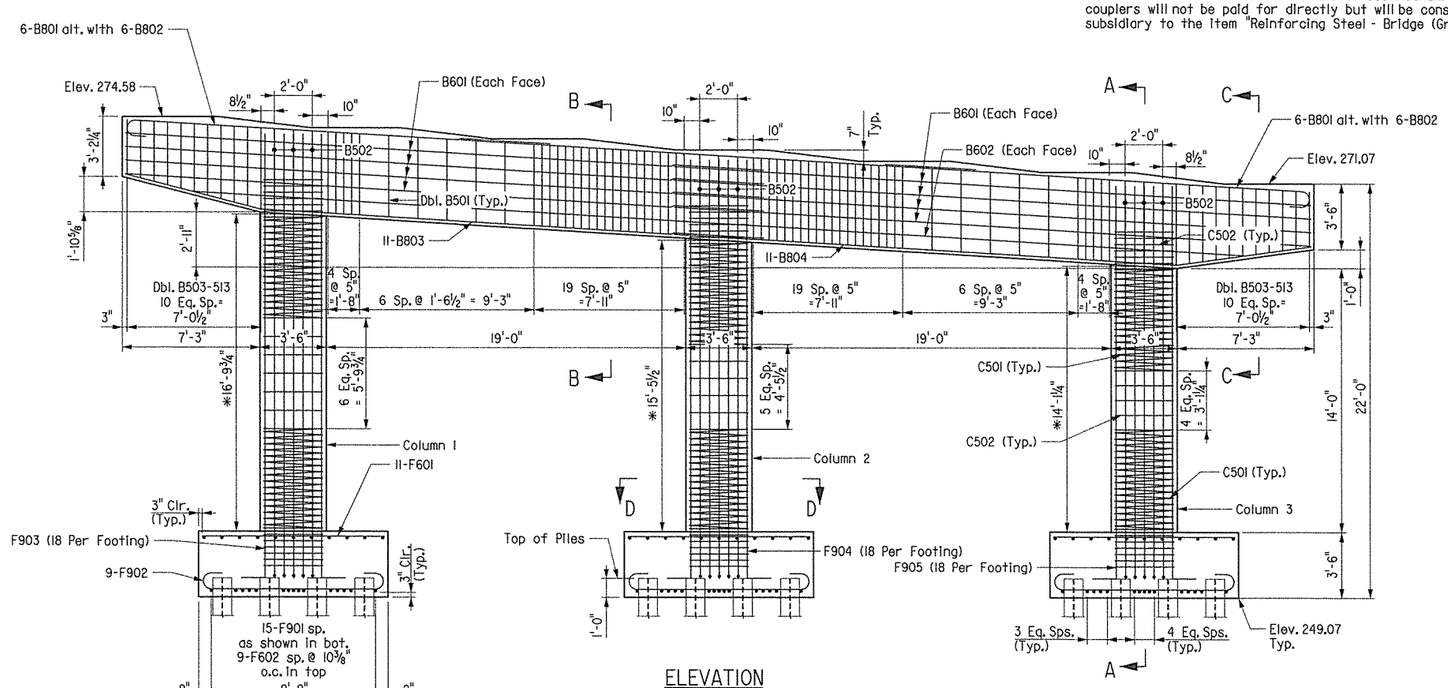

For sections, detail at pile top and footing plan, see Dwg. No. 53665.

For substructure general notes, see Dwg. No. 53662.

Minimum Lap Splice Lengths:
#8 Bar: 4'-9"
#6 Bar: 3'-7"

BAR LIST

Mark	Number Required	Dim. "A"	Length	Pin Dia.
B501	120	--	13'-7"	2½"
B502	9	--	11'-10"	2½"
B503 to B513	4 ea.	--	11'-1" to 13'-9"	2½"
		--		
B601	16	--	33'-3"	Str.
B602	2	--	55'-9"	Str.
B801	12	22'-11"	23'-10"	6"
B802	12	44'-8"	45'-7"	6"
B803	11	7'-4"	34'-0"	6"
B804	11	7'-2"	33'-10"	6"
C401	24	--	46'-2"	3"
C402	1	--	39'-7"	3"
C403	1	--	29'-11"	3"
C404	1	--	10'-9"	3"
F601	33	--	9'-6"	Str.
F602	33	--	11'-6"	Str.
F603	48	--	2'-10"	4½"
F901	45	11'-6"	14'-0"	9"
F902	27	9'-6"	12'-0"	9"
F903	18	23'-6"	24'-10"	9"
F904	18	22'-3"	23'-7"	9"
F905	18	20'-10"	22'-2"	9"

Bending Diagrams (Dimensions are out to out of bars.)

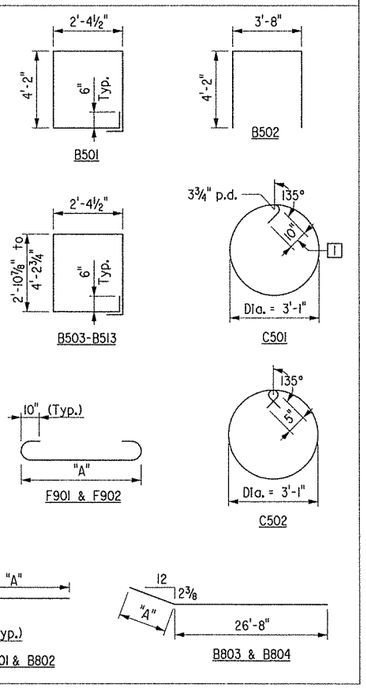

[1] At each end of spiral. Hook may be field bent around a vertical bar.

STATE OF ARKANSAS
Larry W. Miller
REGISTERED PROFESSIONAL ENGINEER
No. 11339
8-19-13
LARRY W. MILLER
BRIDGE ENGINEER

BRIDGE B
DETAILS OF BENT 3
MAIN STREET

ROUTE 67 SEC. 10

ARKANSAS STATE HIGHWAY COMMISSION
LITTLE ROCK, ARK.

DRAWN BY: AM DATE: 02-13
CHECKED BY: GS DATE: 03-01-13
DESIGNED BY: LM DATE: 01-13
FILENAME: b061276b2_b3l.dgn
SCALE: As Shown

BRIDGE NO. B7283 DRAWING NO. 53664

DATE REVISED	DATE FILMED	DATE REVISED	DATE FILMED	FED. ROAD DIST. NO.	STATE	FED. AID PROJ. NO.	SHEET NO.	TOTAL SHEETS
				6	ARK.			
				JOB NO.		061276	261	438
				(1) B7283		INTERIOR BENT DETAILS		53665

NOTES FOR SPIRAL REINFORCING

Spiral reinforcing shall be plain round or deformed steel bars meeting the requirements of AASHTO M31 or M322 Type A (Grade 60) or shall be cold drawn wire meeting the requirements of AASHTO M32 or M225 (Grade 70) with a minimum diameter of 0.625".

Spiral reinforcement shall be paid for at the contract unit price bid per pound for "Reinforcing Steel-Bridge (Grade 60)". No additional payment shall be made for spacers, additional splices, or bracing needed for assembly, shipping, handling, or erecting.

Ends of spirals shall be terminated with 1½ turns and a 135° hook with a 10" tail around a vertical bar.

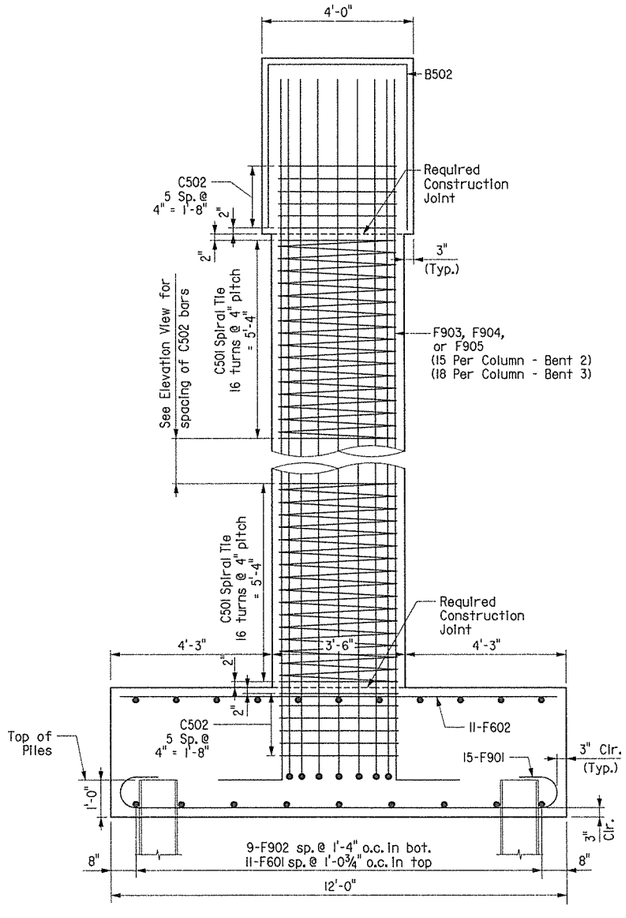

SECTION A-A

½" = 1'-0"

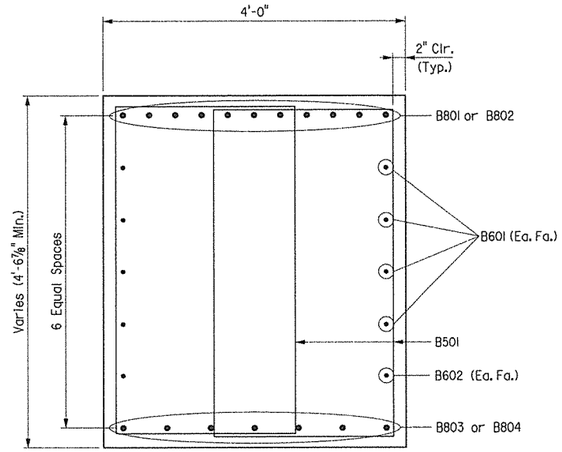

SECTION B-B

1" = 1'-0"

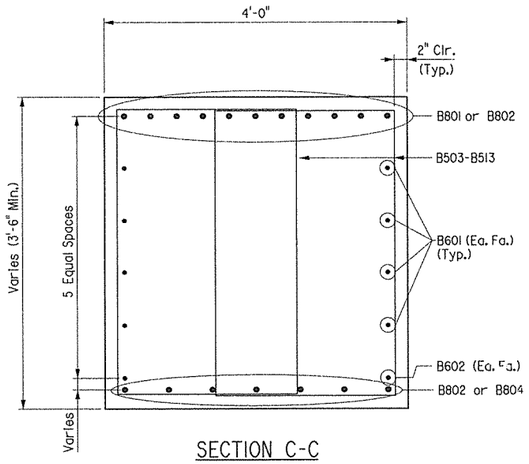

SECTION C-C

1" = 1'-0"

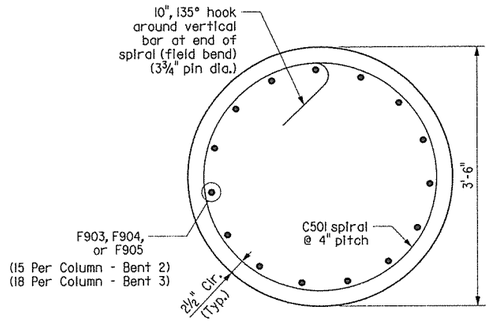

SECTION D-D

1" = 1'-0"

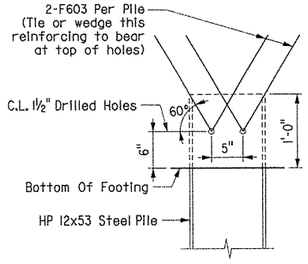

DETAIL AT PILE TOP

No Scale

Drilled holes will not be paid for directly but shall be considered incidental to the item "STEEL PILING (HP12x53)".

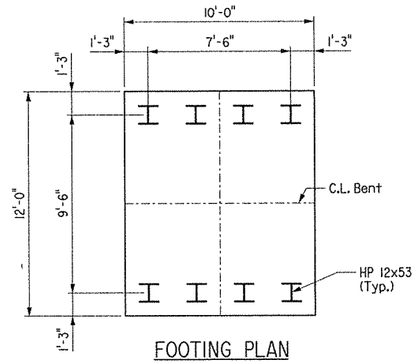

FOOTING PLAN

¼" = 1'-0"

STATE OF ARKANSAS
REGISTERED PROFESSIONAL ENGINEER
No. 10339
3-24-14
LARRY W. MILLER
BRIDGE ENGINEER

BRIDGE B
COMMON INTERIOR BENT DETAILS
MAIN STREET

ROUTE 67 SEC. 10

ARKANSAS STATE HIGHWAY COMMISSION

LITTLE ROCK, ARK.

DRAWN BY: AM DATE: 02-13 FILENAME: b061276b2_b32.dgn

CHECKED BY: GS DATE: 03-01-13 SCALE: As Shown

DESIGNED BY: LM DATE: 01-13

BRIDGE NO. B7283 DRAWING NO. 53665

DATE REVISED	DATE FILMED	DATE REVISED	DATE FILMED	FED. ROAD DIST. NO.	STATE	FED. AID PROJ. NO.	SHEET NO.	TOTAL SHEETS
				6	ARK.			
				JOB NO.		061276	262	438
				(1) B7283		END BENT 4 DETAILS		53666

NOTE: Class I Protective Surface Treatment shall be applied to the roadway face and top of the end bent rail and the top of the backwall.

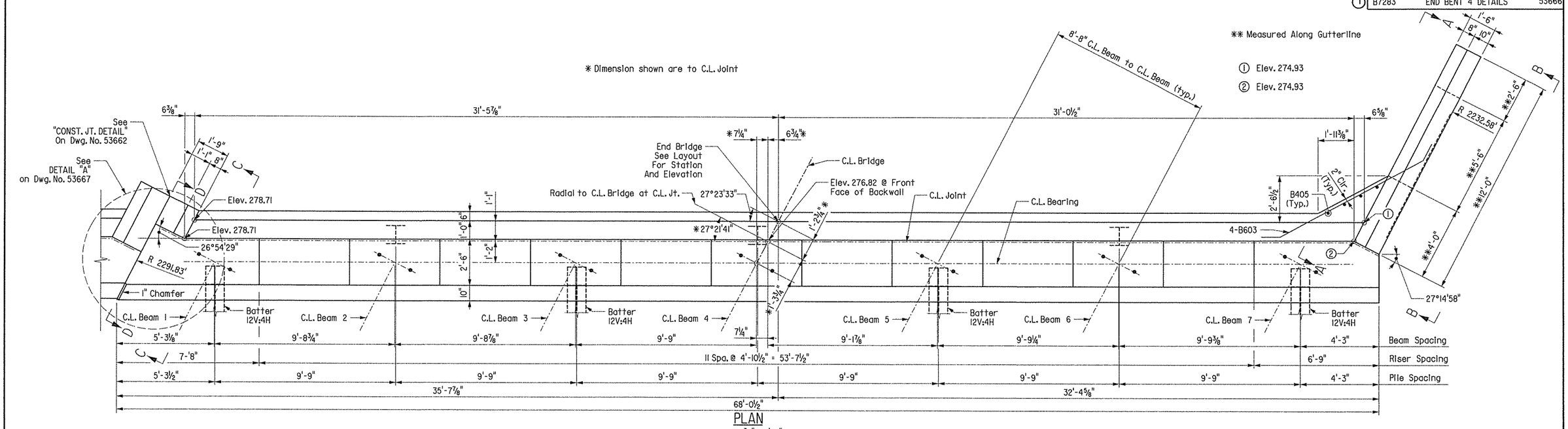

PLAN

Scale: ⅜" = 1'-0"

B404 - 118 Spaces @ 6" = 59'-0" (Back Face)
B503 - 118 Spaces @ 6" = 59'-0" (Front Face)
D601E - 62 Spaces @ 1'-0" = 62'-0" (3)

(4) Adjust as necessary to provide 2" clear to end of cap and outside face of wing.

(3) Adjust spacing of D601E bars as necessary to provide 3" clear from the longitudinal construction joint between the approach slab and gutters.

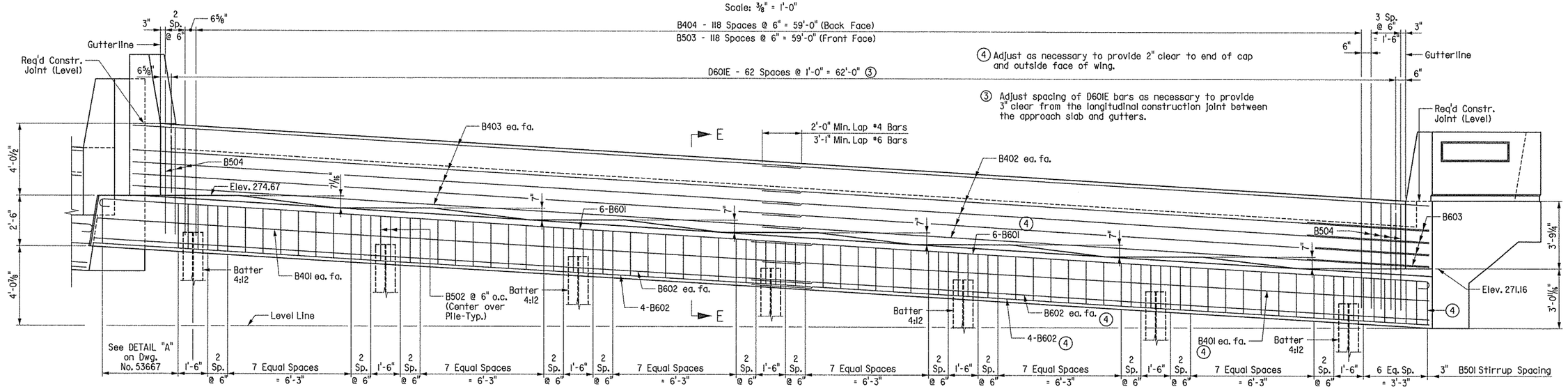

ELEVATION

Scale: ⅜" = 1'-0"
(Looking Ahead)

BEAM	"A"
1	26°59'31"
2	27°06'12"
3	27°12'56"
4	27°19'43"
5	27°26'33"
6	27°33'26"
7	27°40'22"

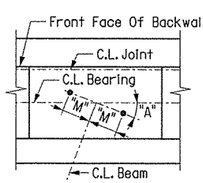

"M" = 11¼"

TYPICAL ANCHOR BOLT LAYOUT

For GENERAL NOTES FOR SUBSTRUCTURE, see Dwg. No. 53662.

For VIEW A-A, VIEW B-B, VIEW C-C, and VIEW D-D, see Dwg. No. 53667.

For SECTION E-E, see Dwg. No. 53667.

For additional information, see LAYOUT on Dwg. No. 53636.

STATE OF ARKANSAS
LARRY W. MILLER
REGISTERED PROFESSIONAL ENGINEER
No. 11339
8-19-13
BRIDGE ENGINEER

BRIDGE B
SHEET 1 OF 2
DETAILS OF BENT 4
MAIN STREET

ROUTE 67 SEC. 10

ARKANSAS STATE HIGHWAY COMMISSION

LITTLE ROCK, ARK.

DRAWN BY: LM DATE: 01-13
CHECKED BY: GS DATE: 03-01-13
DESIGNED BY: LM DATE: 01-13
FILENAME: b061276b2_b41.dgn
SCALE: As Shown

BRIDGE NO. B7283 DRAWING NO. 53666

DATE REVISED	DATE FILMED	DATE REVISED	DATE FILMED	FED. ROAD DIST. NO.	STATE	FED. AID PROJ. NO.	SHEET NO.	TOTAL SHEETS
				6	ARK.			
				JOB NO.		061276	263	438
				(1) B7283		END BENT 4 DETAILS		53667

For GENERAL NOTES FOR SUBSTRUCTURE, see Dwg. No. 53662.

For additional information, see LAYOUT on Dwg. No. 53636.

For VIEW S-S, SECTION T-T and Section U-U, see Dwg. No. 53662.

For Section W-W and DETAIL "Z", see Dwg. No. 53662.

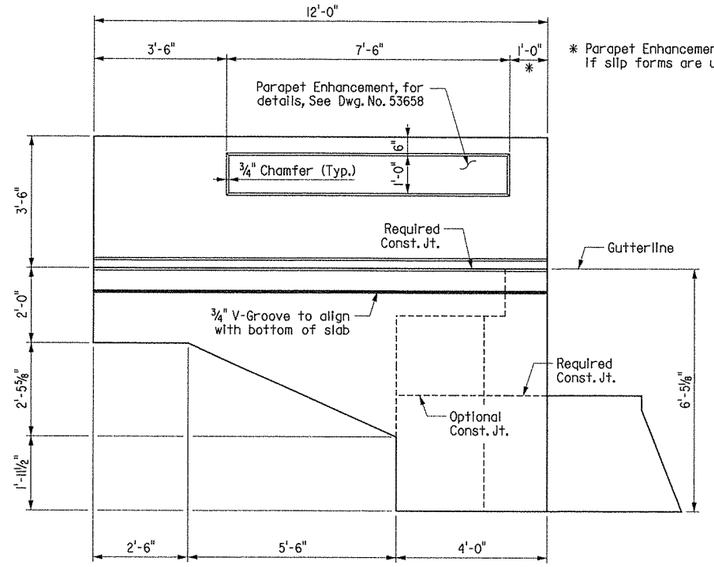

* Parapet Enhancement shall be made continuous if slip forms are used on bridge parapet rail.

VIEW A-A

Scale: 1/2" = 1'-0"

*** Bend R401 in filed as necessary to match rail line. Pin dia.=4".

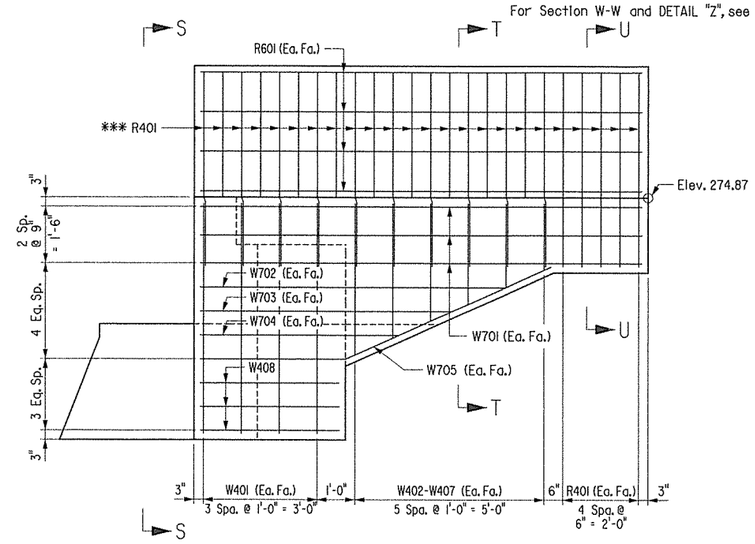

VIEW B-B

Scale: 1/2" = 1'-0"

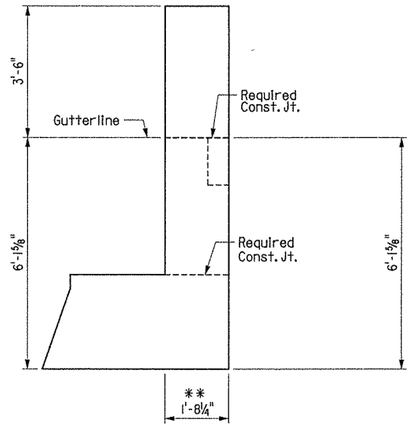

VIEW C-C

Scale: 1/2" = 1'-0"

** Measured along gutterline.

NOTE: Bars designated with an "E" suffix shall be epoxy coated.

BAR LIST - BENT 4

Mark	No. Req'd	Length	Pin Dia.
B401	4	34'-10"	Str.
B402	10	36'-2"	2"
B403	10	36'-5"	2"
B404	119	5'-4"	Str.
B405	4	4'-10"	Str.
B501	82	13'-1"	2 1/2"
B502	14	8'-1"	2 1/2"
B503	118	8'-3"	2 1/2"
B504	7	11'-2"	2 1/2"
B505	1	14'-1"	2 1/2"
B506	1	13'-8"	2 1/2"
B507	1	13'-3"	2 1/2"
B601	12	36'-8"	4 1/2"
B602	12	35'-4"	Str.
B603	4	10'-10"	4 1/2"
B604	14	2'-10"	4 1/2"
D601E	63	5'-9"	4 1/2"
R401	54	5'-3"	Str.
R602	8	11'-8"	Str.
R603	8	1'-4"	Str.
W401	8	6'-1"	Str.
W402 to W407	2 ea.	4'-0" to 1'-9"	Str.
W408	3	11'-6"	2"
W409	6	5'-10"	Str.
W410	12	1'-4"	Str.
W701	6	11'-8"	Str.
W702	2	8'-1"	Str.
W703	2	6'-8"	Str.
W704	2	5'-3"	Str.
W705	2	11'-3"	2"

BENDING DIAGRAMS (Dimensions are out to out of bars)

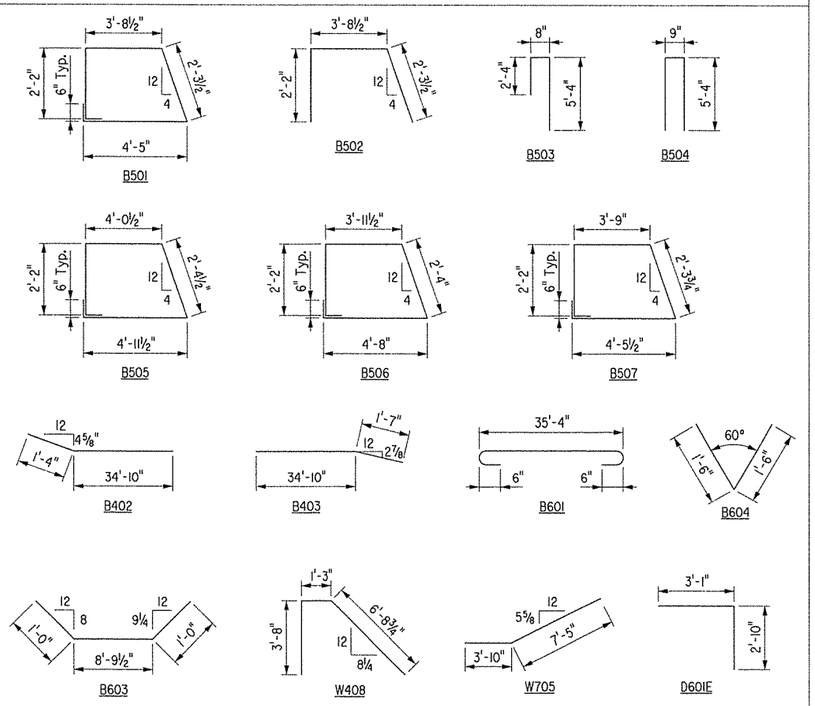

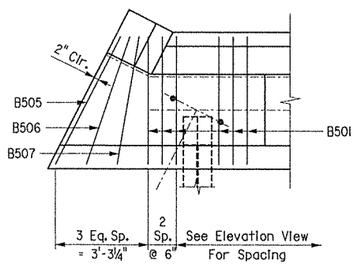

DETAIL "A"

Scale: 3/8" = 1'-0"

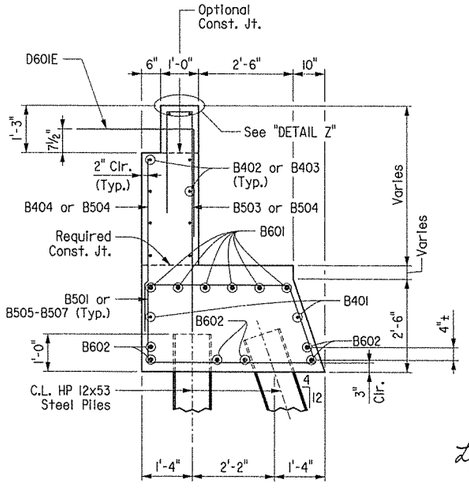

SECTION E-E

Scale: 1/2" = 1'-0"

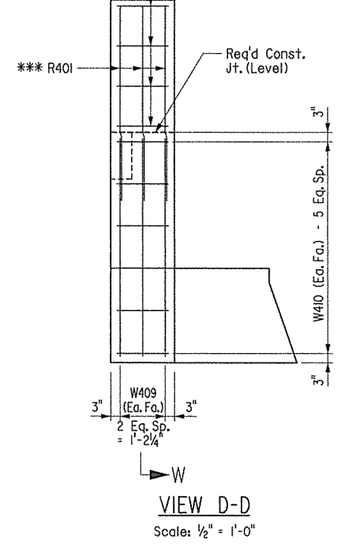

VIEW D-D

Scale: 1/2" = 1'-0"

STATE OF ARKANSAS
Larry W. Miller
REGISTERED PROFESSIONAL ENGINEER
No. 11339
8-12-13
LARRY W. MILLER

BRIDGE ENGINEER

BRIDGE B
SHEET 2 OF 2
DETAILS OF BENT 4
MAIN STREET

ROUTE 67 SEC. 10

ARKANSAS STATE HIGHWAY COMMISSION

LITTLE ROCK, ARK.

DRAWN BY: DLM DATE: 02-13

CHECKED BY: GS DATE: 03-01-13

DESIGNED BY: DLM DATE: 02-13

FILENAME: b061276b2_b42.dgn

SCALE: 3/8" = 1'-0"

BRIDGE NO. B7283

DRAWING NO. 53667

DATE REVISED	DATE FILMED	DATE REVISED	DATE FILMED	FED. ROAD DIST. NO.	STATE	FED. AID PROJ. NO.	SHEET NO.	TOTAL SHEETS
				6	ARK.			
				JOB NO.		061276	264	438
				(1) B7283		SPAN DETAILS		53668

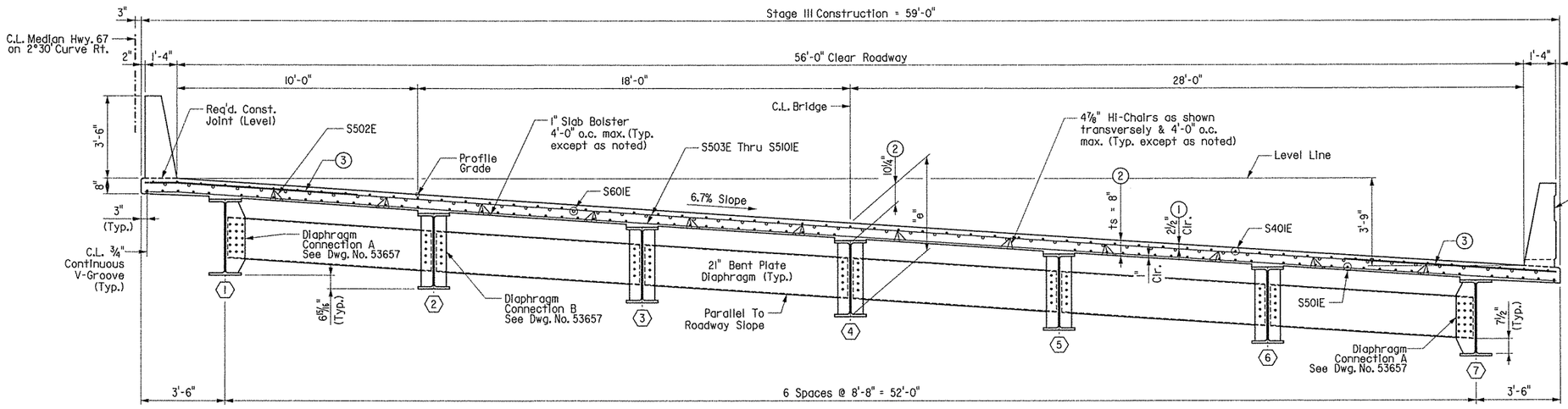

TYPICAL SECTION - STAGE III CONSTRUCTION

(Looking Ahead)
Scale: ⅜" = 1'-0"

"e" = 3'-11⅞" (W40x199)
"e" = 4'-0" (W40x215)
@ C.L. Beam & C.L. Bearing

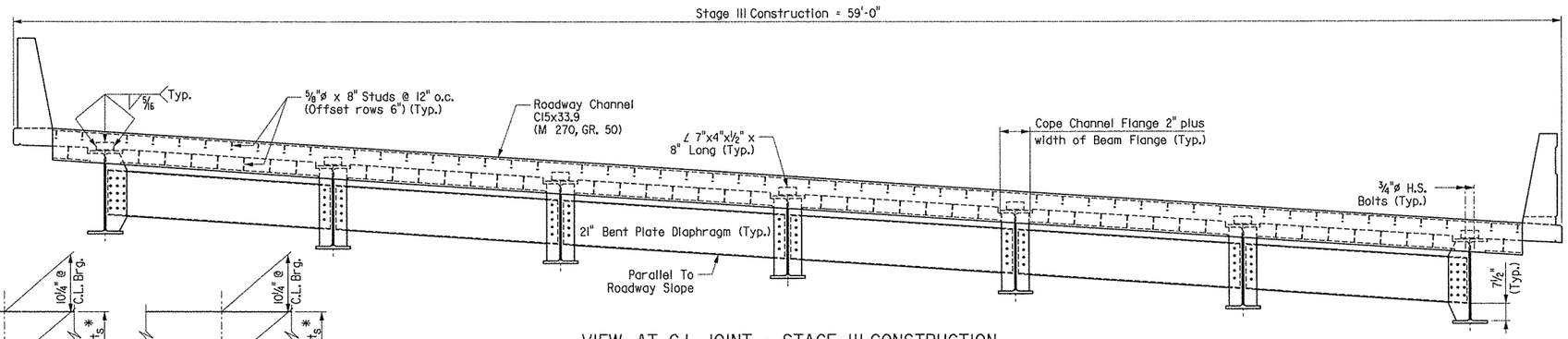

Note: ts = slab thickness as shown on "TYPICAL SECTION".
*Tolerance when removable deck forming is used is +½", -¼".
Haunch forming is required and shall be adjusted to maintain slab thickness tolerance.

Haunch dimension may vary within the following limits to maintain the grade and slab thickness tolerance; Minimum - occurs when top flange contacts bottom reinforcing; Maximum - top flange thickness plus 2⅛". No increase in concrete and structural steel quantities will be made to maintain tolerances.

Tolerances shown are applicable only when removable deck forming is used. See Std. Dwg. No. 55005 for tolerances when permanent steel deck forms are used. Payment for concrete shall be based on removable deck forming.

ADJUSTMENT FOR SLAB THICKNESS TOLERANCE WHEN REMOVABLE DECK FORMING IS USED

No Scale

VIEW AT C.L. JOINT - STAGE III CONSTRUCTION

(Looking Ahead)
Scale: ⅜" = 1'-0"

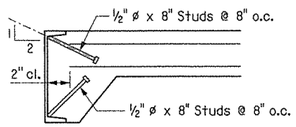

Note: As an alternate to ⅝" ø studs, ½" ø x 8" studs spaced as shown may be used. Use weight of ⅝" ø stud as basis of measurement of structural steel in anchors.

DETAIL OF ALTERNATE ANCHORS

No Scale

EXPANSION DEVICE:

Roadway Channel C15x33.9 (M 270, Gr. 50)
Connection ∠'s 7"x4"x½" x 8" Long
Detail Device ⅛" high & provide ¼" shims using 1 - ⅛" PL & 2 - 1/16" PL's

For additional details of Poured Silicone Joint, see Dwg. No. 53672.

(1) TOLERANCE:
Minus: ¼"
Plus: Equal to amount of slab thickening used to meet slab thickness tolerance. See "ADJUSTMENT FOR SLAB THICKNESS TOLERANCE WHEN REMOVABLE DECK FORMING IS USED".

(2) See "ADJUSTMENT FOR SLAB THICKNESS TOLERANCE WHEN REMOVABLE DECK FORMING IS USED".

NOTES:

One Epoxy Coated #5 bar in the top and one Epoxy Coated #5 bar in the bottom may be substituted for each bar S502E. Payment will be based on the weight of bars S502E.

Class I Protective Surface Treatment shall be applied to the roadway surface and the top and roadway face of railing.

All bars designated with an "E" suffix are to be epoxy coated.

SLAB REINFORCING:

Transverse:
S502E @ 12" Centers (Bent up over beams)
S503E @ 12" Centers (Top & Bottom)
S504E-S510IE @ 6" Centers (Top & Bottom)
(3) S701E (Place as shown)
See DETAIL A on Dwg. No. 53669
Longitudinal:
S401E @ 12" Centers (Top)
S501E as shown (Bottom)
S601E @ 12" Centers (Top over Int. Bents)

For additional reinforcing details, see Dwg. No. 53669 & 53671.

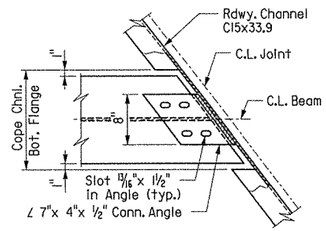

ROADWAY CHANNEL CONNECTION DETAIL

STATE OF ARKANSAS
REGISTERED PROFESSIONAL ENGINEER
No. 11339
LARRY W. MILLER
3-24-14
BRIDGE ENGINEER

BRIDGE B
SHEET 1 OF 4
DETAILS OF 238'-0" CONTINUOUS COMPOSITE W-BEAM UNIT MAIN STREET

ROUTE 67 SEC. 10

ARKANSAS STATE HIGHWAY COMMISSION

LITTLE ROCK, ARK.

DRAWN BY: DLM DATE: 01-13
CHECKED BY: GS DATE: 03-01-13
DESIGNED BY: DLM DATE: 01-13
FILENAME: b061276b2_sl.dgn
SCALE: As Shown

BRIDGE NO. B7283 DRAWING NO. 53668

DATE REVISED	DATE FILMED	DATE REVISED	DATE FILMED

FED. ROAD DIST. NO.	STATE	FED. AID PROJ. NO.	SHEET NO.	TOTAL SHEETS
6	ARK.			
JOB NO.		061276	265	438
(I) B7283		SPAN DETAILS		53669

(F) C.L. Full Depth Parapet Joint (1/4" to 1" max.). Stop 4" from top of slab.

(P) C.L. Partial Depth Parapet Joint (1/4" to 1" max.). Stop 1'-6" from top of slab.

(A) 41 Spa. @ 6" = 20'-6"
S504E-S545E (Top & Bottom)

(B) 55 Spa. @ 6" = 27'-6"
S546E-S5101E (Top & bottom)

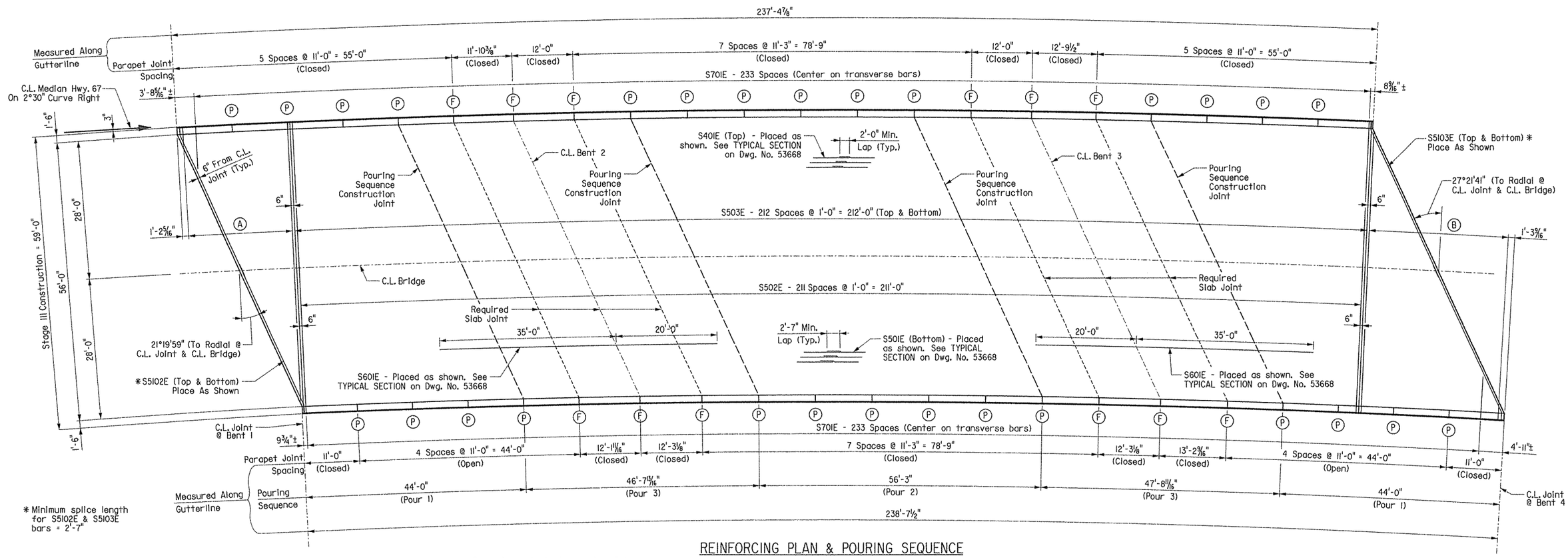

REINFORCING PLAN & POURING SEQUENCE

Scale: 1" = 10'-0"

1/2 " x 1" Type 3 or 4 Joint Sealer. See Subsection 501.02 (h) and 501.05 (j). Backer rod filler will not be required. Joint Sealer shall be measured and paid for as Class S(AE) Concrete-Bridge. Slab joints shall extend to the outside edge of the deck slab. Slab joints shall be installed before the parapet railing is poured. If slab joints are to be sawed, they shall be sawed as soon as the concrete has sufficiently set up to allow the sawing of joint without damage to the slab. Slab joints shall be placed at all Pouring Sequence Construction Joints and Required Slab Joint locations. The joint sealer shall extend across the deck slab (gutterline to gutterline). Slab joints shall align with parapet open joints.

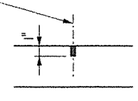

SLAB JOINT DETAIL

No Scale

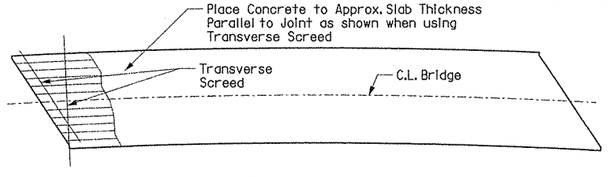

Note: At the Contractor's option, the Transverse Screed may be placed parallel to the skew or perpendicular to C.L. Bridge

CONCRETE PLACEMENT PROCEDURE

No Scale

Note: Pours with the same number may be placed simultaneously or separately. All Pours (1) must be placed before Pours (2) can be placed, and all Pours (2) before Pours (3). 48 hours shall elapse before the end of a pour and the start of an adjacent pour. 72 hours shall elapse between the end of a pour and the start of an adjacent pour.

72 hours shall elapse between the completion of the entire deck and the pouring of the parapet. Any railing pours made before the entire slab unit has been placed must be approved by the Engineer.

The Contractor must obtain approval from the Engineer for any deviations from the pouring sequence shown.

Concrete in bridge superstructure shall be consolidated for the entire pour before any concrete has taken its initial set. This may require the use of a retarding agent.

Note: Required slab joints and pouring sequence construction joints shall align with parapet open joint at the gutterline.

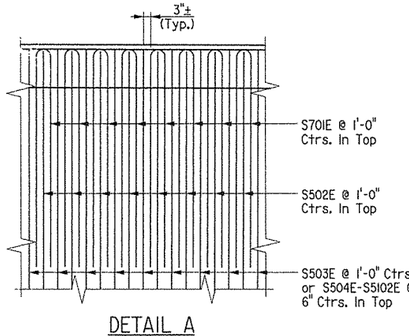

DETAIL A

Scale: 3/8" = 1'-0"

Note: See TYPICAL SECTION on Dwg. No. 53668 for placement of longitudinal reinforcing.

Note: For Bar List, see Dwg. No. 53671.

Note: For parapet details, see Dwg. No. 53658 & 53659.

Note: All transverse reinforcing steel shall be placed on radial lines. Spacing is measured along C.L. Bridge, unless noted otherwise.

All longitudinal lines and longitudinal reinforcing steel shall be placed on curves concentric with C.L. Median.

STATE OF ARKANSAS
REGISTERED PROFESSIONAL ENGINEER
No. 11339
3-24-14
LARRY W. MILLER
BRIDGE ENGINEER

BRIDGE B
SHEET 2 OF 4
DETAILS OF 238'-0" CONTINUOUS COMPOSITE W-BEAM UNIT
MAIN STREET

ROUTE 67 SEC. 10

ARKANSAS STATE HIGHWAY COMMISSION

LITTLE ROCK, ARK.

DRAWN BY: DLM DATE: 01-13 FILENAME: b061276b2_s2.dgn
CHECKED BY: GS DATE: 03-01-13 SCALE: As Shown
DESIGNED BY: DLM DATE: 01-13

BRIDGE NO. B7283 DRAWING NO. 53669

DATE REVISED	DATE FILMED	DATE REVISED	DATE FILMED	FED. ROAD DIST. NO.	STATE	FED. AID PROJ. NO.	SHEET NO.	TOTAL SHEETS
				6	ARK.			
				JOB NO.		061276	266	438
				(1) B7283		SPAN DETAILS		53670

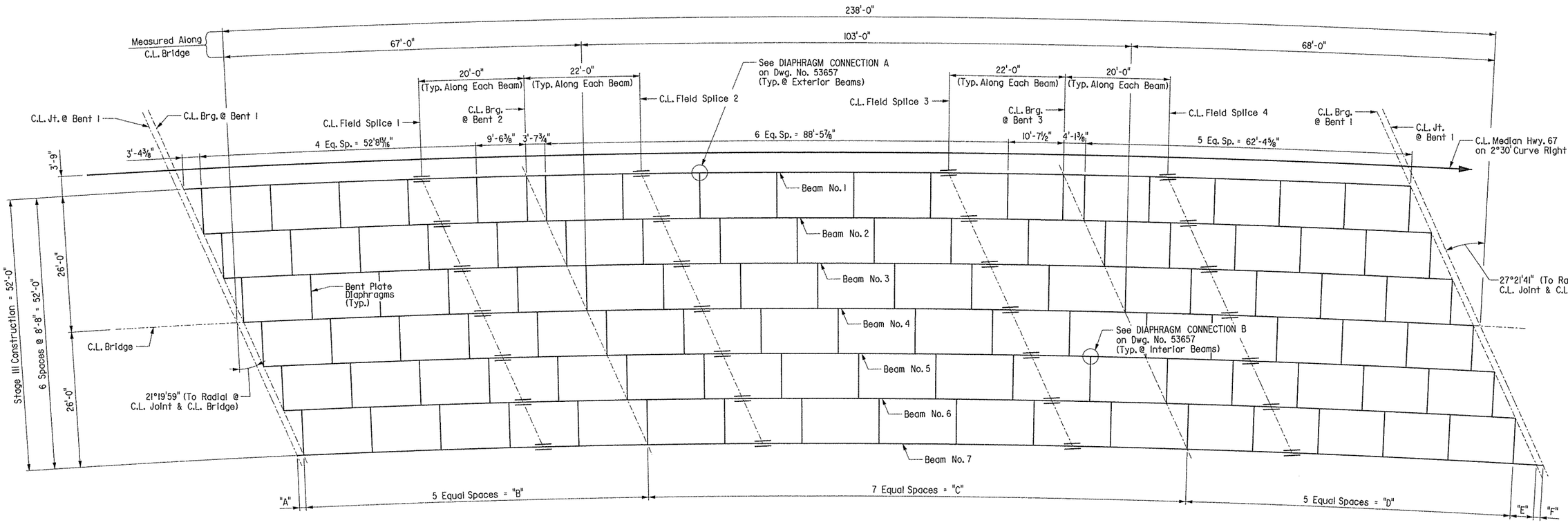

FRAMING PLAN

Scale: 1" = 10'-0"

TABLE OF VARIABLES

Beam No.	1	2	3	4	5	6	7
"A"	1'-3"	1'-3"	1'-3"	1'-3"	1'-3"	1'-3"	1'-3"
"B"	See "Framing Plan"	65'-8 3/16"	65'-8⅝"	65'-9⅛"	65'-9⅝"	65'-10 3/16"	65'-10 11/16"
"C"		102'-10 1/16"	102'-11 1/16"	103'-0"	103'-0 5/16"	103'-1 5/16"	103'-2⅞"
"D"		62'-1¾"	62'-2 3/16"	62'-2¾"	62'-3¼"	62'-3 11/16"	62'-4⅛"
"E"		---	4'-5"	4'-5¼"	4'-5½"	4'-5¾"	4'-6 1/16"	4'-6 5/16"
"F"		1'-3¾"	1'-3¾"	1'-3¾"	1'-3¾"	1'-3¾"	1'-3 11/16"	1'-3 11/16"
"G"		1'-1 5/16"	1'-1 5/16"	1'-1 5/16"	1'-1 5/16"	1'-1 5/16"	1'-2"	1'-2"
"H"		1'-2⅝"	1'-2⅝"	1'-2⅝"	1'-2⅝"	1'-2⅝"	1'-2 1/16"	1'-2 1/16"
"J"		3/16"	3/16"	3/16"	3/16"	3/16"	3/16"	3/16"
"K"		4"	4 1/16"	4 1/16"	4 1/16"	4⅛"	4⅛"	4⅛"

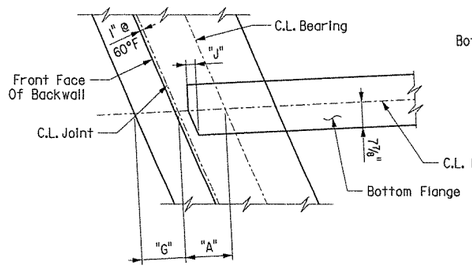

BEARING PLAN @ END BENT 1

Scale: ½" = 1'-0"

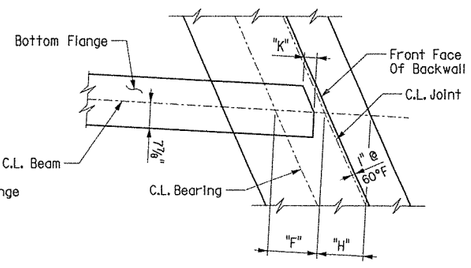

BEARING PLAN @ END BENT 4

Scale: ½" = 1'-0"

NOTES:

All longitudinal dimensions are taken along C.L. Beam, U.N.O.

Beams are curved and concentric to C.L. Bridge. All diaphragms are on radial lines, U.N.O.

For FIELD SPLICE DETAILS, see Dwg. No. 53656.

For BENT PLATE DIAPHRAGM DETAILS, see Dwg. No. 53657.

STATE OF ARKANSAS
Larry W. Miller
REGISTERED PROFESSIONAL ENGINEER
No. 11339
8-19-13
LARRY W. MILLER
BRIDGE ENGINEER

BRIDGE B
SHEET 3 OF 4
DETAILS OF 238'-0" CONTINUOUS COMPOSITE W-BEAM UNIT
MAIN STREET

ROUTE 67 SEC. 10

ARKANSAS STATE HIGHWAY COMMISSION

LITTLE ROCK, ARK.

DRAWN BY: DLM DATE: 01-13
CHECKED BY: GS DATE: 03-01-13
DESIGNED BY: DLM DATE: 01-13
FILENAME: b061276b2_s3.dgn
SCALE: As Shown

BRIDGE NO. B7283 DRAWING NO. 53670

DATE REVISED	DATE FILMED	DATE REVISED	DATE FILMED

FED. ROAD DIST. NO.	STATE	FED. AID PROJ. NO.	SHEET NO.	TOTAL SHEETS
6	ARK.			
JOB NO.		061276	267	438
(1) B7283		SPAN DETAILS		53671

TABLE OF DEAD LOAD DEFLECTIONS (INCHES)

Camber for Dead Load Deflection plus vertical curve +/- ¼" tolerance. Vertical curve corrections not included. Negative sign (-) indicates upward deflection. Deflections shown are along the centerline beam from the plane perpendicular to the web extending from centerline bearing to centerline bearing.

	POINT OF DEFLECTION	Structural Steel							Structural Steel (+) Slab							Structural Steel (+) Slab (+) Parapet Rail						
		Beam 1	Beam 2	Beam 3	Beam 4	Beam 5	Beam 6	Beam 7	Beam 1	Beam 2	Beam 3	Beam 4	Beam 5	Beam 6	Beam 7	Beam 1	Beam 2	Beam 3	Beam 4	Beam 5	Beam 6	Beam 7
SPAN NO. 1	1.00	0.000	0.000	0.000	0.000	0.000	0.000	0.000	0.000	0.000	0.000	0.000	0.000	0.000	0.000	0.000	0.000	0.000	0.000	0.000	0.000	0.000
	1.10	0.017	0.017	0.018	0.018	0.018	0.017	0.015	0.087	0.093	0.095	0.095	0.095	0.092	0.081	0.092	0.098	0.100	0.100	0.100	0.097	0.086
	1.20	0.027	0.031	0.032	0.032	0.032	0.031	0.027	0.143	0.168	0.171	0.172	0.171	0.167	0.144	0.152	0.177	0.180	0.181	0.180	0.176	0.153
	1.30	0.032	0.038	0.039	0.039	0.039	0.038	0.034	0.168	0.203	0.208	0.208	0.208	0.203	0.178	0.178	0.214	0.219	0.219	0.219	0.214	0.189
	1.40	0.032	0.037	0.037	0.037	0.037	0.036	0.032	0.164	0.195	0.199	0.199	0.199	0.194	0.169	0.174	0.206	0.210	0.210	0.210	0.204	0.179
	1.50	0.024	0.028	0.029	0.029	0.029	0.028	0.025	0.122	0.146	0.151	0.151	0.151	0.147	0.129	0.130	0.154	0.159	0.159	0.159	0.155	0.137
	1.60	0.010	0.013	0.014	0.014	0.014	0.014	0.012	0.047	0.065	0.069	0.070	0.070	0.068	0.059	0.050	0.069	0.073	0.074	0.074	0.071	0.063
	1.70	-0.003	-0.002	-0.002	-0.002	-0.001	-0.002	-0.003	-0.019	-0.019	-0.017	-0.016	-0.014	-0.016	-0.019	-0.020	-0.020	-0.018	-0.017	-0.015	-0.017	-0.020
	1.80	-0.016	-0.015	-0.015	-0.015	-0.014	-0.014	-0.013	-0.087	-0.087	-0.086	-0.086	-0.083	-0.083	-0.072	-0.092	-0.092	-0.091	-0.091	-0.088	-0.088	-0.076
	1.90	-0.013	-0.016	-0.016	-0.016	-0.016	-0.016	-0.015	-0.071	-0.091	-0.091	-0.091	-0.090	-0.090	-0.083	-0.075	-0.096	-0.096	-0.096	-0.095	-0.095	-0.088
SPAN NO. 2	2.00	0.000	0.000	0.000	0.000	0.000	0.000	0.000	0.000	0.000	0.000	0.000	0.000	0.000	0.000	0.000	0.000	0.000	0.000	0.000	0.000	0.000
	2.10	0.068	0.072	0.071	0.071	0.071	0.070	0.067	0.359	0.397	0.396	0.396	0.393	0.385	0.363	0.381	0.419	0.418	0.418	0.415	0.407	0.385
	2.20	0.163	0.176	0.175	0.175	0.173	0.171	0.167	0.865	0.970	0.971	0.969	0.961	0.943	0.901	0.919	1.024	1.025	1.022	1.014	0.997	0.955
	2.30	0.260	0.275	0.274	0.273	0.271	0.267	0.262	1.379	1.516	1.519	1.515	1.504	1.476	1.413	1.464	1.600	1.603	1.598	1.587	1.560	1.498
	2.40	0.324	0.345	0.344	0.342	0.340	0.335	0.330	1.716	1.899	1.905	1.899	1.885	1.851	1.785	1.822	2.004	2.010	2.003	1.989	1.956	1.892
	2.50	0.348	0.370	0.369	0.368	0.365	0.360	0.359	1.842	2.039	2.046	2.040	2.025	1.989	1.939	1.956	2.152	2.158	2.152	2.136	2.101	2.056
	2.60	0.325	0.345	0.344	0.343	0.340	0.335	0.336	1.718	1.899	1.907	1.901	1.887	1.853	1.816	1.824	2.004	2.012	2.005	1.991	1.958	1.925
	2.70	0.258	0.275	0.275	0.274	0.271	0.267	0.272	1.363	1.513	1.522	1.516	1.505	1.477	1.467	1.447	1.597	1.606	1.599	1.588	1.561	1.555
	2.80	0.168	0.177	0.177	0.176	0.174	0.172	0.177	0.886	0.971	0.977	0.973	0.966	0.948	0.955	0.941	1.025	1.031	1.026	1.019	1.002	1.013
	2.90	0.072	0.073	0.073	0.073	0.072	0.071	0.073	0.379	0.401	0.404	0.403	0.400	0.392	0.396	0.402	0.423	0.426	0.425	0.422	0.414	0.420
	3.00	0.000	0.000	0.000	0.000	0.000	0.000	0.000	0.000	0.000	0.000	0.000	0.000	0.000	0.000	0.000	0.000	0.000	0.000	0.000	0.000	0.000
SPAN NO. 3	3.10	-0.016	-0.017	-0.017	-0.017	-0.016	-0.016	-0.019	-0.082	-0.092	-0.094	-0.094	-0.092	-0.091	-0.104	-0.087	-0.097	-0.099	-0.099	-0.097	-0.096	-0.110
	3.20	-0.012	-0.013	-0.013	-0.013	-0.012	-0.012	-0.019	-0.062	-0.073	-0.076	-0.076	-0.074	-0.073	-0.109	-0.066	-0.077	-0.080	-0.080	-0.078	-0.078	-0.115
	3.30	-0.001	0.000	0.000	0.000	0.001	0.001	-0.008	-0.004	0.000	-0.004	-0.004	-0.002	-0.002	-0.049	-0.004	0.000	-0.004	-0.004	-0.002	-0.003	-0.052
	3.40	0.018	0.018	0.018	0.018	0.019	0.018	0.007	0.096	0.098	0.094	0.094	0.094	0.092	0.032	0.102	0.103	0.099	0.099	0.099	0.096	0.034
	3.50	0.031	0.033	0.033	0.033	0.034	0.033	0.022	0.166	0.182	0.178	0.178	0.177	0.174	0.113	0.176	0.192	0.188	0.188	0.187	0.183	0.120
	3.60	0.041	0.043	0.043	0.043	0.043	0.042	0.032	0.217	0.235	0.232	0.231	0.229	0.225	0.167	0.231	0.248	0.245	0.244	0.241	0.237	0.177
	3.70	0.041	0.044	0.044	0.044	0.044	0.043	0.035	0.218	0.240	0.238	0.237	0.235	0.231	0.182	0.232	0.253	0.251	0.250	0.248	0.243	0.193
	3.80	0.034	0.036	0.036	0.036	0.036	0.035	0.029	0.181	0.196	0.195	0.194	0.193	0.189	0.152	0.192	0.207	0.206	0.205	0.203	0.199	0.161
	3.90	0.019	0.020	0.020	0.020	0.020	0.020	0.017	0.102	0.111	0.111	0.110	0.109	0.108	0.092	0.108	0.117	0.117	0.116	0.115	0.114	0.098
	4.00	0.000	0.000	0.000	0.000	0.000	0.000	0.000	0.000	0.000	0.000	0.000	0.000	0.000	0.000	0.000	0.000	0.000	0.000	0.000	0.000	0.000

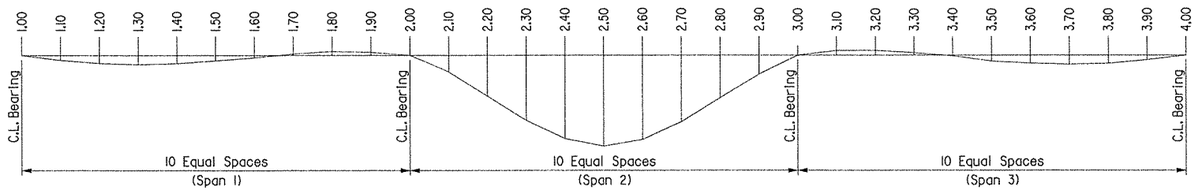

DEAD LOAD DEFLECTION DIAGRAM

Not to Scale

SUPERSTRUCTURE BAR LIST

Mark	No. Req'd.	Length	A	Pin Dia.	Mark	No. Req'd.	Length	Pin Dia.
S401E	413	35'-10"	---	Str.	P401E	882	6'-8"	2"
					P402E	80	8'-0"	2"
S501E	410	49'-10"	---	Str.				
S502E	212	59'-9"	---	3"	P501E	882	5'-7"	3¾"
S503E	426	58'-8"	---	Str.	P502E	100	10'-8"	Str.
S504E to	2 ea.	3'-9" to	---	Str.	P503E	70	10'-11"	Str.
S545E		56'-2"			P504E	11	11'-6"	Str.
S546E to	2 ea.	3'-3" to	---	Str.	P505E	22	11'-8"	Str.
S5101E		56'-5"			P506E	11	12'-5"	Str.
S5102E	4	32'-9"	31'-3"	3¼"	P507E	11	11'-10"	Str.
S5103E	4	34'-3"	32'-9"	3¼"	P508E	22	11'-11"	Str.
					P509E	11	12'-11"	Str.
S601E	116	55'-0"	---	Str.	P510E	12	54'-8"	Str.
					P511E	12	41'-2"	Str.
S701E	468	12'-8"	---	5¼"				

Bending Diagrams
(Dimensions are out to out of bars.)

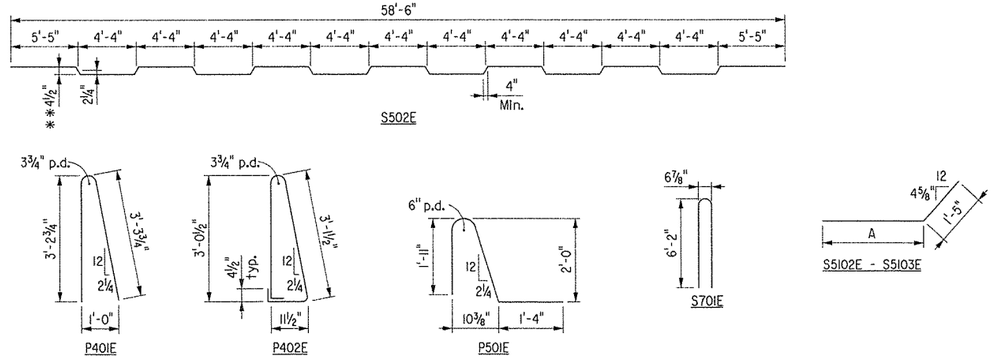

** ½" Overtolerance, No Undertolerance

Note: All bars designated with an "E" suffix are to be epoxy coated.

STATE OF ARKANSAS
REGISTERED PROFESSIONAL ENGINEER
No. 11339
LARRY W. MILLER
8-19-13
BRIDGE ENGINEER

BRIDGE B
SHEET 4 OF 4
DETAILS OF 238'-0" CONTINUOUS COMPOSITE W-BEAM UNIT
MAIN STREET

ROUTE 67 SEC. 10

ARKANSAS STATE HIGHWAY COMMISSION

LITTLE ROCK, ARK.

DRAWN BY: DLM DATE: 01-13
CHECKED BY: GS DATE: 03-01-13
DESIGNED BY: DLM DATE: 01-13

FILENAME: b061276b2_s4.dgn
SCALE: As Shown

BRIDGE NO. B7283 DRAWING NO. 53671

DATE REVISED	DATE FILMED	DATE REVISED	DATE FILMED	FED. ROAD DIST. NO.	STATE	FED. AID PROJ. NO.	SHEET NO.	TOTAL SHEETS
				6	ARK.			
				JOB NO.		061276	268	438
				(1) A&B7283		JOINT DETAILS		53672

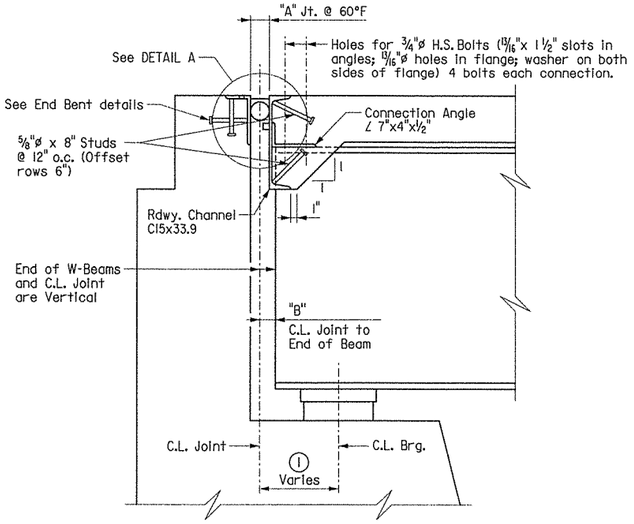

(1) Measured Along C.L. Beam. See TABLE OF BEAM VARIABLES on Dwg. Nos. 53656

SECTION THRU JOINT AT END BENTS

Scale: 1" = 1'-0"

Note: Sections thru Joints are taken normal to C.L. Joints

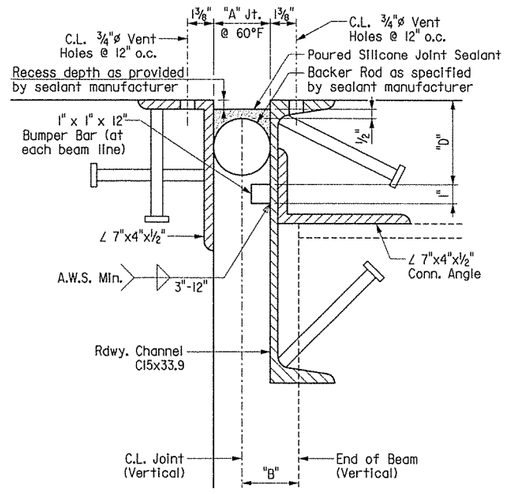

NOTE: Concrete shall be hand packed under the joint armor. Care shall be taken to ensure that concrete completely fills the areas below the top channel flange.

DETAIL A

Scale: 3" = 1'-0"

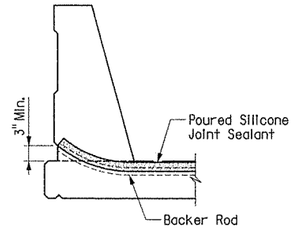

JOINT SEAL PLACEMENT AT CURB

Scale: ¾" = 1'-0"

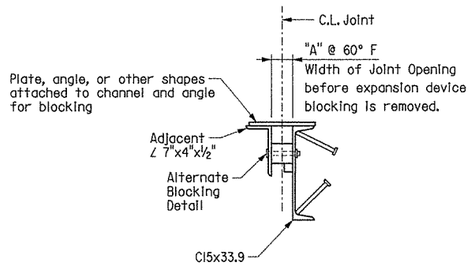

DETAILS FOR BLOCKING EXPANSION JOINT DEVICE

NOTE:
Each expansion joint device shall be blocked in the Shop by the Fabricator to the dimension shown, and the blocking details shall be shown on the Shop Drawings. Blocking shall be placed within 2 feet of each end of the device and with a maximum spacing of 8 feet.

EXPANSION DEVICE INSTALLATION AT END BENTS:

The contractor may elect to install the expansion device using one of the following two alternatives:

1) The concrete span pour adjacent to joint shall be placed before the end bent backwall is placed. After the end bent backwall forms are in place and the beams erected, the blocked expansion device shall be installed and adjusted for grade. All connection bolts shall be fully tightened prior to placing the deck concrete adjacent to the bent. Immediately prior to pouring the backwall concrete, the blocking shall be removed, the opening adjusted for temperature, and the backwall constructed.

2) The backwall shall be poured to the optional construction joint after beams are erected. The blocked expansion device shall be installed and adjusted for grade. All connection bolts shall be fully tightened prior to placing the deck concrete adjacent to the bent. Immediately prior to pouring the remainder of the backwall concrete, the blocking shall be removed and the opening adjusted for temperature. Backfill shall not be placed behind the backwall until the deck concrete on the adjacent span has been placed.

SILICONE JOINT DATA

Bent Number	"A" Width Perpendicular to Joint at 24 Hour Average Temperature ** of:			"B" Perpendicular to Joint at 60°F	Bumper Plate Size	"D"
	40° F	60° F	80° F			
1 & 4	2 3/16"	2"	1 13/16"	2 1/4"	1" x 1"	4½"

** The temperature used to set the joint opening shall be the approximate average air temperature during the 24 hour period immediately before the bolts are tightened. The Engineer shall establish the temperature. Interpolation of the table may be necessary.

NOTES:
The temperature limitations recommended by the sealant manufacturer shall be observed.

The sealant shall be installed only when the average 24 hour air temperature is between 40°F and 80°F.

BACKER ROD NOTE:
Use an appropriately sized backer rod at the depth shown in the manufacturer's literature based on the joint width at the time of sealing.

Except as noted, do not install more backer rod than can be sealed in the same day.

The contractor shall verify separation of the backer rod from the joint material after the joint material has set.

STATE OF ARKANSAS
Larry W. Miller
REGISTERED PROFESSIONAL ENGINEER
No. 11339
8-19-13
LARRY W. MILLER
BRIDGE ENGINEER

DETAILS OF ARMORED JOINT WITH POURED SILICONE JOINT MAIN STREET

ROUTE 67 SEC. 10

ARKANSAS STATE HIGHWAY COMMISSION

LITTLE ROCK, ARK.

DRAWN BY: DLM DATE: 01-13 FILENAME: b061276m2_jl.dgn
CHECKED BY: GS DATE: 03-01-13 SCALE: As Shown
DESIGNED BY: DLM DATE: 01-13

BRIDGE NO. A&B7283 DRAWING NO. 53672

(1) Care shall be taken to ensure that the external load plate is in full and complete contact with the beam or girder flange before welding begins.

(2) C.L. Bearing shall align with C.L. Beam

Note: The direction of bevel of the external load plate may not be accurately depicted with respect to the Ta and Tb values shown in the Table of Fabricator Variables.

For General Notes, See Dwg. No. 53674

DATE REVISED	DATE FILMED	DATE REVISED	DATE FILMED	FED. ROAD DIST. NO.	STATE	FED. AID PROJ. NO.	SHEET NO.	TOTAL SHEETS
				6	ARK.			
				JOB NO.		061276	269	438
				(1) A&B7283		ELASTOMERIC BEARINGS		53673

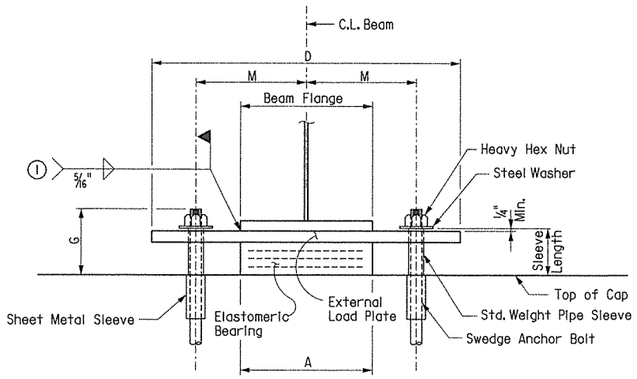

FRONT VIEW @ BENT NOS. 1 & 4

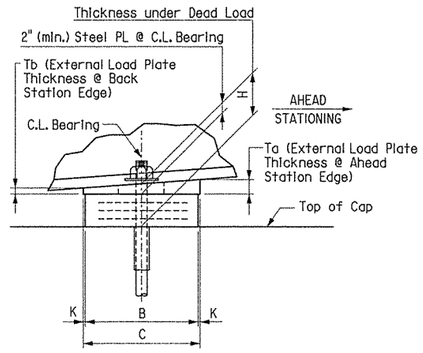

SIDE VIEW @ BENT NOS. 1 & 4

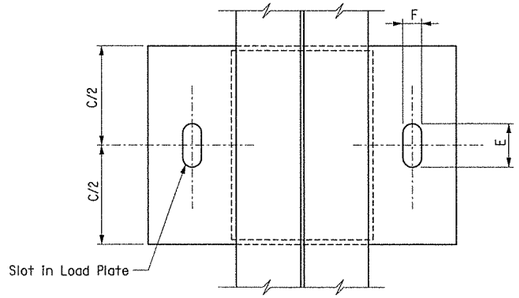

PLAN VIEW @ BENT NOS. 1 & 4

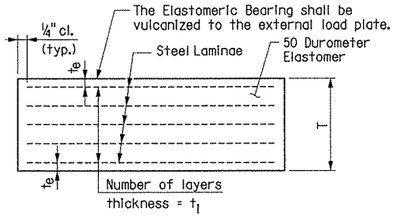

t_e = thickness of elastomer cover on top and bottom of pad

t_l = thickness of elastomer between steel laminae

N = number of elastomer layers of thickness t_l

ELASTOMERIC BEARING

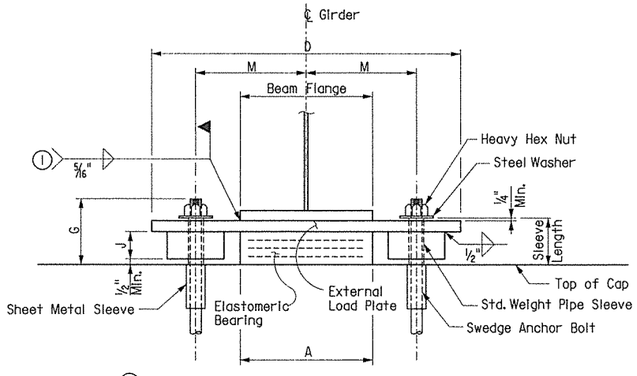

(1) Care shall be taken to ensure that the external load plate is in full and complete contact with the beam or girder flange before welding begins.

FRONT VIEW

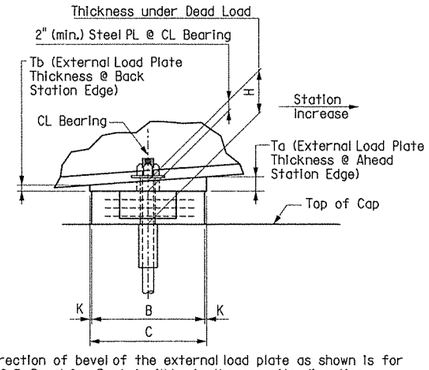

The direction of bevel of the external load plate as shown is for Bents 2-3. Bevel for Bent 4 will be in the opposite direction. See Table of Fabricator Variables for dimensions.

SIDE VIEW

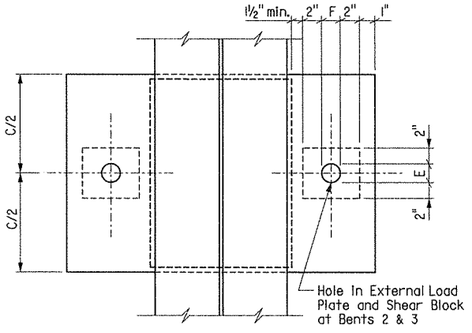

PLAN VIEW

BENTS 2 & 3

TABLE OF LOAD PLATE THICKNESS

BRIDGE	BENT NO.	BEAM NO.	T_a	T_b
A	1	1-4	2.07	1.93
A	1	5-8	2.06	1.94
A	2	1	2.07	1.93
A	2	2-6	2.06	1.94
A	2	7-8	2.05	1.95
A	3	1-4	2.01	1.99
A	3	5-8	2.00	2.00
B	1	1-4	2.06	1.94
B	1	5-7	2.05	1.95
B	2	1-4	2.05	1.95
B	2	5-7	2.04	1.96
B	3	1	2.00	2.00
B	3	2-7	1.99	2.01

TABLE OF FABRICATOR VARIABLES

* Maximum Design Load = Service I Limit State

** See TABLE OF LOAD PLATE THICKNESS

BRIDGE NO.	LOCATION: BENT NO(S).	LOCATION: LINE ID	LOCATION: BEAM OR GIRDER NO.	BEARING TYPE	NO. of BEARINGS EACH BENT	*MAXIMUM DESIGN LOAD (KIPS)	G	H	ELASTOMERIC PAD: A	B	N	t_l	t_e	NO. & THICKNESS OF STEEL LAMINAE	T	EXTERNAL LOAD PLATE: C	D	E	F	J	K	M	T_a	T_b	ANCHOR BOLT: ANCHOR BOLT (ø x L)	GRADE	PIPE SLEEVE SIZE (ø x L)	SHEET METAL SLEEVE SIZE (ø x L)	STEEL WASHER SIZE (O.D.)
A7283	1	--	All	Exp.	8	102.68	8¼"	5"	17½"	10½"	4	1/2"	1/4"	5 @ 12 Ga.	3"	11½"	28½"	3¾"	2⅝"		½"	11¼"	**	**	1¾" x 29¾"	55	2" x 5⅜"	4" x 13½"	3⅜"
	2	--	All	Fixed	8	265.49	9½"	6¾"	22"	14½"	7	1/2"	1/4"	8 @ 12 Ga.	4⁹⁄₁₆"	15½"	39"	2"	2"	4¼"	½"	15½"	**	**	1¼" x 25"	55	1¼" x 7⅛"	3" x 13½"	2½"
	3	--	All	Fixed	8	265.49	9½"	6¾"	22"	14½"	7	1/2"	1/4"	8 @ 12 Ga.	4⁹⁄₁₆"	15½"	39"	2"	2"	4¼"	½"	15½"	**	**	1¼" x 25"	55	1¼" x 7⅛"	3" x 13½"	2½"
	4	--	All	Exp.	8	102.68	8¼"	5"	17½"	10½"	4	1/2"	1/4"	5 @ 12 Ga.	3"	11½"	28½"	3¾"	2⅝"		½"	11¼"	1.99	2.01	1¾" x 29¾"	55	2" x 5⅜"	4" x 13½"	3⅜"
B7283	1	--	All	Exp.	7	102.68	8¼"	5"	17½"	10½"	4	1/2"	1/4"	5 @ 12 Ga.	3"	11½"	28½"	3¾"	2⅝"		½"	11¼"	**	**	1¾" x 29¾"	55	2" x 5⅜"	4" x 13½"	3⅜"
	2	--	All	Fixed	7	265.49	9½"	6¾"	22"	14½"	7	1/2"	1/4"	8 @ 12 Ga.	4⁹⁄₁₆"	15½"	39"	2"	2"	4¼"	½"	15½"	**	**	1¼" x 25"	55	1¼" x 7⅛"	3" x 13½"	2½"
	3	--	All	Fixed	7	265.49	9½"	6¾"	22"	14½"	7	1/2"	1/4"	8 @ 12 Ga.	4⁹⁄₁₆"	15½"	39"	2"	2"	4¼"	½"	15½"	**	**	1¼" x 25"	55	1¼" x 7⅛"	3" x 13½"	2½"
	4	--	All	Exp.	7	102.68	8¼"	5"	17½"	10½"	4	1/2"	1/4"	5 @ 12 Ga.	3"	11½"	28½"	3¾"	2⅝"		½"	11¼"	1.99	2.01	1¾" x 29¾"	55	2" x 5⅜"	4" x 13½"	3⅜"

STATE OF ARKANSAS
Larry W. Miller
REGISTERED PROFESSIONAL ENGINEER
No. 13339
8-19-13
LARRY W. MILLER
BRIDGE ENGINEER

SHEET 1 OF 2
DETAILS OF ELASTOMERIC BEARINGS MAIN STREET

ROUTE 67 SEC. 10

ARKANSAS STATE HIGHWAY COMMISSION

LITTLE ROCK, ARK.

DRAWN BY: DLM DATE: 01-13

CHECKED BY: GS DATE: 03-01-13

DESIGNED BY: DLM DATE: 01-13

FILENAME: b061276m2_el.dgn

SCALE: As Shown

BRIDGE NO. A&B7283 DRAWING NO. 53673

DATE REVISED	DATE FILMED	DATE REVISED	DATE FILMED	FED. ROAD DIST. NO.	STATE	FED. AID PROJ. NO.	SHEET NO.	TOTAL SHEETS
				6	ARK.			
				JOB NO.		061276	270	438
				(1)	A&B7283	ELASTOMERIC BEARINGS		53674

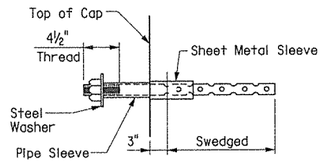

ANCHOR BOLT DETAIL

NOTE:
Anchor Bolts may be cast in place or drilled and grouted into place. If Anchor Bolts are to be cast in place, the Galvanized Sheet Metal Sleeves will not be required. If Anchor Bolts are to be drilled and grouted in place, the Galvanized Sheet Metal Sleeves shall be cast in place as shown. Sleeves shall be dry packed with styrofoam, urethane foam, or approved equal prior to pouring of concrete. After pouring of the cap and prior to erection of Structural Steel, the dry pack shall be removed and holes for the anchor bolts shall be accurately drilled into the masonry. Bolts placed in drilled holes shall be accurately set and fixed using a QPL approved epoxy or non-shrink grout that completely fills the holes. Galvanized Sheet Metal Sleeves will not be paid for directly, but will be considered subsidary to the item "STRUCTURAL STEEL IN BEAM SPANS, (M 270, Gr. 50)".

GENERAL NOTES

Elastomeric Bearings shall conform to Section 808 of the Standard Specifications and shall be paid for at the unit price bid for "ELASTOMERIC BEARINGS." Bearings shall be seated in accordance with Subsection 808.08. Long-term duration testing of random lot samples specified in Subsection 808.05 is not required. See Special Provision Job 061276 "ELASTOMERIC BEARINGS".

External load plates shall conform to AASHTO M 270, Grade 50. Pipe sleeves shall be ASTM A 53, Grade B, and shall be galvanized to conform to AASHTO M 232, Class C or ASTM B695, Class 50. External load plates shall be completely fabricated (including bevel and bolt holes) and shall be cleaned before vulcanizing to the elastomeric bearing. The surface in contact with the elastomeric bearing shall be cleaned in accordance with subsection 808.03. Other surfaces shall be blast cleaned in accordance with subsection 807.84(b) for painted steel.

Anchor Bolts, Washers, and Nuts shall conform to subsection 807.07 of the Standard Specifications. The anchor bolt grade of steel shall be as specified in the "TABLE OF FABRICATOR VARIABLES". Indentations shall be circular with rounded bottoms and staggered as shown in the details.

Pipe Sleeves, Anchor Bolts, Washers, and Nuts shall be paid for at the unit price bid for "STRUCTURAL STEEL IN BEAM SPANS (M 270, Gr. 50)".

Unless otherwise approved by the Engineer, welding of the external load plate at expansion bearings to the beam will be allowed only when 1) the approximate average air temperature during the 24 hour period immediately preceding welding is between 40°F and 80°F; and 2) the slots in the external load plate are positioned to center on the anchor bolts; and 3) no horizontal deformation of the elastomeric pad is evident. If welding at other temperatures is required, the Engineer will provide adjustment data.

External load plates shall be painted in accordance with Section 807.75. The color of the paint shall be Aluminum and shall match Fed. Std. 595B, Color Chip No. 37200. Mask areas that are to be welded in the field.

STATE OF ARKANSAS
REGISTERED PROFESSIONAL ENGINEER
No. 11339
3-24-14
LARRY W. MILLER
BRIDGE ENGINEER

SHEET 2 OF 2
DETAILS OF ELASTOMERIC BEARINGS
MAIN STREET

ROUTE 67 SEC. 10

ARKANSAS STATE HIGHWAY COMMISSION
LITTLE ROCK, ARK.

DRAWN BY: DLM DATE: 01-13
CHECKED BY: GS DATE: 03-01-13
DESIGNED BY: DLM DATE: 01-13
FILENAME: b061276m2_e2.dgn
SCALE: As Shown

BRIDGE NO. A&B7283 DRAWING NO. 53674

DATE REVISED	DATE FILMED	DATE REVISED	DATE FILMED	FED. ROAD DIST. NO.	STATE	FED. AID PROJ. NO.	SHEET NO.	TOTAL SHEETS
				6	ARK.			
				JOB NO.		061276	271	438
				(1) A&B7283		APP. GUTTERS & SLABS		53675

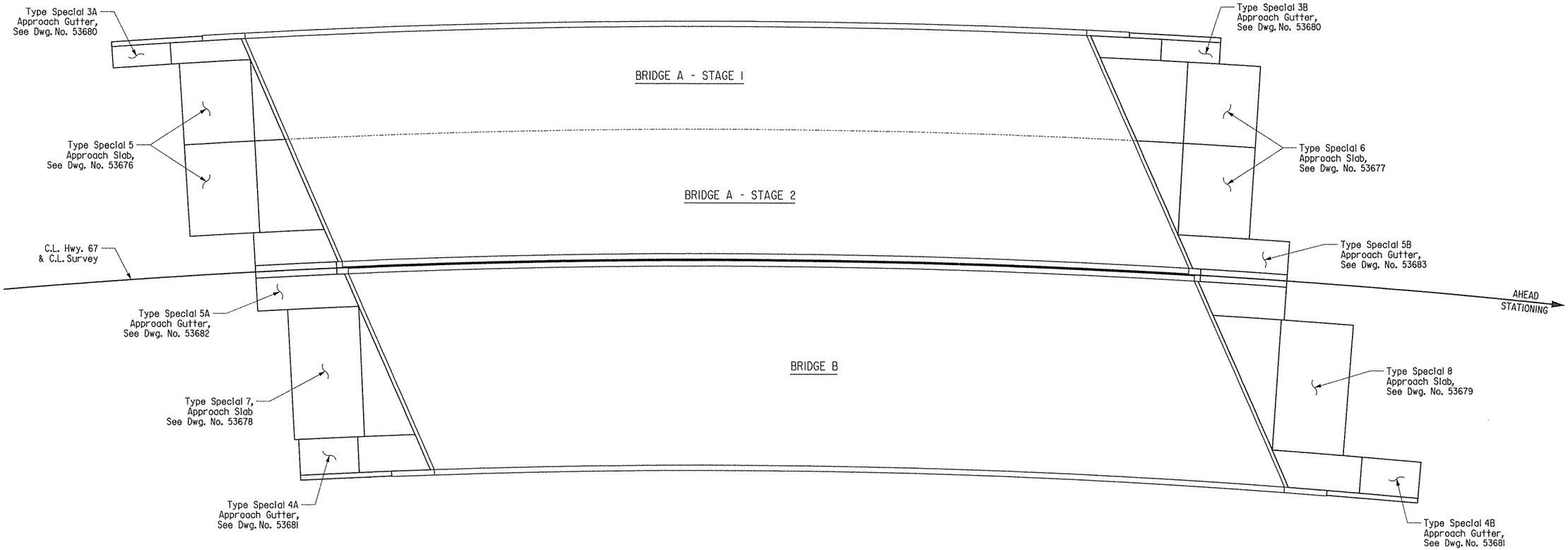

PLAN OF APPROACH GUTTERS AND SLABS

STATE OF ARKANSAS
REGISTERED PROFESSIONAL ENGINEER
No. 11339
8-19-13
LARRY W. MILLER
BRIDGE ENGINEER

APPROACH GUTTERS AND APPROACH SLABS LAYOUT MAIN STREET

ROUTE 67 SEC. 10

ARKANSAS STATE HIGHWAY COMMISSION

LITTLE ROCK, ARK.

DRAWN BY: JAP DATE: 02-13
CHECKED BY: GS DATE: 03-01-13
DESIGNED BY: LWM DATE: 02-13

FILENAME: b061276m2_asl.dgn
SCALE: No Scale

BRIDGE NO. A&B7283 DRAWING NO. 53675

DATE REVISED	DATE FILMED	DATE REVISED	DATE FILMED

FED. ROAD DIST. NO.	STATE	FED. AID PROJ. NO.	SHEET NO.	TOTAL SHEETS
6	ARK.			
JOB NO.		061276	272	438
(1) A7283		APPROACH SLAB 5		53676

NOTE: Construct Approach Slab, including longitudinal reinforcing, on concentric arcs to C.L. Hwy. 67.

NOTE: All transverse reinforcing steel shall be placed on radial lines. Spacing is measured along right edge of slab (right is defined by direction of stationing).

(1) 2" x ¼" Poured Synthetic Polymer Joint Sealer Type 3 or 4 as per Subsection 501.02(h)(2). Backer rod is not required.

(A) F407-F411 (Slab Support) - 4 Spa. @ 1'-0" = 4'-0"

(B) S402-S409 - 7 Spa. @ 1'-0" Max. (Top)

(C) S502-S509 - 7 Spa. @ 1'-0" Max. (Bottom)

(D) S428-S436 - 8 Spa. @ 1'-0" Max. (Top)

(E) S512-S520 - 8 Spa. @ 1'-0" Max. (Bottom)

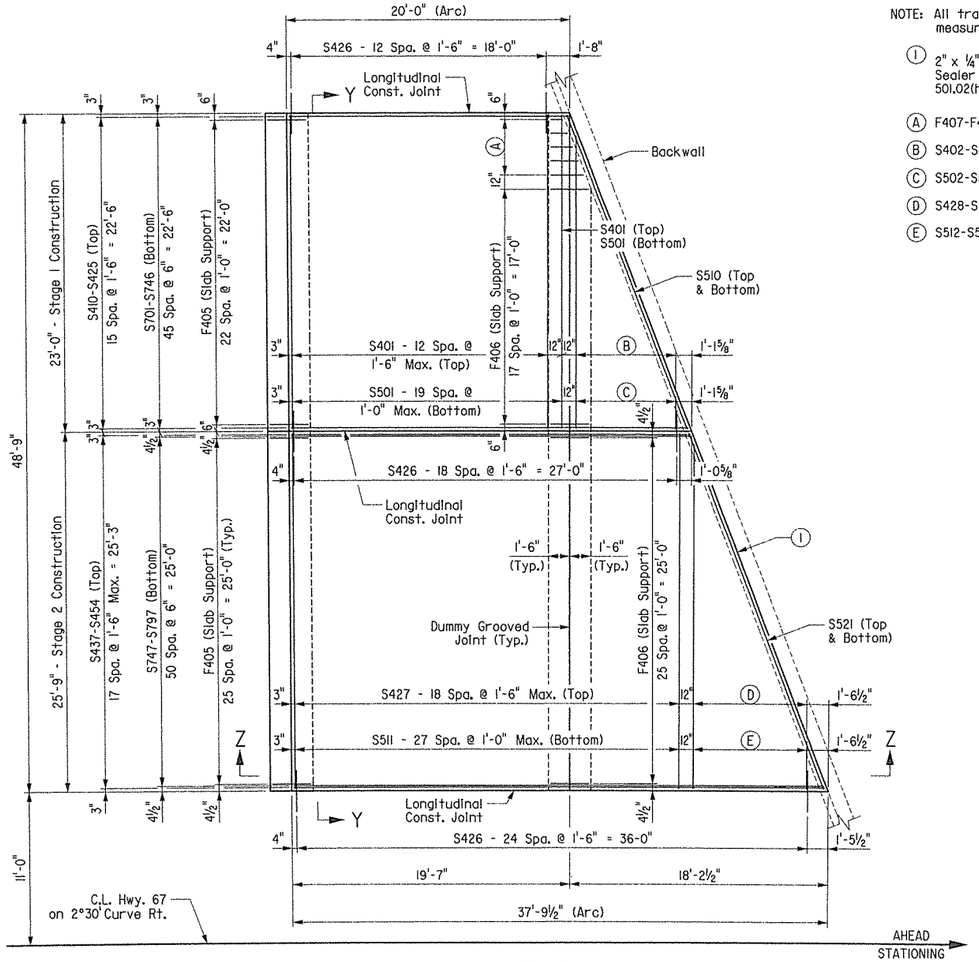

PLAN

Scale: 3/16" = 1'-0"

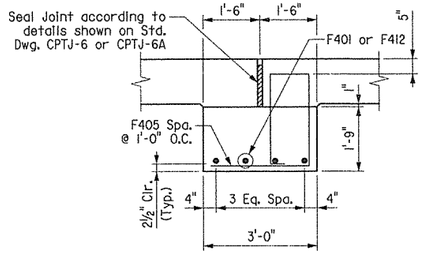

DETAILS OF SUPPORT AT END OF SLAB

Scale: ½" = 1'-0"

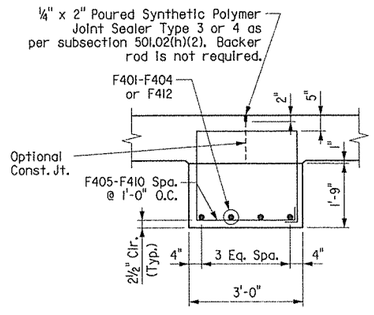

DETAILS OF INTERIOR SUPPORT OF SLAB

Scale: ½" = 1'-0"

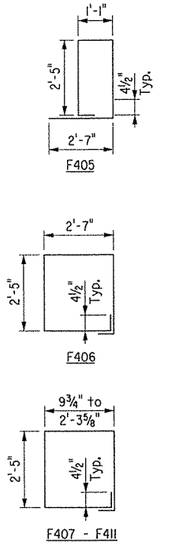

BAR LIST - ONE TYPE 5 SPECIAL APPROACH SLAB

Mark	No. Req'd.	Length	Pin Dia.
F401	5	22'-8"	Str.
F402 to F404	1 Each	21'-11" to 17'-9"	Str.
F405	49	8'-10"	2"
F406	44	10'-4"	2"
F407 to F411	1 Each	9'-10" to 6'-10"	2"
F412	8	25'-5"	Str.
S401	14	22'-8"	Str.
S402 to S409	1 Each	21'-2" to 2'-4"	Str.
S410 to S425	1 Each	19'-9" to 27'-11"	Str.
S426	57	3'-0"	Str.
S427	19	25'-5"	Str.
S428 to S436	1 Each	24'-7" to 3'-5"	Str.
S437 to S454	1 Each	28'-1" to 37'-4"	Str.
S501	20	22'-8"	Str.
S502 to S509	1 Each	21'-2" to 2'-4"	Str.
S510	2	24'-2"	Str.
S511	28	25'-5"	Str.
S512 to S520	1 Each	24'-7" to 3'-5"	Str.
S521	2	27'-2"	Str.
S701 to S746	1 Each	19'-9" to 27'-11"	Str.
S747 to S797	1 Each	28'-2" to 37'-3"	Str.

QUANTITIES FOR ONE TYPE 5 SPECIAL APPROACH SLAB

Reinforcing Steel (Lbs.)	Concrete (Cu. Yds.)
9,518	82.52

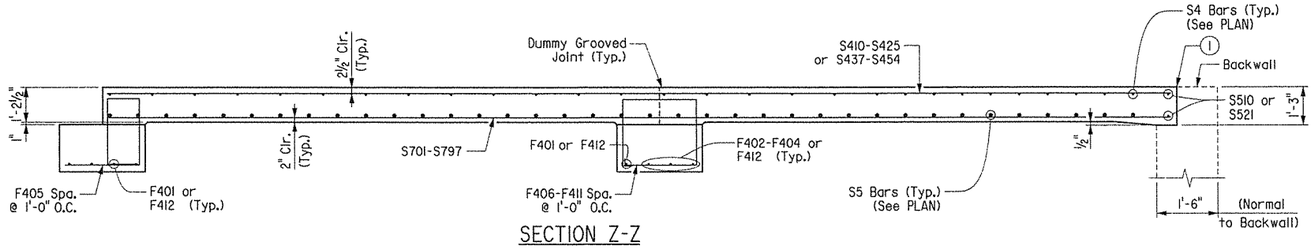

SECTION Z-Z

Scale: 3/8" = 1'-0"

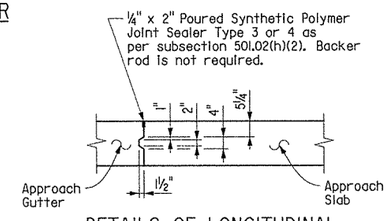

DETAILS OF LONGITUDINAL CONSTRUCTION JOINT

Scale: ½" = 1'-0"

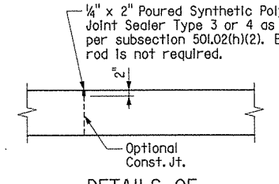

DETAILS OF DUMMY GROOVED JOINT

Scale: ½" = 1'-0"

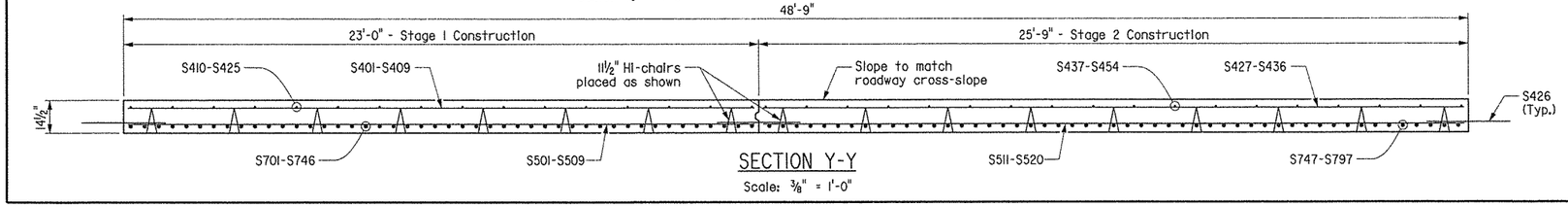

SECTION Y-Y

Scale: 3/8" = 1'-0"

STATE OF ARKANSAS REGISTERED PROFESSIONAL ENGINEER No. 11339 3-24-14 LEON W. MILLER

BRIDGE ENGINEER

DETAILS OF TYPE SPECIAL 5 APPROACH SLABS MAIN STREET

ROUTE 67 SEC. 10

ARKANSAS STATE HIGHWAY COMMISSION

LITTLE ROCK, ARK.

DRAWN BY: JAP DATE: 02-13 FILENAME: b061276a2_as5.dgn

CHECKED BY: GS DATE: 03-01-13 SCALE: As Shown

DESIGNED BY: LWM DATE: 02-13

BRIDGE NO. A7283 DRAWING NO. 53676

DATE REVISED	DATE FILMED	DATE REVISED	DATE FILMED

FED. ROAD DIST. NO.	STATE	FED. AID PROJ. NO.	SHEET NO.	TOTAL SHEETS
6	ARK.			
JOB NO.		061276	273	438
(I) A7283		APPROACH SLAB 6		53677

NOTE: Construct Approach Slab, including longitudinal reinforcing, on concentric arcs to C.L. Hwy. 67.

NOTE: All transverse reinforcing steel shall be placed on radial lines. Spacing is measured along right edge of slab (right is defined by direction of stationing).

(I) 2" x ¼" Poured Synthetic Polymer Joint Sealer Type 3 or 4 as per Subsection 501.02(h)(2). Backer rod is not required.

(A) F407-F410 (Slab Support) - 3 Spa. @ 1'-0" = 3'-0"

(B) S402-S412 - 10 Spa. @ 1'-0" Max. (Top)

(C) S502-S512 - 10 Spa. @ 1'-0" Max. (Bottom)

(D) S431-S442 - 11 Spa. @ 1'-0" Max. (Top)

(E) S515-S526 - 11 Spa. @ 1'-0" Max. (Bottom)

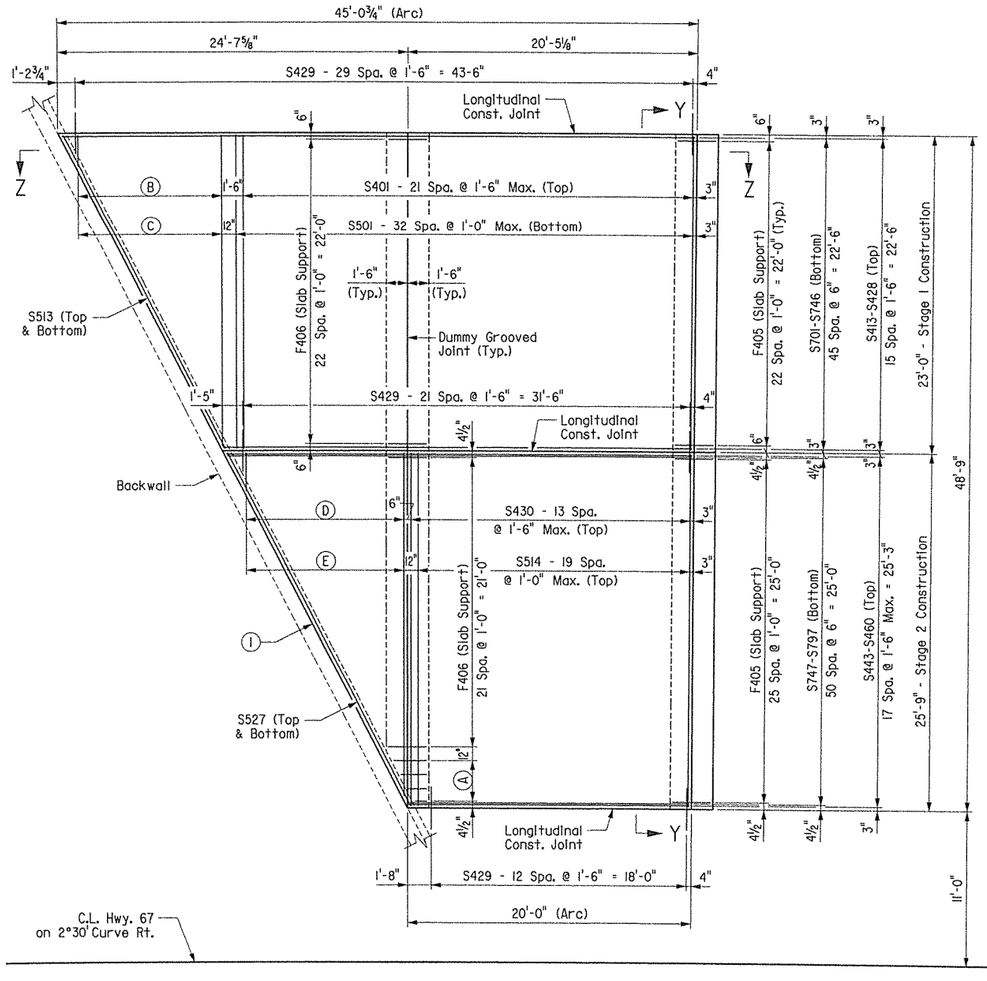

PLAN

Scale: 3/16" = 1'-0"

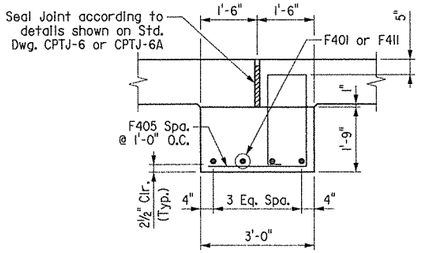

DETAILS OF SUPPORT AT END OF SLAB

Scale: ½" = 1'-0"

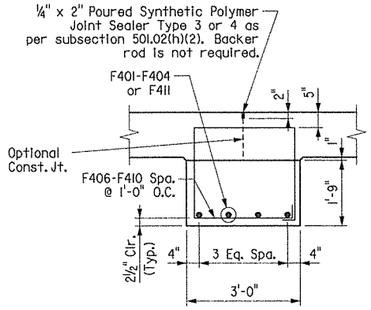

DETAILS OF INTERIOR SUPPORT OF SLAB

Scale: ½" = 1'-0"

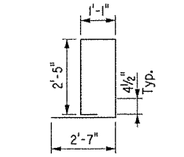

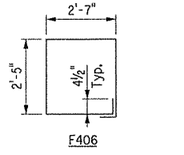

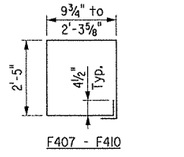

BAR LIST - ONE TYPE 6 SPECIAL APPROACH SLAB

Mark	No. Req'd.	Length	Pin Dia.
F401	5	25'-5"	Str.
F402 to F404	1 Each	24'-10" to 21'-9"	Str.
F405	49	8'-10"	2"
F406	45	10'-4"	2"
F407 to F410	1 Each	9'-8" to 6'-8"	2"
F411	8	22'-8"	Str.
S401	22	22'-8"	Str.
S402 to S412	1 Each	22'-5" to 2'-3"	Str.
S413 to S428	1 Each	44'-7" to 33'-0"	Str.
S429	65	3'-0"	Str.
S430	14	25'-5"	Str.
S431 to S442	1 Each	24'-8" to 2'-9"	Str.
S443 to S460	1 Each	32'-9" to 19'-9"	Str.
S501	33	22'-8"	Str.
S502 to S512	1 Each	22'-5" to 2'-3"	Str.
S513	2	25'-3"	Str.
S514	20	25'-5"	Str.
S515 to S526	1 Each	24'-8" to 2'-9"	Str.
S527	2	28'-5"	Str.
S701 to S746	1 Each	44'-7" to 33'-0"	Str.
S747 to S797	1 Each	32'-8" to 19'-10"	Str.

QUANTITIES FOR ONE TYPE 6 SPECIAL APPROACH SLAB

Reinforcing Steel (Lbs.)	Concrete (Cu. Yds.)
10,626	90.65

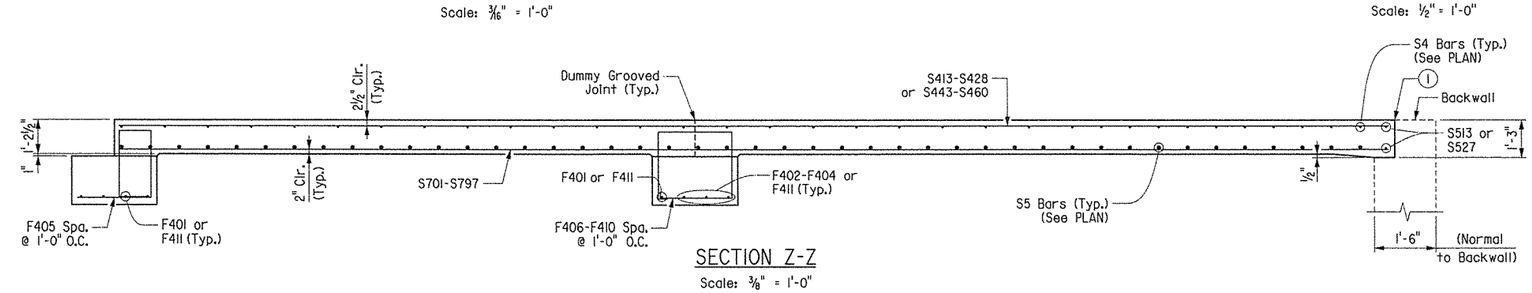

SECTION Z-Z

Scale: 3/8" = 1'-0"

DETAILS OF LONGITUDINAL CONSTRUCTION JOINT

Scale: ½" = 1'-0"

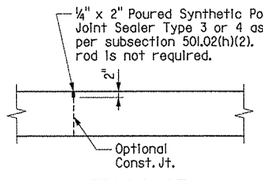

DETAILS OF DUMMY GROOVED JOINT

Scale: ½" = 1'-0"

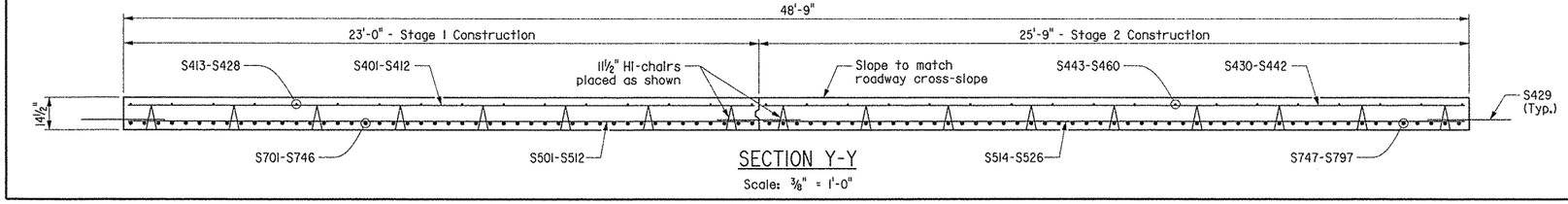

SECTION Y-Y

Scale: 3/8" = 1'-0"

STATE OF ARKANSAS
Larry W. Millis
REGISTERED PROFESSIONAL ENGINEER
No. 13339
3-24-14
LARRY W. MILLIS
BRIDGE ENGINEER

DETAILS OF TYPE SPECIAL 6 APPROACH SLABS MAIN STREET

ROUTE 67 SEC. 10

ARKANSAS STATE HIGHWAY COMMISSION

LITTLE ROCK, ARK.

DRAWN BY: JAP DATE: 02-13

CHECKED BY: GS DATE: 03-01-13

DESIGNED BY: LWM DATE: 02-13

FILENAME: b061276a2_as6.dgn

SCALE: As Shown

BRIDGE NO. A7283

DRAWING NO. 53677

NOTE: Construct Approach Slab, including longitudinal reinforcing, on concentric arcs to C.L. Hwy. 67.

NOTE: All transverse reinforcing steel shall be placed on radial lines. Spacing is measured along right edge of slab (right is defined by direction of stationing).

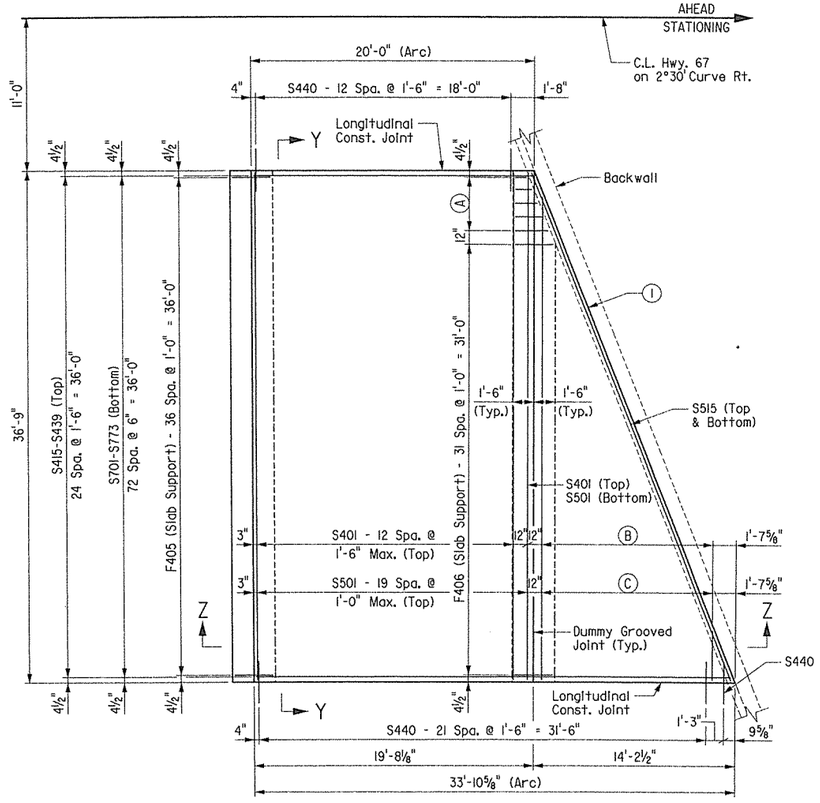

PLAN

Scale: 3/16" = 1'-0"

(I) 2" x ¼" Poured Synthetic Polymer Joint Sealer Type 3 or 4 as per Subsection 501.02(h)(2). Backer rod is not required.

(A) F407-F411 (Slab Support) - 4 Spa. @ 1'-0" = 4'-0"

(B) S402-S414 - 12 Spa. @ 1'-0" Max. (Top)

(C) S502-S514 - 12 Spa. @ 1'-0" Max. (Bottom)

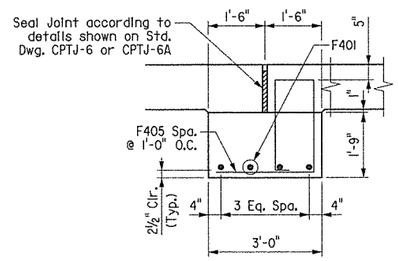

DETAILS OF SUPPORT AT END OF SLAB

Scale: ½" = 1'-0"

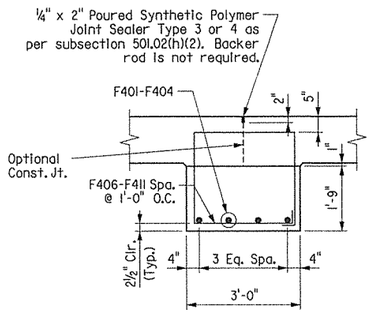

DETAILS OF INTERIOR SUPPORT OF SLAB

Scale: ½" = 1'-0"

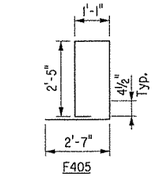

DATE REVISED	DATE FILMED	DATE REVISED	DATE FILMED	FED. ROAD DIST. NO.	STATE	FED. AID PROJ. NO.	SHEET NO.	TOTAL SHEETS
				6	ARK.			
				JOB NO.		061276	274	438
				(I) B7283		APPROACH SLAB 7		53678

BAR LIST - ONE TYPE 7 SPECIAL APPROACH SLAB

Mark	No. Req'd.	Length	Pin Dia.
F401	5	36'-5"	Str.
F402 to F404	1 Each	35'-9" to 31'-8"	Str.
F405	37	8'-10"	2"
F406	32	10'-4"	2"
F407 to F411	1 Each	9'-9" to 6'-8"	2"
S401	14	36'-5"	Str.
S402 to S414	1 Each	34'-7" to 3'-6"	Str.
S415 to S439	1 Each	19'-9" to 33'-5"	Str.
S440	36	3'-0"	Str.
S501	20	36'-5"	Str.
S502 to S514	1 Each	34'-7" to 3'-6"	Str.
S515	2	39'-1"	Str.
S701 to S773	1 Each	19'-9" to 33'-5"	Str.

QUANTITIES FOR ONE TYPE 7 SPECIAL APPROACH SLAB

Reinforcing Steel (Lbs.)	Concrete (Cu. Yds.)
6,744	58.92

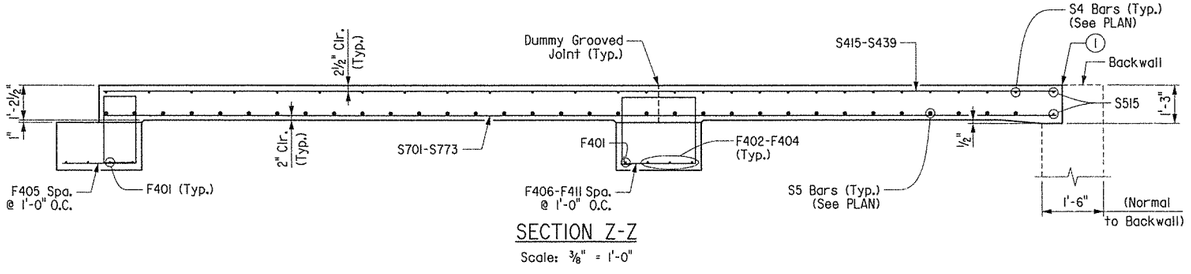

SECTION Z-Z

Scale: 3/8" = 1'-0"

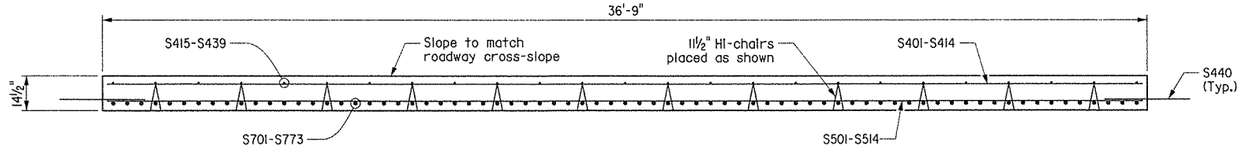

SECTION Y-Y

Scale: 3/8" = 1'-0"

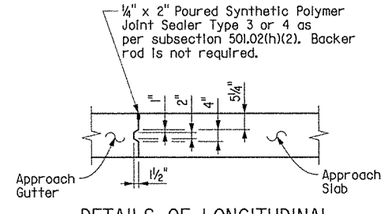

DETAILS OF LONGITUDINAL CONSTRUCTION JOINT

Scale: ½" = 1'-0"

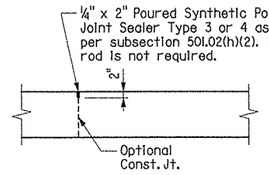

DETAILS OF DUMMY GROOVED JOINT

Scale: ½" = 1'-0"

STATE OF ARKANSAS
REGISTERED PROFESSIONAL ENGINEER
No. 13339
3-24-14
LARRY W. MILLER
BRIDGE ENGINEER

DETAILS OF TYPE SPECIAL 7 APPROACH SLABS MAIN STREET

ROUTE 67 SEC. 10

ARKANSAS STATE HIGHWAY COMMISSION

LITTLE ROCK, ARK.

DRAWN BY: JAP DATE: 02-13 FILENAME: b061276b2_as7.dgn

CHECKED BY: GS DATE: 03-01-13 SCALE: As Shown

DESIGNED BY: LWM DATE: 02-13

BRIDGE NO. B7283 DRAWING NO. 53678

NOTE: Construct Approach Slab, including longitudinal reinforcing, on concentric arcs to C.L. Hwy. 67.

NOTE: All transverse reinforcing steel shall be placed on radial lines. Spacing is measured along right edge of slab (right is defined by direction of stationing).

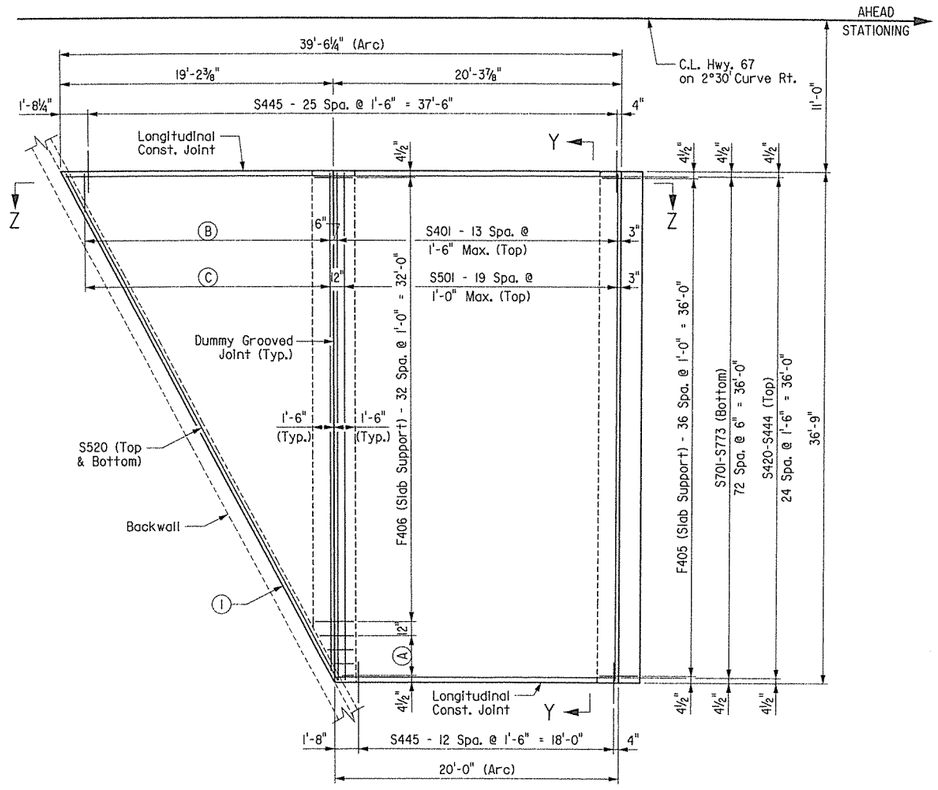

PLAN

Scale: 3/16" = 1'-0"

1 2" x ¼" Poured Synthetic Polymer Joint Sealer Type 3 or 4 as per Subsection 501.02(h)(2). Backer rod is not required.

A F407-F410 (Slab Support) - 3 Spa. @ 1'-0" = 4'-0"

B S402-S419 - 17 Spa. @ 1'-0" Max. (Top)

C S502-S519 - 17 Spa. @ 1'-0" Max. (Bottom)

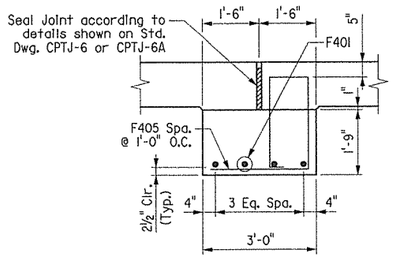

DETAILS OF SUPPORT AT END OF SLAB

Scale: ½" = 1'-0"

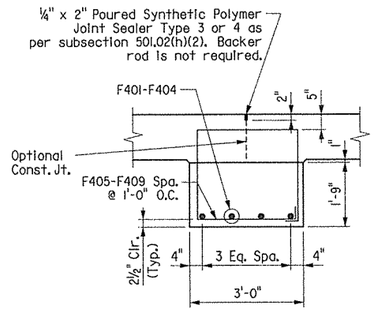

DETAILS OF INTERIOR SUPPORT OF SLAB

Scale: ½" = 1'-0"

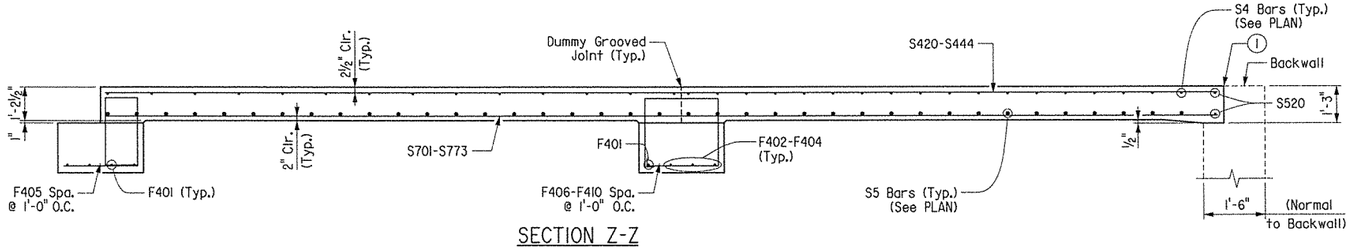

SECTION Z-Z

Scale: 3/8" = 1'-0"

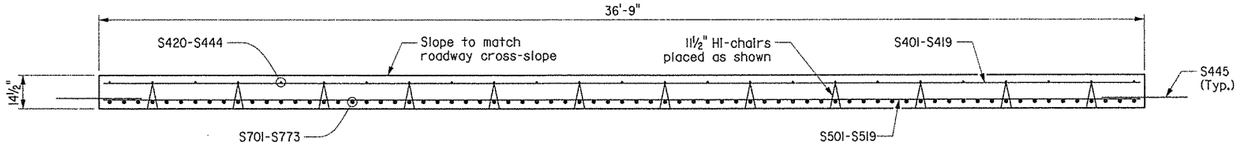

SECTION Y-Y

Scale: 3/8" = 1'-0"

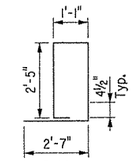

F405

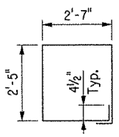

F406

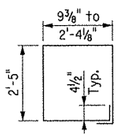

F407 - F410

DATE REVISED	DATE FILMED	DATE REVISED	DATE FILMED

FED. ROAD DIST. NO.	STATE	FED. AID PROJ. NO.	SHEET NO.	TOTAL SHEETS
6	ARK.			
JOB NO.		061276	275	438
1 B7283		APPROACH SLAB 8		53679

BAR LIST - ONE TYPE 8 SPECIAL APPROACH SLAB

Mark	No. Req'd.	Length	Pin Dia.
F401	5	36'-5"	Str.
F402 to F404	1 Each	35'-10" to 32'-11"	Str.
F405	37	8'-10"	2"
F406	33	10'-4"	2"
F407 to F410	1 Each	9'-10" to 6'-9"	2"
S401	14	36'-5"	Str.
S402 to S419	1 Each	35'-9" to 2'-8"	Str.
S420 to S444	1 Each	19'-10" to 38'-11"	Str.
S445	39	3'-0"	Str.
S501	20	36'-5"	Str.
S502 to S519	1 Each	35'-9" to 2'-8"	Str.
S520	2	41'-0"	Str.
S701 to S773	1 Each	19'-10" to 38'-11"	Str.

QUANTITIES FOR ONE TYPE 8 SPECIAL APPROACH SLAB

Reinforcing Steel (Lbs.)	Concrete (Cu. Yds.)
7,389	63.64

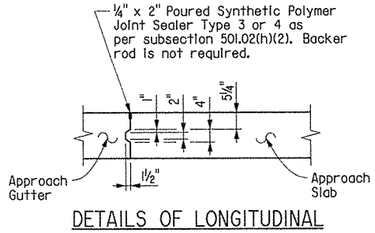

DETAILS OF LONGITUDINAL CONSTRUCTION JOINT

Scale: ½" = 1'-0"

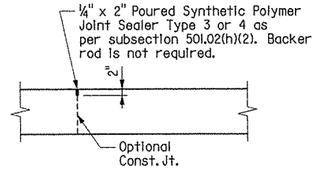

DETAILS OF DUMMY GROOVED JOINT

Scale: ½" = 1'-0"

STATE OF ARKANSAS
Larry W. Miller
REGISTERED PROFESSIONAL ENGINEER
No. 11539
3-24-14
LARRY W. MILLER
BRIDGE ENGINEER

DETAILS OF TYPE SPECIAL 8 APPROACH SLABS MAIN STREET

ROUTE 67 SEC. 10

ARKANSAS STATE HIGHWAY COMMISSION

LITTLE ROCK, ARK.

DRAWN BY: JAP DATE: 02-13

CHECKED BY: GS DATE: 03-01-13

DESIGNED BY: LWM DATE: 02-13

FILENAME: b061276b2_as8.dgn

SCALE: As Shown

BRIDGE NO. B7283 DRAWING NO. 53679

NOTE: Construct Approach Gutter on concentric arcs to C.L. Hwy. 67.

NOTE: All transverse reinforcing steel shall be placed on radial lines. Spacing is measured along right edge of slab (right is defined by direction of stationing).

(1) 2" x ¼" Poured Synthetic Polymer Joint Sealer Type 3 or 4 as per Subsection 501.02(h)(2). Backer rod is not required.

(2) See End Bent Details for construction of 12'-0" Rail and Wingwall.

(A) G513 - 2 Spa. @ 5½" = 11"

DATE REVISED	DATE FILMED	DATE REVISED	DATE FILMED

FED. ROAD DIST. NO.	STATE	FED. AID PROJ. NO.	SHEET NO.	TOTAL SHEETS
6	ARK.			
JOB NO.		061276	276	438
(1) A7283		APPROACH GUTTER 3		53680

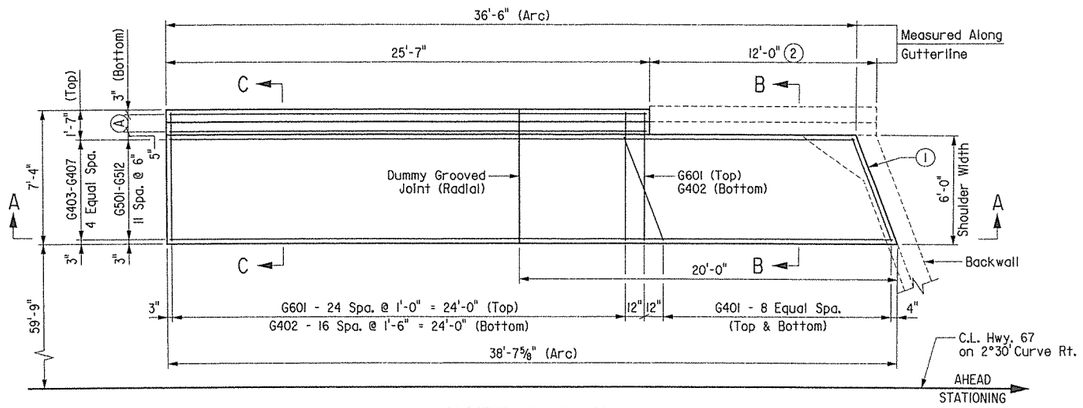

GUTTER 3A PLAN

Scale: ¼" = 1'-0"

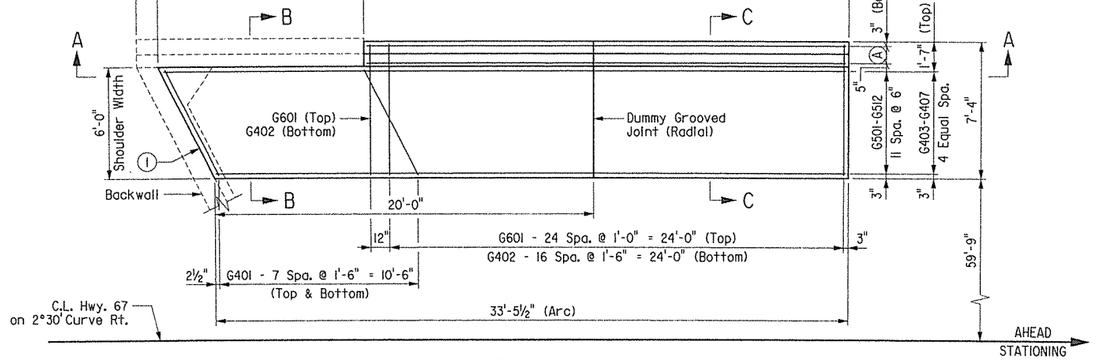

GUTTER 3B PLAN

Scale: ¼" = 1'-0"

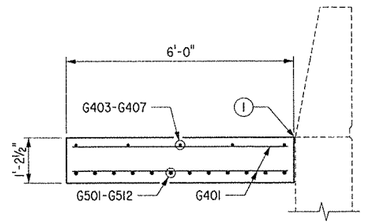

SECTION B-B

Scale: ½" = 1'-0"

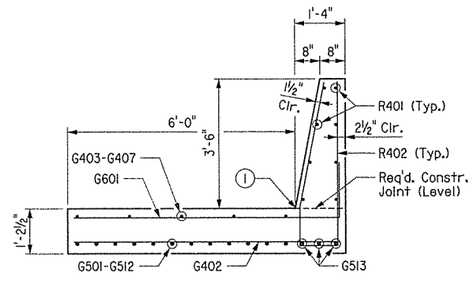

SECTION C-C

Scale: ½" = 1'-0"

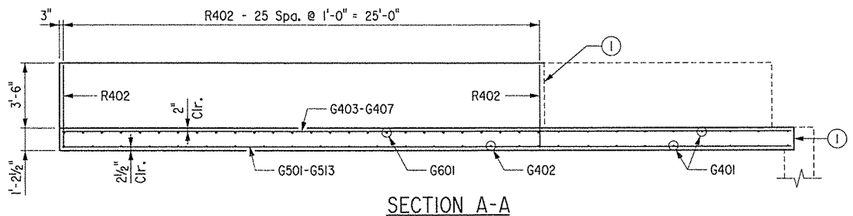

SECTION A-A

Scale: ¼" = 1'-0"
(Gutter 3A Shown, Gutter 3B Similar)

BAR LIST - ONE TYPE 3A SPECIAL APPROACH GUTTER

Mark	No. Req'd.	Length	Pin Dia.
G401	18	6'-0"	Str.
G402	18	7'-0"	Str.
G403 to G407	1 Each	38'-2" to 36'-3"	Str.
G501 to G512	1 Each	38'-2" to 36'-3"	Str.
G513	3	25'-3"	Str.
G601	26	8'-6"	4½"
R401	8	25'-3"	Str.
R402	26	9'-9"	2"

BAR LIST - ONE TYPE 3B SPECIAL APPROACH GUTTER

Mark	No. Req'd.	Length	Pin Dia.
G401	16	6'-4"	Str.
G402	18	7'-0"	Str.
G403 to G407	1 Each	36'-0" to 33'-2"	Str.
G501 to G512	1 Each	36'-0" to 33'-2"	Str.
G513	3	25'-3"	Str.
G601	26	8'-6"	4½"
R401	8	25'-3"	Str.
R402	26	9'-9"	2"

QUANTITIES FOR ONE TYPE 3A SPECIAL APPROACH GUTTER

Reinforcing Steel (Lbs.)	Concrete (Cu. Yds.)
1,467	14.93

QUANTITIES FOR ONE TYPE 3B SPECIAL APPROACH GUTTER

Reinforcing Steel (Lbs.)	Concrete (Cu. Yds.)
1,420	14.24

Bending Diagrams

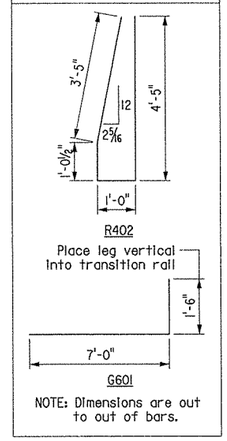

NOTE: Dimensions are out to out of bars.

STATE OF ARKANSAS
Larry W. Miller
REGISTERED PROFESSIONAL ENGINEER
No. 13339
3-24-14
LARRY W. MILLER
BRIDGE ENGINEER

DETAILS OF TYPE SPECIAL 3 APPROACH GUTTERS MAIN STREET

ROUTE 67 SEC. 10

ARKANSAS STATE HIGHWAY COMMISSION

LITTLE ROCK, ARK.

DRAWN BY: JAP DATE: 03-13 FILENAME: b061276a2_g3.dgn

CHECKED BY: GS DATE: 03-01-13 SCALE: As Shown

DESIGNED BY: LWM DATE: 03-13

BRIDGE NO. A7283 DRAWING NO. 53680

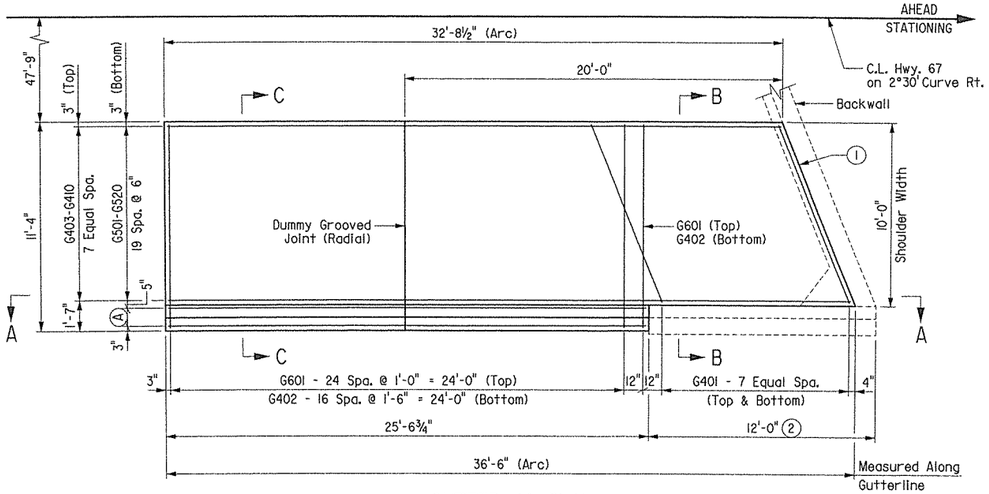

GUTTER 4A PLAN

Scale: ¼" = 1'-0"

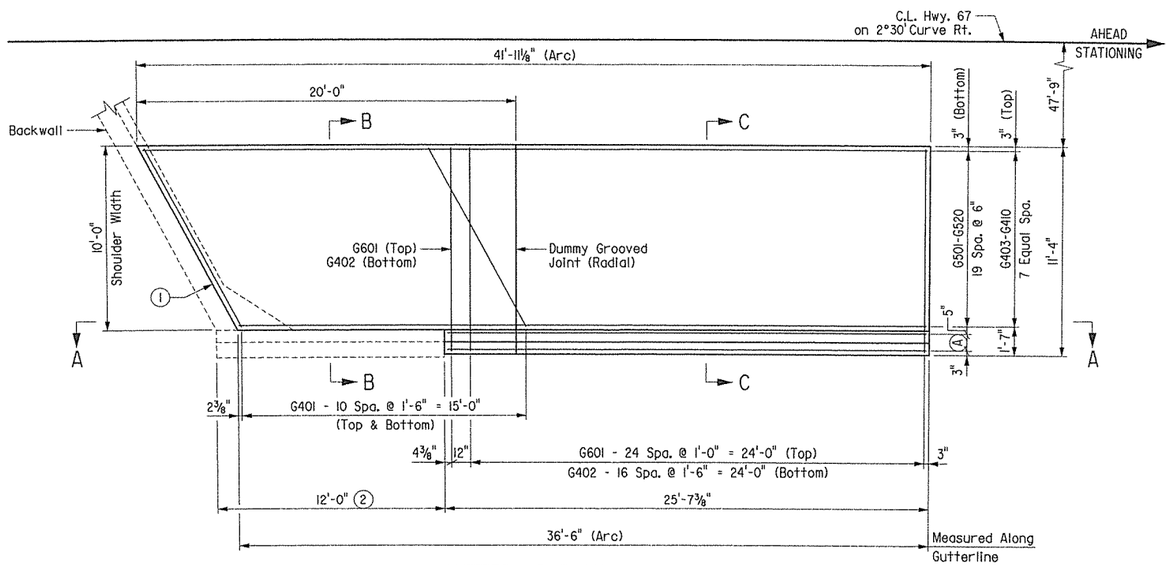

GUTTER 4B PLAN

Scale: ¼" = 1'-0"

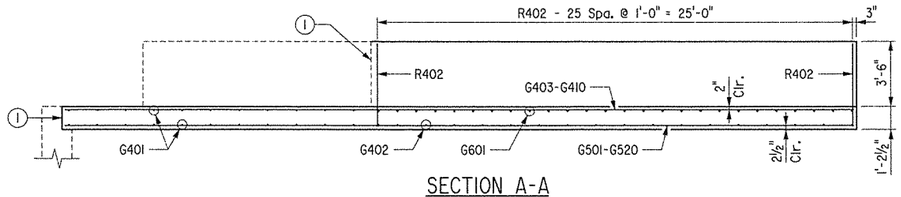

SECTION A-A

Scale: ¼" = 1'-0"
(Gutter 4A Shown, Gutter 4B Similar)

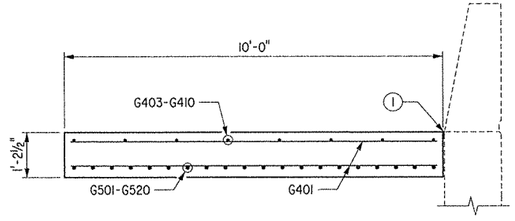

SECTION B-B

Scale: ½" = 1'-0"

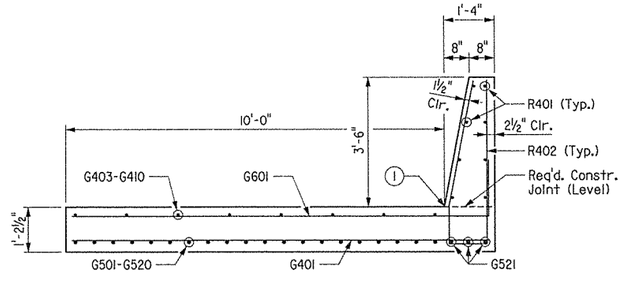

SECTION C-C

Scale: ½" = 1'-0"

NOTE: Construct Approach Gutter on concentric arcs to C.L. Hwy. 67.

NOTE: All transverse reinforcing steel shall be placed on radial lines. Spacing is measured along right edge of slab (right is defined by direction of stationing).

(1) 2" x ¼" Poured Synthetic Polymer Joint Sealer Type 3 or 4 as per Subsection 501.02(h)(2). Backer rod is not required.

(2) See End Bent Details for construction of 12'-0" Rail and Wingwall.

(A) G521 - 2 Spa. @ 5½" = 11"

DATE REVISED	DATE FILMED	DATE REVISED	DATE FILMED

FED. ROAD DIST. NO.	STATE	FED. AID PROJ. NO.	SHEET NO.	TOTAL SHEETS
6	ARK.			
JOB NO.		061276	277	438
(1) B7283		APPROACH GUTTER 4		53681

BAR LIST - ONE TYPE 4A SPECIAL APPROACH GUTTER

Mark	No. Req'd.	Length	Pin Dia.
G401	16	10'-4"	Str.
G402	18	11'-0"	Str.
G403 to G410	1 Each	32'-5" to 36'-0"	Str.
G501 to G520	1 Each	32'-5" to 36'-0"	Str.
G521	3	25'-2"	Str.
G601	26	12'-6"	4½"
R401	8	25'-2"	Str.
R402	26	9'-9"	2"

BAR LIST - ONE TYPE 4B SPECIAL APPROACH GUTTER

Mark	No. Req'd.	Length	Pin Dia.
G401	22	10'-11"	Str.
G402	18	11'-0"	Str.
G403 to G410	1 Each	41'-5" to 36'-3"	Str.
G501 to G520	1 Each	41'-5" to 36'-3"	Str.
G521	3	25'-3"	Str.
G601	26	12'-6"	4½"
R401	8	25'-3"	Str.
R402	26	9'-9"	2"

QUANTITIES FOR ONE TYPE 4A SPECIAL APPROACH GUTTER

Reinforcing Steel (Lbs.)	Concrete (Cu. Yds.)
2,017	20.33

QUANTITIES FOR ONE TYPE 4B SPECIAL APPROACH GUTTER

Reinforcing Steel (Lbs.)	Concrete (Cu. Yds.)
2,189	22.40

Bending Diagrams

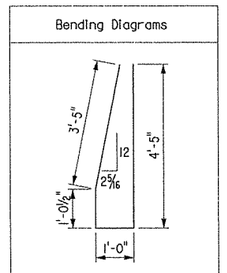

NOTE: Dimensions are out to out of bars.

STATE OF ARKANSAS
Larry W. Miller
REGISTERED PROFESSIONAL ENGINEER
No. 11339
3-24-14
LARRY W. MILLER
BRIDGE ENGINEER

DETAILS OF TYPE SPECIAL 4 APPROACH GUTTERS MAIN STREET

ROUTE 67 SEC. 10

ARKANSAS STATE HIGHWAY COMMISSION

LITTLE ROCK, ARK.

DRAWN BY: JAP DATE: 03-13 FILENAME: b061276b2_g4.dgn
CHECKED BY: GS DATE: 03-01-13 SCALE: As Shown
DESIGNED BY: LWM DATE: 03-13

BRIDGE NO. B7283 DRAWING NO. 53681

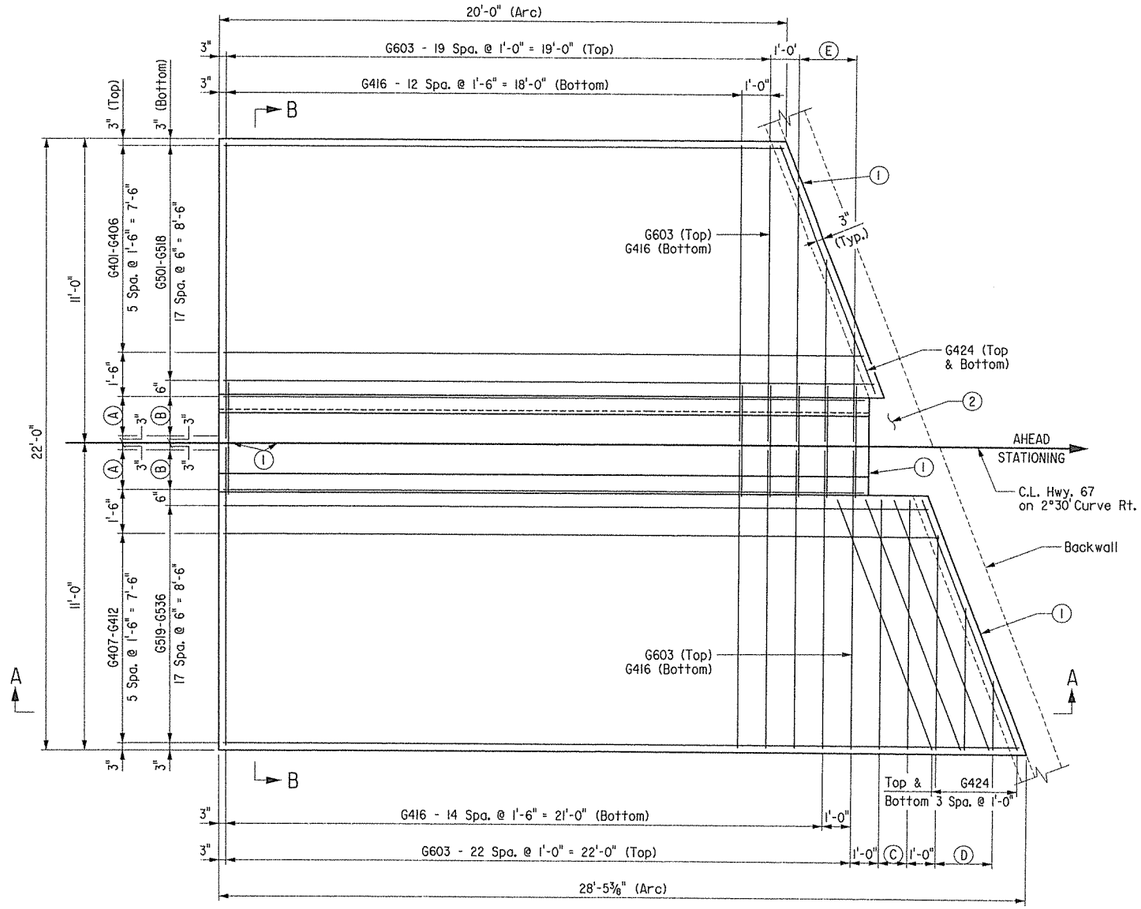

GUTTER 5A PLAN

Scale: ⅜" = 1'-0"

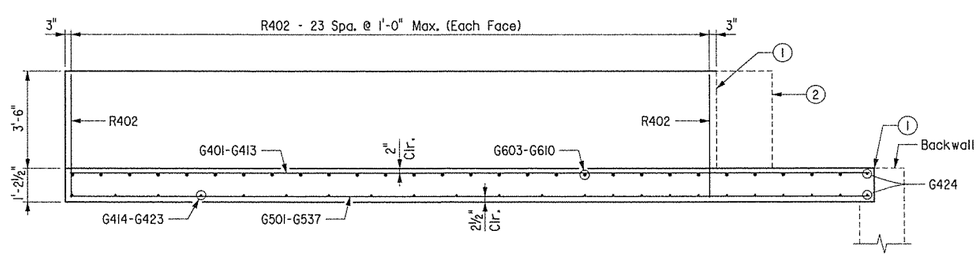

SECTION A-A

Scale: ⅜" = 1'-0"

NOTE: Construct Approach Gutter on concentric arcs to C.L. Hwy. 67.

NOTE: All transverse reinforcing steel shall be placed on radial lines. Spacing is measured along right edge of slab (right is defined by direction of stationing).

(1) 2" x ¼" Poured Synthetic Polymer Joint Sealer Type 3 or 4 as per Subsection 501.02(h)(2). Backer rod is not required.

(2) See End Bent Details for construction of Median Rail.

(A) G413 - 1 Spa. @ 1'-6" = 1'-6" (Top)

(B) G537 - 3 Spa. @ 6" = 1'-6" (Bottom)

(C) G604 - 1 Spa. @ 1'-0" = 1'-0" (Top)
G417 - 1 Spa. @ 1'-0" = 1'-0" (Bottom)

(D) G605-G607 - 2 Spa. @ 1'-0" = 2'-0" (Top)
G418-G420 - 2 Spa. @ 1'-0" = 2'-0" (Bottom)

(E) G608-G610 - 2 Spa. @ 1'-0" = 2'-0" (Top)
G421-G423 - 2 Spa. @ 1'-0" = 2'-0" (Bottom)

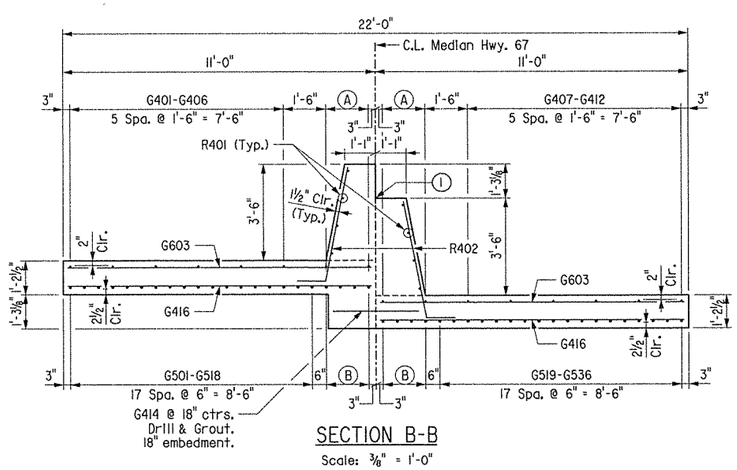

SECTION B-B

Scale: ⅜" = 1'-0"

Bending Diagrams

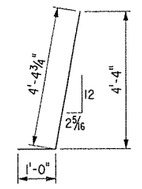

R402

NOTE: Dimensions are out to out of bars.

Mark	No. Req'd.	Length	Pin Dia.
G401 to G406	1 Each	19'-9" to 22'-7"	Str.
G407 to G412	1 Each	25'-2" to 28'-0"	Str.
G413	4	22'-6"	Str.
G414	17	3'-0"	Str.
G415	Not used		
G416	30	10'-8"	Str.
G417	2	8'-11"	Str.
G418	1	7'-8"	Str.
G419	1	5'-0"	Str.
G420	1	2'-5"	Str.
G421	1	9'-2"	Str.
G422	1	6'-7"	Str.
G423	1	3'-11"	Str.
G424	10	9'-6"	Str.
G501 to G518	1 Each	19'-9" to 22'-11"	Str.
G519 to G536	1 Each	24'-10" to 28'-0"	Str.
G537	8	22'-6"	Str.
G603	43	10'-8"	Str.
G604	2	8'-11"	Str.
G605	14	7'-8"	Str.
G606	14	5'-0"	Str.
G607	14	2'-5"	Str.
G608	1	9'-2"	Str.
G609	1	6'-7"	Str.
G610	1	3'-11"	Str.
R401	8	22'-6"	Str.
R402	48	5'-4"	2"

QUANTITIES FOR ONE TYPE 5A SPECIAL APPROACH GUTTER

Reinforcing Steel (Lbs.)	Concrete (Cu. Yds.)
3,036	33.34

DATE REVISED	DATE FILMED	DATE REVISED	DATE FILMED

FED. ROAD DIST. NO.	STATE	FED. AID PROJ. NO.	SHEET NO.	TOTAL SHEETS
6	ARK.			
JOB NO.		061276	278	438
(1) A&B7283		APPROACH GUTTER 5		53682

BAR LIST - ONE TYPE 5A SPECIAL APPROACH GUTTER

STATE OF ARKANSAS
Larry W. Miller
REGISTERED PROFESSIONAL ENGINEER
No. 13339
3-24-14
LARRY W. MILLER
BRIDGE ENGINEER

SHEET 1 OF 2
DETAILS OF
TYPE SPECIAL 5 APPROACH GUTTERS
MAIN STREET

ROUTE 67 SEC. 10

ARKANSAS STATE HIGHWAY COMMISSION

LITTLE ROCK, ARK.

DRAWN BY: JAP DATE: 03-13 FILENAME: b061276m2_g5l.dgn
CHECKED BY: GS DATE: 03-01-13 SCALE: As Shown
DESIGNED BY: LWM DATE: 03-13

BRIDGE NO. A&B7283 DRAWING NO. 53682

DATE REVISED	DATE FILMED	DATE REVISED	DATE FILMED

FED. ROAD DIST. NO.	STATE	FED. AID PROJ. NO.	SHEET NO.	TOTAL SHEETS
6	ARK.			
JOB NO.		061276	279	438
(1) A&B7283		APPROACH GUTTER 5		53683

NOTE: Construct Approach Gutter on concentric arcs to C.L. Hwy. 67.

NOTE: All transverse reinforcing steel shall be placed on radial lines. Spacing is measured along right edge of slab (right is defined by direction of stationing).

(1) 2" x ¼" Poured Synthetic Polymer Joint Sealer Type 3 or 4 as per Subsection 501.02(h)(2). Backer rod is not required.

(2) See End Bent Details for construction of Median Rail.

(A) G413 - 1 Spa. @ 1'-6" = 1'-6" (Top)

(B) G537 - 3 Spa. @ 6" = 1'-6" (Bottom)

(C) G604-G607 - 3 Spa. @ 1'-0" = 3'-0" (Top)
G417-G420 - 3 Spa. @ 1'-0" = 3'-0" (Bottom)

(D) G603 - 4 Spa. @ 1'-0" = 4'-0" (Top)
G416 - 4 Spa. @ 1'-0" = 4'-0" (Bottom)

(E) G608 - 1 Spa. @ 1'-0" = 1'-0" (Top)
G421 - 1 Spa. @ 1'-0" = 1'-0" (Bottom)

(F) G609-G612 - 3 Spa. @ 1'-0" = 3'-0" (Top)
G422-G425 - 3 Spa. @ 1'-0" = 3'-0" (Bottom)

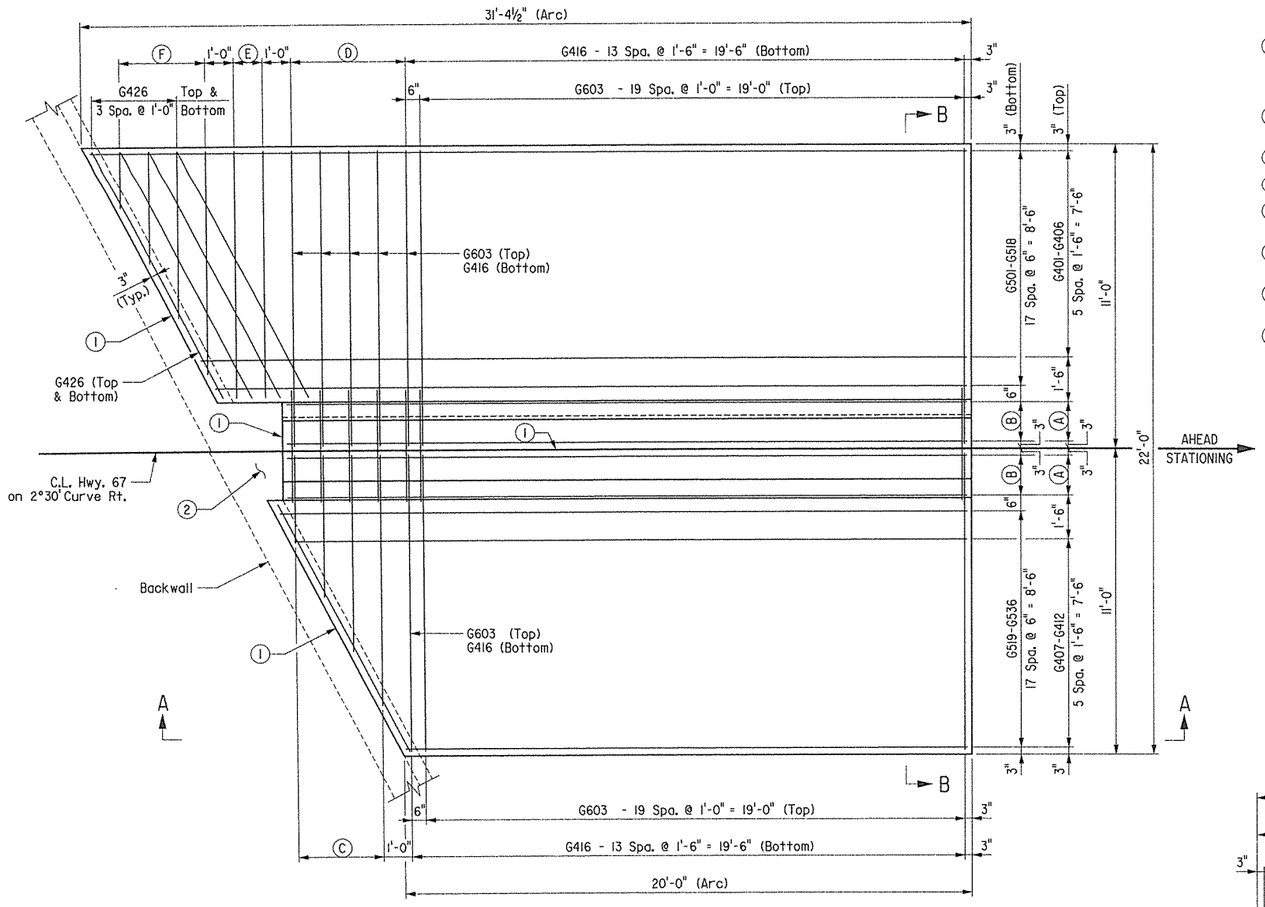

GUTTER 5B PLAN

Scale: ⅜" = 1'-0"

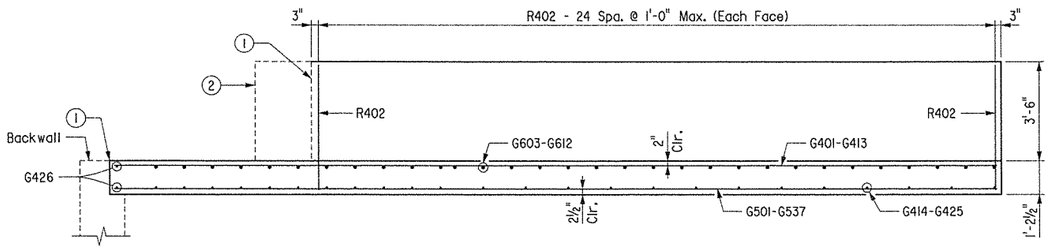

SECTION A-A

Scale: ⅜" = 1'-0"

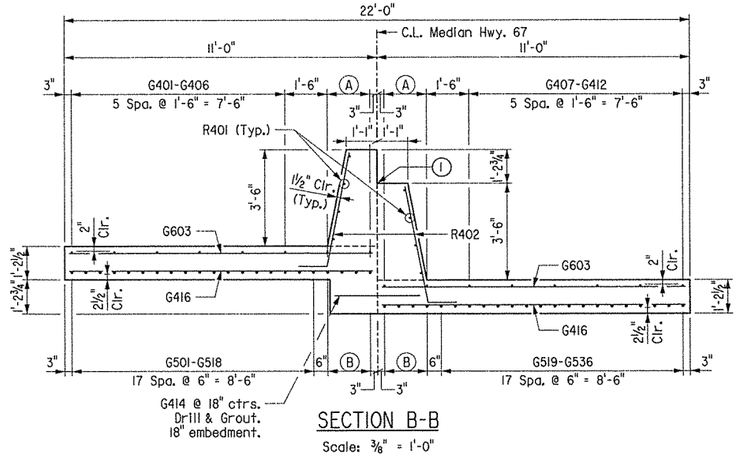

SECTION B-B

Scale: ⅜" = 1'-0"

BAR LIST - ONE TYPE 5B SPECIAL APPROACH GUTTER

Bending Diagrams

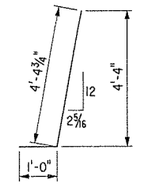

R402

Mark	No. Req'd.	Length	Pin Dia.
G401 to G406	1 Each	30'-10" to 27'-0"	Str.
G407 to G412	1 Each	23'-8" to 19'-9"	Str.
G413	4	23'-11"	Str.
G414	19	3'-0"	Str.
G415	Not used		
G416	32	10'-8"	Str.
G417	1	9'-0"	Str.
G418	1	7'-0"	Str.
G419	1	5'-1"	Str.
G420	1	3'-1"	Str.
G421	2	8'-11"	Str.
G422	1	8'-0"	Str.
G423	1	6'-1"	Str.
G424	1	4'-1"	Str.
G425	1	2'-1"	Str.
G426	10	10'-0"	Str.
G501 to G518	1 Each	30'-10" to 26'-5"	Str.
G519 to G536	1 Each	24'-2" to 19'-9"	Str.
G537	8	23'-11"	Str.
G603	46	10'-8"	Str.
G604	1	9'-0"	Str.
G605	1	7'-0"	Str.
G606	1	5'-1"	Str.
G607	1	3'-1"	Str.
G608	2	8'-11"	Str.
G609	1	8'-0"	Str.
G610	1	6'-1"	Str.
G611	1	4'-1"	Str.
G612	1	2'-1"	Str.
R401	8	23'-11"	Str.
R402	50	5'-4"	2"

QUANTITIES FOR ONE TYPE 5B SPECIAL APPROACH GUTTER

Reinforcing Steel (Lbs.)	Concrete (Cu. Yds.)
2,927	35.33

STATE OF ARKANSAS
REGISTERED PROFESSIONAL ENGINEER
No. 11339
3-24-14
LARRY W. MILLER
BRIDGE ENGINEER

SHEET 2 OF 2
DETAILS OF TYPE SPECIAL 5 APPROACH GUTTERS MAIN STREET

ROUTE 67 SEC. 10

ARKANSAS STATE HIGHWAY COMMISSION

LITTLE ROCK, ARK.

DRAWN BY: JAP DATE: 03-13
CHECKED BY: GS DATE: 03-01-13
DESIGNED BY: LWM DATE: 03-13
FILENAME: b061276m2_g52.dgn
SCALE: As Shown

BRIDGE NO. A&B7283 DRAWING NO. 53683

DATE REVISED	DATE FILMED	DATE REVISED	DATE FILMED	FED. ROAD DIST. NO.	STATE	FED. AID PROJ. NO.	SHEET NO.	TOTAL SHEETS
				6	ARK.			
				JOB NO.		061276	280	438
				(1)		RETAINING WALLS		53684

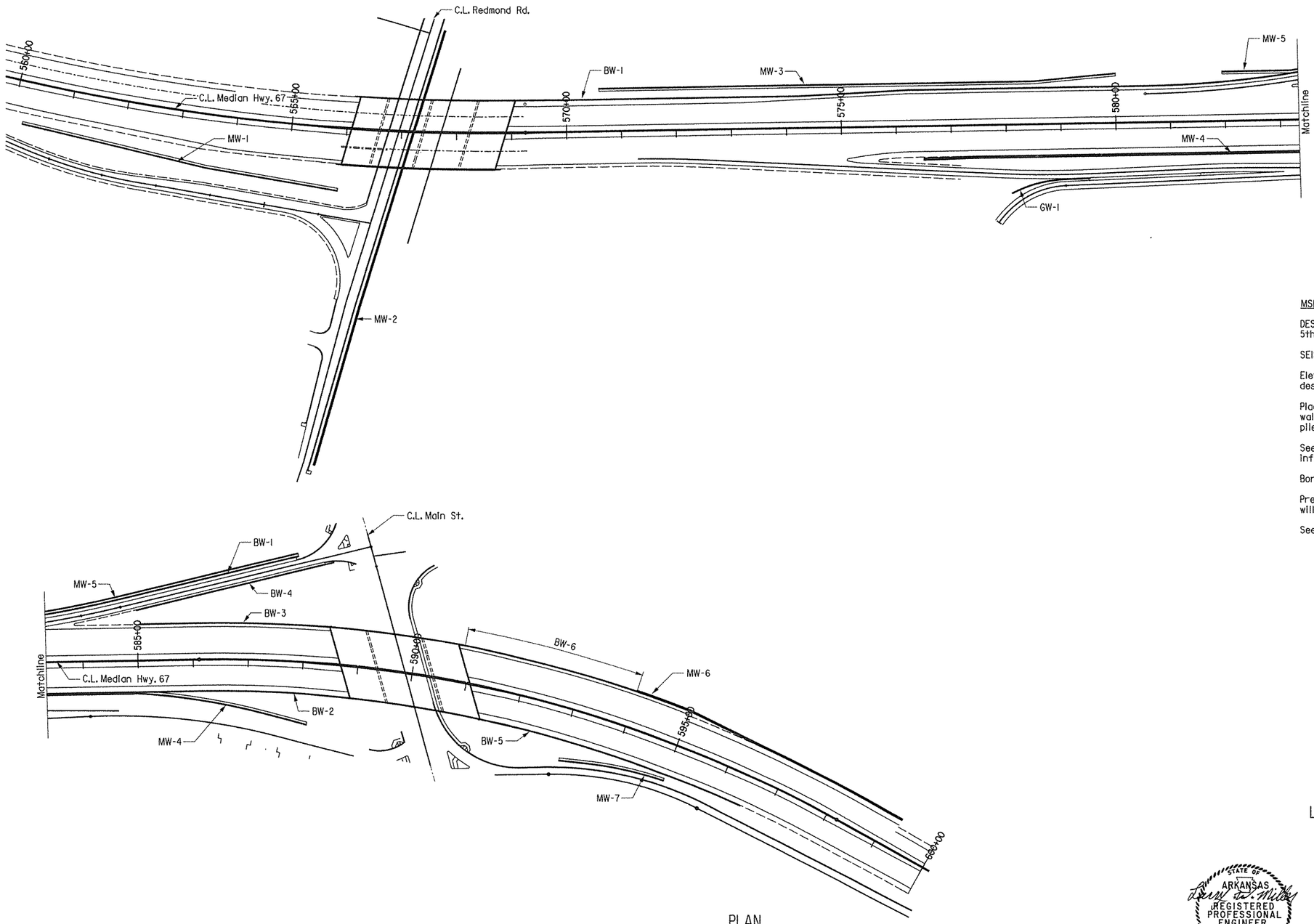

PLAN

BW - Barrier Wall
MW - MSE Wall
GW - Gravity Wall

MSE WALL RETAINING WALL NOTES:

DESIGN SPECIFICATIONS: AASHTO LRFD Bridge Design Specifications (2010, 5th Edition) with interim specifications.

SEISMIC ZONE: 2 SI = 0.099, Fv = 2.4

Elevations are approximate. Wall dimensions may vary depending on wall design selected.

Placement of reinforcing for Mechanically Stabilized Earth (MSE) retaining walls may be affected by end bent construction. See bridge drawings for pile locations and wingwall details.

See Special Provision Job No. 061276 "RETAINING WALLS" for additional information.

Boring logs may be obtained from Programs and Contracts Division.

Preformed joint filler and joint sealer will not be paid for directly but will be considered subsidiary to the item "RETAINING WALLS".

See Dwg. CDP-1 for Ditch Paving Details.

All walls shall have a Fractured Fin Finish.

STATE OF ARKANSAS
REGISTERED PROFESSIONAL ENGINEER
No. 11339
LARRY W. MILLER
8-19-13
BRIDGE ENGINEER

LAYOUT OF BARRIER AND RETAINING WALLS
REDMOND RD. & MAIN ST.
STRS. & APPRS. (JACKSONVILLE) (F)
PULASKI COUNTY

ROUTE 67 SEC. 10

ARKANSAS STATE HIGHWAY COMMISSION

LITTLE ROCK, ARK.

DRAWN BY: LWM DATE: 8-12 FILENAME: b061276w_11.dgn
CHECKED BY: GS DATE: 03-01-13 SCALE: 1" = 100'-0"
DESIGNED BY: LWM DATE: 8-12

BRIDGE NO. DRAWING NO. 53684

DATE REVISED	DATE FILMED	DATE REVISED	DATE FILMED	FED. ROAD DIST. NO.	STATE	FED. AID PROJ. NO.	SHEET NO.	TOTAL SHEETS
5-23-14				6	ARK.			
				JOB NO.		061276	281	438
				RETAINING WALLS				53685

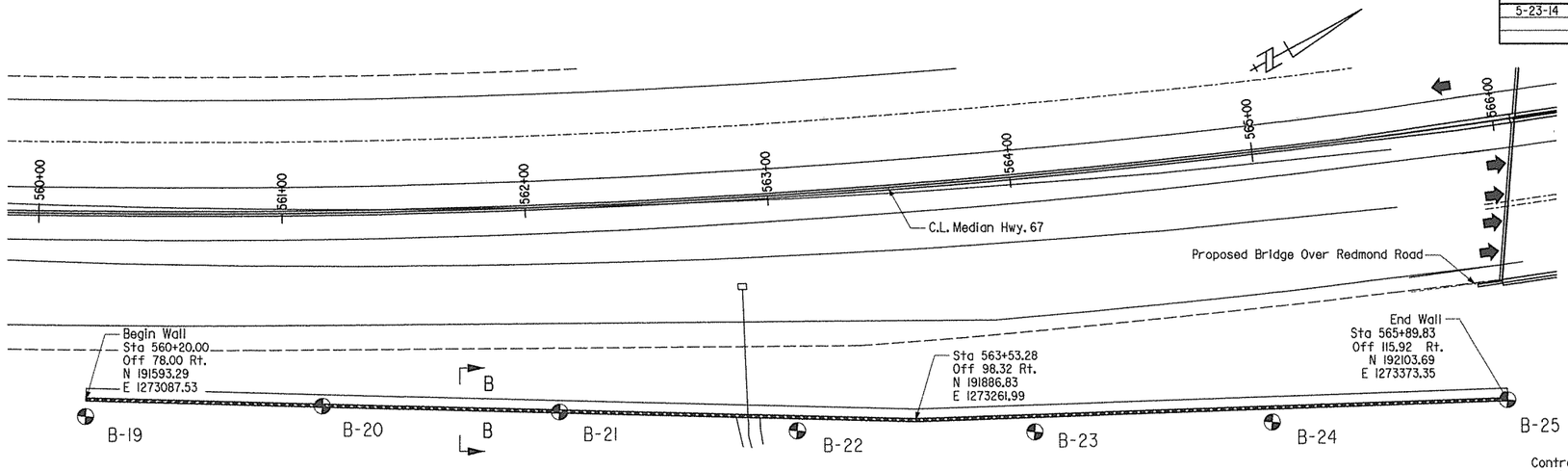

PLAN

Control point stations and offsets in PLAN VIEW are measured to the outside vertical face of retaining wall and are radial to C.L. Median Hwy. 67.

For wall sections and details, see Dwg. No. 53685g.

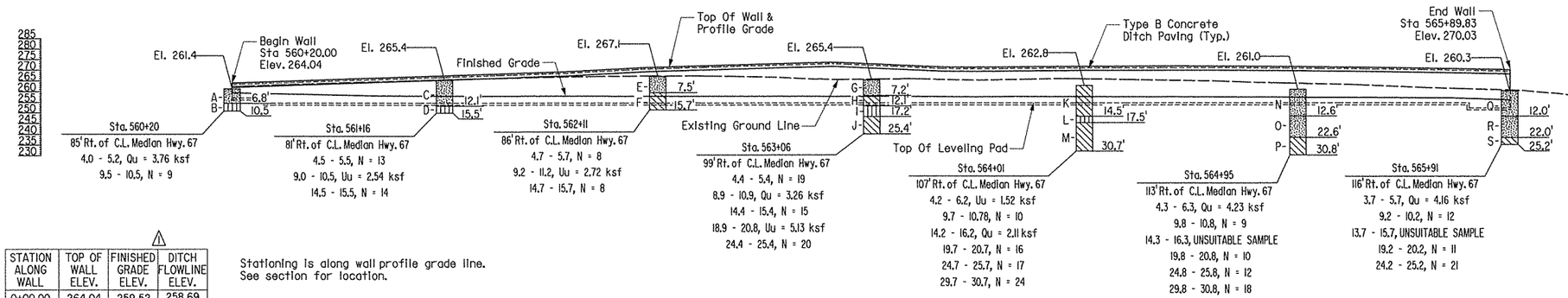

ELEVATION
(Viewed From Outside Face)

⚠

STATION ALONG WALL	TOP OF WALL ELEV.	FINISHED GRADE ELEV.	DITCH FLOWLINE ELEV.
0+00.00	264.04	259.52	258.69
0+25.00	264.89	258.96	257.71
0+50.00	265.76	258.40	257.15
0+75.00	266.60	257.99	256.74
1+00.00	267.45	257.97	256.72
1+25.00	268.30	257.95	256.70
1+50.00	269.14	257.92	256.67
1+75.00	270.47	257.90	256.65
2+00.00	271.60	257.87	256.62
2+25.00	272.35	257.85	256.60
2+50.00	273.06	257.83	256.58
2+75.00	273.75	257.81	256.56
3+00.00	272.59	257.78	256.53
3+25.00	271.43	257.76	256.51
3+50.00	271.42	257.74	256.49
3+75.00	271.65	257.68	256.43
4+00.00	271.80	257.59	256.34
4+25.00	271.85	257.51	256.26
4+50.00	271.81	257.43	256.18
4+75.00	271.68	257.35	256.10
5+00.00	271.46	257.27	256.01
5+25.00	271.15	257.16	255.93
5+50.00	270.75	257.03	255.85
5+75.00	270.26	256.44	255.77
5+85.25	270.03	256.09	255.73

Stationing is along wall profile grade line.
See section for location.

⚠ Added finished ground line and ditch elevations to table. LWM 5-23-14

Boring Legend

A- Brown, Orange & Gray, Medium Dense, Clayey Sand.
B- Brown & Gray, Stiff, Sandy Silt.
C- Brown, Orange & Black, Medium Dense, Clayey Sand.
D- Brown, Stiff, Sandy Silt.
E- Brown, Loose, Clayey Sand.
F- Brown, Gray, Tan & Orange, Medium Stiff, Fat Clay with Sand.
G- Gray & Brown, Medium Dense, Clayey Sand.
H- Gray & Brown, Stiff, Lean Clay with Sand.
I- Gray & Brown, Stiff, Elastic Silt.
J- Gray, Orange & Brown, Very Stiff, Fat Clay.
K- Brown, Gray & Orange, Stiff, Lean Clay with Sand.
L- Gray, Orange & Black, Stiff, Elastic Silt.
M- Black, Very Stiff, Fat Clay.
N- Brown, Gray, Orange & Red, Loose, Clayey Sand.
O- Brown, Tan & Gray, Loose, Silty Sand.
P- Black, Stiff to Very Stiff, Fat Clay.
Q- Brown, Gray, Red, Orange & Tan, Medium Dense, Clayey Sand.
R- Brown, Gray & Tan, Medium Dense, Clayey Sand.
S- Black & Brown, Very Stiff, Fat Clay.

STATE OF ARKANSAS
REGISTERED PROFESSIONAL ENGINEER
No. 11339
LARRY W. MILLER
8-19-13
BRIDGE ENGINEER

LAYOUT OF MSE RETAINING WALL MW-1
REDMOND RD. & MAIN ST.
STRS. & APPRS. (JACKSONVILLE) (F)
PULASKI COUNTY

ROUTE 67 SEC. 10

ARKANSAS STATE HIGHWAY COMMISSION

LITTLE ROCK, ARK.

DRAWN BY: LWM DATE: 8-12 FILENAME: b061276w_12.dgn
CHECKED BY: GS DATE: 03-01-13 SCALE: 1"=30'-0"
DESIGNED BY: LWM DATE: 8-12

BRIDGE NO. DRAWING NO. 53685

DATE REVISED	DATE FILMED	DATE REVISED	DATE FILMED	FED. ROAD DIST. NO.	STATE	FED. AID PROJ. NO.	SHEET NO.	TOTAL SHEETS
5-23-14				6	ARK.			
				JOB NO.		061276	282	438
				①		RETAINING WALLS		53685a

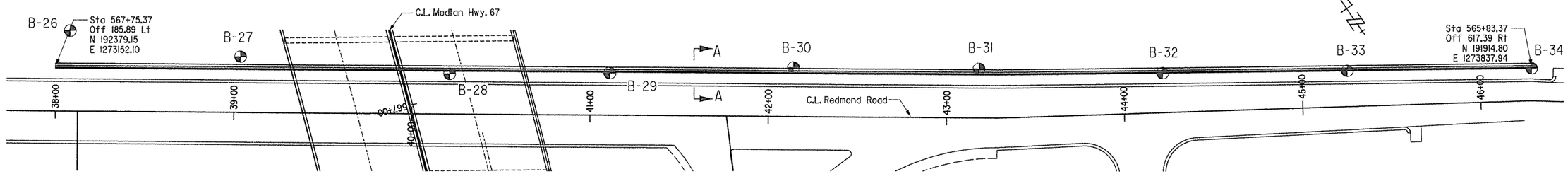

PLAN

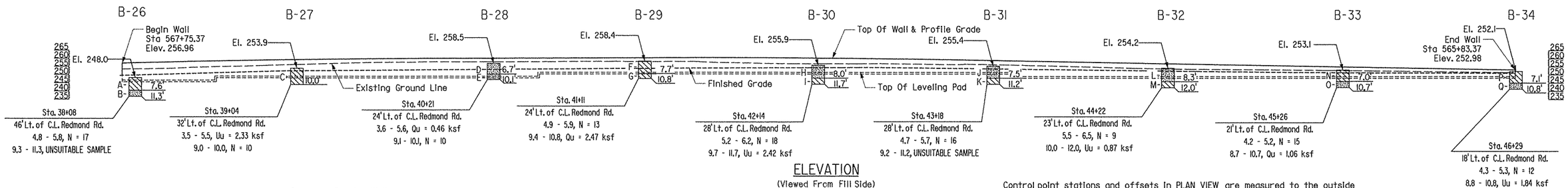

ELEVATION

(Viewed From Fill Side)

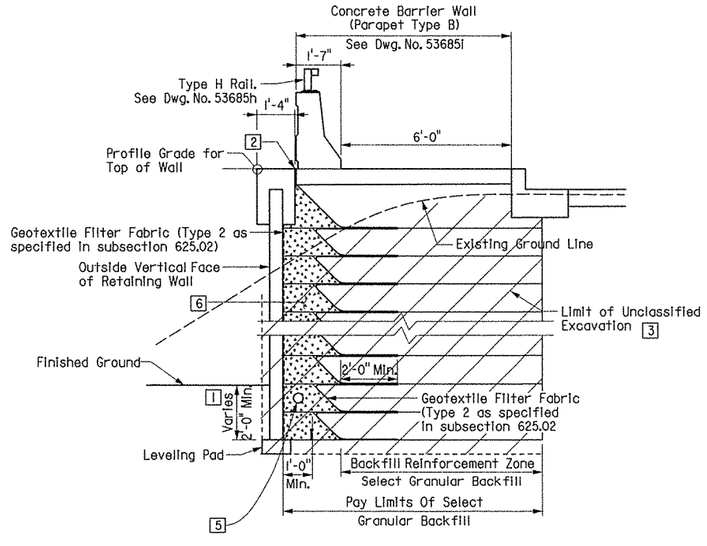

SECTION A-A

3/8" = 1'-0"

Cost of Parapet Type B, including concrete, reinforcing, preformed joints, sealers and Type H rail shall be paid for as "Concrete Barrier Wall (Parapet Type B)".

For MSE notes and concrete barrier wall details, see Dwg. No. 53685g.

Encroachment of excavation into existing pavement will not be allowed. The contractor shall maintain a minimum of two 11'-0" lanes on Redmond Road throughout construction. Any shoring required will not be paid for directly but will be considered subsidiary to various pay items. See SP Job 061276 "Retaining Walls".

⚠

STATION ALONG WALL	TOP OF WALL ELEV.	FINISHED GRADE ELEV.
0+00.00	256.96	249.18
0+25.00	257.62	249.91
0+50.00	258.20	250.65
0+75.00	258.70	251.38
1+00.00	259.12	252.12
1+25.00	259.46	252.32
1+50.00	259.72	252.52
1+75.00	259.90	252.72
2+00.00	260.01	252.92
2+25.00	260.09	253.12
2+50.00	260.17	253.32
2+75.00	260.25	253.52
3+00.00	260.33	253.72
3+25.00	260.41	253.82
3+50.00	260.44	253.93
3+75.00	260.40	254.03
4+00.00	260.29	254.14
4+25.00	260.11	254.24
4+50.00	259.86	254.35
4+75.00	259.54	254.05
5+00.00	259.15	253.75
5+25.00	258.69	253.45
5+50.00	258.21	253.15
5+75.00	257.74	252.85
6+00.00	257.27	252.55
6+25.00	256.80	252.25
6+50.00	256.33	251.95
6+75.00	255.86	251.65
7+00.00	255.39	251.35
7+25.00	254.92	251.25
7+50.00	254.45	251.16
7+75.00	253.98	251.06
8+00.00	253.51	250.97
8+25.00	253.04	250.88
8+28.29	252.98	250.86

Stationing is along wall profile grade line. See section for location.

⚠ Added finished ground line elevations to table. LWM 5-23-14

Control point stations and offsets in PLAN VIEW are measured to the outside vertical face of retaining wall and are radial to C.L. Median Hwy. 67.

Boring Legend

A- Brown & Gray, Very Stiff, Sandy Lean Clay.
B- Gray, Orange & Tan, Dense, Silty Sand.
C- Brown & Gray, Stiff, Sandy Lean Clay.
D- Brown, Loose, Clayey Sand.
E- Brown & Gray, Loose, Silty Sand.
F- Brown & Gray, Stiff, Sandy Lean Clay.
G- Orange, Yellow & Gray, Stiff, Sandy Lean Clay.
H- Brown & Gray, Medium Dense, Clayey Sand.
I- Orange & Tan, Stiff, Sandy Lean Clay.
J- Brown & Gray, Medium Dense, Clayey Sand.
K- Orange & Brown, Stiff, Sandy Lean Clay.
L- Brown & Gray, Loose, Clayey Sand.
M- Orange & Gray, Medium Stiff, Sandy Lean Clay.
N- Brown & Gray, Stiff, Sandy Lean Clay.
O- Orange & Tan, Medium Dense, Silty Sand.
P- Brown, Stiff, Sandy Lean Clay.
Q- Gray, Medium Dense, Silty Sand.

STATE OF ARKANSAS
REGISTERED PROFESSIONAL ENGINEER
No. 13339
LARRY W. MILLER
8-19-13

BRIDGE ENGINEER

LAYOUT OF MSE RETAINING WALL MW-2
REDMOND RD. & MAIN ST.
STRS. & APPRS. (JACKSONVILLE) (F)
PULASKI COUNTY

ROUTE 67 SEC. 10

ARKANSAS STATE HIGHWAY COMMISSION

LITTLE ROCK, ARK.

DRAWN BY: LWM DATE: 8-12
CHECKED BY: GS DATE: 03-01-13
DESIGNED BY: LWM DATE: 8-12

FILENAME: b061276w_13.dgn
SCALE: 1"=30'-0"

BRIDGE NO.

DRAWING NO. 53685a

DATE REVISED	DATE FILMED	DATE REVISED	DATE FILMED	FED. ROAD DIST. NO.	STATE	FED. AID PROJ. NO.	SHEET NO.	TOTAL SHEETS
5-23-14				6	ARK.			
				JOB NO.		061276	283	438
				(1)		RETAINING WALLS		53685b

Control point stations and offsets in PLAN VIEW are measured to the outside vertical face of retaining wall and are radial to C.L. Median Hwy. 67.

For wall sections and details, see Dwg. No. 53685g.

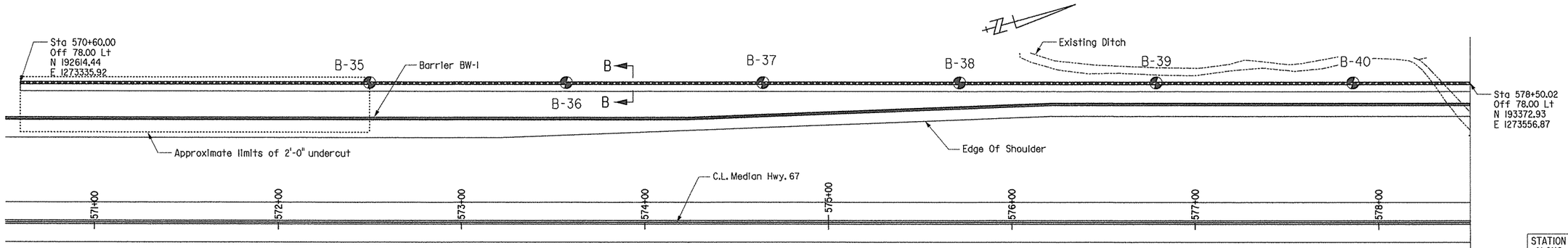

PLAN

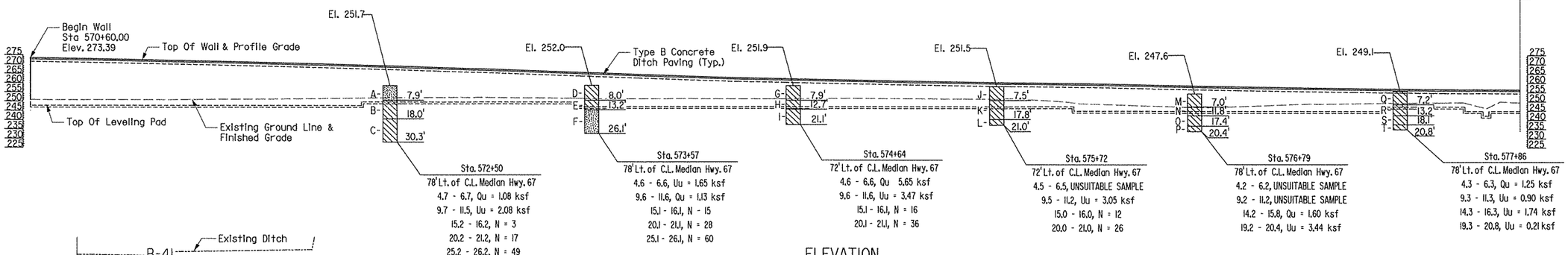

ELEVATION
(Viewed From Fill Side)

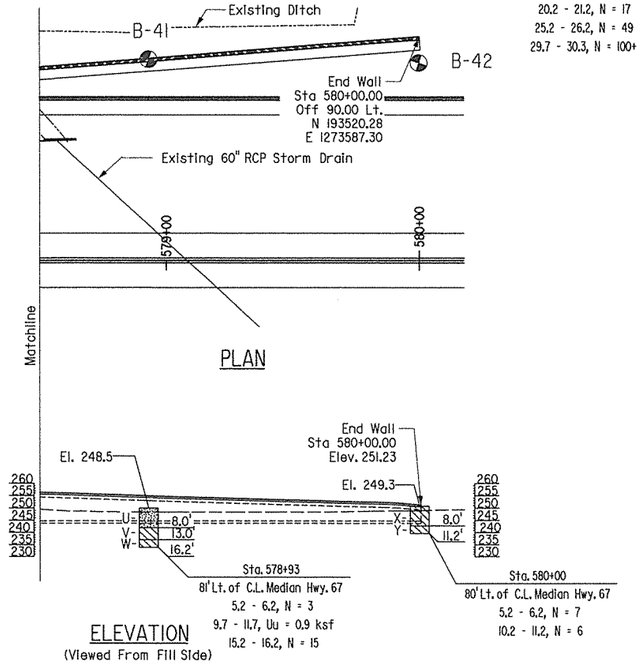

PLAN

ELEVATION
(Viewed From Fill Side)

Boring Legend

A- Gray, Orange & Tan, Medium Dense, Clayey Sand.
B- Tan, White, Orange & Gray, Soft, Sandy Lean Clay.
C- Gray & Brown, Medium Dense to Very Dense, Lean Clay with Sand.
D- Brown & Gray, Stiff, Sandy Lean Clay.
E- Gray & Brown, Stiff, Sandy Silty Clay.
F- Gray & Tan, Stiff to Hard, Lean Clay with Sand.
G- Brown & Gray, Stiff, Sandy Lean Clay.
H- Brown & Gray, Stiff, Sandy Lean Clay.
I- Gray, Very Stiff to Hard, Lean Clay with Sand.
J- Brown, Stiff, Sandy Silty Clay.
K- Brown, Gray & Orange, Stiff, Sandy Silty Clay.
L- Gray, Very Stiff, Lean Clay with Sand.
M- Brown & Gray, Stiff, Sandy Lean Clay.
N- Gray & Brown, Stiff, Sandy Lean Clay.
O- Brown & Orange, Very Stiff, Fat Clay with Sand.
P- Gray, Very Stiff, Lean Clay with Sand.
Q- Brown, Gray & Tan, Stiff, Sandy Lean Clay.
R- Brown & Gray, Stiff, Sandy Silty Clay.
S- Brown & Gray, Stiff, Sandy Lean Clay.
T- Brown & Gray, Very Stiff, Fat Clay with Sand.
U- Brown, Very Loose, Clayey Sand.
V- Gray & Tan, Medium Stiff, Sandy Lean Clay.
W- Black, Stiff, Fat Clay with Sand.
X- Brown & Gray, Medium Stiff, Sandy Lean Clay.
Y- Brown & Gray, Medium Stiff, Sandy Lean Clay.

⚠ Added finished ground line and ditch flowline elevations to table. LWM 5-23-14

⚠

STATION ALONG WALL	TOP OF WALL ELEV.	FINISHED GRADE ELEV.	DITCH FLOWLINE ELEV.
0+00.00	273.39	250.84	--
0+25.00	272.97	250.73	--
0+50.00	272.50	250.79	--
0+75.00	271.99	250.82	--
1+00.00	271.44	251.01	--
1+25.00	270.85	251.14	--
1+50.00	270.23	251.35	--
1+75.00	269.56	251.69	--
2+00.00	268.81	251.99	--
2+25.00	268.01	252.12	--
2+50.00	267.17	251.99	--
2+75.00	266.25	251.80	--
3+00.00	265.36	251.51	--
3+25.00	264.45	251.42	--
3+50.00	263.55	251.51	--
3+75.00	262.80	251.46	--
4+00.00	262.23	251.48	--
4+25.00	261.70	251.64	--
4+50.00	261.22	251.60	--
4+75.00	260.78	251.49	--
5+00.00	260.39	251.33	--
5+25.00	260.04	251.26	--
5+50.00	259.74	249.66	247.80
5+75.00	259.32	248.24	246.69
6+00.00	258.79	247.46	245.59
6+25.00	258.31	246.82	244.48
6+50.00	257.87	247.72	244.13
6+75.00	257.48	248.67	244.91
7+00.00	257.13	248.94	245.44
7+25.00	256.83	249.28	245.60
7+50.00	256.57	249.40	245.62
7+75.00	256.46	247.78	245.76
8+00.00	255.97	248.76	246.37
8+25.00	255.13	248.31	246.97
8+50.00	254.33	248.26	247.31
8+75.00	253.58	248.28	247.51
9+00.00	252.87	248.30	247.71
9+25.00	252.20	248.68	247.91
9+40.48	251.23	248.94	248.00

Stationing is along wall profile grade line. See section for location.

STATE OF ARKANSAS
Larry W. Miller
REGISTERED PROFESSIONAL ENGINEER
No. 11339
8-19-13
LARRY W. MILLER
BRIDGE ENGINEER

LAYOUT OF MSE RETAINING WALL MW-3
REDMOND RD. & MAIN ST.
STRS. & APPRS. (JACKSONVILLE) (F)
PULASKI COUNTY

ROUTE 67 SEC. 10

ARKANSAS STATE HIGHWAY COMMISSION

LITTLE ROCK, ARK.

DRAWN BY: LWM DATE: 8-12
CHECKED BY: GS DATE: 03-01-13
DESIGNED BY: LWM DATE: 8-12

FILENAME: b061276w_14.dgn
SCALE: 1"=30'-0"

BRIDGE NO.

DRAWING NO. 53685b

DATE REVISED	DATE FILMED	DATE REVISED	DATE FILMED	FED. ROAD DIST. NO.	STATE	FED. AID PROJ. NO.	SHEET NO.	TOTAL SHEETS
5-21-14				6	ARK.			
				JOB NO.		061276	284	438
				RETAINING WALLS				53685c

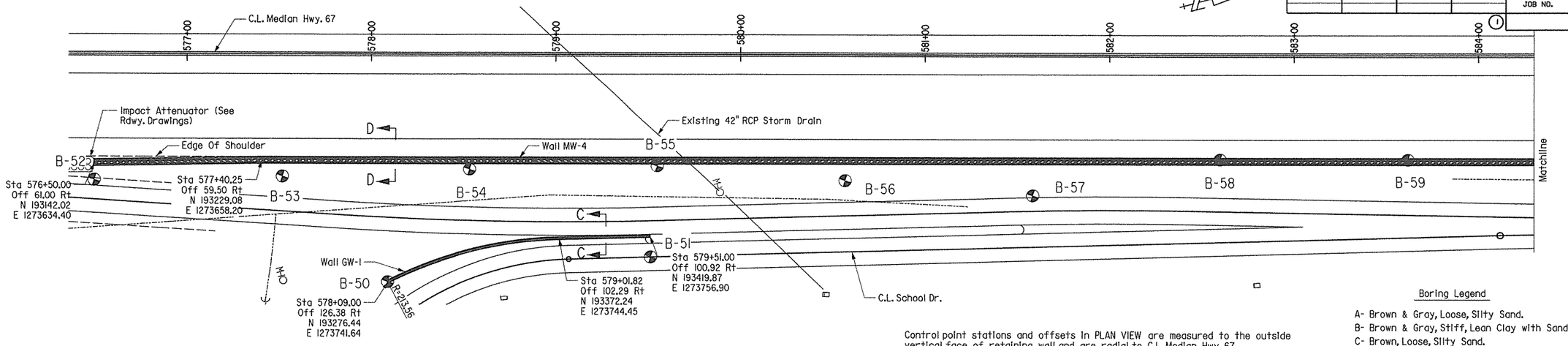

Control point stations and offsets in PLAN VIEW are measured to the outside vertical face of retaining wall and are radial to C.L. Median Hwy. 67.

For MSE wall sections and details, see Dwg. No. 53685g.

Boring Legend

A- Brown & Gray, Loose, Silty Sand.
B- Brown & Gray, Stiff, Lean Clay with Sand.
C- Brown, Loose, Silty Sand.
D- Tan & Brown, Stiff, Lean Clay with Sand.

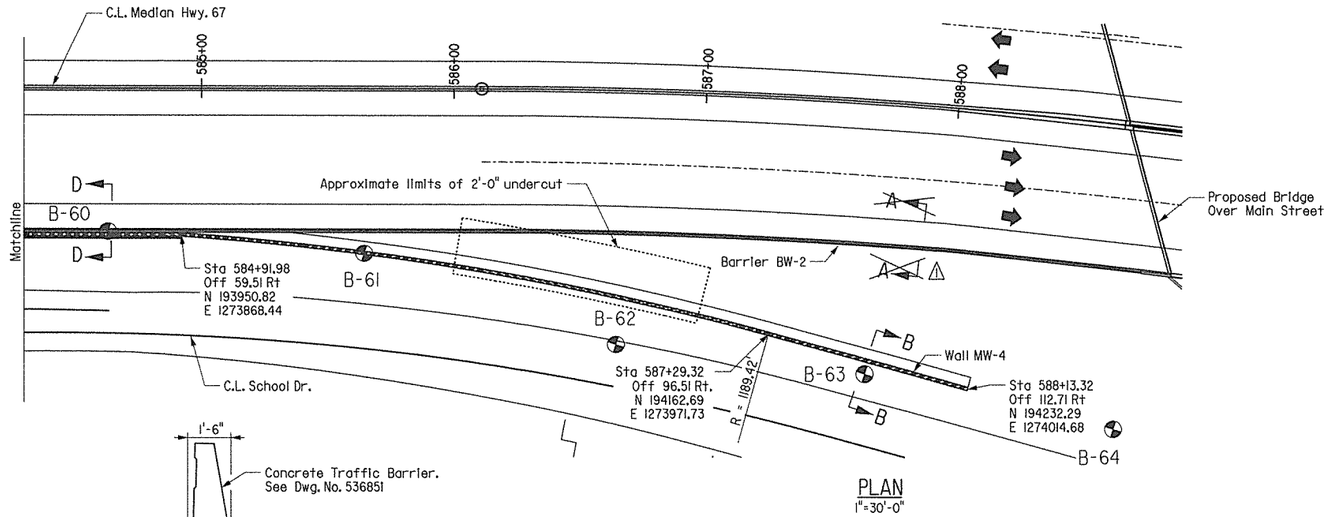

PLAN
1"=30'-0"

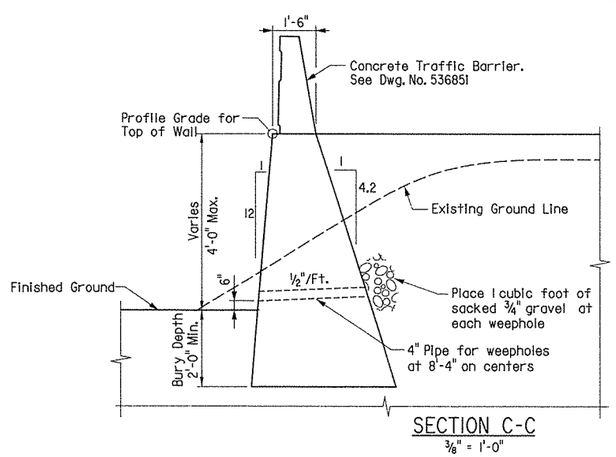

SECTION C-C
⅜" = 1'-0"

For joint details pertaining to gravity wall construction, see Dwg. No. 53685h.

GW-1 ⚠

STATION ALONG WALL	TOP OF WALL ELEV.	FINISHED GRADE ELEV.
0+00.00	256.54	252.61
0+25.00	256.36	253.91
0+50.00	256.05	254.74
0+75.00	255.77	254.98
1+00.00	255.52	254.78
1+25.00	255.31	254.48
1+45.60	255.14	254.29

Stationing is along wall profile grade line. See section for location.

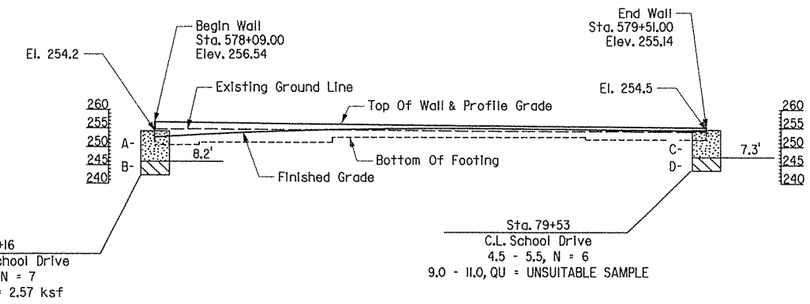

ELEVATION OF WALL GW-1
1"=20'-0"
(Viewed From Outside Face)

Contractor has the option to propose an MSE wall design for Wall GW-1. Details of MSE design shall conform to those shown on Dwg. No. 53685g.

For elevation of Wall MW-4, see Dwg. No. 53685d.

GRAVITY RETAINING WALL NOTES

Concrete - Class B f'c=3000 psi or Class S f'c= 3500 psi

Weephole Pipe - AASHTO M304 (PVC Wall Drain Pipe) or AASHTO M252 (Corrugated HDPE-Type S)

Prefabricated Drains - Composite geotextile fabric and polymer plastic drainage core from AHTD Qualified Products List, Item 801.02, PREFABRICATED DRAINAGE SYSTEM. Glue drain to fill face of wall (fabric facing backfill) with adhesive recommended by manufacturer for compatibility with type of polymer plastic used for drainage core.

Payment for Gravity Retaining Wall will be made under Item 802, Class B Concrete-Bridge, and includes cost of contraction and expansion joints, weephole pipes, traffic barrier, Type H Rail, prefabricated drains and structural excavation.

⚠ Deleted Section A-A callout. Added finished grade elevations to table. LWM 5-21-14

STATE OF ARKANSAS
Larry W. Miller
REGISTERED PROFESSIONAL ENGINEER
No. 11339
8-19-13
LARRY W. MILLER
BRIDGE ENGINEER

LAYOUT OF RETAINING WALLS GW-1 & MW-4 REDMOND RD. & MAIN ST. STRS. & APPRS. (JACKSONVILLE) (F) PULASKI COUNTY

ROUTE 67 SEC. 10

ARKANSAS STATE HIGHWAY COMMISSION

LITTLE ROCK, ARK.

DRAWN BY: LWM DATE: 8-12 FILENAME: b061276w_15.dgn
CHECKED BY: GS DATE: 03-01-13 SCALE: As Shown
DESIGNED BY: LWM DATE: 8-12
BRIDGE NO. DRAWING NO. 53685c

Control point stations and offsets in PLAN VIEW are measured to the outside vertical face of retaining wall and are radial to C.L. Median Hwy. 67.

For wall details, see Dwg. No. 53685g.

DATE REVISED	DATE FILMED	DATE REVISED	DATE FILMED	FED. ROAD DIST. NO.	STATE	FED. AID PROJ. NO.	SHEET NO.	TOTAL SHEETS
5-23-14				6	ARK.			
				JOB NO.		061276	285	438
				①		RETAINING WALLS		53685d

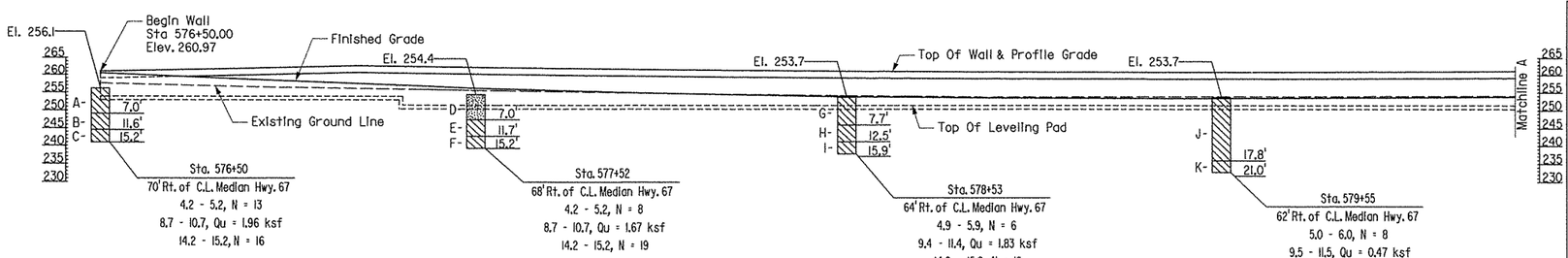

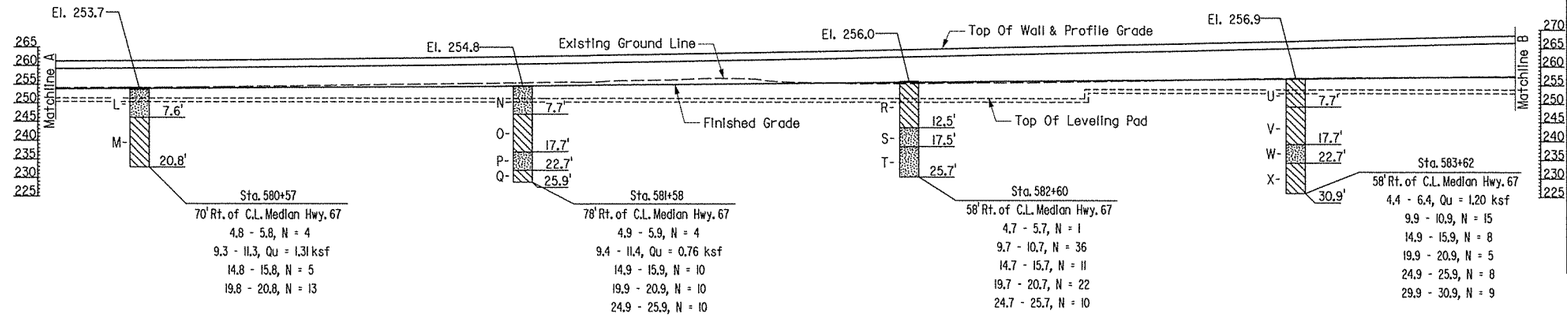

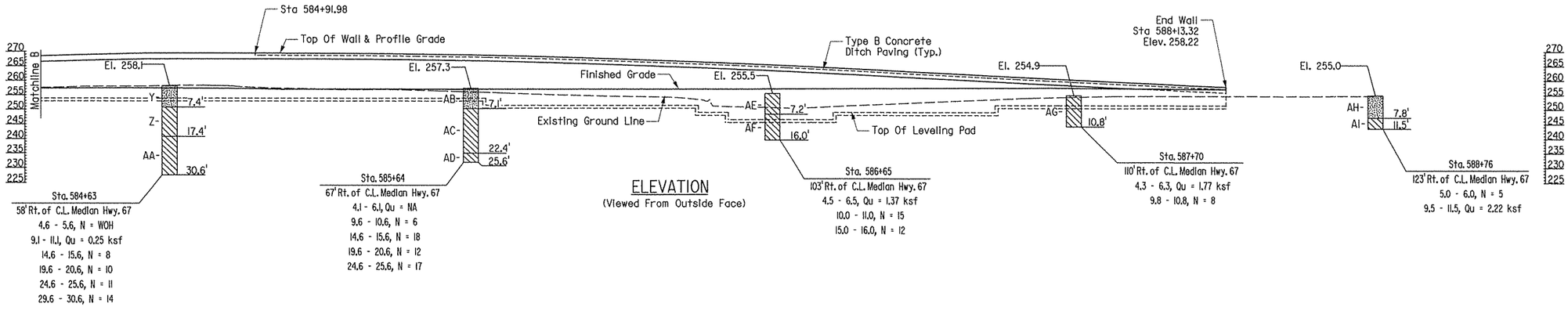

ELEVATION
(Viewed From Outside Face)

Boring Legend

A- Brown, Stiff, Sandy Silty Clay.
B- Red & Gray, Stiff, Lean Clay with Sand.
C- Gray & Brown, Very Stiff, Sandy Lean Clay.
D- Brown, Loose, Silty Sand.
E- Brown, Orange & Gray, Stiff, Lean Clay with Sand.
F- Black & Brown, Very Stiff, Sandy Lean Clay.
G- Brown, Medium Stiff, Sandy Silty Clay.
H- Brown, Orange & Gray, Medium Stiff, Lean Clay with Sand.
I- Black & Brown, Stiff, Sandy Lean Clay.
J- Brown & Gray, Medium Stiff to Very Stiff, Sandy Silty Clay.
K- Black & Brown, Very Stiff, Sandy Lean Clay.
L- Brown, Very Loose, Silty Sand.
M- Gray, Brown & Black, Medium Stiff to Stiff, Sandy Silty Clay.
N- Brown, Very Loose, Silty Sand.
O- Gray, Tan & Brown, Stiff, Sandy Silty Clay.
P- Brown, Loose, Silty Sand.
Q- Brown, Stiff, Sandy Lean Clay.
R- Brown & Gray, Very Soft to Hard, Lean Clay with Sand.
S- Brown, Medium Dense, Silty Sand.
T- Brown, Loose to Medium Dense, Silty Sand.
U- Orange & Brown, Stiff, Sandy Lean Clay.
V- Brown & Gray, Medium Stiff to Stiff, Sandy Silty Clay.
W- Gray & Brown, Loose, Silty Sand.
X- Gray & Brown, Medium Stiff to Stiff, Sandy Lean Clay.
Y- Black & Brown, Very Loose, Clayey Sand.
Z- Blue & Gray, Medium Stiff, Sandy Silty Clay.
AA- Brown, Stiff, Sandy Lean Clay.
AB- Tan, Medium Dense, Clayey Sand.
AC- Gray & Brown, Medium Stiff to Very Stiff, Lean Clay with Sand.
AD- Brown, Very Stiff, Sandy Silty Clay.
AE- Orange, Gray & Black, Medium Stiff, Lean Clay with Sand.
AF- Brown & Gray, Stiff, Sandy Silty Clay.
AG- Brown & Gray, Medium Stiff, Sandy Silty Clay.
AH- Brown & Black, Loose, Clayey Sand.
AI- Gray & Brown, Medium Stiff, Sandy Silty Clay.

Stationing is along wall profile grade line. See section for location.

STATION ALONG WALL	TOP OF WALL ELEV.	FINISHED GRADE ELEV.	DITCH FLOWLINE ELEV.	EXISTING GROUND ELEV.
0+00.00	260.97	260.45	259.62	257.53
0+25.00	261.53	259.35	258.51	256.92
0+50.00	262.12	258.25	257.41	256.34
0+75.00	262.57	257.25	256.40	255.96
1+00.00	262.20	256.23	255.39	255.56
1+25.00	261.88	255.52	254.67	255.16
1+50.00	261.60	254.81	253.96	254.76
1+75.00	261.37	254.34	253.49	254.47
2+00.00	261.18	253.89	253.04	254.19
2+25.00	261.04	253.67	252.82	253.93
2+50.00	260.95	253.47	252.62	253.80
2+75.00	260.89	253.43	252.58	253.84
3+00.00	260.88	253.40	252.55	253.89
3+25.00	260.92	253.49	252.64	253.93
3+50.00	261.00	253.59	252.74	253.99
3+75.00	261.13	253.76	252.91	254.06
4+00.00	261.30	253.93	253.07	254.20
4+25.00	261.52	254.09	253.24	254.42
4+50.00	261.78	254.26	253.41	254.42
4+75.00	262.08	254.42	253.58	255.08
5+00.00	262.43	254.59	253.75	255.42
5+25.00	262.83	254.90	254.06	255.72
5+50.00	263.27	255.10	254.25	256.40
5+75.00	263.75	255.36	254.51	255.90
6+00.00	264.28	255.62	254.77	255.30
6+25.00	264.85	255.87	255.03	255.48
6+50.00	265.45	256.12	255.28	255.74
6+75.00	266.01	256.37	255.54	256.17
7+00.00	266.61	256.61	255.80	256.76
7+25.00	267.26	256.88	256.05	257.03
7+50.00	267.93	257.14	256.29	257.23
7+75.00	268.60	257.28	256.43	257.63
8+00.00	269.26	257.42	256.57	258.02
8+25.00	269.39	257.25	256.17	258.29
8+50.00	269.38	256.94	255.78	257.32
8+75.00	269.28	256.99	255.79	256.80
9+00.00	269.02	256.95	255.83	256.47
9+25.00	268.56	256.98	255.88	255.67
9+50.00	267.88	256.99	255.92	254.87
9+75.00	267.02	257.01	255.96	254.36
10+00.00	266.03	257.02	256.01	250.98
10+25.00	264.91	257.09	256.09	250.36
10+50.00	263.68	257.20	256.19	251.59
10+75.00	262.37	257.31	256.29	252.71
11+00.00	261.09	257.41	256.39	253.84
11+25.00	259.86	257.32	256.49	254.44
11+50.00	258.68	257.13	256.60	254.66
11+59.92	258.22	257.05	256.64	254.65

⚠ Added finished ground, existing ground and ditch elevations to table. LWM 5-23-14

STATE OF ARKANSAS
REGISTERED PROFESSIONAL ENGINEER
No. 11539
LARRY W. MILLER
8-19-13
BRIDGE ENGINEER

ELEVATION OF MSE RETAINING WALL MW-4
REDMOND RD. & MAIN ST.
STRS. & APPRS. (JACKSONVILLE) (F)
PULASKI COUNTY

ROUTE 67 SEC. 10

ARKANSAS STATE HIGHWAY COMMISSION

LITTLE ROCK, ARK.

DRAWN BY: LWM DATE: 8-12 FILENAME: b061276w_16.dgn
CHECKED BY: GS DATE: 03-01-13 SCALE: 1"=20'-0"
DESIGNED BY: LWM DATE: 8-12

BRIDGE NO. DRAWING NO. 53685d

DATE REVISED	DATE FILMED	DATE REVISED	DATE FILMED	FED. ROAD DIST. NO.	STATE	FED. AID PROJ. NO.	SHEET NO.	TOTAL SHEETS
5-23-14				6	ARK.			
				JOB NO.		061276	286	438
				①		RETAINING WALLS		53685e

STATION ALONG WALL	TOP OF WALL ELEV.	FINISHED GRADE ELEV.	DITCH FLOWLINE ELEV.
0+00.00	255.42	250.98	248.65
0+14.52	256.01	251.33	248.71
0+39.52	257.14	251.75	248.81
0+64.52	258.40	252.32	248.92
0+89.52	259.78	253.10	249.03
1+14.52	261.41	253.57	249.08
1+39.52	263.12	253.73	249.37
1+64.52	264.21	253.53	249.67
1+89.52	264.80	253.97	249.74
2+14.52	265.30	254.27	250.12
2+39.52	265.68	254.52	250.22
2+64.52	265.92	254.77	250.27
2+89.52	266.04	254.90	250.88
3+14.52	266.01	255.02	250.89
3+39.52	265.84	255.12	251.08
3+64.52	265.53	255.22	251.30
3+89.52	265.08	255.32	251.49
4+14.52	264.49	255.45	251.69
4+39.52	263.77	255.65	251.97
4+64.52	262.92	255.86	252.24
4+89.52	262.07	256.09	252.51
5+14.52	261.29	256.01	252.77
5+39.52	260.58	255.74	252.88
5+64.52	259.96	255.58	252.99
5+89.52	259.43	255.63	253.10
6+08.99	259.08	255.64	253.18

Stationing is along wall profile grade line.
See section for location.

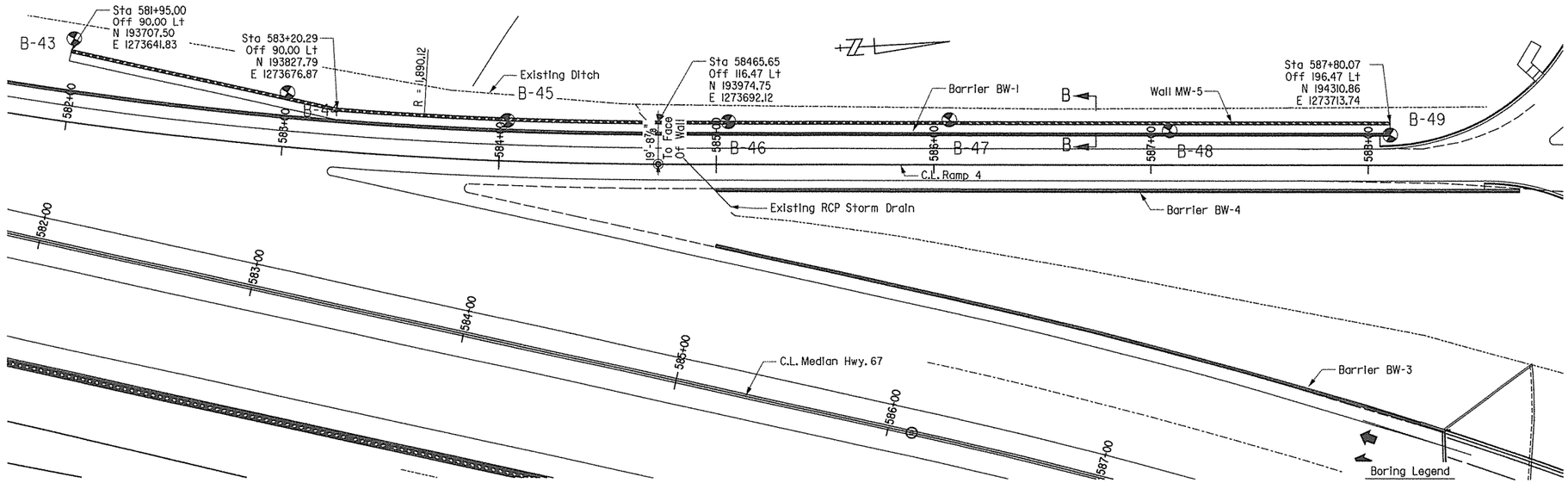

Control point stations and offsets in PLAN VIEW are measured to the outside vertical face of retaining wall and are radial to C.L. Median Hwy. 67.

For wall sections and details, see Dwg. No. 53685g.

PLAN

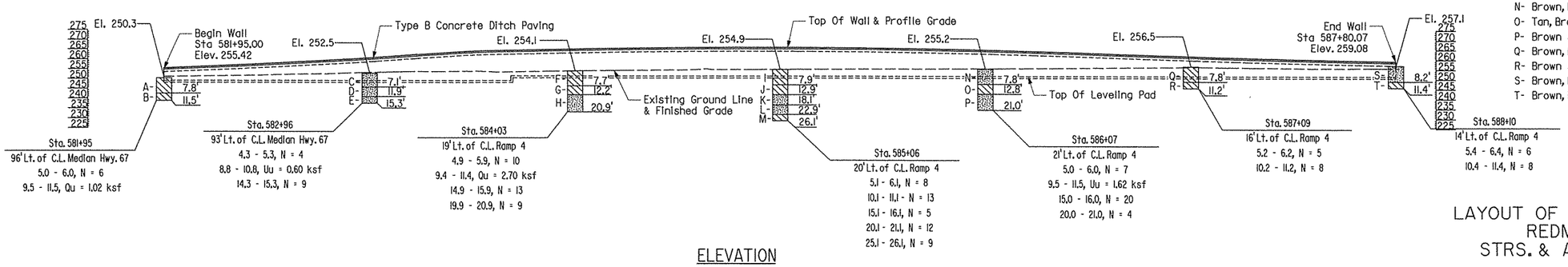

ELEVATION
(Viewed From Fill Side)

⚠ Added finished ground line and ditch elevations to table. LWM 5-23-14

STATE OF ARKANSAS
REGISTERED PROFESSIONAL ENGINEER
No. 13339
8-19-13
LARRY W. MILLER
BRIDGE ENGINEER

LAYOUT OF MSE RETAINING WALL MW-5
REDMOND RD. & MAIN ST.
STRS. & APPRS. (JACKSONVILLE) (F)
PULASKI COUNTY

ROUTE 67 SEC. 10

ARKANSAS STATE HIGHWAY COMMISSION

LITTLE ROCK, ARK.

DRAWN BY: LWM DATE: 8-12
CHECKED BY: GS DATE: 03-01-13
DESIGNED BY: LWM DATE: 8-12

FILENAME: b061276w_17.dgn
SCALE: 1"=30'-0"

BRIDGE NO.

DRAWING NO. 53685e

DATE REVISED	DATE FILMED	DATE REVISED	DATE FILMED	FED. ROAD DIST. NO.	STATE	FED. AID PROJ. NO.	SHEET NO.	TOTAL SHEETS
5-21-14				6	ARK.			
				JOB NO.		061276	287	438
				RETAINING WALLS				53685f

Boring Legend

A- Brown, Orange & Gray, Stiff, Sandy Lean Clay.
B- Gray & Brown, Stiff, Sandy Lean Clay.
C- Brown, Medium Stiff, Sandy Lean Clay.
D- Brown & Gray, Very Stiff, Sandy Lean Clay.
E- Brown, Stiff, Sandy Lean Clay.
F- Black & Brown, Very Stiff to Very Hard, Elastic Silt with Sand.
G- Orange, Gray, Tan & Brown, Very Stiff, Sandy Lean Clay.
H- Brown & Black, Medium Dense to Dense, Elastic Silt with Sand.
I- Brown & Red, Stiff, Sandy Lean Clay.
J- Brown, White, Black & Gray, Very Stiff to Very Hard, Elastic Silt with Sand.
K- Brown, Tan & Gray, Medium Stiff, Sandy Lean Clay.
L- Black & Brown, Stiff to Very Stiff, Elastic Silt with Sand.
M- Red, Tan, White & Brown, Medium Stiff to Stiff, Sandy Lean Clay.
N- Brown, Stiff, Sandy Lean Clay.
O- Brown, Tan & Gray, Medium Stiff, Sandy Lean Clay.
P- Limestone Bed: Gray, Off White, Slightly Weathered.
Q- Shale: Black to Dk. Gray, Moderately to Severely Weathered.

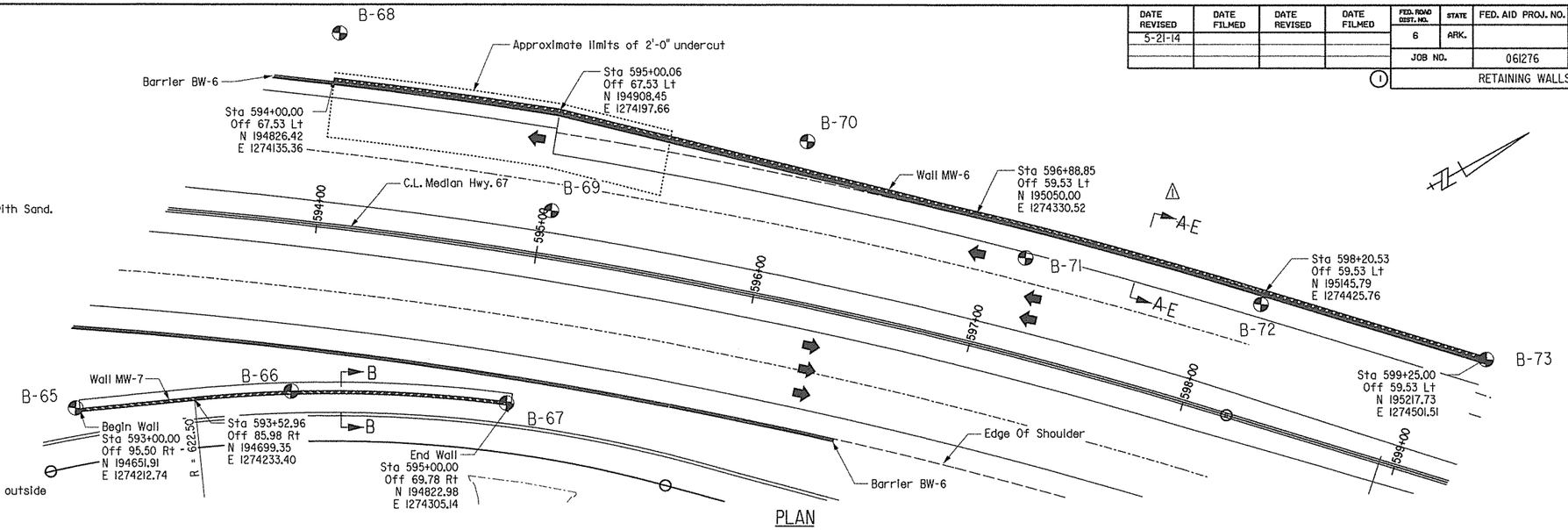

PLAN
1"=30'-0"

Control point stations and offsets in PLAN VIEW are measured to the outside vertical face of retaining wall and are radial to C.L. Median Hwy. 67.

For wall sections and details, see Dwg. No. 53685g.

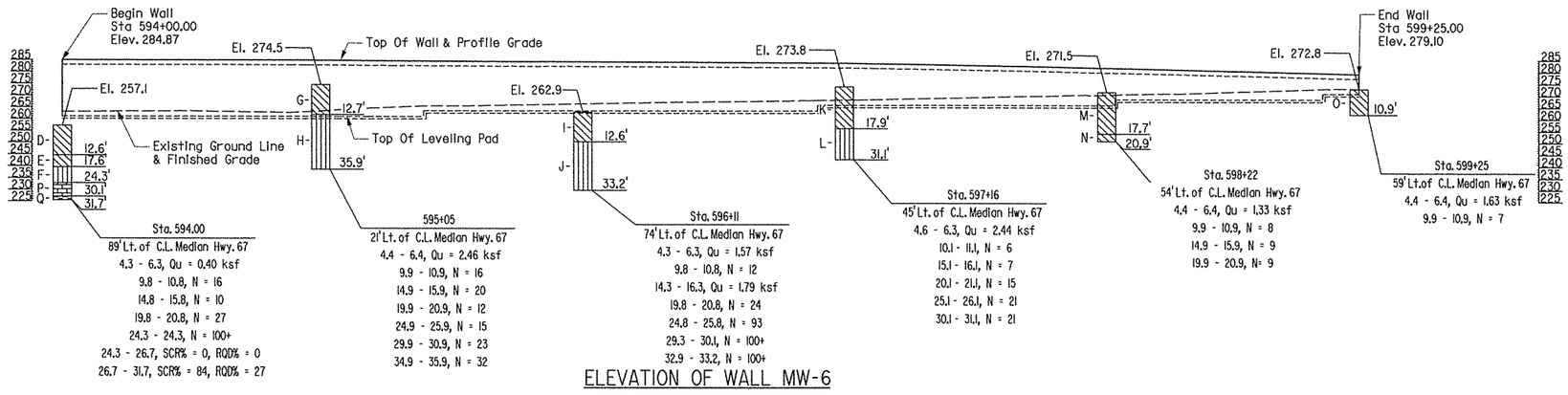

ELEVATION OF WALL MW-6

(Viewed From Fill Side)
1"=30'-0"

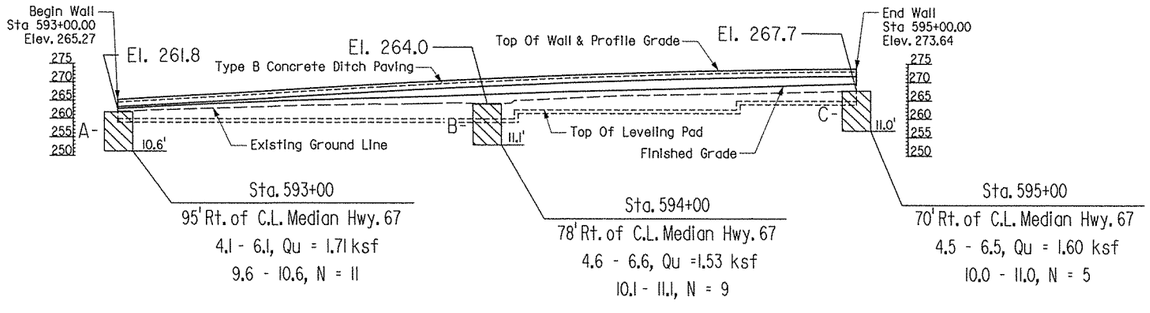

ELEVATION OF WALL MW-7

(Viewed From Outside Face)
1"=20'-0"

MW-6 ⚠

STATION ALONG WALL	TOP OF WALL ELEV.	FINISHED GRADE ELEV.
0+00.00	284.87	262.98
0+25.00	284.84	263.13
0+50.00	284.82	263.22
0+75.00	284.80	262.85
1+00.00	284.77	262.86
1+25.00	284.61	264.39
1+50.00	284.47	265.44
1+75.00	284.35	265.65
2+00.00	284.25	266.11
2+25.00	284.15	266.55
2+50.00	284.05	267.01
2+75.00	283.95	267.31
3+00.00	283.82	267.65
3+25.00	283.66	268.04
3+50.00	283.24	268.56
3+75.00	282.79	269.07
4+00.00	282.31	269.67
4+25.00	281.80	270.10
4+50.00	281.25	270.70
4+75.00	280.67	271.27
5+00.00	280.05	272.05
5+25.00	279.40	272.92
5+36.43	279.10	273.00

MW-7 ⚠

STATION ALONG WALL	TOP OF WALL ELEV.	FINISHED GRADE ELEV.	EXISTING GROUND ELEV.
0+00.00	265.27	263.80	261.95
0+25.00	266.73	264.62	262.83
0+50.00	268.27	265.44	263.63
0+75.00	269.77	266.26	263.99
1+00.00	271.03	267.07	264.22
1+25.00	272.05	267.82	265.93
1+50.00	272.83	268.58	266.61
1+75.00	273.38	269.60	267.13
1+95.00	273.64	271.50	267.69

Stationing is along wall profile grade line.
See section for location.

⚠ Revised Section A-A callout to E-E. Added finished grade and existing ground elevations to table. LWM 5-21-14

STATE OF ARKANSAS
LARRY W. MILLER
REGISTERED PROFESSIONAL ENGINEER
No. 11339
8-19-13
BRIDGE ENGINEER

LAYOUT OF MSE RETAINING WALLS MW-6 & MW-7 REDMOND RD. & MAIN ST. STRS. & APPRS. (JACKSONVILLE) (F) PULASKI COUNTY

ROUTE 67 SEC. 10

ARKANSAS STATE HIGHWAY COMMISSION

LITTLE ROCK, ARK.

DRAWN BY: LWM DATE: 8-12
CHECKED BY: GS DATE: 03-01-13
DESIGNED BY: LWM DATE: 8-12
FILENAME: b061276w_18.dgn
SCALE: As Shown

BRIDGE NO.

DRAWING NO. 53685f

DATE REVISED	DATE FILMED	DATE REVISED	DATE FILMED	FED. ROAD DIST. NO.	STATE	FED. AID PROJ. NO.	SHEET NO.	TOTAL SHEETS
5-21-14				6	ARK.			
				JOB NO.		061276	288	438
				(1)		RETAINING WALLS		53685g

Cost of Parapet Type C, including concrete, reinforcing, preformed joints and sealers shall be paid for as "Concrete Barrier Wall (Parapet Type C)".

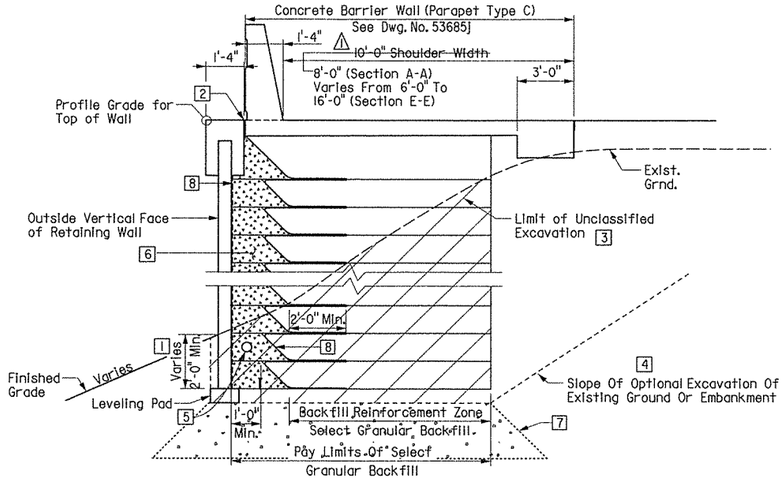

SECTION A-A & SECTION E-E ⚠
3/8" = 1'-0"

1 Top of leveling pad shall be a minimum of 2'-0" below finished grade or existing ground, whichever is lower. When C.L. Ditch is within 5'-0" of MSE Wall, then top of leveling pad shall be 2'-0" below ditch invert.

2 ½" thick preformed joint filler AASHTO M153 Type I per Section 501.02(h)(1) with ½" x 1" Type 3 or 4 joint sealer per Section 501.02(h)(2). Backer rod is not required.

3 Excavation required for area of Reinforcing Zone will be paid for under the pay item 210, "Unclassified Excavation". See SP Job 061276 "Retaining Walls" for additional information.

4 Contractor has the option of using a cut slope or shoring to maintain stability of cut. Any excavation and replacement backfill beyond the limits of Reinforcing Zone will not be paid for directly but will be considered subsidiary to various pay items. See SP Job 061276 "Retaining Walls".

5 4" Pipe Underdrain for full length of wall in accordance with Section 611 and Std. Dwg. PU-1. This work and material are to be considered subsidiary to the item "Retaining Walls" and will not be paid for directly.

6 Drainage Fill material (Class 3 Mineral Aggregate as specified in subsection 403.01). To be paid for as Select Granular Backfill.

7 Undercut where indicated on plan views.

8 Geotextile Filter Fabric (Type 2 as specified in subsection 625.02)

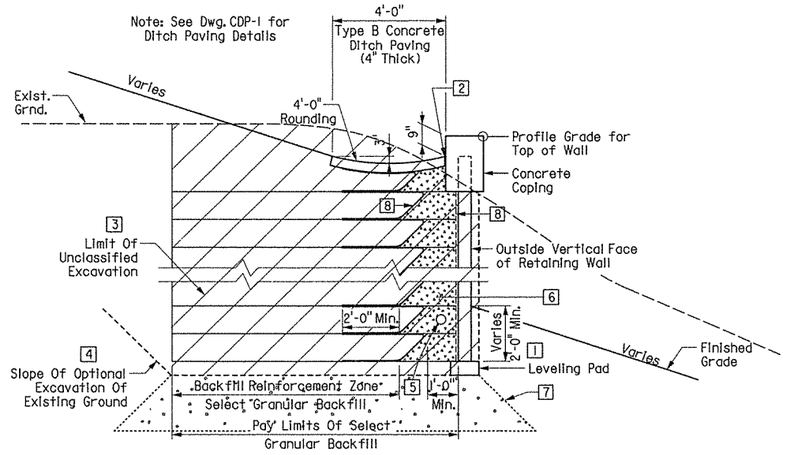

SECTION B-B
Scale: 3/8" = 1'-0"

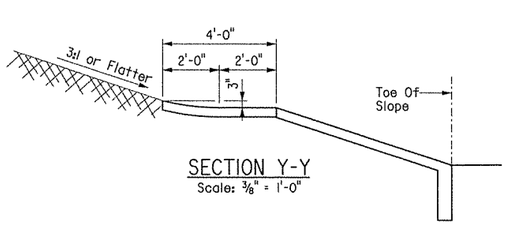

SECTION Y-Y
Scale: 3/8" = 1'-0"

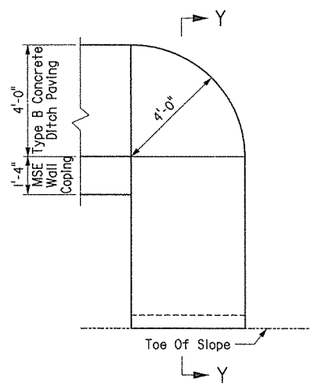

This detail is to be constructed at all outlet ends of Type B Concrete ditch paving.

DETAIL X
Scale: 3/8" = 1'-0"

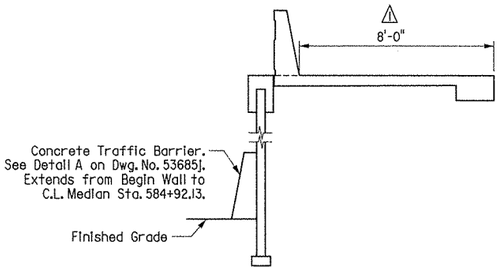

See Section A-A for additional information.

SECTION D-D
1/4" = 1'-0"

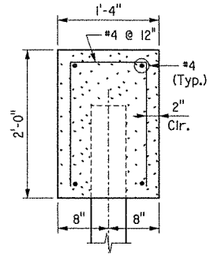

COPING DETAIL
Scale: 1" = 1'-0"

Notes:
Reinforcing steel and Class S(AE) Concrete for coping shall not be paid for directly, but will be considered subsidiary to the item "Retaining Walls".

Precast coping may be substituted for cast-in-place coping shown.

⚠ Revised width of Parapet Type C. LWM 5-21-14

STATE OF ARKANSAS REGISTERED PROFESSIONAL ENGINEER No. 13539 LARRY W. MILLER 8-12-13
BRIDGE ENGINEER

SHEET 1 OF 3
RETAINING WALL DETAILS
REDMOND RD. & MAIN ST.
STRS. & APPRS. (JACKSONVILLE) (F)
PULASKI COUNTY

ROUTE 67 SEC. 10

ARKANSAS STATE HIGHWAY COMMISSION
LITTLE ROCK, ARK.

DRAWN BY: LWM DATE: 8-12 FILENAME: b061276w_dl.dgn
CHECKED BY: GS DATE: 03-01-13 SCALE: As Shown
DESIGNED BY: LWM DATE: 8-12

BRIDGE NO. DRAWING NO. 53685g

DATE REVISED	DATE FILMED	DATE REVISED	DATE FILMED	FED. ROAD DIST. NO.	STATE	FED. AID PROJ. NO.	SHEET NO.	TOTAL SHEETS
				6	ARK.			
				JOB NO.		061276	289	438
				(1)		RETAINING WALLS		53685h

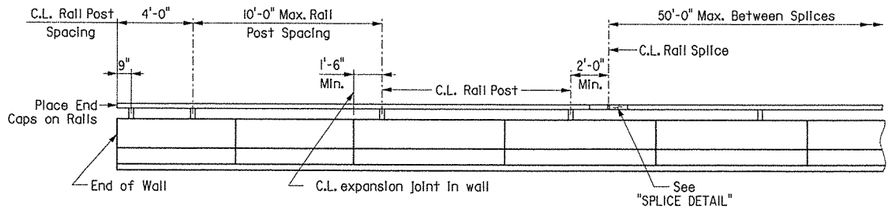

RAIL POST SPACING DETAIL

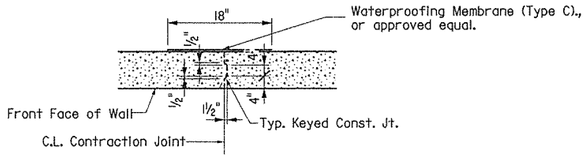

GRAVITY WALL CONTRACTION JOINT DETAIL

Space at 25'-0" maximum

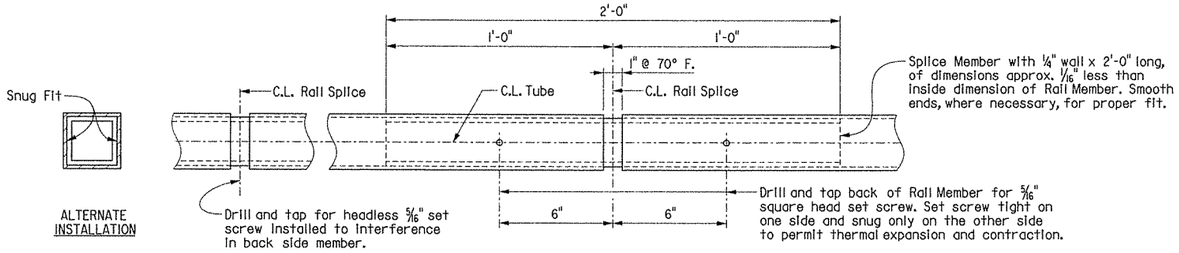

SPLICE DETAIL

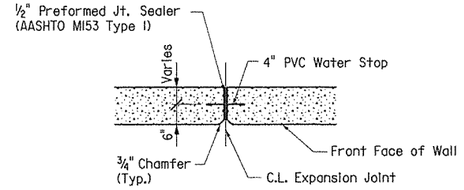

Note: The 4" Water Stop shall extend the full wall height.

GRAVITY WALL EXPANSION JOINT DETAIL

Space at 75'-0" maximum

RAILING MATERIALS:

Tubing, Posts, and Accessories: AASHTO M270, Grade. 36 or ASTM A500-Grade B.

Railing End Caps: AASHTO M270, Grade 36, galvanized.

Steel Rail Members shall be galvanized in accordance with AASHTO M 111 after fabrication.

Cast in place anchor bolts shall be of stainless steel or high strength steel. Stainless steel anchor bolts shall conform to ASTM A193 or A320-Grade B8 with a minimum yield strength of 80,000 psi. High strength steel anchor bolts shall conform to AASHTO M164 or A354-Grade BC galvanized in accordance with AASHTO M232 or ASTM B695, Class 40 or 50.

Splice Set Screws: Stainless steel, ASTM Specifications A193 or A320-Grade B8, or AASHTO M270, Grade 36, galvanized.

Nuts: Nuts shall conform to AASHTO M292, Grade 8 (Stainless steel) or AASHTO M164 galvanized in accordance with AASHTO M232 or ASTM B695, Class 40 or 50.

Threads: Threads on bolts, screws, and nuts shall conform to American Standard Coarse Series, Class 2 FIT, ASA Specification B1.1.

Washers shall be of High strength steel conforming to AASHTO M270, Grade 36, galvanized in accordance with AASHTO M232 or ASTM B695, Class 40 or 50, or of stainless steel conforming to ASTM A276 or A167-Type 302.

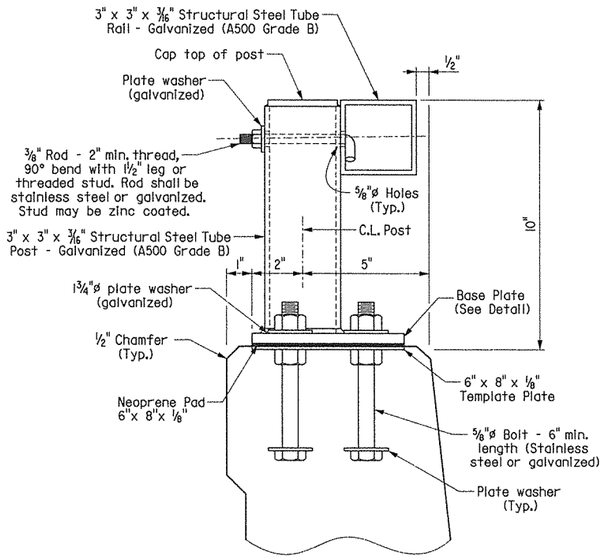

DETAILS OF POST ANCHOR SYSTEM
(CAST IN PLACE BOLTS)

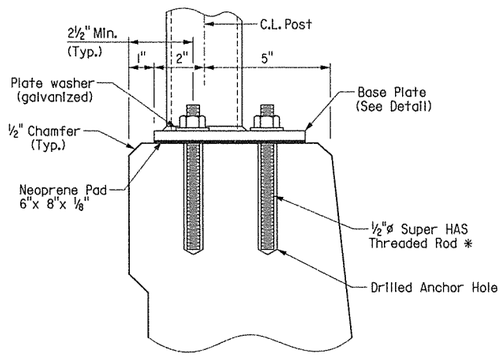

*HILTI HIT RE 500 Epoxy Adhesive Anchor System with 4½" embedment or an approved equal.

The HILTI Epoxy Adhesive Anchor System shall be installed in accordance with the manufacturer's recommendations.

DETAILS OF ALTERNATE POST ANCHOR SYSTEM
(EPOXY ADHESIVE ANCHORS)

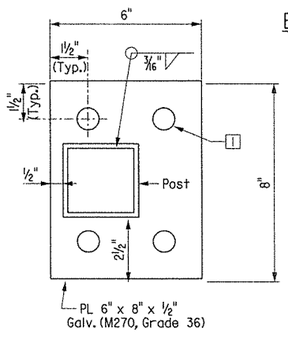

BASE PLATE

[1] 7/8"ø Holes (Cast in Place Bolts)
¾"ø Holes (Epoxy Adhesive Anchors)

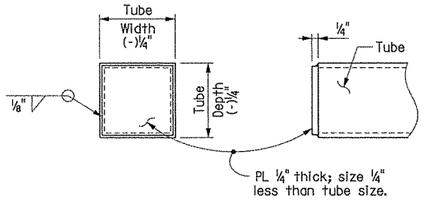

END ELEV SIDE ELEV

DETAILS OF END CAPS

NOTES FOR RAILING:

Rail layout shall conform to vertical and horizontal alignment of the retaining wall.

Maximum post spacing = 10'-0".

Minimum distance from centerline post to centerline open or contraction joints in wall = 1'-6".

Rail splices shall be at 50' maximum spacing. Centerline splices shall be located at a maximum of 2 feet from centerline of post. Rail sections shall be fabricated to attach to at least three posts.

Base plates shall not be placed upon areas that are improperly finished, deformed, or irregular.

Railing, including posts, fasteners, template plates, and neoprene pad shall not be paid for directly but shall be included in the price bid for item 802, Class B Concrete-Bridge.

STATE OF ARKANSAS
REGISTERED PROFESSIONAL ENGINEER
No. 13339
3-24-14
LARRY W. MILLER
BRIDGE ENGINEER

SHEET 2 OF 3
RETAINING WALL DETAILS
REDMOND RD. & MAIN ST.
STRS. & APPRS. (JACKSONVILLE) (F)
PULASKI COUNTY

ROUTE 67 SEC. 10

ARKANSAS STATE HIGHWAY COMMISSION
LITTLE ROCK, ARK.

DRAWN BY: LWM DATE: 8-12 FILENAME: b061276w_d2.dgn
CHECKED BY: GS DATE: 03-01-13 SCALE: None
DESIGNED BY: LWM DATE: 8-12

BRIDGE NO. DRAWING NO. 53685h

DATE REVISED	DATE FILMED	DATE REVISED	DATE FILMED	FED. ROAD DIST. NO.	STATE	FED. AID PROJ. NO.	SHEET NO.	TOTAL SHEETS
5-20-14				6	ARK.			
				JOB NO.		061276	290	438
				(1)		RETAINING WALLS		53685J

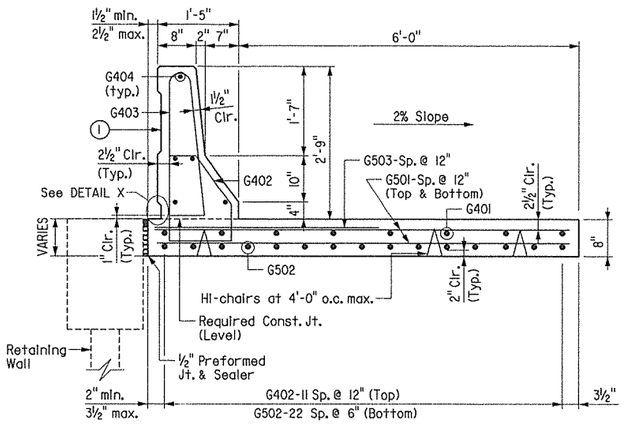

PARAPET TYPE B DETAIL

¾" = 1'-0"

(1) For Details of Rail Enhancement, See Parapet Type C Detail. Parapet Rail may be slipformed. See Dwg. No. 53658. Enhancement may be continuous if rail is slipformed or at spacing as directed by the Engineer.

Note: ½" Preformed Joint Filler (AASHTO M153, Type 1) per subsection 501.02(h)(1). Seal with ½" x 1" Type 3 or 4 Joint Sealer per subsection 501.02(h)(2)

Note: Details shown are with respect to a straight horizontal alignment. For sections of wall in curvature, transverse spacings shall be measured along the gutter line, and transverse steel shall be placed along radial lines.

BARRIER WALL GENERAL NOTES

Concrete shall be Class S(AE) (f'c = 4,000 psi).

Reinforcement Steel shall conform to AASHTO M31 or M322 Type A, Grade 60 (fy = 60,000 psi).

Minimum Lap Splice Lengths:
#4 Bars: 2'-5"
#5 Bars: 3'-0"

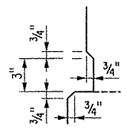

DETAIL X

No Scale

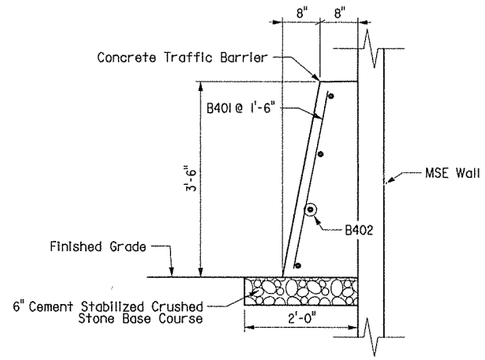

Construct contraction joints in barrier as shown in details on this drawing. Decrease spacing as necessary to align barrier joints with wall joints.

DETAIL OF SINGLE SLOPE BARRIER AT FACE OF MSE WALL

Scale: ¾" = 1'-0"

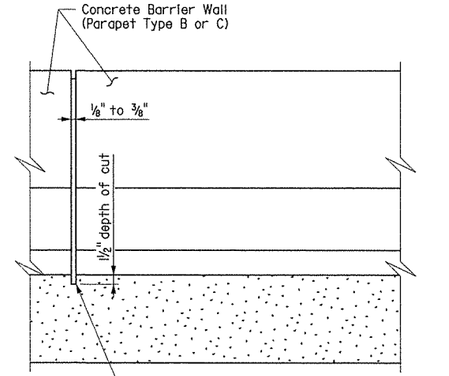

Contraction Joints shall be constructed at 15'-0" max. spacing.

1" depth joints in rail section are not required to be sealed.

Parapet Type B is shown. Similar for Parapet Type C.

DETAILS OF CONTRACTION JOINTS

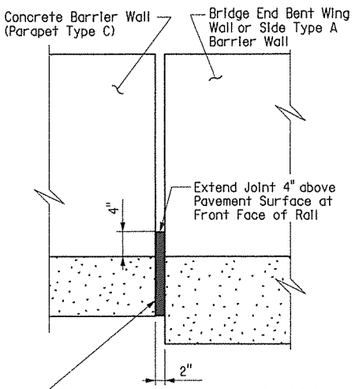

Expansion Joints shall be constructed where Type C barrier walls meet bridge end bent wing walls or Side Type A barrier walls.

DETAILS OF 2" EXPANSION JOINTS

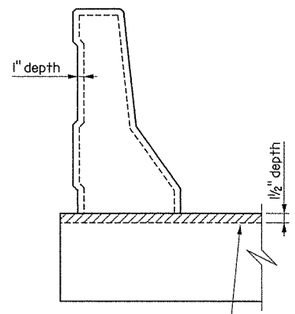

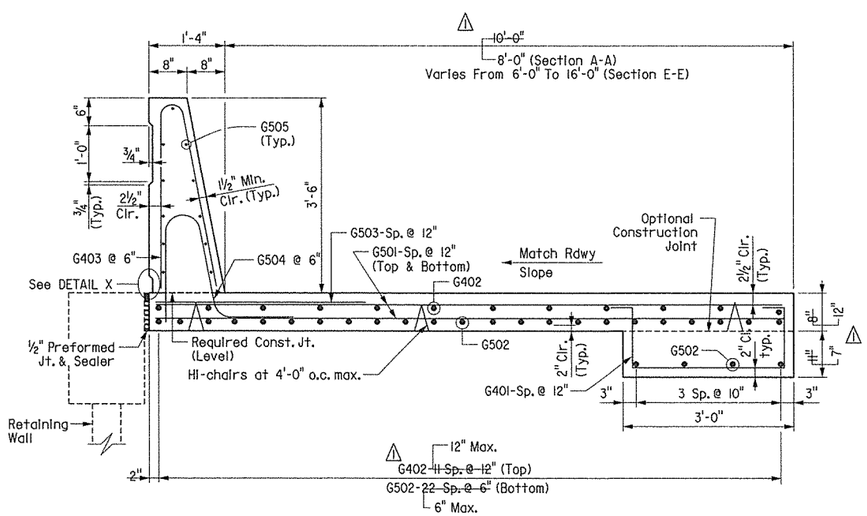

PARAPET TYPE C DETAIL

¾" = 1'-0"

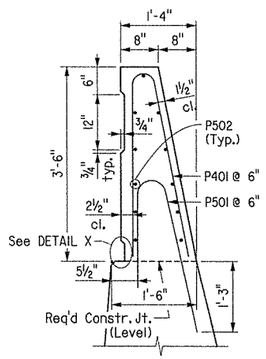

DETAIL OF SINGLE SLOPE BARRIER ON GRAVITY WALL

Scale: ¾" = 1'-0"

⚠ Revised slab width & thickness for Parapet Type C. LWM 5-20-14

STATE OF ARKANSAS
REGISTERED PROFESSIONAL ENGINEER
No. 13539
8-19-13
LARRY W. MILLER
BRIDGE ENGINEER

SHEET 3 OF 3
RETAINING WALL DETAILS
REDMOND RD. & MAIN ST.
STRS. & APPRS. (JACKSONVILLE) (F)
PULASKI COUNTY

ROUTE 67 SEC. 10

ARKANSAS STATE HIGHWAY COMMISSION
LITTLE ROCK, ARK.

DRAWN BY: LWM DATE: 8-12
CHECKED BY: GS DATE: 03-01-13
DESIGNED BY: LWM DATE: 8-12

FILENAME: b061276w_d3.dgn
SCALE: As Shown

BRIDGE NO.

DRAWING NO. 53685J

DATE REVISED	DATE FILMED	DATE REVISED	DATE FILMED	FED. ROAD DIST. NO.	STATE	FED. AID PROJ. NO.	SHEET NO.	TOTAL SHEETS
				6	ARK.			
				JOB NO.		061276	291	438
				(1) OH-067-60-26 OVERHEAD SIGNS			51135	

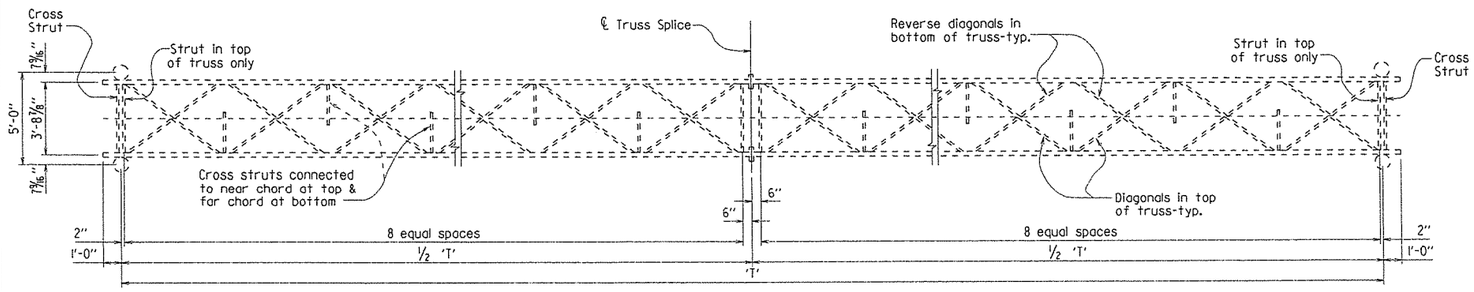

PLAN

Scale: 1/4" = 1'-0"

Details and information pertaining to existing sign structure OH-067-60-26 are for information only. Work consists of constructing new foundations as shown at the location shown on sign plan sheets, relocating the existing structure to the new foundations and removal of the existing foundations. The Contractor shall provide new bolts, u-bolts, nuts, washers and lock washers where the structure is disassembled for relocation.

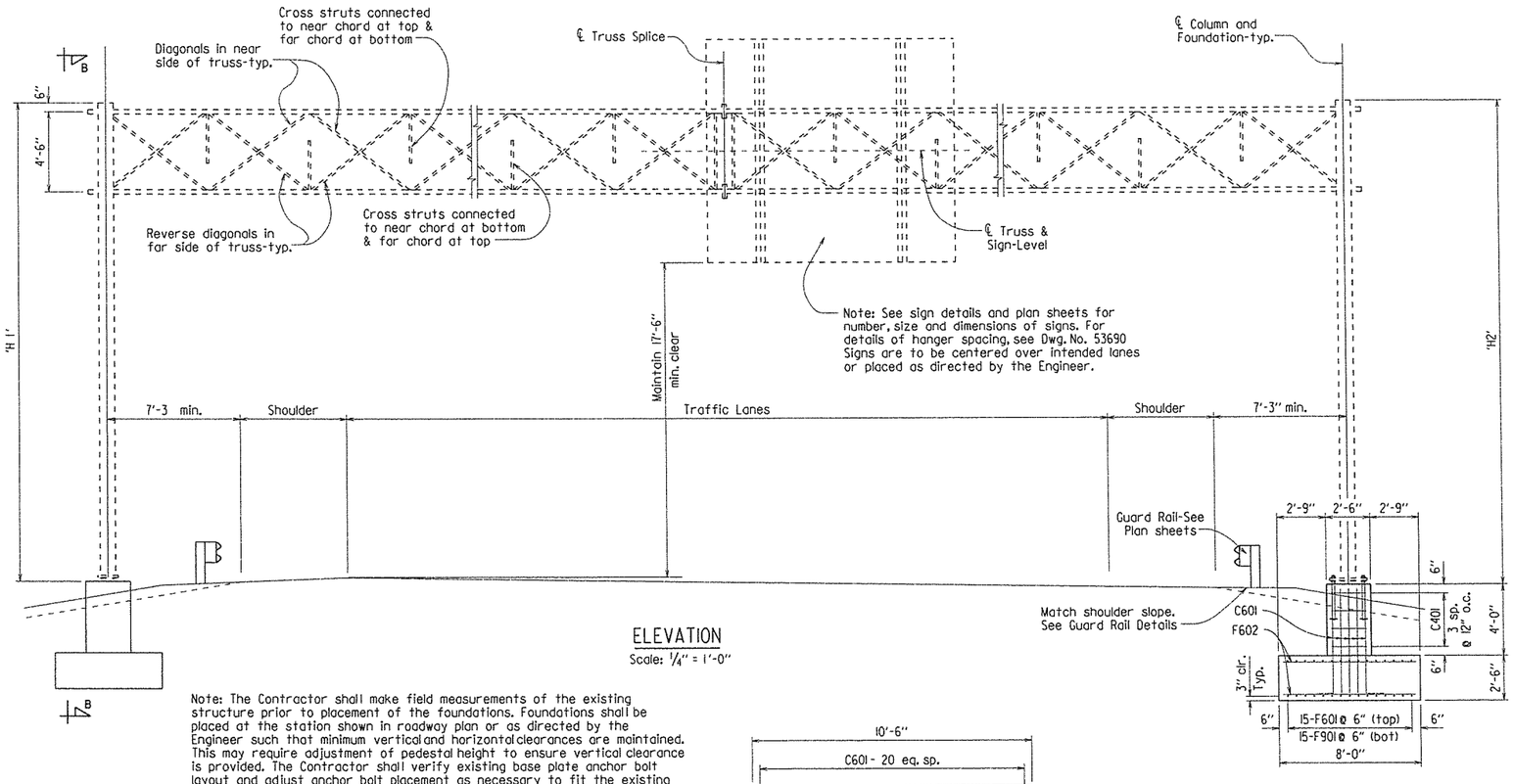

ELEVATION

Scale: 1/4" = 1'-0"

Note: The Contractor shall make field measurements of the existing structure prior to placement of the foundations. Foundations shall be placed at the station shown in roadway plan or as directed by the Engineer such that minimum vertical and horizontal clearances are maintained. This may require adjustment of pedestal height to ensure vertical clearance is provided. The Contractor shall verify existing base plate anchor bolt layout and adjust anchor bolt placement as necessary to fit the existing structure to the new foundation.

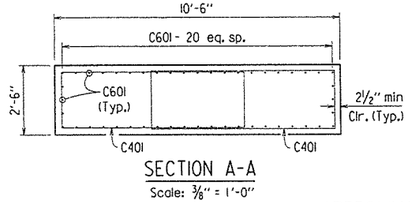

SECTION A-A

Scale: 3/8" = 1'-0"

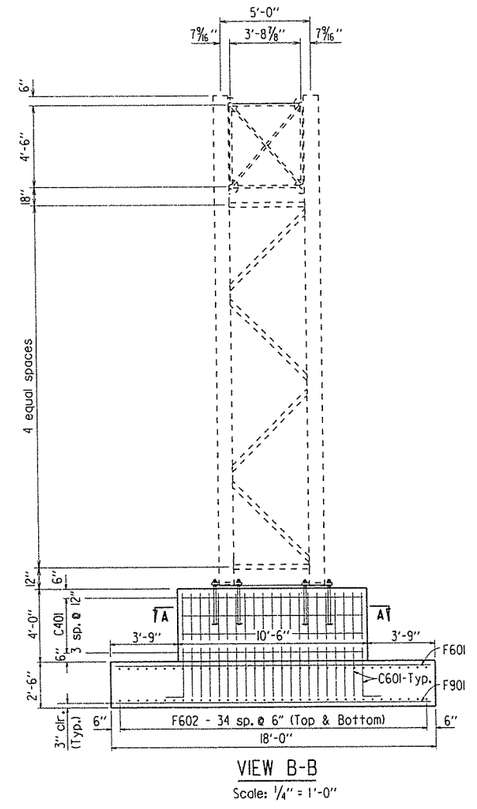

VIEW B-B

Scale: 1/4" = 1'-0"

BAR LIST-FOUNDATION - PER FOOTING

MARK	NO. REQ'D	LENGTH	P.D.	BENDING DIAGRAMS
				Dimensions are out to out of bars.
C401	8	18'-2"	2"	
C601	48	6'-9"	4 1/2"	
F601	15	17'-6"	Str.	
F602	70	7'-6"	Str.	
F901	15	17'-6"	Str.	

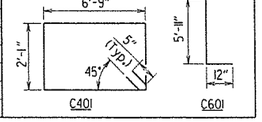

APPROXIMATE QUANTITIES FOR FOUNDATION PER FOOTING - (FOR INFORMATION ONLY)

CLASS S CONCRETE (Cu. Yds.)	REINFORCING STEEL (Lbs.)	EXCAVATION (Cu. Yds.)
17.2	2659	51

STATE OF ARKANSAS
Carl J. Fuselier
REGISTERED PROFESSIONAL ENGINEER
No. 7510
3/14/13
CARL J. FUSELIER

BRIDGE ENGINEER

SHEET 1 OF 2

DETAILS FOR RELOCATION OF EXISTING OVERHEAD SIGN STRUCTURE OH-067-60-26

ROUTE SEC.

ARKANSAS STATE HIGHWAY COMMISSION

LITTLE ROCK, ARK.

DRAWN BY: CSL DATE: 03-07-13 FILENAME: b061276_t1.dgn

CHECKED BY: CMW DATE: 3/13/13 SCALE: AS NOTED

DESIGNED BY: std. DATE: —

STRUCTURE NO. OH-067-60-26 DRAWING NO. 51135

DATE REVISED	DATE FILMED	DATE REVISED	DATE FILMED	FED. ROAD DIST. NO.	STATE	FED. AID PROJ. NO.	SHEET NO.	TOTAL SHEETS
				6	ARK.			
				JOB NO.		061276	292	438
				(1) OH-067-60-26		OVERHEAD SIGNS		51136

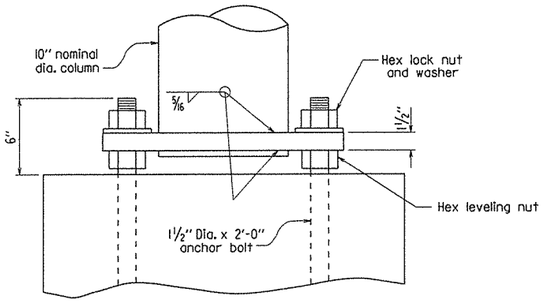

ELEVATION - COLUMN BASE

No Scale

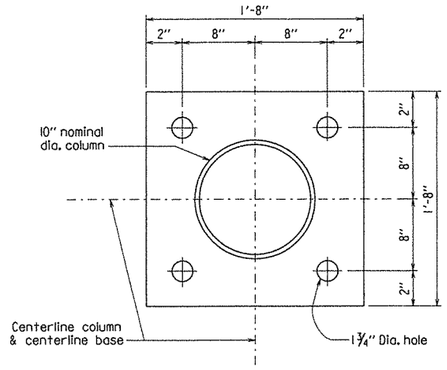

PLAN - COLUMN BASE

No Scale

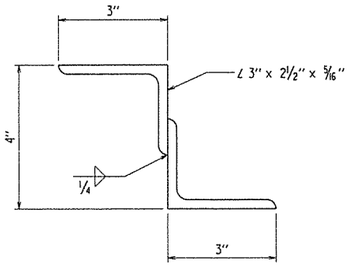

NOTE: Structural Z support may be fabricated from angles as shown.

DETAILS OF ALTERNATE Z SUPPORT

No Scale

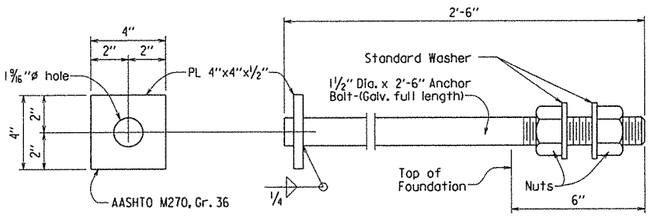

Anchor bolts shall comply with AASHTO M314, Grade 55, with Supplementary Requirement S1, and galvanized according to Section 807.07. Nuts for bolts shall be as specified in Section 807.07.

ANCHOR BOLT DETAIL

No Scale

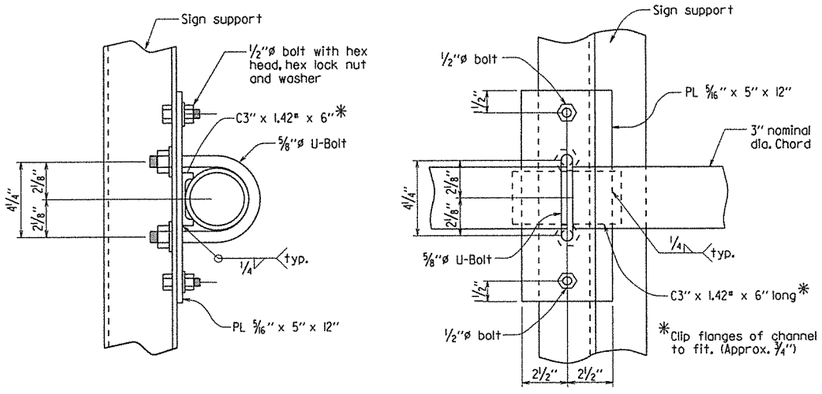

DETAILS OF SIGN SUPPORT CONNECTED TO TRUSS

No Scale

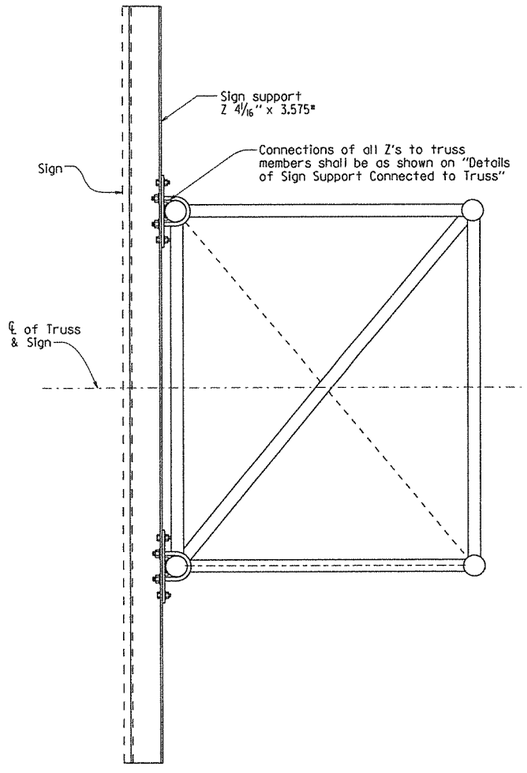

SECTION THRU TRUSS

No Scale

GENERAL NOTES

Construction Specifications: Arkansas State Highway Commission Standard Specifications for Highway Construction, Edition of 2014 with applicable Special Provisions and Supplemental Specifications.

Design Specifications: Standard Specifications for Structural Supports for Highway Signs, Luminaires and Traffic Signals, AASHTO 2001 with the 2002 and 2003 interims.

Basic Wind Speed = 90 m.p.h.

This structure is approved for 800 square feet of sign area. Use of additional sign area must be approved by the Engineer.

If the structure height ('H1' or 'H2') exceeds 30'-0" contact Bridge Division.

FOUNDATION MATERIALS AND STRENGTHS:
Class S Concrete ..... f'c = 3,500 psi
Reinforcing Steel (AASHTO M31 or M322, Type A) ..... fy = 60,000 psi

Aluminum sign support members shall comply to the following specifications for aluminum alloy:

Extrusions - Rods, Bars, and Shapes:..... ASTM B 221, 6061-T6.
Rolled Shapes:..... ASTM B 308, 6061-T6.
Sheet and Plate:..... ASTM B 209, 6061-T6.
Pipe:..... ASTM B 241, 6061-T6.
Extruded Tubing:..... ASTM B 221, 6061-T6.
Chord and Post Caps:..... Sand Castings: ASTM B26, 356-T6 or Plate: ASTM B209, 6061-T6.
Bolts:..... ASTM B 211, 2024-T4.
Nuts:..... ASTM B 211, 6061-T6 or 6262-T9.
Locknuts - Approved Type:..... ASTM B 211, 2017-T4.
Washers:..... ASTM B 209, Alclad 2024-T4.
Panel Clips, Fittings:..... Permanent Mold Castings ASTM B108, A356-T61
Splice Flanges Welded:..... ASTM B 209, 6061-T6.
Welding Rods, Electrodes:..... ER4043 or ER5556, AWS A5.10, Consumable Electrode Type

Extruded aluminum tubing, not less in diameter and wall thickness than that of the member shown, may be used in lieu of pipe.

For aluminum sign supports, ASTM A325 Type I bolts, galvanized according to Subsection 807.06 may be used in lieu of aluminum alloy. Nuts for bolts shall be furnished and galvanized in accordance with Subsection 807.06.

Anchor bolts shall comply with AASHTO M314, Grade 55, with Supplementary Requirement S1, and galvanized according to Section 807.07. Nuts for bolts shall be as specified in Section 807.07.

U-bolts and flange splice bolts shall comply with ASTM A325 Type I, galvanized according to Subsection 807.06. Nuts and washers for ASTM A325 Type I bolts shall be furnished and galvanized in accordance with subsection 807.06.

Locknuts to be equipped with nylon locking inserts or other approved type locking system. Locknuts to be installed according to manufacturer's recommendations.

All aluminum welds to be consumable electrode type using aluminum alloy ER5556 for material thickness greater than 0.375 inch or ER5556 or ER4043 for material thickness less than or equal to 0.375 inch, as filler material, AWS A5.10, minimum test strength 24,000 psi.

The excavations for the footings shall be back-filled before the structure is attached to the foundations

The Contractor shall make check measurements in the field and make any adjustments necessary to meet the required clearances and to fit the new structures to the existing conditions.

STATE OF ARKANSAS
CARL L. FUSELIER
REGISTERED PROFESSIONAL ENGINEER
No. 7510
4/3/14

BRIDGE ENGINEER

SHEET 2 OF 2
DETAILS FOR RELOCATION OF EXISTING OVERHEAD SIGN STRUCTURE
OH-067-60-26

ROUTE SEC.

ARKANSAS STATE HIGHWAY COMMISSION
LITTLE ROCK, ARK.

DRAWN BY: CSL DATE: 03-07-13 FILENAME: b061276_t1.dgn
CHECKED BY: CWW DATE: 4/3/14 SCALE: AS NOTED
DESIGNED BY: std. DATE: ---

STRUCTURE NO. OH-067-60-26 DRAWING NO. 51136

DATE REVISED	DATE FILMED	DATE REVISED	DATE FILMED	FED. ROAD DIST. NO.	STATE	FED. AID PROJ. NO.	SHEET NO.	TOTAL SHEETS
				6	ARK.			
				JOB NO.		061276	273438	
				(1) OH-067-60-22 & OH-067-60-29		SIGN STRUCTURE		53686

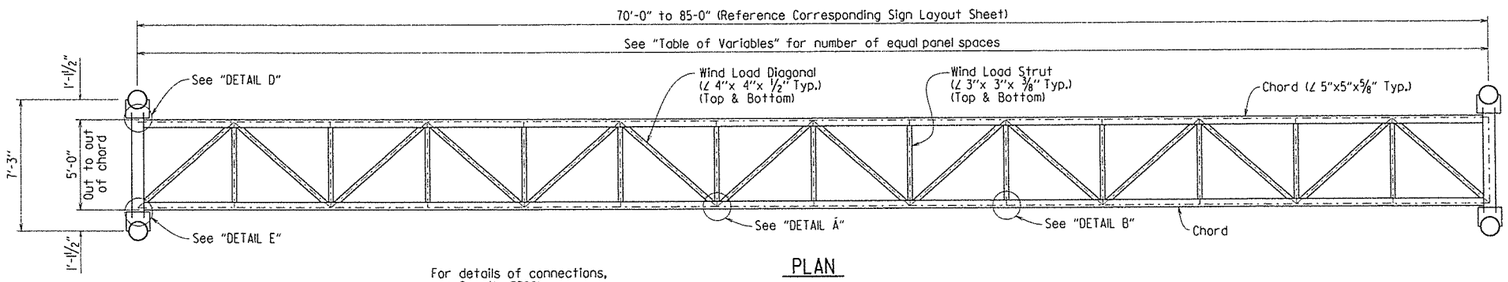

PLAN

For details of connections, see Dwg. No. 53061.

* Note: The Contractor shall make field measurements to determine the Column heights "H1" and "H2" that are required to maintain the minimum vertical clearance with the centerline of the sign located at the centerline of the truss. These column heights shall be shown on the shop drawings with a note stating that the Contractor has made the required field measurements. If the structure height ("H1" or "H2") exceeds 30'-0" contact the Engineer. The Contractor shall also verify that the variable span length (70'-0" to 85'-0") is sufficient to meet the minimum clearances and to fit the new structure to the existing and/or proposed conditions.

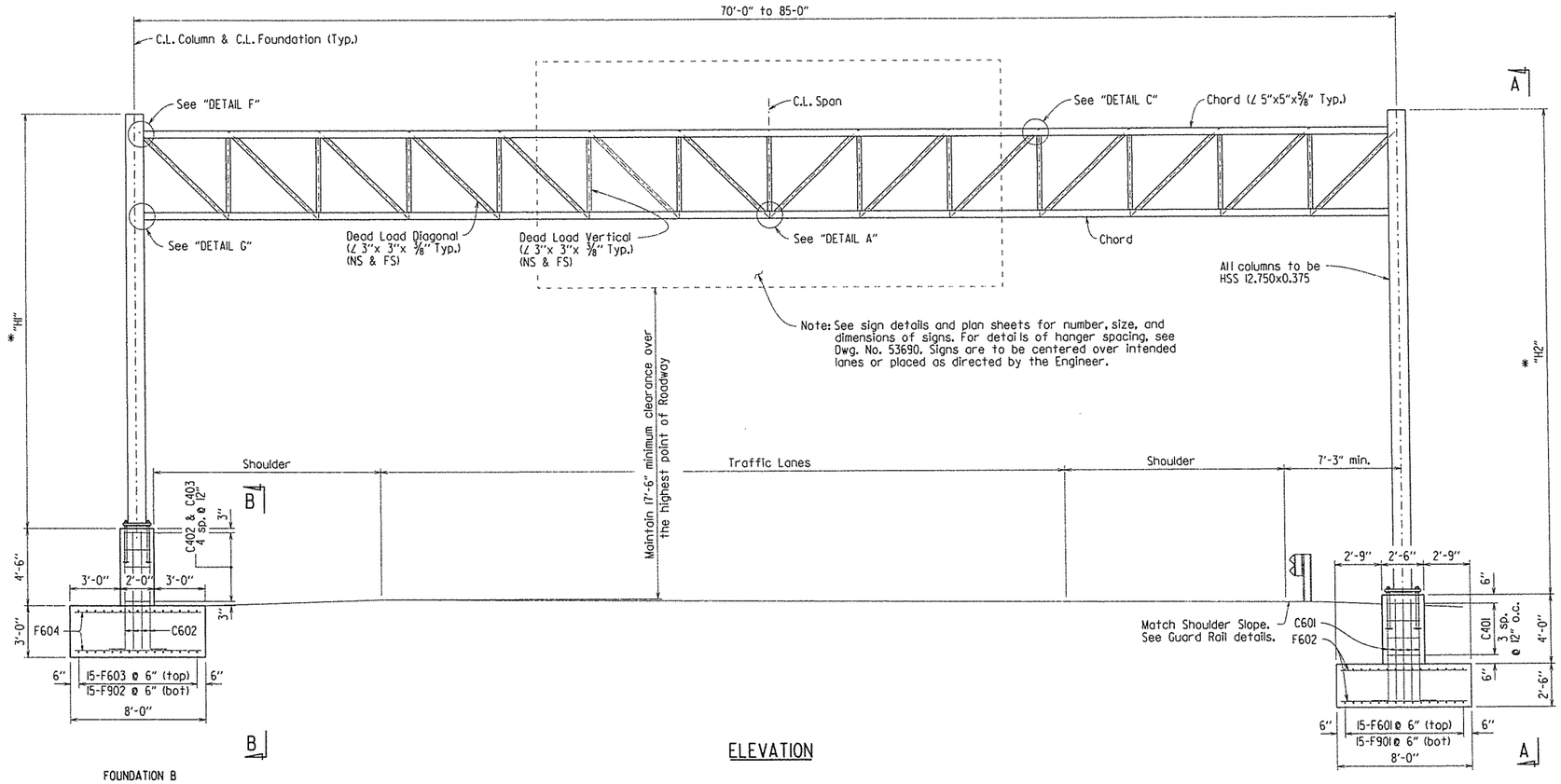

ELEVATION

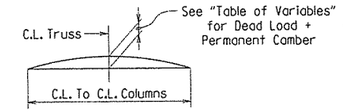

TRUSS CAMBER DIAGRAM

TABLE OF VARIABLES

Span (ft)	No. of Equal Panel Spaces	Dead Load + Permanent Camber
70' thru 75'	14	1"
76' thru 85'	16	1¼"

APPROXIMATE QUANTITIES FOR FOUNDATION (FOR INFORMATION ONLY)

FOUNDATION	CLASS S CONCRETE (Cu. Yds.)	REINFORCING STEEL (Lbs.)	EXCAVATION (Cu. Yds.)
A	17.2	2659	51
B	22.0	3137	26

TABLE OF FOUNDATIONS

FOUNDATION		SIGN STRUCTURE
MEDIAN	OUTSIDE SHOULDER	
B	A	OH-067-60-22, OH-067-60-29
-	-	

BAR LIST-FOUNDATION 'A'

MARK	NO. REQ'D	LENGTH	P.D.	BENDING DIAGRAMS
				Dimensions are out to out of bars.
C401	8	18'-2"	3"	
C601	48	6'-9"	4½"	
F601	15	17'-6"	Str.	
F602	70	7'-6"	Str.	
F901	15	17'-6"	Str.	

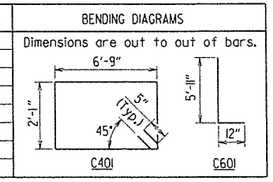

BAR LIST-FOUNDATION 'B'

MARK	NO. REQ'D	LENGTH	P.D.	BENDING DIAGRAMS
				Dimensions are out to out of bars.
C402	10	17'-8"	3"	
C403	5	24'-8"	3"	
C602	74	7'-9"	4½"	
F603	15	17'-6"	Str.	
F604	70	7'-6"	Str.	
F902	15	17'-6"	Str.	

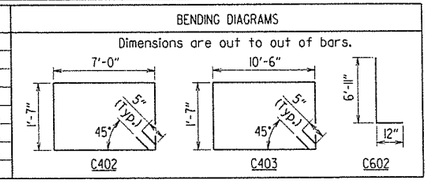

STATE OF ARKANSAS
Carl F. Fuselier
REGISTERED PROFESSIONAL ENGINEER
No. 7510
3/14/13
CARL F. FUSELIER

BRIDGE ENGINEER

SHEET 1 OF 5
DETAILS FOR 70' TO 85'
STEEL OVERHEAD SIGN STRUCTURES
REDMOND RD. & MAIN ST.
STRS. & APPRS. (JACKSONVILLE) (F)
PULASKI COUNTY

ROUTE 67 SEC. 10

ARKANSAS STATE HIGHWAY COMMISSION
LITTLE ROCK, ARK.

DRAWN BY: CSL DATE: 03/07/13 FILENAME: b061276_t1.dgn
CHECKED BY: CMJ DATE: 3/12/13 SCALE: NOT TO SCALE
DESIGNED BY: KBR DATE: 3/8/13
STR. NO. OH-067-60-22 & OH-067-60-29 DRAWING NO. 53686

DATE REVISED	DATE FILMED	DATE REVISED	DATE FILMED	FED. ROAD DIST. NO.	STATE	FED. AID PROJ. NO.	SHEET NO.	TOTAL SHEETS
				6	ARK.			
				JOB NO.		061276	294	438
				(1) OH-067-60-22 & OH-067-60-29		SIGN STRUCTURE		53687

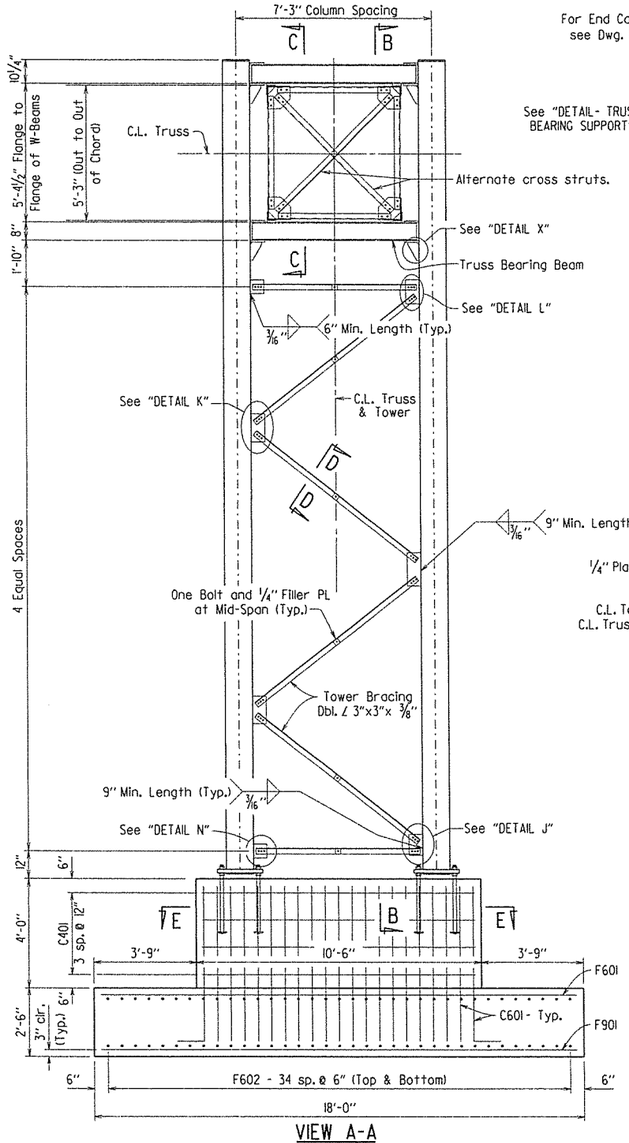

VIEW A-A

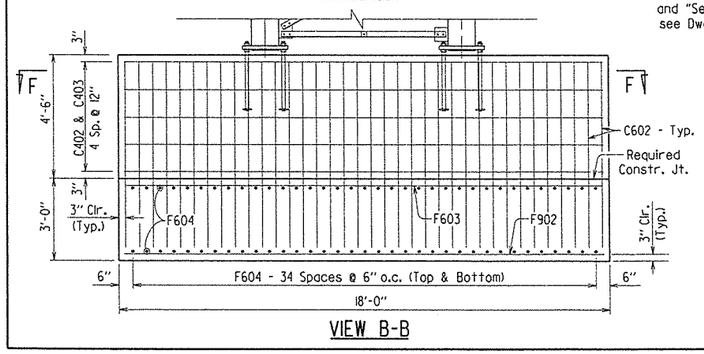

VIEW B-B

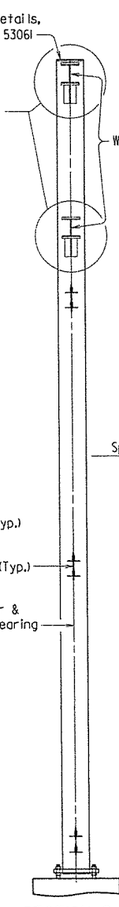

SECTION B-B

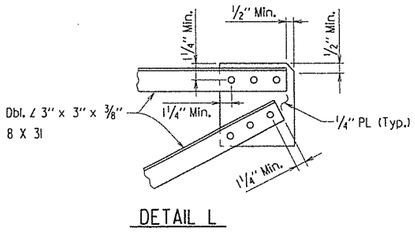

DETAIL L

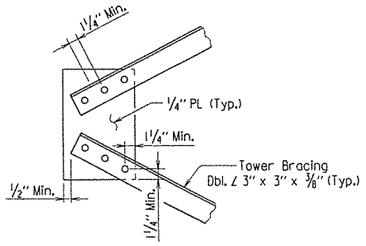

DETAIL K

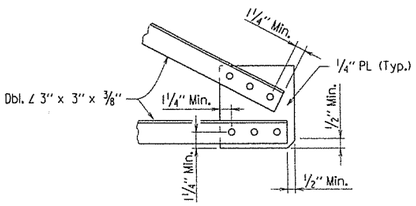

DETAIL J

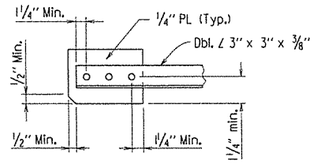

DETAIL N

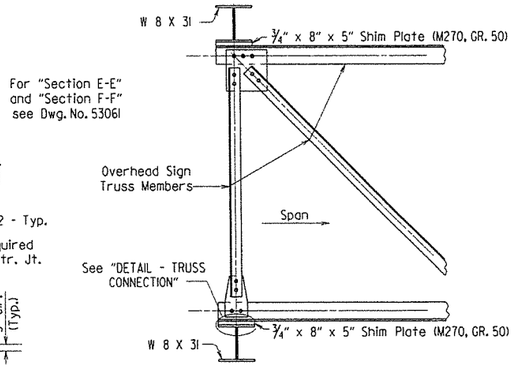

SECTION C-C

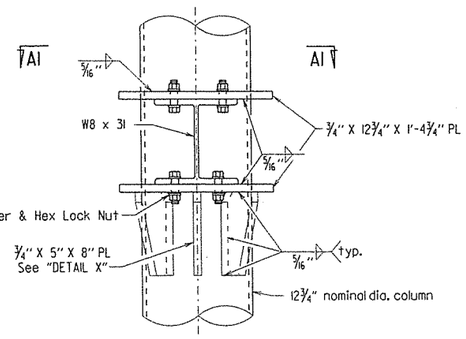

DETAIL - TRUSS BEARING SUPPORT

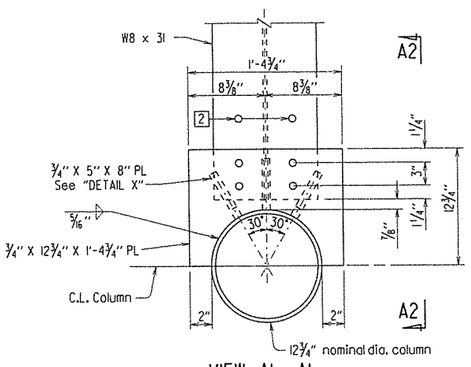

VIEW A1 - A1

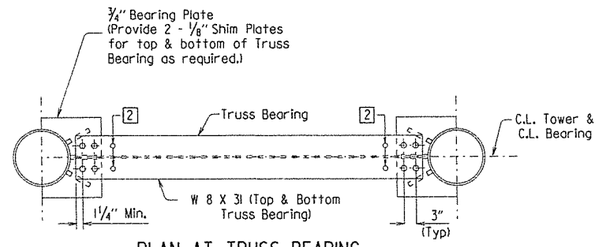

PLAN AT TRUSS BEARING

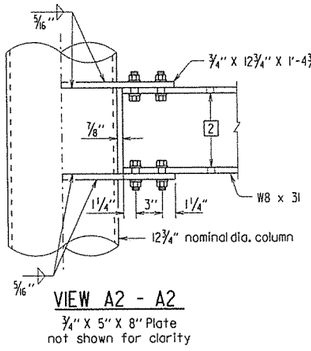

VIEW A2 - A2
¾" X 5" X 8" Plate not shown for clarity

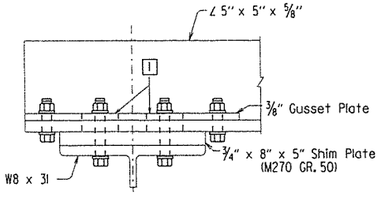

DETAIL - TRUSS CONNECTION

1" 1" 1" 8" 1" 5"

DETAIL X

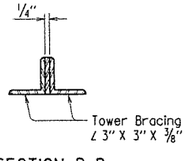

SECTION D-D

STATE OF ARKANSAS
Carl S. Fuselier
REGISTERED PROFESSIONAL ENGINEER
No. 7510
CARL FUSELIER
3/14/13

BRIDGE ENGINEER

[1] Slotted Hole in Gusset Plate and Chord Angle 11/16" X 2". Use plate washer on Gusset plate side. 11/16" ø holes in ¾" shim plate and beam flange.

[2] 11/16" Dia. holes at top or bottom flanges as required.

SHEET 2 OF 5
DETAILS FOR 70' TO 85'
STEEL OVERHEAD SIGN STRUCTURES
REDMOND RD. & MAIN ST.
STRS. & APPRS. (JACKSONVILLE) (F)
PULASKI COUNTY

ROUTE 67 SEC. 10

ARKANSAS STATE HIGHWAY COMMISSION
LITTLE ROCK, ARK.

DRAWN BY: CSL DATE: 03/07/13 FILENAME: b061276_tl.dgn
CHECKED BY: CMW DATE: 3/13/13 SCALE: NOT TO SCALE
DESIGNED BY: RBR DATE: 8/8/12
STR. NO. OH-067-60-22 & OH-067-60-29 DRAWING NO. 53687

DATE REVISED	DATE FILMED	DATE REVISED	DATE FILMED	FED. ROAD DIST. NO.	STATE	FED. AID PROJ. NO.	SHEET NO.	TOTAL SHEETS
				6	ARK.			
				JOB NO.		061276	Z95	438
				(1) OH-067-60-22 & OH-067-60-29		SIGN STRUCTURE		53688

Note: All Gusset Plate thicknesses shall be 3/8".

[1] Slotted Hole in Gusset Plate and Chord Angle 11/16" X 2". Use plate washer on Gusset plate side. 11/16" ø holes in 3/4" shim plate and beam flange.

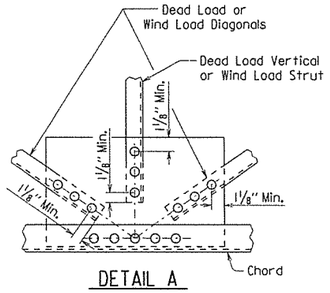

DETAIL A

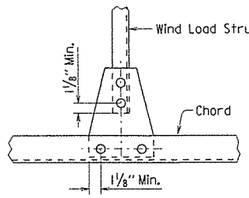

DETAIL B

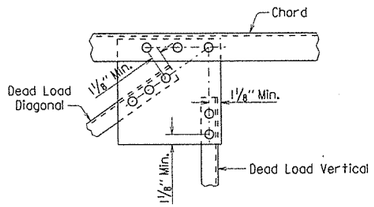

DETAIL C

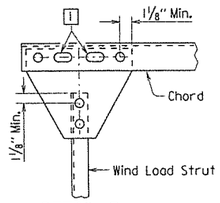

DETAIL D

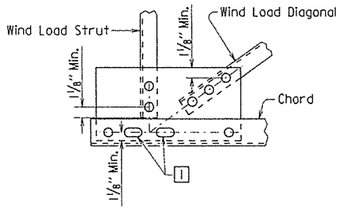

DETAIL E

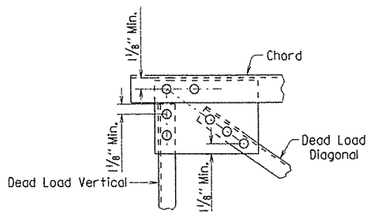

DETAIL F

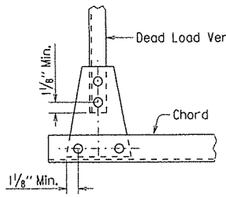

DETAIL G

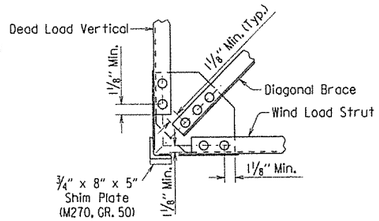

DETAIL M

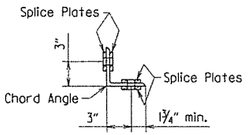

SECTION ON C.L. SPLICE

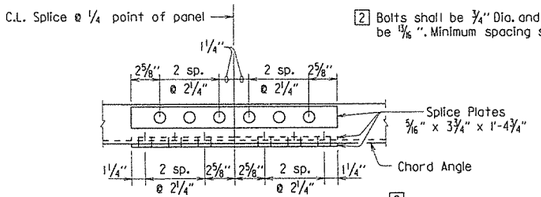

[2] Bolts shall be ¾" Dia. and holes shall be 15/16". Minimum spacing shall be 2¼".

CHORD SPLICE USING PLATES [2]

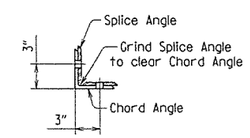

SECTION ON C.L. SPLICE

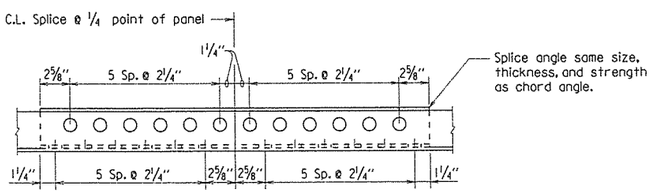

OPTIONAL CHORD SPLICE USING ANGLES [2]
Place Splice Angle on inside of Truss

Note: Chord angles may be spliced in convenient lengths for galvanizing and sign placement.

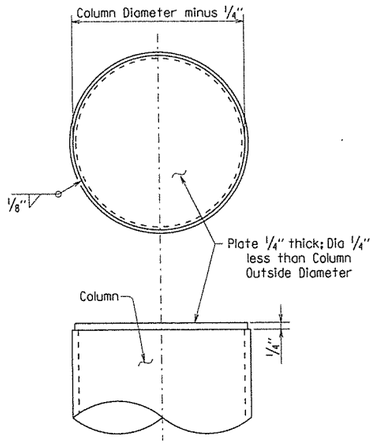

END CAP DETAILS

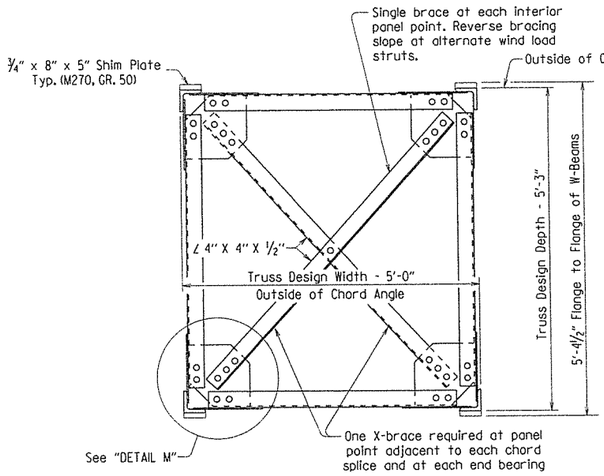

TRUSS SECTION

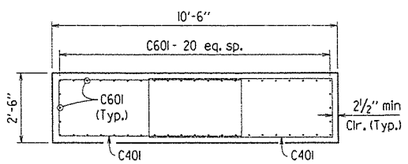

SECTION E-E
Foundation A

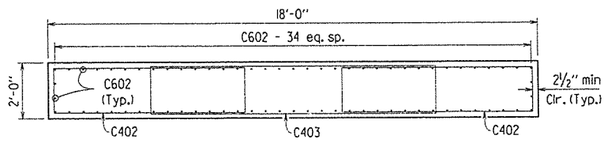

SECTION F-F
Foundation B

STATE OF ARKANSAS
Carl J. Fuselier
REGISTERED PROFESSIONAL ENGINEER
No. 7510
3/14/13
CARL J. FUSELIER

BRIDGE ENGINEER

SHEET 3 OF 5
DETAILS FOR 70' TO 85'
STEEL OVERHEAD SIGN STRUCTURES
REDMOND RD. & MAIN ST.
STRS. & APPRS. (JACKSONVILLE) (F)
PULASKI COUNTY

ROUTE 67 SEC. 10

ARKANSAS STATE HIGHWAY COMMISSION
LITTLE ROCK, ARK.

DRAWN BY: CSL DATE: 03/07/13 FILENAME: b061276_tl.dgn
CHECKED BY: CMH DATE: 3/13/13 SCALE: NOT TO SCALE
DESIGNED BY: RBR DATE: 9/8/12
STR. NO. OH-067-60-22 & OH-067-60-29 DRAWING NO. 53688

DATE REVISED	DATE FILMED	DATE REVISED	DATE FILMED	FED. ROAD DIST. NO.	STATE	FED. AID PROJ. NO.	SHEET NO.	TOTAL SHEETS
				6	ARK.			
				JOB NO.		061276	296	438
				(1) OH-067-60-22 & OH-067-60-29		SIGN STRUCTURE		53689

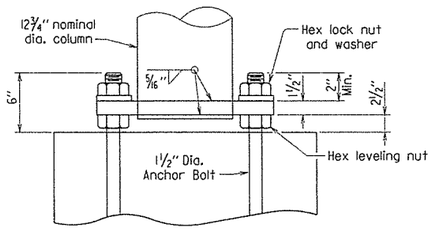

ELEVATION - COLUMN BASE

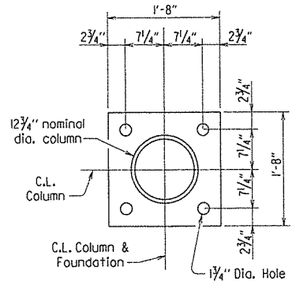

PLAN - COLUMN BASE

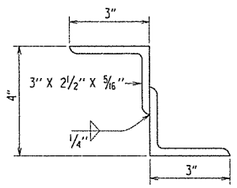

NOTE: Structural Z support may be fabricated from angles as shown.

DETAILS OF ALTERNATE Z SUPPORT

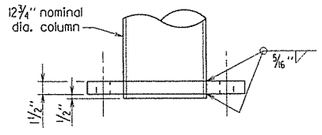

Note: Diameter of hole in base plate to be ⅛" larger than column diameter.

DETAIL OF COLUMN CONNECTION TO BASE PLATE

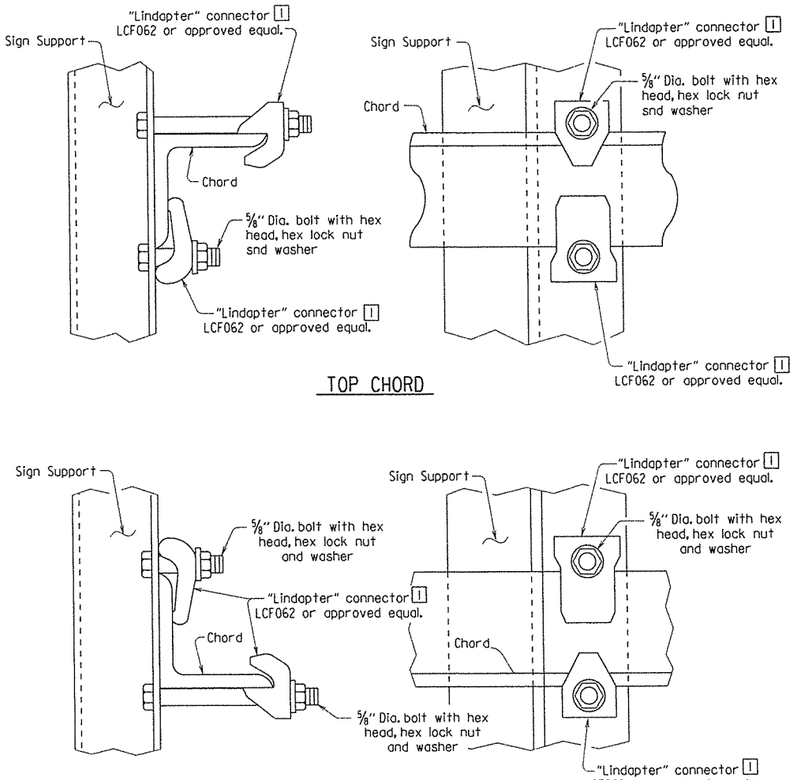

TOP CHORD

BOTTOM CHORD

[1] Note: All "Lindapter" connectors or approved equal shall be installed according to manufacturer's recommendations. All connectors, bolts, nuts and washers shall be galvanized.

Note: Install all support connectors clear of the gusset plates and splice locations.

DETAIL OF SIGN SUPPORT CONNECTED TO TRUSS

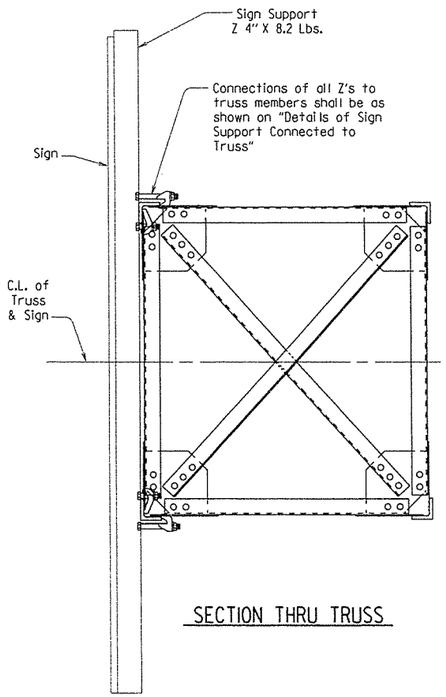

SECTION THRU TRUSS

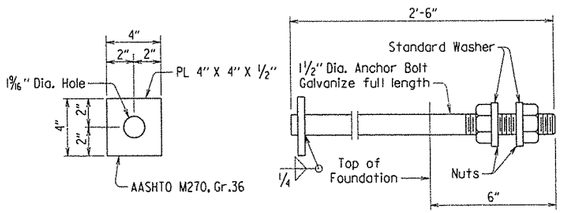

Anchor bolts shall comply with AASHTO M314, Grade 55, with Supplementary Requirement S1, and galvanized according to Section 807.07. Nuts for bolts shall be as specified in Section 807.07.

ANCHOR BOLT DETAIL

STATE OF ARKANSAS
Carl J. Fussliber
REGISTERED PROFESSIONAL ENGINEER
No. 7510
3/14/13
CARL J. FUSSLIBER

BRIDGE ENGINEER

SHEET 4 OF 5
DETAILS FOR 70' TO 85'
STEEL OVERHEAD SIGN STRUCTURES
REDMOND RD. & MAIN ST.
STRS. & APPRS. (JACKSONVILLE) (F)
PULASKI COUNTY

ROUTE 67 SEC. 10

ARKANSAS STATE HIGHWAY COMMISSION
LITTLE ROCK, ARK.

DRAWN BY: CSL DATE: 03/07/13 FILENAME: b061276_t1.dgn
CHECKED BY: CWJ DATE: 3/18/13 SCALE: NOT TO SCALE
DESIGNED BY: RBR DATE: 8/8/12
STR. NO. OH-067-60-22 & OH-067-60-29 DRAWING NO. 53689

DATE REVISED	DATE FILMED	DATE REVISED	DATE FILMED	FED. ROAD DIST. NO.	STATE	FED. AID PROJ. NO.	SHEET NO.	TOTAL SHEETS
				6	ARK.			
				JOB NO.		061276	297	438
				(1) 0H-067-60-22 & 0H-067-60-29			SIGN STRUCTURE	53690

GENERAL NOTES:
Construction Specifications: Arkansas State Highway Commission Standard Specifications for Highway Construction, Edition of 2014, with applicable special provisions and Supplemental Specifications.

Design Specifications: Standard Specifications for Structural supports for Highway Signs, Luminaries and Traffic Signals, AASHTO Fifth Edition 2009.

Basic Wind Speed = 90 m.p.h.

Fatigue Category I

This structure is approved for a sign area equivalent to 75% of the span at 15' tall. Use of additional sign area must be approved by the Engineer. If the structure height ('H1' or 'H2') exceeds 30'-0" contact the engineer.

FOUNDATION MATERIALS AND STRENGTHS:
Class S Concrete f'c = 3,500 psi
Reinforcing Steel (AASHTO M31 or M322, Type A) fy = 60,000 psi

Structural steel sign support members shall comply with the following specifications:

Angles:	AASHTO M270, Grade 36 (Fy = 36,000 psi).
Plate, W-Section, WT-Section:	AASHTO M270, Grade 50 (Fy = 50,000 psi).
[1] Pipe:	ASTM A139 Grade C, straight-seam welded (Fy = 42,000 psi).
	ASTM A500 Grade B (Fy = 42,000 psi).
	ASTM A501 Grade B (Fy = 50,000 psi).
	ASTM A714 Class 2, Grade II, Type E or S (Fy = 50,000 psi).
All grades of pipe require Heat traceability back to the original melting mill	
Z-Shapes:	AASHTO M270, Grade 36 (Fy = 36,000 psi).
Shim Plates:	ASTM A1011, SS, Grade 36, Type 2, or Grade 40.
Bolts:	ASTM A325, Type I.
Locknuts - Approved Type:	Meeting or exceeding AASHTO M292
Washers:	ASTM F436
Nuts:	ASTM A563 or AASHTO M292, Grade 2H or Grade DH (Grade 10S)

All steel shall be Galvanized according to section 807.19. Steel completely encased in concrete may not be Galvanized.

Drawings show general features of design only. Shop drawings shall be made in accordance with section 807.04, submitted, and approval secured before fabrication is begun.

No circumferential butt welds will be allowed in any pipe sections.

Requests for substitution of structural steel shapes shown with shapes of greater size must be submitted by the Contractor to the Engineer for approval. Steels of equal or greater strengths will be accepted only when shown on the approved shop drawings. Shapes and materials shown in the plans will be the basis of payment and no additional compensation will be made for any adjustments due to substitutions.

Connections shall be bolted with high-strength bolts. Unless noted otherwise, bolts shall be 5/8" diameter and open holes shall be 11/16". Bolt spacing shall be 2 1/4" for 5/8" diameter bolts unless otherwise noted. Bolts shall be placed with heads on the outside face of all members.

All welding that is to be done during fabrication of structural steel, including temporary welds, shall be detailed on the shop drawings and submitted for approval. If additional welds are required, whether temporary or permanent, a formal request with detailed drawings shall be submitted to the Engineer for approval. All welding shall conform to subsection 807.26.

Anchor bolts shall comply with AASHTO M314, Grade 55, with Supplementary Requirement S1, and galvanized according to Section 807.07. Nuts and washers for anchor bolts shall be furnished and galvanized in accordance with subsection 807.07. Anchor bolts shall be pretensioned in accordance with Special Provision Job 061276 "STEEL SIGN STRUCTURES".

All truss frame bolts shall comply with ASTM A325, Type I, galvanized according to Subsection 807.06, Nuts and washers for ASTM A325, Type 1 bolts shall be furnished and galvanized in accordance with subsection 807.06.

Field splices shall be located in order to avoid sign panel connections, There shall be a maximum of two field splices and they shall be spaced a minimum of 15 ft. apart.

All main load carrying tension members greater than ½" in thickness shall conform to the requirements of the Longitudinal Charpy V-notch test specified for Zone I minimum service temperature. This work and materials shall be paid for in accordance with Special Provision Job 061276 "STEEL SIGN STRUCTURES".

All fillet welds of critical members shall be tested according to AWS D1.1 Structural Welding Code - Steel, using the magnetic particle method, Critical welds shall include: column to base plate and truss bottom support to column.

Truss field sections shall be shop assembled. Entire truss shall be fully assembled and lifted into place as one unit on to tower supports.
All truss member connections shall be bolted connections.

Lock nuts to be equipped with nylon locking inserts or other approved type locking system. Lock nuts to be installed according to manufacturer's recommendations.

The excavations for the footings shall be back-filled before the structure is attached to the foundations.

Galvanized Coating damaged during transport, handling, or erection shall be field repaired in accordance with section 807.88.

The Contractor shall make check measurements in the field and make any adjustments necessary to meet the required clearances and to fit the new structures to the existing conditions.

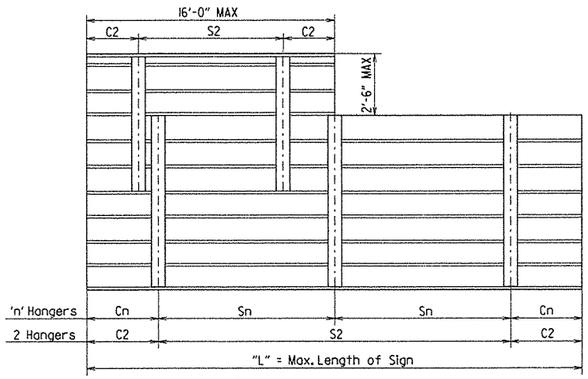

Note: See sign details and plan sheets for number, size and dimensions of signs.

HANGER SPACING DETAILS FOR EXTRUDED PANEL SIGNS

[1] In addition to material requirements, all pipe used for welded applications shall have a maximum carbon equivalency (CE) of 0.4 using the following equation: CE = %C + Mn/6 + %Cu/40 + %Ni/20 + %Cr/10 - %Mo/50 - %V/10

HANGER VARIABLES

Max. Length of Sign = "L"	"n" Hangers	Cantilever Length "Cn"	Hanger Spacing 'Sn'
15'-0"	2 Hangers	0.21 x 'L'	0.58 x 'L'
30'-0"	3 Hangers	0.145 x 'L'	0.355 x 'L'
45'-0"	4 Hangers	0.107 x 'L'	0.262 x 'L'

Hanger spacing and cantilever length shall be rounded to the nearest inch.

ISOMETRIC VIEW

STATE OF ARKANSAS
Carl S. Puselier
REGISTERED PROFESSIONAL ENGINEER
No. 7510
4/3/14
CARL S. PUSELIER

BRIDGE ENGINEER

SHEET 5 OF 5
DETAILS FOR 70' TO 85'
STEEL OVERHEAD SIGN STRUCTURES
REDMOND RD. & MAIN ST.
STRS. & APPRS. (JACKSONVILLE) (F)
PULASKI COUNTY

ROUTE 40 SEC. 32
ARKANSAS STATE HIGHWAY COMMISSION
LITTLE ROCK, ARK.

DRAWN BY: CSL DATE: 03/07/13 FILENAME: b061276_t1.dgn
CHECKED BY: C.M.W DATE: 4/3/14 SCALE: NOT TO SCALE
DESIGNED BY: Std. DATE: —
STR. NO. 0H-067-60-22 & 0H-067-60-29 DRAWING NO. 53690

DATE REVISED	DATE FILMED	DATE REVISED	DATE FILMED	FED. ROAD DIST. NO.	STATE	FED. AID PROJ. NO.	SHEET NO.	TOTAL SHEETS
				6	ARK.		2.95	
				JOB NO.				

(1) EMBANKMENT & BACKFILL 55000

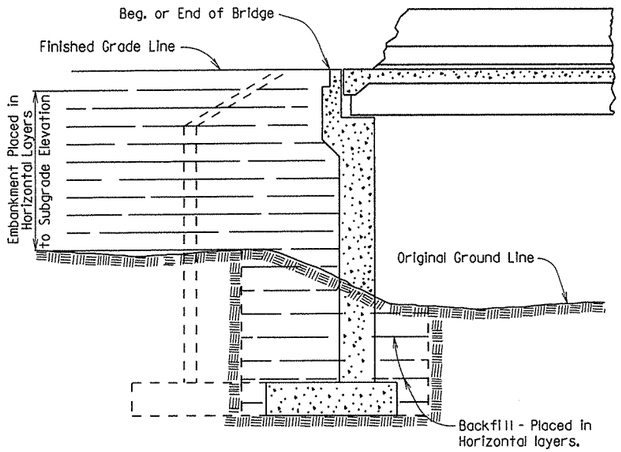

EMBANKMENT CONSTRUCTION AND FOOTING BACKFILL AT VERTICAL WALL ABUTMENTS

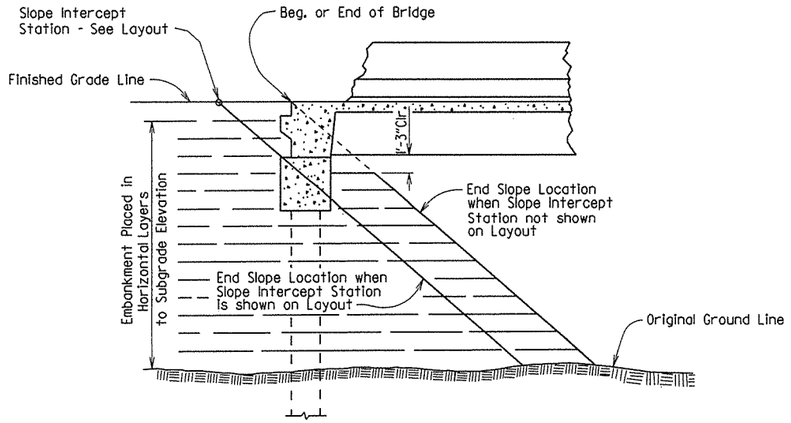

EMBANKMENT CONSTRUCTION AT SPILL-THROUGH PILE END BENTS

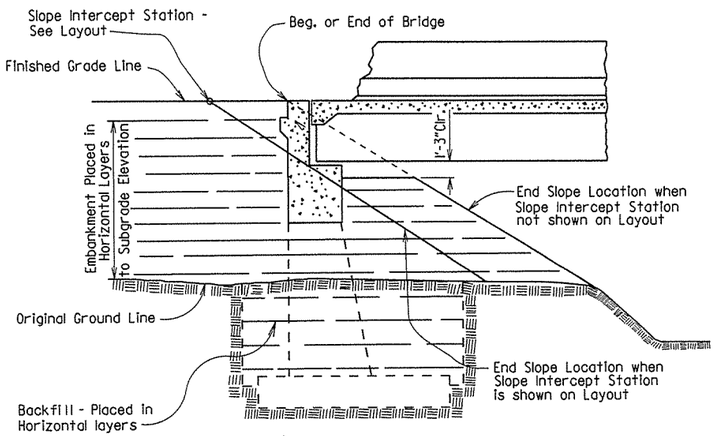

EMBANKMENT CONSTRUCTION AND FOOTING BACKFILL AT SPILL-THROUGH END BENTS

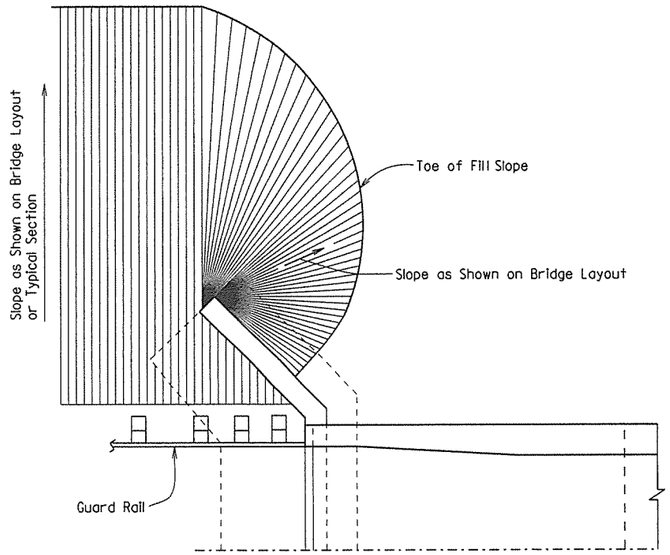

VERTICAL WALL ABUTMENTS

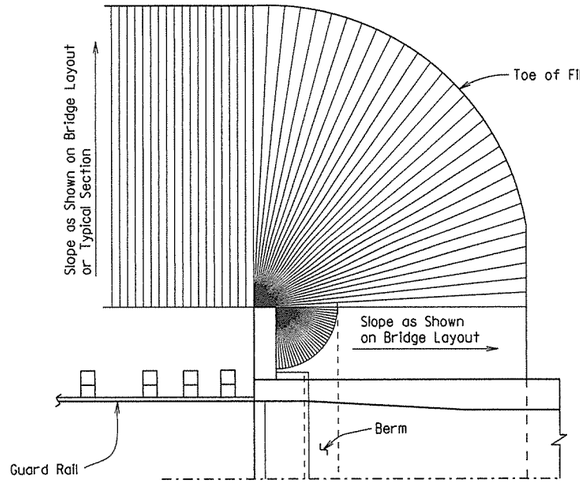

SPILL-THROUGH END BENTS WITH STUB WING

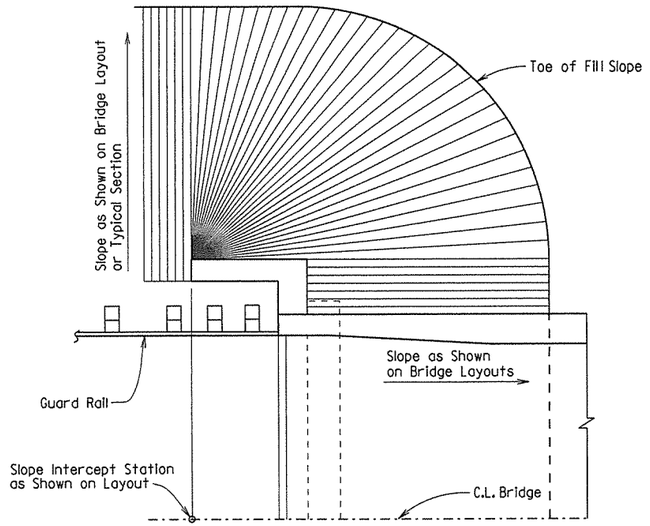

SPILL-THROUGH END BENTS WITH TURNBACK WING

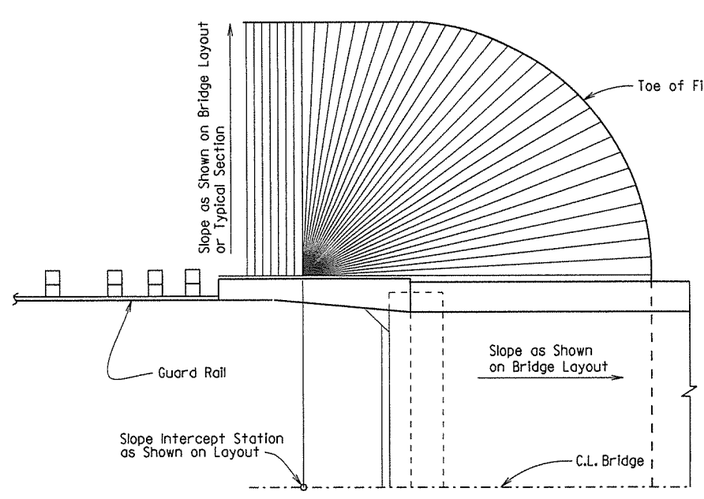

SPILL-THROUGH END BENTS WITH TRANSITION WING

METHOD OF DETERMINING FILL SLOPE LOCATION AT BRIDGE ENDS

GENERAL NOTES

The Bridge End Embankment shall be defined as a section of embankment, not less than 20 feet long adjacent to the bridge end, together with the side slopes and slopes under the bridge end including around the end of wingwalls. Embankment adjacent to structures shall be constructed in 6 inch horizontal layers (loose measure) and compacted by the use of mechanical equipment to the satisfaction of the Engineer. Refer to Subsections 210.09, 210.10 and 801.08 for construction requirements.

STANDARD DETAILS FOR EMBANKMENT CONSTRUCTION AND BACKFILL AT BRIDGE ENDS

ARKANSAS STATE HIGHWAY COMMISSION
LITTLE ROCK, ARK.

DRAWN BY: KDH DATE: 2-27-2014 FILENAME: b55000.dgn
CHECKED BY: BEF DATE: 2-27-2014 SCALE: NO SCALE
DESIGNED BY: STD. DATE: -

DRAWING NO. 55000

DATE REVISED	DATE FILMED	DATE REVISED	DATE FILMED	FED. ROAD DIST. NO.	STATE	FED. AID PROJ. NO.	SHEET NO.	TOTAL SHEETS
				6	ARK.		299	
				JOB NO.				
				1	RIPRAP & EXCAV. 55001			

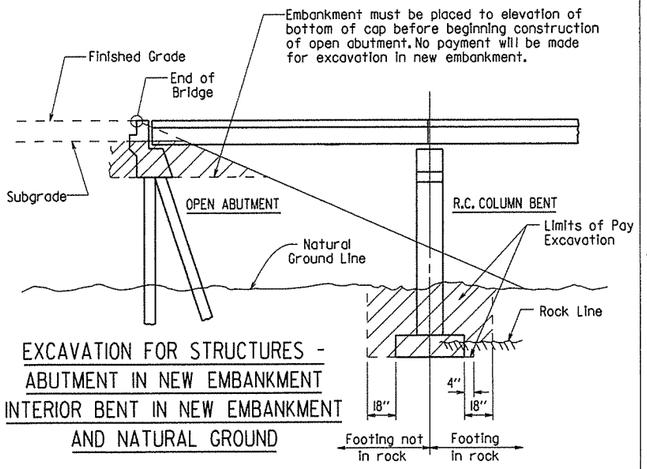

EXCAVATION FOR STRUCTURES - ABUTMENT IN NEW EMBANKMENT INTERIOR BENT IN NEW EMBANKMENT AND NATURAL GROUND

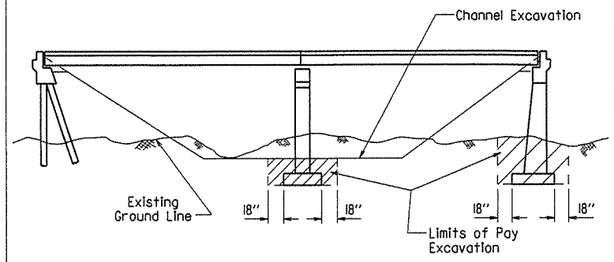

EXCAVATION FOR STRUCTURES - BRIDGE LOCATION WITH DESIGNATED CHANNEL CHANGE

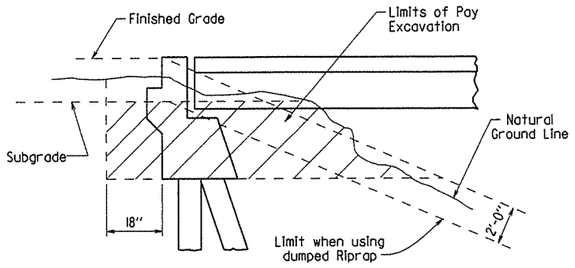

EXCAVATION FOR STRUCTURES - ABUTMENT IN NATURAL GROUND

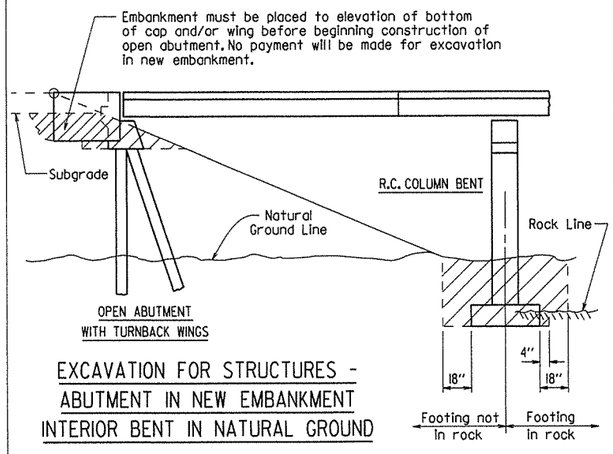

EXCAVATION FOR STRUCTURES - ABUTMENT IN NEW EMBANKMENT INTERIOR BENT IN NATURAL GROUND

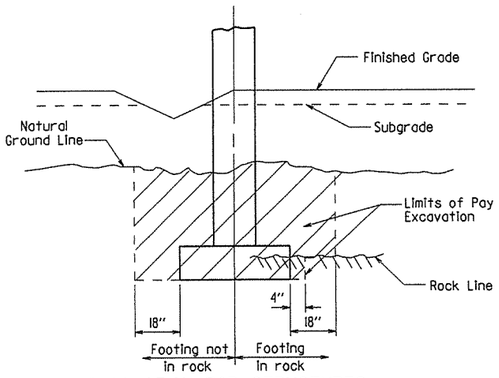

EXCAVATION FOR STRUCTURES - BENT IN ROADWAY FILL SECTION AND NATURAL GROUND

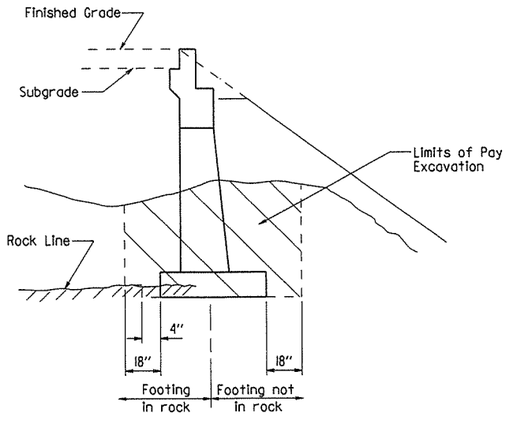

EXCAVATION FOR STRUCTURES - ABUTMENT IN NATURAL GROUND AND NEW EMBANKMENT

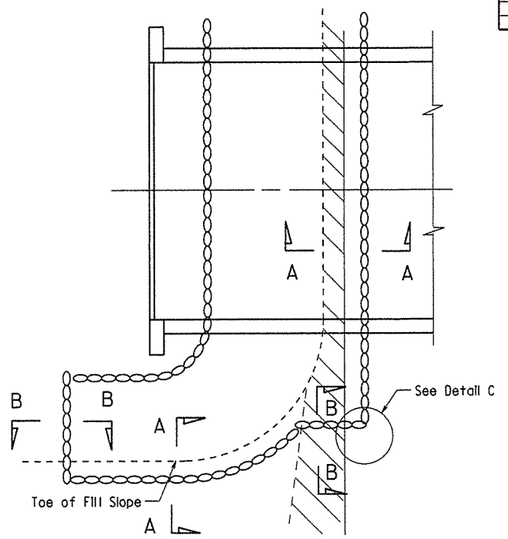

PLAN OF DUMPED RIPRAP

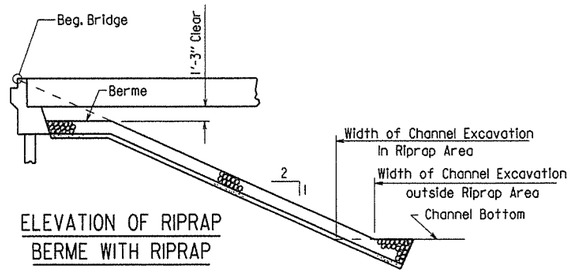

ELEVATION OF RIPRAP BERME WITH RIPRAP

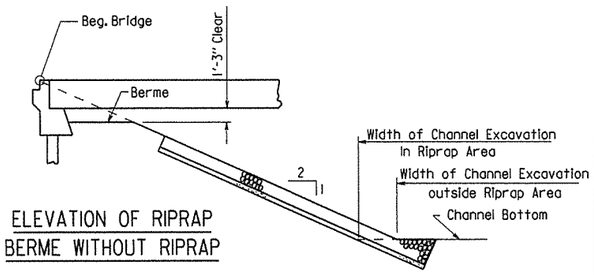

ELEVATION OF RIPRAP BERME WITHOUT RIPRAP

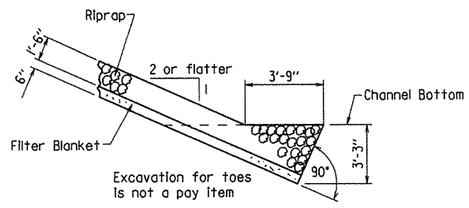

SECTION A-A
(Toe Excavation in Soil)

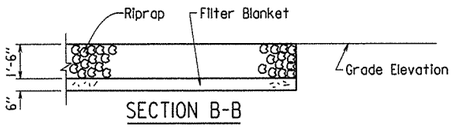

SECTION B-B

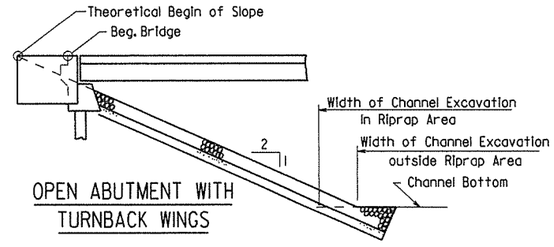

OPEN ABUTMENT WITH TURNBACK WINGS

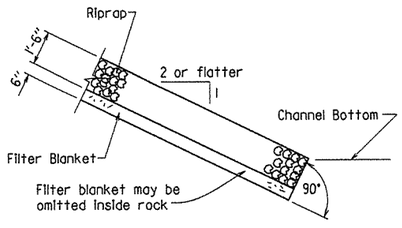

SECTION A-A
(Toe Excavation in Rock)

Note : Use this type of toe when rock is encountered which is in a stable condition.

Note : In lieu of an aggregate filter blanket, a synthetic fiber geotextile fabric complying with the requirements of Subsection 816.02(e) may be used.

Note : Details for computing excavation for structures are included for information as to how plan quantities were calculated and for use when adjusting quantities when changing footing elevation.

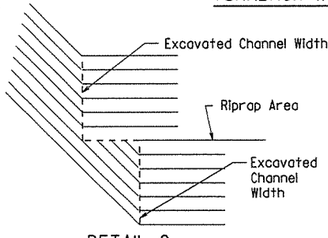

DETAIL C

STANDARD DETAILS FOR DUMPED RIPRAP AND FILTER BLANKET AND COMPUTING EXCAVATION FOR STRUCTURES

ARKANSAS STATE HIGHWAY COMMISSION

LITTLE ROCK, ARK.

DRAWN BY: KDH DATE: 2-27-2014 FILENAME: b55001.dgn

CHECKED BY: BEF DATE: 2-27-2014 SCALE: NO SCALE

DESIGNED BY: STD. DATE:

DRAWING NO. 55001

DATE REVISED	DATE FILMED	DATE REVISED	DATE FILMED	FED. ROAD DIST. NO.	STATE	FED. AID PROJ. NO.	SHEET NO.	TOTAL SHEETS
				6	ARK.		300	
				JOB NO.				

① CONCRETE RIPRAP 55002

Note:
Sloped surfaces of concrete riprap to be marked off into blocks (construction joints optional) with an approved grooving tool, spacing the grooved lines about 5' apart.

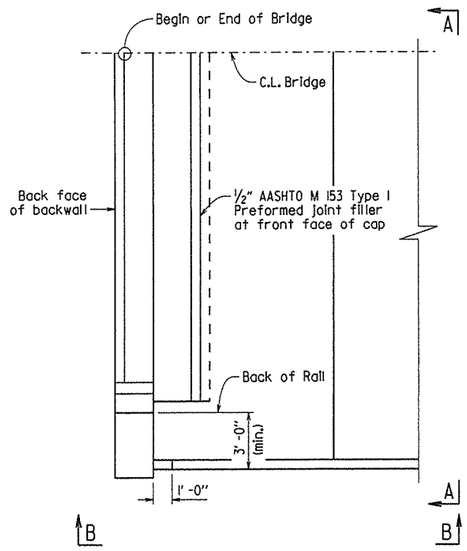

PLAN OF CONCRETE RIPRAP
PERPENDICULAR TO WING
¼" = 1'-0"

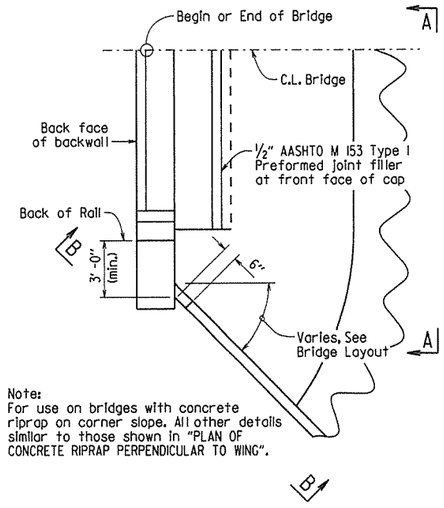

Note:
For use on bridges with concrete riprap on corner slope. All other details similar to those shown in "PLAN OF CONCRETE RIPRAP PERPENDICULAR TO WING".

PLAN OF CONCRETE RIPRAP
AT ANGLE TO WING
¼" = 1'-0"

Note:
For use on bridges with turned back wings. All other details similar to those shown in "PLAN OF CONCRETE RIPRAP PERPENDICULAR TO WING".

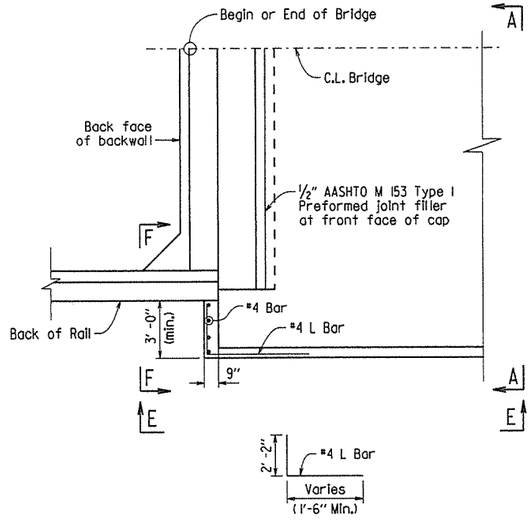

PLAN OF CONCRETE RIPRAP
PERPENDICULAR TO TURNED BACK WING
¼" = 1'-0"

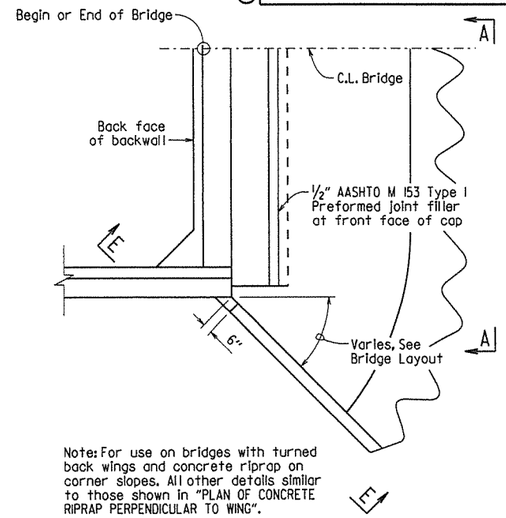

Note: For use on bridges with turned back wings and concrete riprap on corner slopes. All other details similar to those shown in "PLAN OF CONCRETE RIPRAP PERPENDICULAR TO WING".

PLAN OF CONCRETE RIPRAP
AT ANGLE FROM TURNED BACK WING
¼" = 1'-0"

Note:
Wing is shown perpendicular to concrete riprap. Details are similar when wing is at an angle to riprap.

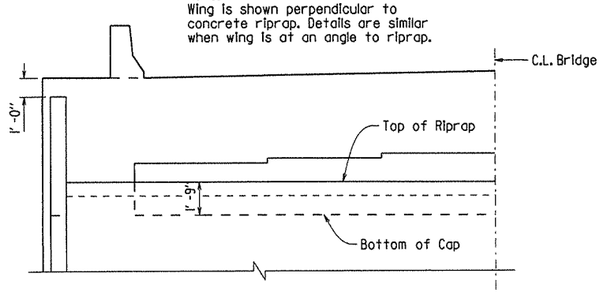

VIEW A-A
¼" = 1'-0"

① Match slope of Riprap Apron.

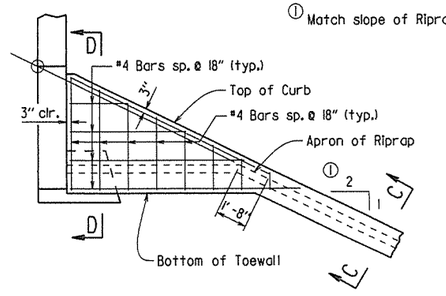

VIEW B-B
¼" = 1'-0"

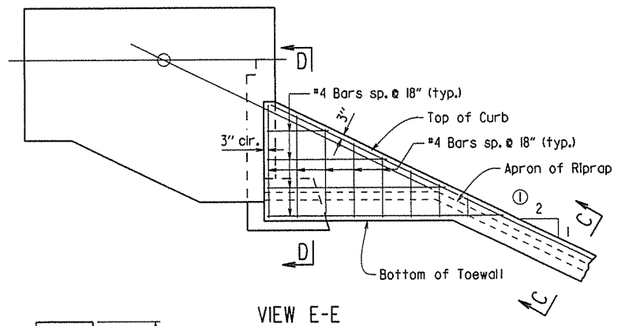

VIEW E-E
¼" = 1'-0"

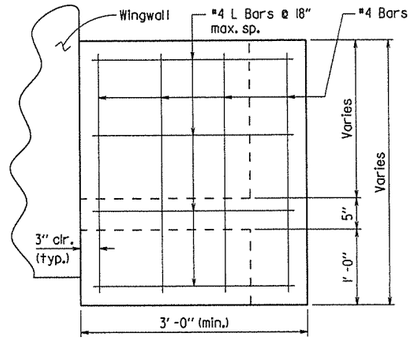

VIEW F-F
1" = 1'-0"

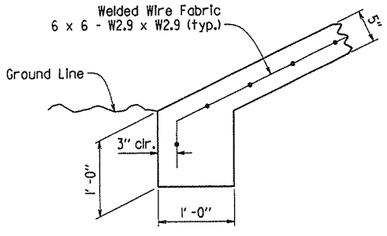

TOE OF CONCRETE RIPRAP
1" = 1'-0"

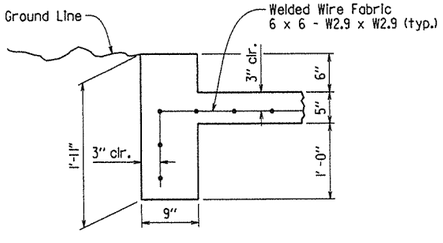

SECTION C-C
1" = 1'-0"

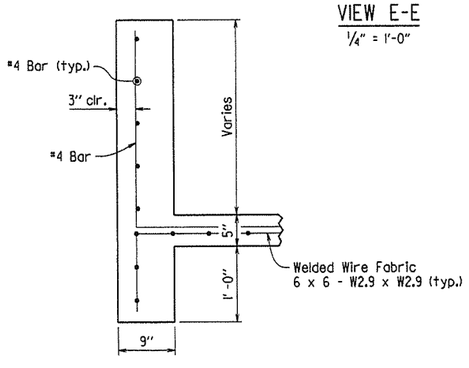

SECTION D-D
1" = 1'-0"

GENERAL NOTES

All concrete shall be Class A with a minimum compressive strength, f'c = 2,100 psi.

Welded wire fabric shall conform to AASHTO M55 or M221.

STANDARD DETAILS FOR CONCRETE RIPRAP

ARKANSAS STATE HIGHWAY COMMISSION

LITTLE ROCK, ARK.

DRAWN BY: ACP DATE: 2/27/2014 FILENAME: b55002.dgn
CHECKED BY: BEF DATE: 2/27/2014 SCALE: AS SHOWN
DESIGNED BY: Std. DATE: ---

DRAWING NO. 55002

DATE REVISED	DATE FILMED	DATE REVISED	DATE FILMED	FED. ROAD DIST. NO.	STATE	FED. AID PROJ. NO.	SHEET NO.	TOTAL SHEETS
				6	ARK.		30	
				JOB NO.				
				①	BRIDGE DECK FORMS		55005	

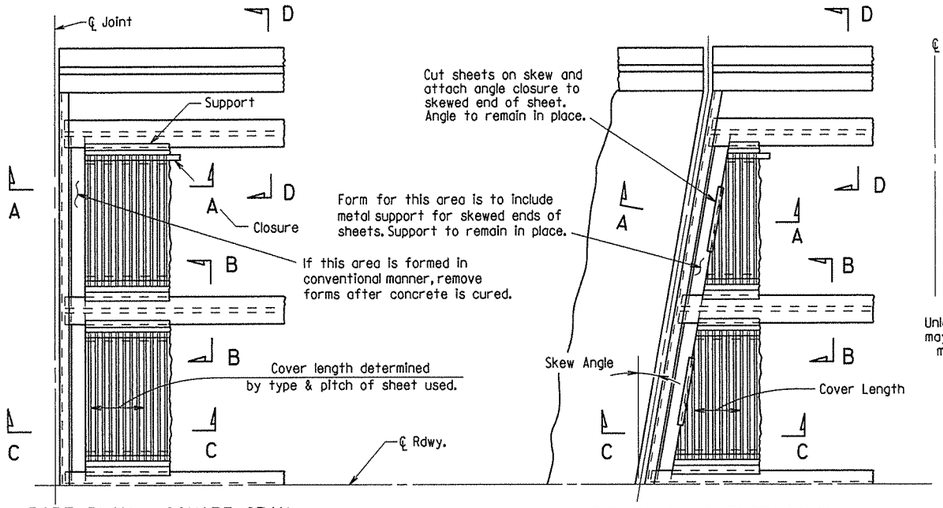

PART PLAN - SQUARE SPAN

3/8" = 1'-0"

PART PLAN - SKEWED SPAN

3/8" = 1'-0"

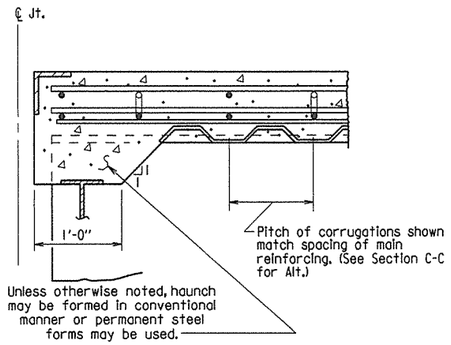

SECTION A-A

N.T.S.

(Angle at end of span)

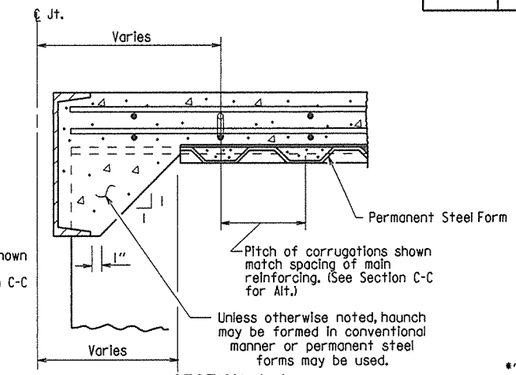

SECTION A-A

N.T.S.

(Channel at end of span)

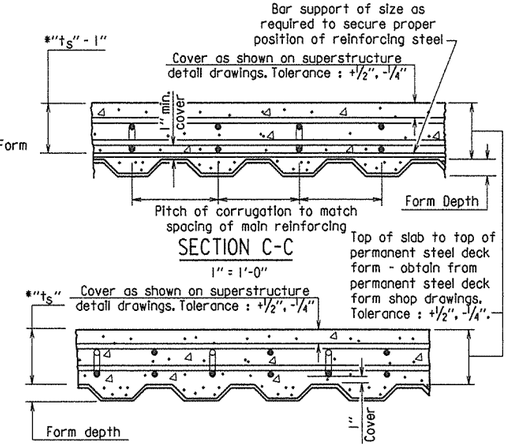

SECTION C-C

1" = 1'-0"

SECTION C-C - ALTERNATE

1" = 1'-0"

(Applicable when corrugations do not match spacing of main reinforcement)

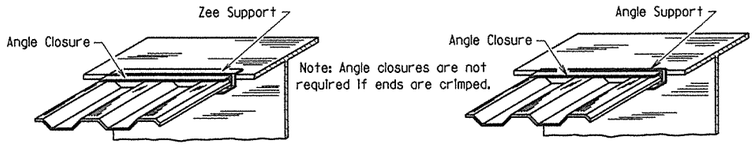

SKETCH OF PERMISSIBLE SUPPORTS

N.T.S.

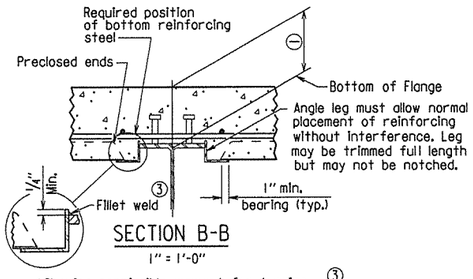

SECTION B-B

1" = 1'-0"

(Showing permissible support for tension flange where shear connectors are used, and for all compression flanges)

③ Minimum weld: 1/8" x 1' ℄ 18". More weld may be required; maximum length per weld = 1 1/2" (typ.)

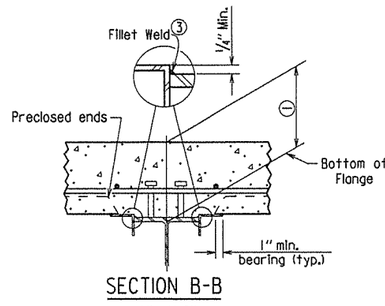

SECTION B-B

1" = 1'-0"

(Showing permissible support for tension flange where shear connectors are used and for all compression flanges)

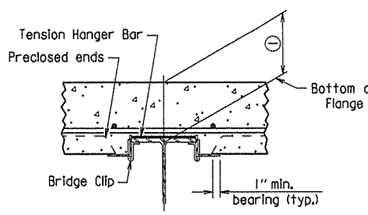

SECTION B-B

1" = 1'-0"

(Showing permissible support for tension flange where shear connectors are not used)

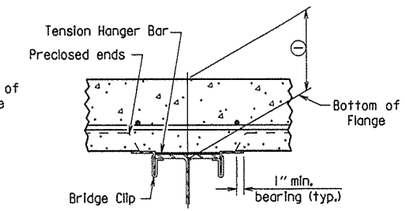

SECTION B-B

1" = 1'-0"

(Showing permissible support for tension flange where shear connectors are not used)

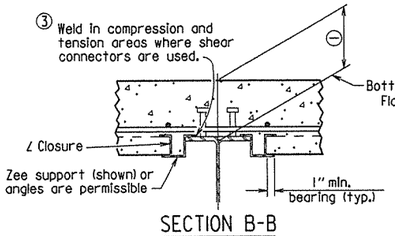

SECTION B-B

1" = 1'-0"

(Showing ∠ Closure)

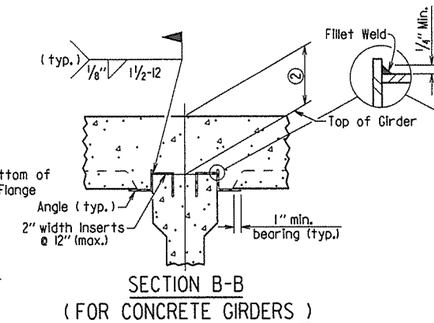

SECTION B-B

(FOR CONCRETE GIRDERS)

1" = 1'-0"

(Showing support by insert cast in girder)

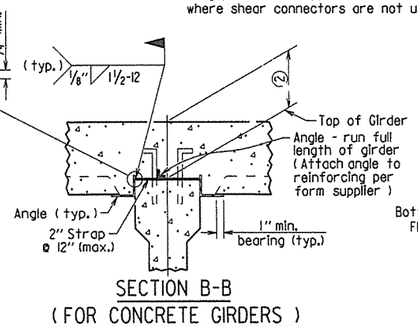

SECTION B-B

(FOR CONCRETE GIRDERS)

1" = 1'-0"

(Showing support by Strap)

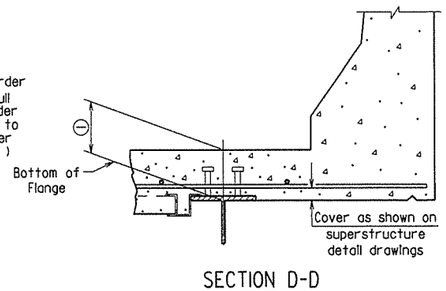

SECTION D-D

1" = 1'-0"

Note: Only Bottom Reinforcing is shown.

① Distance from top of slab to bottom of top flange as measured at centerline girder and as shown on superstructure detail drawings. This dimension may vary within the following limits to maintain the grade and slab thickness tolerances : Minimum - occurs when either the top flange or the support angle leg contacts the bottom reinforcing steel; Maximum = t_s + 1 3/4" + flange thickness. See Section C-C for slab thickness tolerance between adjacent girder flanges.

② Distance from top of slab to top of girder as measured at centerline girder and as shown on superstructure detail drawings. This dimension may vary within the following limits to maintain the grade and slab thickness tolerances : Minimum - occurs when either the top of girder or the support angle leg contacts the bottom reinforcing steel; Maximum - value shown on the superstructure detail drawings when removable forms are used. See Section C-C for slab thickness tolerance between adjacent girder flanges.

*t_s = slab thickness as shown on superstructure detail drawings.

GENERAL NOTES

Permanent steel deck forms may be used at the Contractor's option and shall be at no additional cost to the Department. Such use may result in changes to the dead load deflection of the girder. Any cost for adjustments due to a change in the dead load deflection will be borne by the Contractor. Payment for deck concrete and structural steel will not be increased due to use of permanent steel deck forms.

Permanent steel deck forms shall conform to Subsection 802.14(b). Detailed plans, including detailed calculations and manufacturer's technical brochure, shall be submitted to and approved by the Engineer before work of forming the bridge deck is started.

Welding of form supports to the tension flange of steel girders will be permitted only in areas where shear connectors are used. When welding is not allowed, the method of fastening Z or ∠ supports to the flange must be approved by the Engineer.

Form sheets shall be fastened to supporting members and to each other with galvanized metal screws sufficient in size and number to provide a secure attachment. Alternate methods of attachment must be approved by the Engineer.

When the pitch of form corrugations match the reinforcing spacing, transversely align form sheets across the bridge to maintain the correct orientation of continuous reinforcing bars in the corrugations.

Bar support rods, when used, shall be sized and spaced to adequately support the bottom reinforcing mat at the required position.

High chairs shall be sized to support the top mat of reinforcing at the proper position. High chairs shall be placed at locations shown on the detail drawings.

Specifications: Arkansas State Highway and Transportation Department Standard Specifications for Highway Construction (2014 Edition), with applicable Supplemental Specifications and Special Provisions.

STANDARD DETAILS FOR PERMANENT STEEL BRIDGE DECK FORMS FOR STEEL & CONCRETE GIRDER SPANS

ARKANSAS STATE HIGHWAY COMMISSION

LITTLE ROCK, ARK.

DRAWN BY: KDH DATE: 2-27-2014 FILENAME: b55005.dgn

CHECKED BY: BEF DATE: 2-27-2014 SCALE: NONE

DESIGNED BY: STD. DATE: —

DRAWING NO. 55005

DATE REVISED	DATE FILMED	DATE REVISED	DATE FILMED	FED. ROAD DIST. NO.	STATE	FED. AID PROJ. NO.	SHEET NO.	TOTAL SHEETS
				6	ARK.		302	
				JOB NO.				

(1) TYPE D NAME PLATE 55010

The name of the bridge as shown on the plans shall be placed on Lines 1 - 3 using 1/8" raised letters and numerals 3/8" high.

	Example 1	Example 2	Example 3	Example 4
Line 1	Red River	Southern	Saline	
Line 2	Relief	Railroad	River	Highway 5
Line 3		Overpass	Relief	

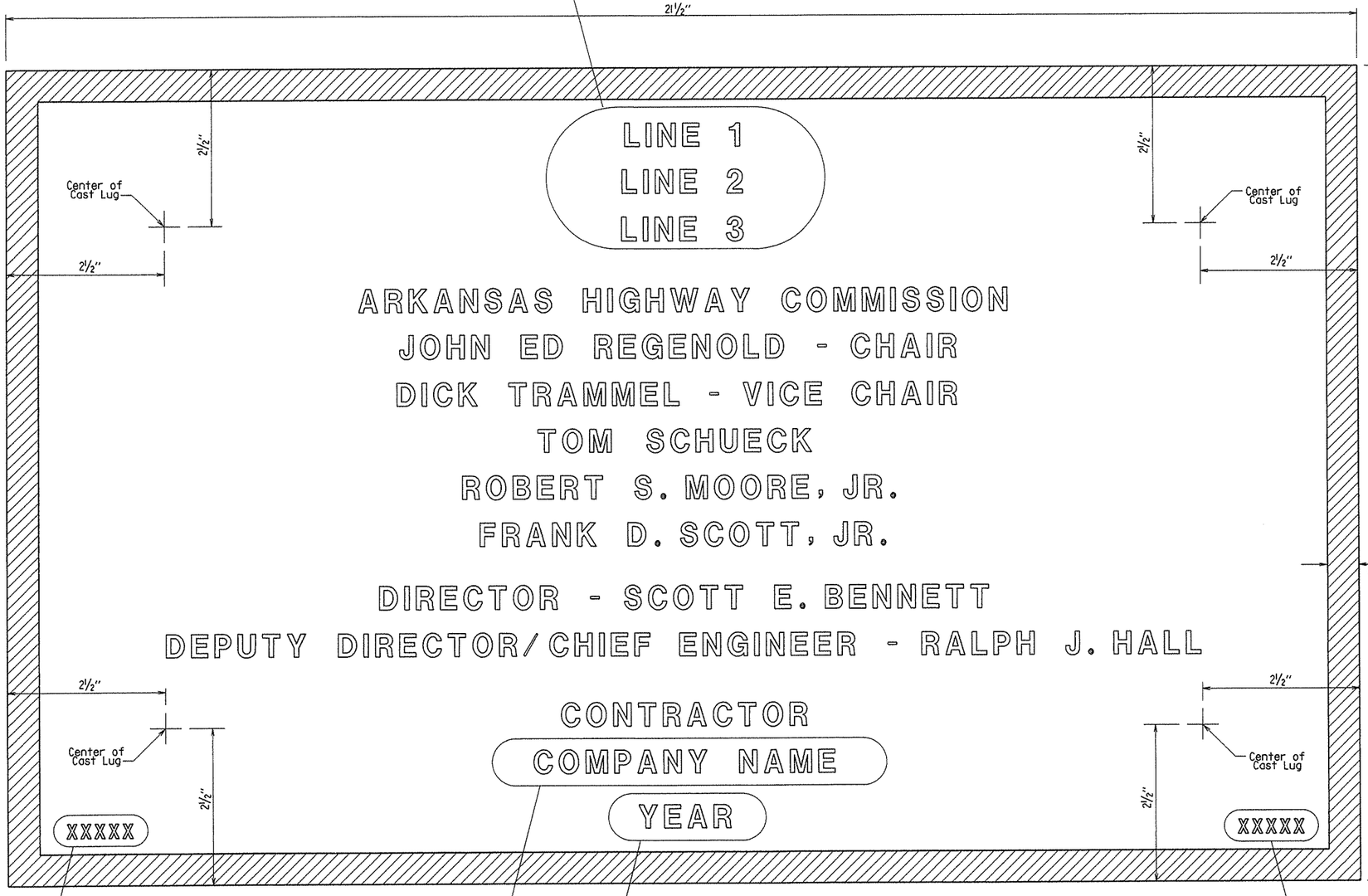

Place the design live loading here using 1/8" raised letters and numerals 1/4" high. Examples : HS 20
HL-93

Place the Year in which Contract was awarded here using 1/8" raised numerals 3/8" high. Example : 2001

Place the name of the company awarded the construction contract here using 1/8" raised letters and numerals 3/8" high. Example : ABCD CONSTRUCTION, INC.

Place the Bridge number here using 1/8" raised letters and numerals 1/4" high. Examples : A1234
05432

TYPICAL BRIDGE NAME PLATE

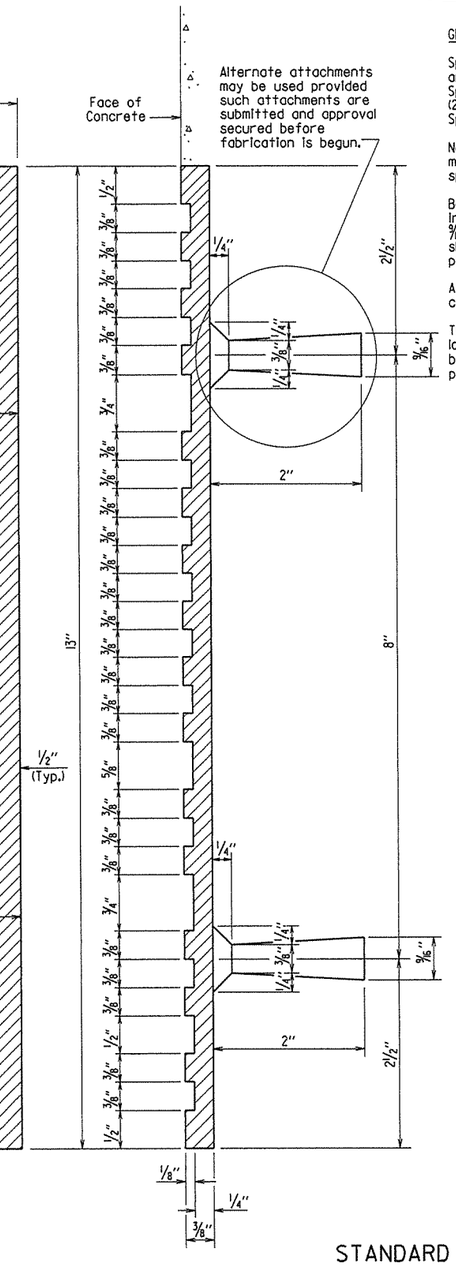

GENERAL NOTES

Specifications: Arkansas State Highway and Transportation Department Standard Specifications for Highway Construction, (2014 Edition) with applicable Supplemental Specifications and Special Provisions.

Name plates shall be cast bronze and shall meet the material requirements as specified in Section 812.

Body of plate shall be 1/4" thick and shall include four tapering cone lugs 3/8" to 9/16"x 2" long. The border and all lettering shall be raised 1/8" above the face of plate and shall be polished.

All lettering shall be plain gothic, square cut and not tapered.

The number of plates required and the location and name on the plate for each bridge shall be as designated on the plans.

STANDARD DETAILS FOR
TYPE D BRIDGE NAME PLATE

ARKANSAS STATE HIGHWAY COMMISSION
LITTLE ROCK, ARK.

DRAWN BY: KDH DATE: 2-27-2014 FILENAME: b55010.dgn
CHECKED BY: BEF DATE: 2-27-2014 SCALE: NO SCALE
DESIGNED BY: STD. DATE: —

DRAWING NO. 55010

DATE REVISED	DATE FILMED	DATE REVISED	DATE FILMED	FED. ROAD DIST. NO.	STATE	FED. AID PROJ. NO.	SHEET NO.	TOTAL SHEETS
				6	ARK.		303	
				JOB NO.				
				①	TYPE C GUTTERS			55030C

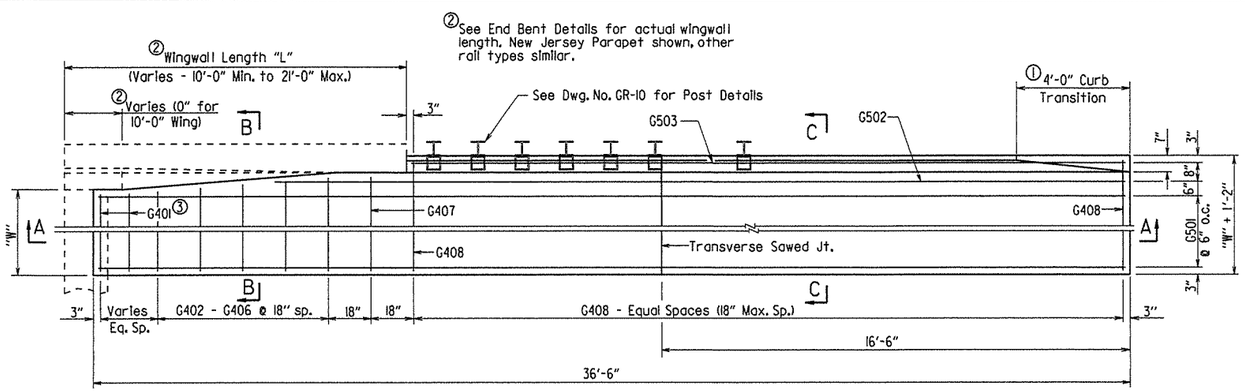

③Provide G401 bars @ 18" max. spacing. Number of G401 bars vary with wingwall length. No G401 bars required for 10'-0" wingwalls.

HALF PLAN OF APPROACH GUTTERS FOR SQUARE BRIDGE

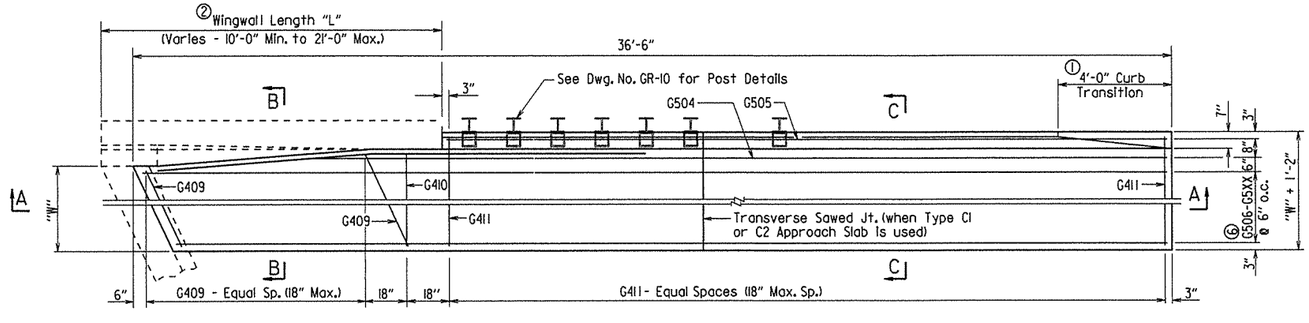

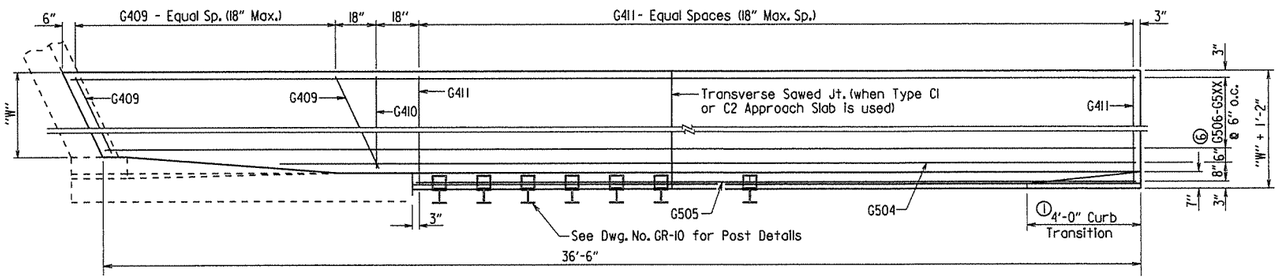

PLAN OF APPROACH GUTTERS FOR SKEWED BRIDGE

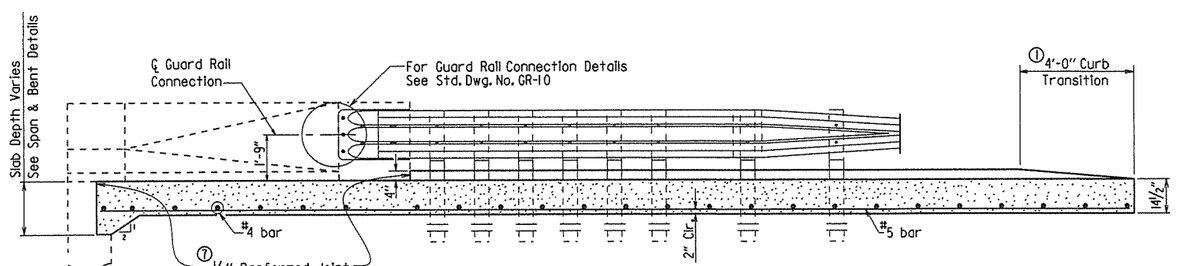

SECTION A-A

①Construct gutter curb with height-transition as shown if drop inlet is not placed at end of gutter.

Construct gutter curb full height (no height-transition) if drop inlet is placed at end of gutter. Curb height transition placed on drop inlet. See drop inlet details.

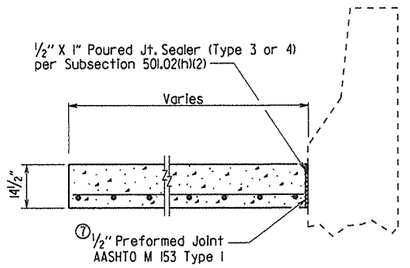

SECTION B-B
N.T.S.

BAR LIST FOR ONE TYPE C GUTTER

	Mark	No. Req'd. for Width "W" 4'-0"	6'-0"	8'-0"	10'-0"	Length
Square Bridge	G401	④	④	④	④	"W"- 4"
	G402-G406	1 each	1 each	1 each	1 each	"W"-3" to "W"+2"
	G407	1	1	1	1	"W"+3"
	G408	④	④	④	④	"W"+ 10"
	G501	8	12	16	20	36'-2"
	G502	1	1	1	1	(41'-11") - "L"
	G503	1	1	1	1	(37'-2") - "L"
Skewed Bridge	G409	④	④	④	④	⑤
	G410	1	1	1	1	"W"+3"
	G411	④	④	④	④	"W"+ 10"
	G504	1	1	1	1	⑤
	G505	1	1	1	1	⑤
	G506-G5XX ⑥	1 each	1 each	1 each	1 each	⑤

④No. Req'd. varies with Skew and Wingwall Length.

⑤Bar Lengths vary with Skew and Wingwall Length.

⑥G513 for "W" = 4'
G517 for "W" = 6'
G521 for "W" = 8'
G525 for "W" = 10'

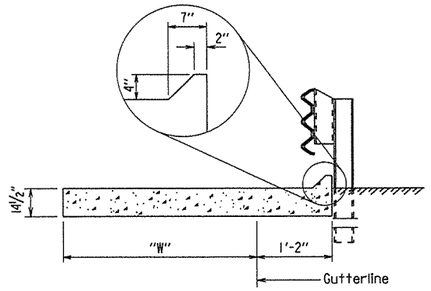

SECTION C-C
N.T.S.

QUANTITIES FOR ONE SQUARE APPROACH GUTTER
(FOR INFORMATION ONLY)

"W" Width (ft.)	Reinforcing Steel (Lbs.)	Concrete (Cu. Yds.)
4	445	8.30
6	630	11.55
8	810	14.80
10	995	18.10

Quantities are based on "L" = 10'-0".

Note:
All longitudinal lines within the limits of horizontal curves shall be on curves concentric to C.L. Bridge. Adjustment to longitudinal bar lengths may be required. Transverse reinforcing shall be placed on radial lines to C.L. Bridge.

⑦Eliminate Type I Preformed Joint at end bent backwall and at face of wingwalls when gutters used with Type C2 Approach Slabs. Poured joint sealer is required, however backer rod shall be eliminated.

GENERAL NOTES

All concrete shall be Class S or Class S(AE) or mixture used for Portland Cement Concrete Pavement and shall be poured in the dry.

All reinforcing steel shall be Grade 60 (yield strength = 60,000 psi) conforming to AASHTO M 31 or M 322, Type A, with mill test reports.

Approach Gutters will be measured and paid for in accordance with Section 504.

STANDARD DETAILS FOR TYPE C APPROACH GUTTERS

ARKANSAS STATE HIGHWAY COMMISSION

LITTLE ROCK, ARK.

DRAWN BY: A.M.S. DATE: 2/27/2014
CHECKED BY: K.W.Y. DATE: 2/27/2014
DESIGNED BY: STD. DATE:

FILENAME: b55030c.dgn
SCALE: ⅜" = 1'-0" or As Shown

DRAWING NO. 55030C

REFER TO TABULATION OF QUANTITIES FOR "W" & "B" DIMENSIONS

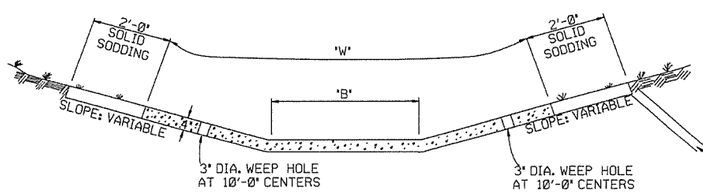

TYPE A

EXCAVATE TO NEAT LINES TO CONSTRUCT DITCH PAVING AND SOLID SODDING.

REFER TO TABULATION OF QUANTITIES FOR "W" DIMENSIONS

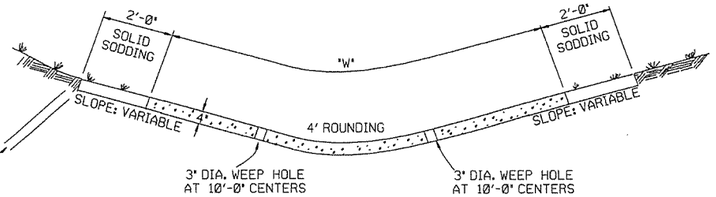

TYPE B

THE STEEL AND ADDITIONAL CONCRETE FOR THE WALLS SHALL NOT BE PAID FOR DIRECTLY, BUT SHALL BE CONSIDERED TO BE INCLUDED IN THE PRICE BID FOR "CONCRETE DITCH PAVING."

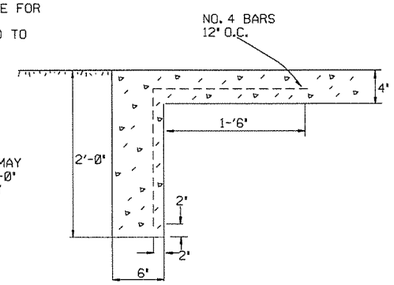

TOE WALL DEPTH MAY BE ALTERED TO 1'-0" WHEN DIRECTED BY THE ENGINEER IN ROCK EXCAVATION

TOE WALL DETAIL FOR CONCRETE DITCH PAVING

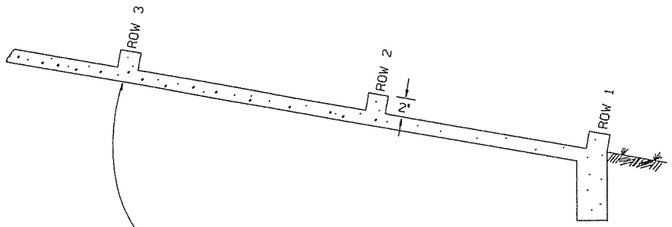

NUMBER OF ELEMENTS PER ROW VARIES WITH WIDTH OF PAVING SPECIFIED

ENERGY DISSIPATORS TO BE USED FOR THE ENTIRE LENGTH OF DITCH WHEN SLOPE OF DITCH PAVING EXCEEDS 7%. THE DISSIPATORS WILL NOT BE PAID FOR DIRECTLY, BUT SHALL BE CONSIDERED TO BE UNCLUDED IN THE PRICE BID FOR CONCRETE DITCH PAVING.

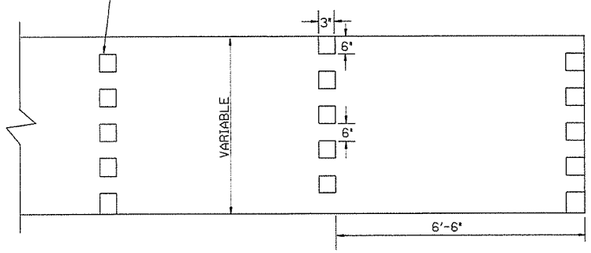

ENERGY DISSIPATORS
(NO SCALE)

GENERAL NOTES:

THE FULL WIDTH OF EACH SECTION SHALL BE POURED MONOLITHICALLY.

TOE WALLS TO BE CONSTRUCTED FULL WIDTH AT EACH END OF DITCH PAVING, AND POURED MONOLITHICALLY.

SOLID SOD ALONG DITCH PAVING TO BE PLACED WITHIN 14 DAYS OF DITCH PAVING CONSTRUCTION.

1" WIDE TRANSVERSE EXPANSION JOINTS SHALL BE PLACED IN CONCRETE DITCH PAVING AT 45' INTERVALS. THE SPACE SHALL BE FILLED WITH APPROVED JOINT FILLER COMPLYING WITH AASHTO M213.

DATE	REVISION	DATE FILM'D
11-17-10	ADDED GENERAL NOTE	
6-2-94	ADDED GENERAL NOTE ABOUT SOLID SODDING	
11-30-8	ELIMINATED MIN. ROWS OF ELEMENTS	111-30-89
7-15-88	REVISED DISSIPATOR NOTE	653-7-15-88
4-3-87	REVISED ENERGY DISSIPATOR	671-4-3-87
1-9-87	MODIFIED NOTE ON ENERGY DISS.	532-1-9-87
11-3-86	ADDED NOTE TO ENERGY DISS.	599-12-1-86
11-1-84	ENERGY DISSIPATOR DETAILS ADDED	508-11-1-84
11-1-84	EXCAVATION DETAILS ADDED TYPED A & B	
10-2-72	REVISED AND REDRAWN	508-10-2-72

ARKANSAS STATE HIGHWAY COMMISSION

CONCRETE DITCH PAVING

STANDARD DRAWING CDP-1

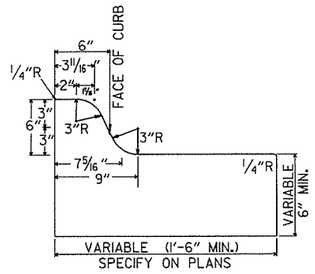

TYPE A

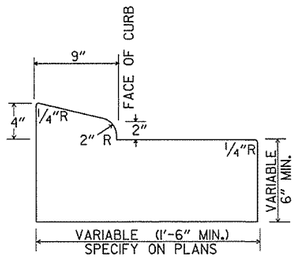

TYPE B-I

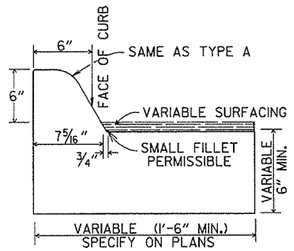

TYPE C

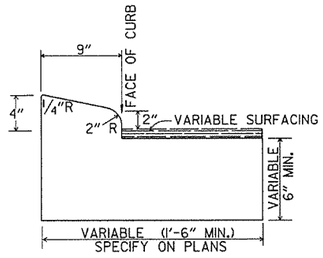

TYPE B-2

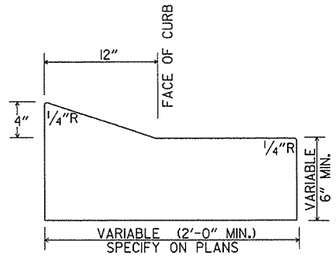

TYPE E-1

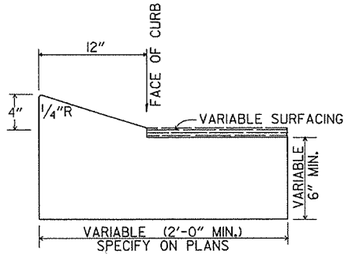

TYPE E-2

CONCRETE COMBINATION CURB AND GUTTER

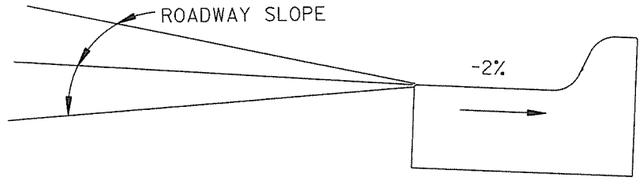

DETAIL OF GUTTER SLOPE

GUTTER SHALL BE CONSTRUCTED ON 2% SLOPE AWAY FROM ROADWAY, REGARDLESS OF ROADWAY SLOPE.

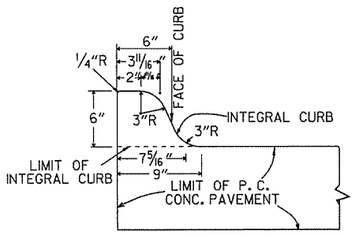

TYPE A

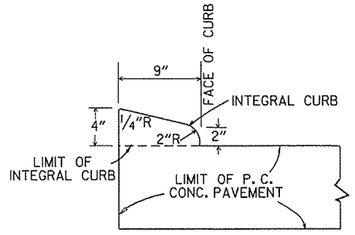

TYPE B

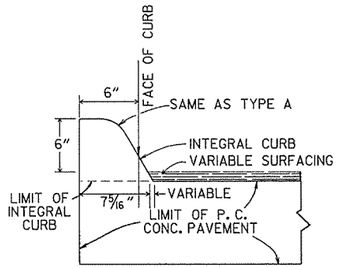

TYPE C

INTEGRAL CURB

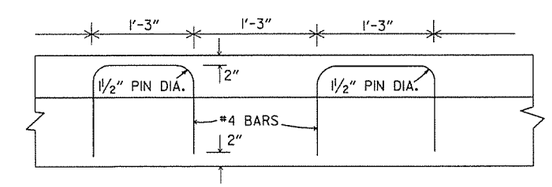

ALTERNATE CONSTRUCTION METHOD FOR INTEGRAL CURB

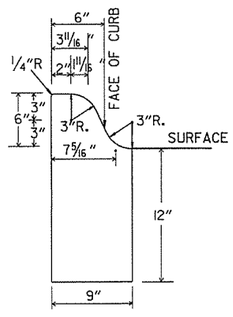

TYPE A

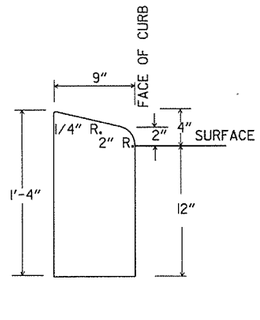

TYPE B

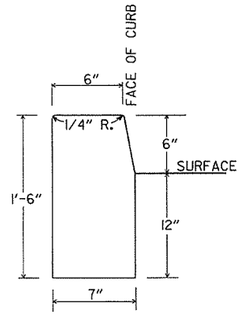

TYPE D

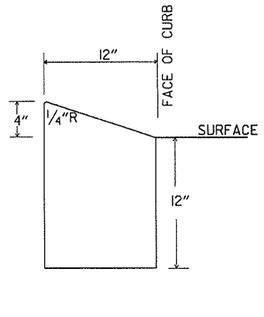

TYPE E

CONCRETE CURB

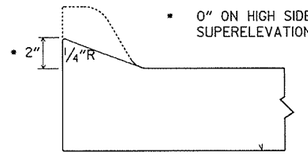

NOTE: USE MODIFIED CURB AS SPECIFIED ON STD. DR-1. COMPENSATION FOR MODIFIED CURB WILL BE CONSIDERED INCLUDED IN THE PRICE BID FOR THE TYPE OF CURB OR CURB AND GUTTER SPECIFIED.

DETAILS OF MODIFIED CURB

DATE	REVISION	DATE FILMED
11-29-07	REVISED GUTTER SLOPE & MODIFIED CURB DETAILS	
11-10-05	ADDED DETAILS OF TYPE E CURBS	
11-16-01	REVISED CONCRETE CURB TYPE B	
11-18-98	REVISED MODIFIED CURB	
6-2-94	ADDED NOTE TO SPECIAL MODIFIED CURB	
8-5-93	CORRECTED GUTTER SLOPE	8-5-93
10-1-92	ADDED DETAILS OF GUTTER SLOPE	10-1-92
5-24-90	ADDED DETAILS OF MODIFIED CURB	5-24-90
11-30-89	VARIBLE DEPTH TYPE A & B I	11-30-89
7-15-88	REVISED MODIFIED CURB	630-7-15-88
11-1-73	REVISED MODIFIED CURB	500-11-1-73
10-2-72	REVISED AND REDRAWN	512-10-2-72

ARKANSAS STATE HIGHWAY COMMISSION

CURBING DETAILS

STANDARD DRAWING CG-1

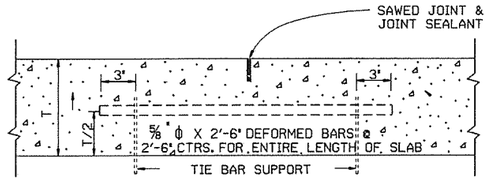

LONGITUDINAL JOINT

NOTE: THE TIE BAR SUPPORT SHOWN ABOVE MAY BE ELIMINATED IF OTHER APPROVED METHODS FOR PLACING AND SUPPORTING THE TIE BARS ARE PROVIDED.
TIE BARS SHALL BE 15' FROM TRANSVERSE JOINTS.

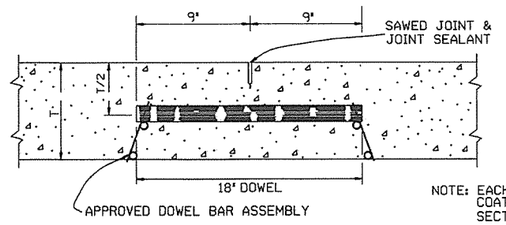

NOTE: EACH DOWEL TO BE COATED ACCORDING TO SECTION 502 OF THE STANDARD SPECIFICATIONS.

ROUND STEEL BAR DOWEL
1¼" DIA. WHEN T<10"
1½" DIA. WHEN T≥10"

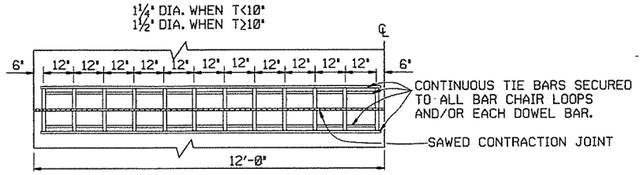

ONE-HALF 24' PAVEMENT
12 DOWELS
PLAN

NOTE: FOR 20' PAVEMENT USE 20 DOWELS @ 12" CTRS. WITH 6" SPACING FROM C.L. AND EDGE OF SLAB TO FIRST BAR. FOR 15' PAVEMENT USE 15 DOWELS @ 12" CTRS. WITH 6" SPACING FROM C.L. AND EDGE OF SLAB TO FIRST BAR. FOR 26' PAVEMENT USE 26 DOWELS @ 12" CTRS. WITH 6" SPACING FROM C.L. AND EDGE OF SLAB TO FIRST BAR. FOR PAVEMENT WIDTHS OTHER THAN THOSE SHOWN ABOVE, USE DOWELS AT 12" CTRS. WITH 6" MAX. SPACING FROM C.L. TO FIRST BAR. DISTANCE FROM EDGE OF SLAB TO FIRST BAR SHALL BE ADJUSTED TO MAINTAIN 12" DOWEL BAR SPACING

CONTRACTION JOINT DETAILS

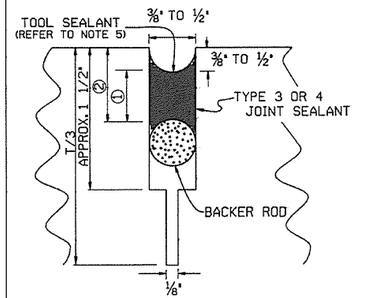

DETAIL OF SAWED CONTRACTION JOINT

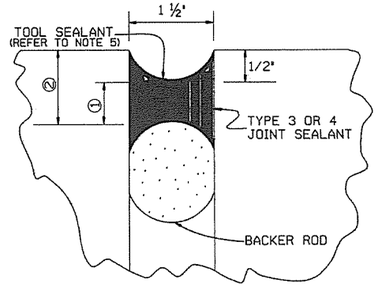

DETAIL OF EXPANSION JOINT

JOINT CONFIGURATION FOR
TYPE 3 OR 4 JOINT SEALANT

JOINT WIDTH	SEALANT THICKNESS ①	BACKER ROD DIAMETER	BACKER ROD PLACEMENT DEPTH ②
INCHES			
¼	¼	⅜	½
⅜	¼	½	½
½	¼	⅝	½
⅝	⅜	¾	⅝
¾	⅜	⅞	⅝
1 ½	¾	2	1 ¼

JOINT CONFIGURATION FOR
TYPE 5 JOINT SEALANT

JOINT WIDTH	SEALANT THICKNESS ①	BACKER ROD DIAMETER	BACKER ROD PLACEMENT DEPTH ②
INCHES			
¼	½	⅜	¾
⅜	¾	½	1

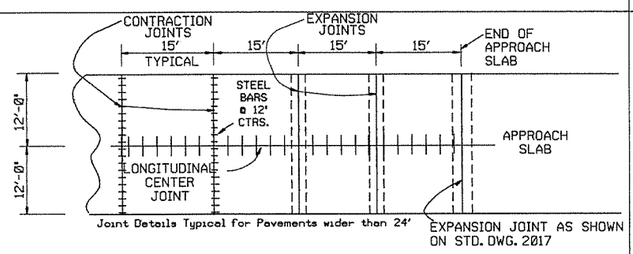

PLAN SHOWING EXPANSION JOINTS AT
BRIDGE APPROACH SLABS

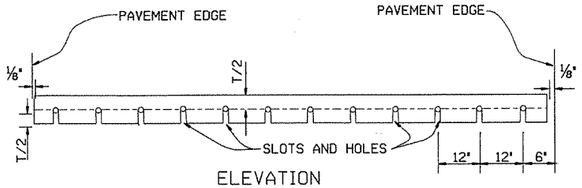

ELEVATION

NOTE: ALL DOWEL BARS SHALL CONFORM TO THE DETAILS FOR CONTRACTION JOINTS.

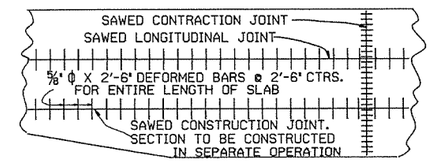

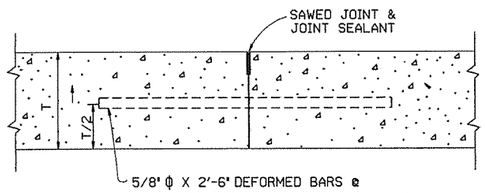

NOTE: TIE BARS SHALL BE 15' FROM TRANSVERSE JOINTS.

LONGITUDINAL CONSTRUCTION JOINT

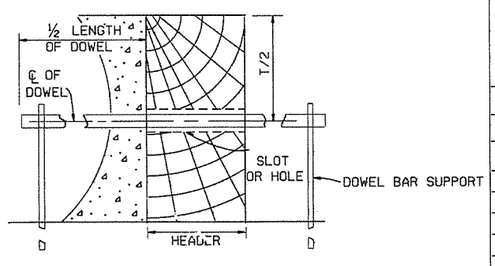

SECTION

TRANSVERSE
CONSTRUCTION JOINT

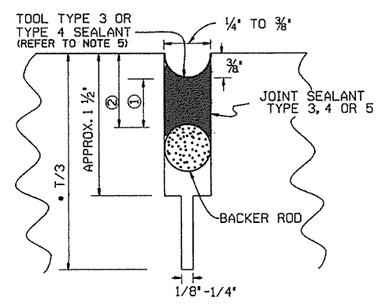

•NOTE: T/3 SAW CUT NOT REQUIRED FOR LONGITUDINAL CONSTRUCTION JOINT.

DETAIL OF SAWED
LONGITUDINAL JOINT
AND LONGITUDINAL CONSTRUCTION JOINT

DATE	REVISION	DATE FILMED
5-25-06	ADDED GENERAL NOTE 7	
10-9-03	REMOVED TIE BAR COATING & REVISED GENERAL NOTES	
11-16-01	ADDED TOOL SEALANT AND NOTE 5; REVISED NOTE 3	
4-26-96	REVISED CONTRACTION JOINT NOTE	
11- 3-94	ADDED NOTE RE: REINF. BARS	
4- 1-93	REVISED DOWEL BARS & GEN. NOTES	4- 1-93
10- 1-92	REVISED DOWEL SPACING	10- 1-92
8- 15-91	ADDED SPAC FOR CONTR JTS & DEL KEYWAY	
05-24-90	REVISED TIE BAR, DOWEL & JOINT SIZE	
01-25-90	ADDED EXPANSION JOINT	01-25-90
11-30-89	CHANGED T/4+1 TO T/3+1	11-30-89
03-23-89	ALTERED SAWED JOINT & ADDED NOTE	512-03-23-89
07-15-88	REVISED AND REDRAWN	632-07-15-88

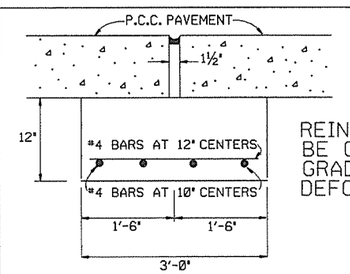

REINFORCING SHALL BE GRADE 40 OR GRADE 60 DEFORMED BARS.

DETAIL OF JOINT SUPPORT
FOR EXPANSION JOINTS

GENERAL NOTES

1. 'T' DENOTES THICKNESS OF SLAB.
2. DOWEL BARS SHALL BE PLACED IN ACCORDANCE WITH THE DIMENSIONS SHOWN. A TOLERANCE OF PLUS OR MINUS ONE INCH WILL BE ALLOWED FOR THE VERTICAL AND LATERAL PLACEMENT AND A TOLERANCE OF PLUS OR MINUS ¼" WILL BE ALLOWED FOR THE TILT AND SKEW. DOWEL BARS SHALL BE FIELD COATED FOR A MINIMUM DISTANCE OF 2" GREATER THAN HALF THE LENGTH OF THE BAR WITH AN APPROVED GREASE AS A BOND BREAKER JUST PRIOR TO PLACEMENT OF CONCRETE.
3. THE EXPANSION JOINT SUPPORT MAY BE CONSTRUCTED WITH CLASS 'A', 'S' OR PAVING CONCRETE. PAYMENT FOR THE JOINT SUPPORT SHALL BE FOR THE CONTRACT UNIT PRICE BID FOR THE CLASS OF CONCRETE SPECIFIED IN THE PLANS. PAYMENT FOR ALL OTHER WORK AND MATERIALS REQUIRED FOR THE CONSTRUCTION OF THE JOINT SUPPORT SHALL BE INCLUDED IN THE PRICE BID FOR THE ABOVE ITEMS.
4. CONTRACTION JOINTS SHALL BE CONSTRUCTED ON 15' CENTERS.
5. TOOLING NOT REQUIRED FOR SELF-LEVELING SILICONE.
6. UNLESS OTHERWISE SPECIFIED IN THE PLANS, CONCRETE SHOULDERS SHALL BE CONSTRUCTED ACCORDING TO THE DETAILS SHOWN HEREON. CONTRACTION JOINTS SHALL MATCH CONTRACTION JOINTS IN THE LANES.
7. TIE WIRES IN DOWEL BAR ASSEMBLIES SHALL NOT BE CUT PRIOR TO PLACEMENT OF PAVING CONCRETE.

ARKANSAS STATE HIGHWAY COMMISSION

TRANSVERSE & LONGITUDINAL JOINTS
FOR CONCRETE PAVEMENT (NON-REINFORCED)

STANDARD DRAWING CPTJ - 6A

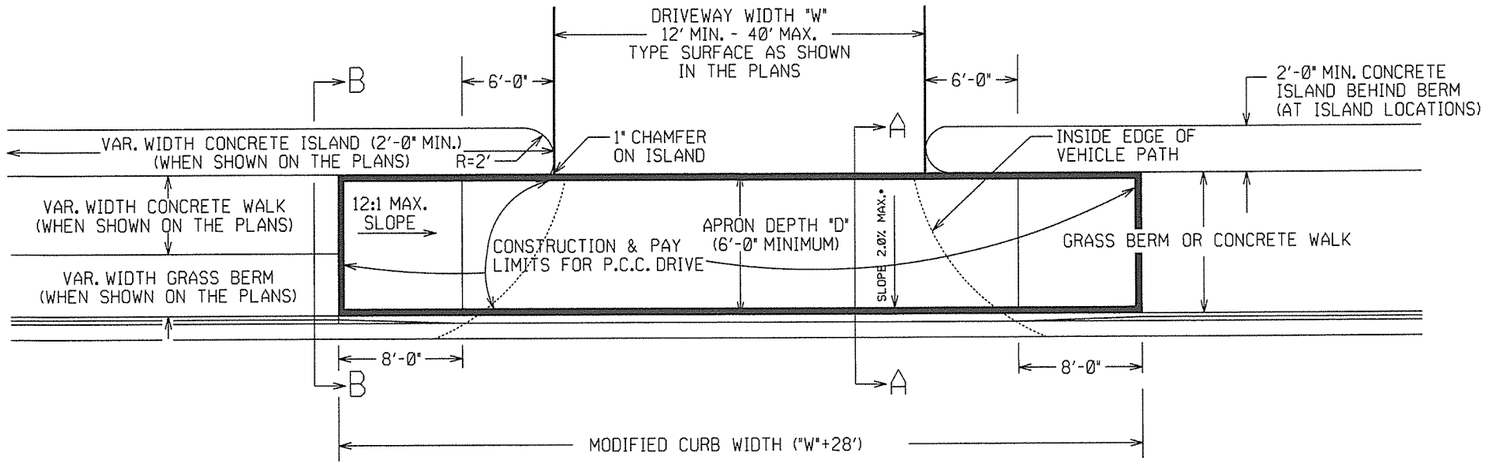

PLAN VIEW

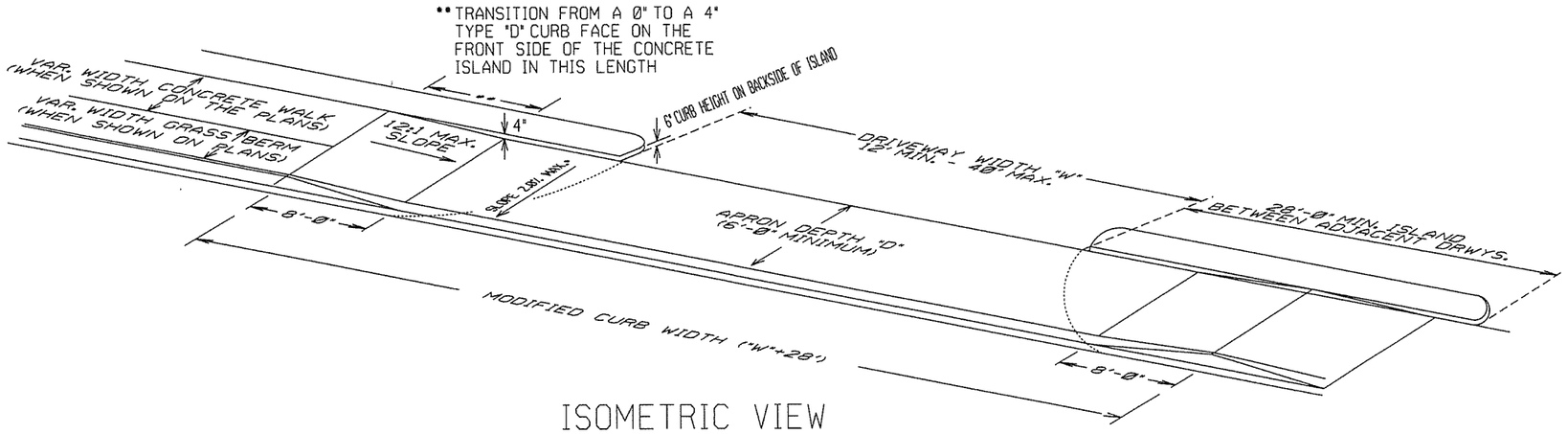

ISOMETRIC VIEW

REFER TO PLANS FOR TYPE OF CURB FACE TO BE USED. NO DIRECT PAYMENT WILL BE MADE FOR THE CURB FACES SHOWN ON THE ISLAND DETAILS. PAYMENT FOR THE CURB FACE WILL BE INCLUDED IN THE UNIT PRICE BID FOR THE ITEM "CONCRETE ISLAND".

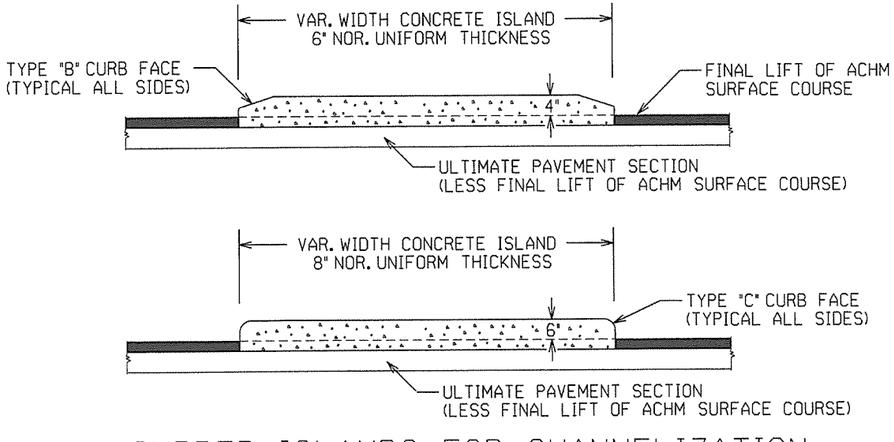

CURBED ISLANDS FOR CHANNELIZATION

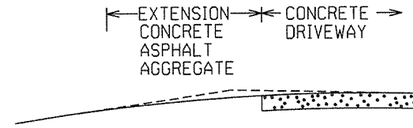

EXTENSION TYPICAL SECTIONS

1: CONCRETE - 6" P.C. CONCRETE DRIVEWAY

2: ASPHALT - 2" ACHM SURFACE COURSE (1/2")
4" ACHM BINDER COURSE.(1") OR
4" ACHM BASE COURSE (1-1/2")

3: ASPHALT - 2" ACHM SURFACE COURSE (1/2")
7" AGGREGATE BASE COURSE

4: AGGREGATE - 6" AGGREGATE BASE COURSE

THE TYPE OF EXTENSION SHALL BE AS SHOWN IN THE PLANS. THE CONTRACTOR MAY, WITH THE APPROVAL OF THE ENGINEER, SUBSTITUTE A LOWER NUMBERED TYPE OF EXTENSION IN LIEU OF THE TYPE SPECIFIED IN THE PLANS, BUT AT NO ADDITIONAL COST TO THE DEPARTMENT.

DRIVEWAY EXTENSION DETAILS

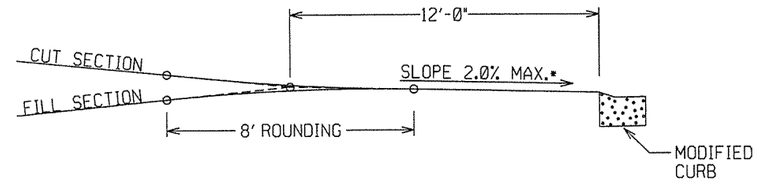

DRIVEWAY VERTICAL ALIGNMENT DETAILS

* NOTE: DRIVEWAYS MAY NOT BE SLOPED AWAY FROM THE ROADWAY UNLESS APPROVED BY THE ENGINEER.

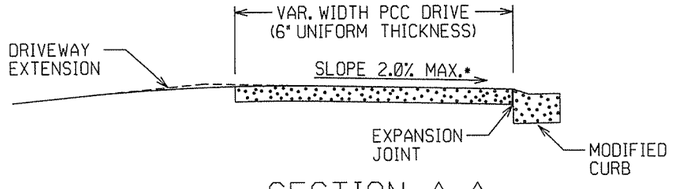

SECTION A-A

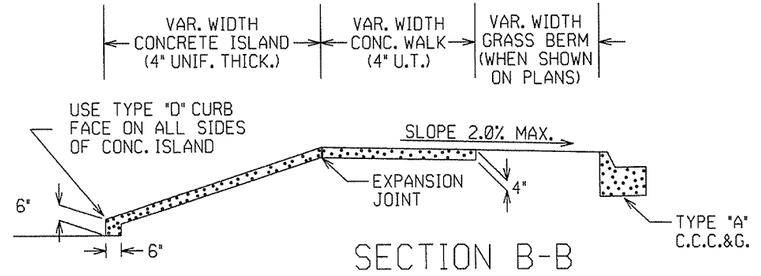

SECTION B-B
CURBED ISLAND BEHIND WALK

DATE REV	DATE FILMED	DESCRIPTION
2-27-14		REVISED PLAN & ISOMETRIC VIEW
11-29-07		ADDED CHANNELIZATION ISLAND WITH TYPE C CURB FACE & REVISED DRIVEWAY SLOPE NOTE & VERTICAL ALIGNMENT DETAIL
11-10-05		REV. APRON SLOPE & DEPTH OF AGG. BASE.
8-22-02		ADDED ISLAND DETAILS & NOTES
3-30-00		REV. MOD. CURB WIDTH & TRANS. NOTE
11-19-98		REVISED NOTES
11-18-98		REDRAWN AND REISSUED

ARKANSAS STATE HIGHWAY COMMISSION
DETAILS OF DRIVEWAYS & ISLANDS
STANDARD DRAWING DR-1

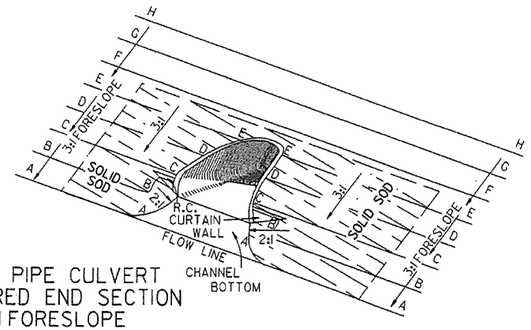

TYPICAL PIPE CULVERT
WITH FLARED END SECTION
& 3:1 FORESLOPE

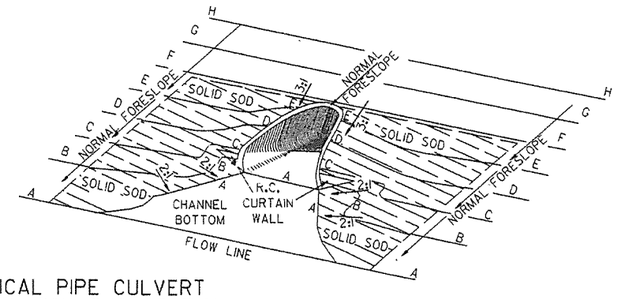

TYPICAL PIPE CULVERT
WITH FLARED END SECTION
& FLATTENED ADJACENT SLOPES

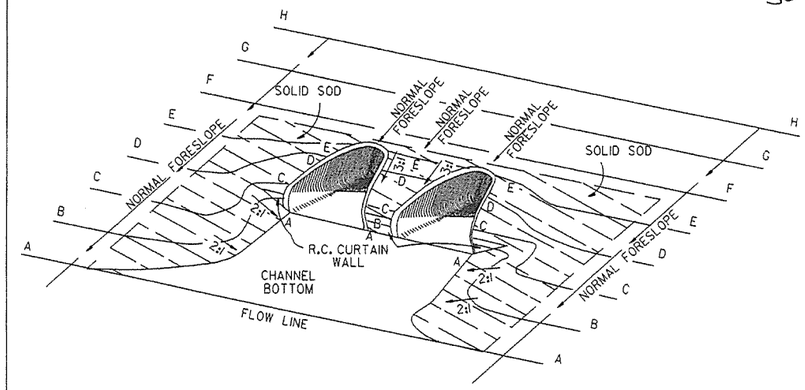

TYPICAL MULTIPLE PIPE CULVERT
WITH FLARED END SECTIONS
& FLATTENED ADJACENT SLOPES

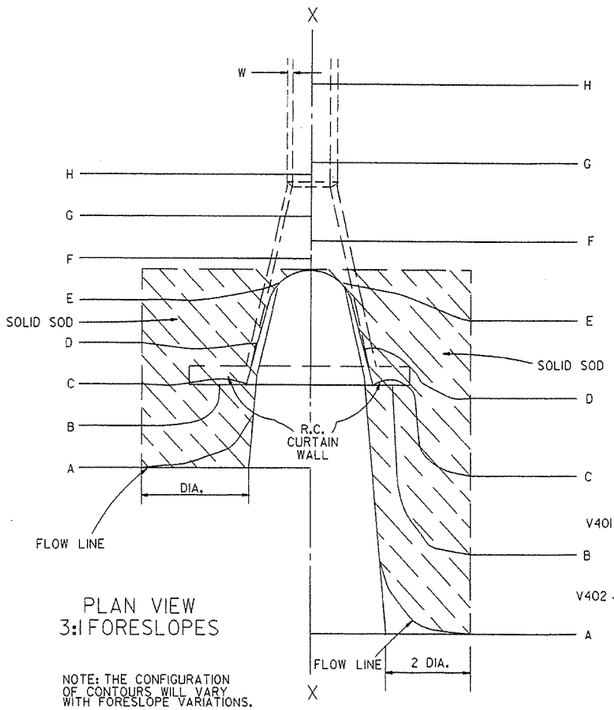

PLAN VIEW
3:1 FORESLOPES

NOTE: THE CONFIGURATION OF CONTOURS WILL VARY WITH FORESLOPE VARIATIONS.

PLAN VIEW
FLATTENED FORESLOPES

R.C. CURTAIN WALL DIMENSIONS & QUANTITIES

PIPE DIA.	H_1	L_1	L	L (DBL.)/2	SINGLE R.C.P.C. CONC.	SINGLE R.C.P.C. REINF. STEEL	DOUBLE R.C.P.C. CONC.	DOUBLE R.C.P.C. REINF. STEEL
					CU. YDS.	LBS.	CU. YDS.	LBS.
18"	1'-11½"	3'-5"	8'-0"	6'-3"	0.31	27.7	0.45	39.5
24"	1'-0½"	4'-6"	9'-6"	7'-6"	0.37	33.4	0.53	48.0
30"	1'-3½"	5'-7"	11'-0"	9'-0"	0.45	39.0	0.67	59.0
36"	1'-7"	6'-8"	13'-0"	10'-6"	0.58	52.6	0.83	73.9
42"	2'-1½"	7'-3"	15'-6"	12'-0"	0.82	77.1	1.10	100.7
48"	2'-5"	7'-10"	17'-0"	13'-0"	0.98	94.9	1.27	120.4
54"	2'-9½"	8'-5"	18'-6"	14'-0"	1.16	115.8	1.47	143.7
60"	3'-4"	9'-0"	20'-6"	15'-6"	1.47	149.7	1.84	180.3
72"	4'-5"	10'-2"	25'-6"	18'-6"	2.31	232.6	2.73	271.0

NOTE: QUANTITIES SHOWN ARE FOR ONE (1) CURTAIN WALL.

REINFORCING STEEL SCHEDULE

PIPE DIA.	SINGLE R.C. PIPE CULVERT H401 L	H401 NO.	H402 L	H402 NO.	V401 L	V401 NO.	V402 L	V402 NO.	DOUBLE R.C. PIPE CULVERT H401 L	H401 NO.	H402 L	H402 NO.	H403 L	H403 NO.	V401 L	V401 NO.	V402 L	V402 NO.
18"	7'-8"	2	1'-11½"	4	1'-7½"	8	8"	8	12'-2"	2	1'-11½"	4	8"	2	1'-7½"	10	8"	14
24"	9'-2"	2	2'-2"	4	1'-8½"	10	8"	9	14'-8"	2	2'-2"	4	8"	2	1'-8½"	12	8"	18
30"	10'-8"	2	2'-4½"	4	1'-11½"	10	8"	12	17'-8"	2	2'-4½"	4	8"	2	1'-11½"	14	8"	22
36"	12'-8"	2	2'-10"	6	2'-3"	12	8"	14	20'-8"	2	2'-10"	6	8"	3	2'-3"	14	8"	28
42"	15'-2"	2	3'-9½"	8	2'-9½"	16	8"	15	23'-8"	2	3'-9½"	8	8"	4	2'-9½"	18	8"	30
48"	16'-8"	2	4'-3"	10	3'-1"	18	8"	16	25'-8"	2	4'-3"	10	8"	5	3'-1"	20	8"	32
54"	18'-2"	2	4'-8½"	12	3'-5½"	20	8"	17	27'-8"	2	4'-9"	12	8"	6	3'-5½"	22	8"	34
60"	20'-2"	2	5'-5"	14	4'-0"	24	8"	18	30'-8"	2	5'-5"	14	8"	7	4'-0"	26	8"	36
72"	25'-2"	2	7'-4"	18	5'-1"	30	8"	20	36'-8"	2	7'-4"	18	8"	9	5'-1"	33	8"	40

ALL REINFORCING STEEL #4 BARS @ 6" O.C.

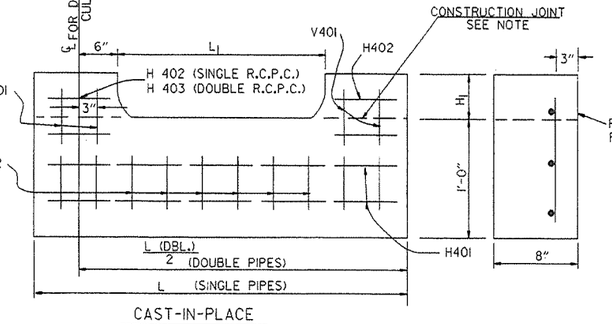

CAST-IN-PLACE

NOTE: THE PORTION OF THE R.C. CURTAIN WALL BENEATH THE FLARED END SECTION (LOWER 1'-0") SHALL BE PLACED MONOLITHICALLY. THE FLARED END SECTION SHALL THEN BE SET IN PLACE & THE REMAINING PORTIONS OF THE R.C. CURTAIN WALL PLACED.

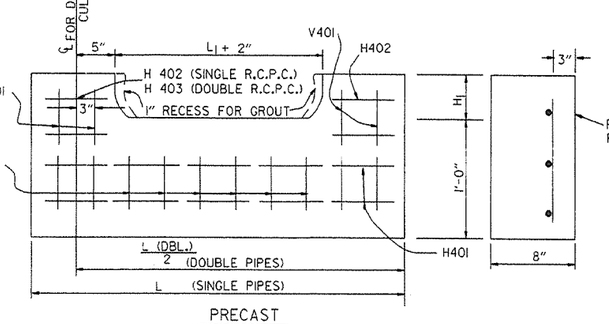

PRECAST

NOTE: THE PRECAST CURTAIN WALL WILL BE SET AND BACKFILLED WITH COMPACTED MATERIAL. THE FLARED END SECTION SHALL THEN BE SET IN PLACE AND THE 1" RECESS FILLED WITH GROUT. WHERE "L" EXCEEDS 11' THE CURTAIN WALL MAY BE CAST IN TWO (2) OR MORE SECTIONS. THE METHOD OF JOINING THE SECTIONS FOR INSTALLATION SHALL BE APPROVED BY THE ENGINEER.

R.C. CURTAIN WALL DETAILS

SOLID SODDING

PIPE DIA.	SINGLE R.C.P.C. 3:1	4:1	6:1	DOUBLE R.C.P.C. 3:1	4:1	6:1
	SQ. YDS.			SQ. YDS.		
18"	5	7	12	6	8	13
24"	8	12	19	9	13	20
30"	13	18	29	14	19	30
36"	17	26	41	18	28	43
42"	23	35	55	25	37	57
48"	29	46	68	31	48	70
54"	35	57	85	37	59	87
60"	45	62	104	48	65	107
72"	64	92	156	67	95	159

NOTE: QUANTITIES SHOWN ABOVE ARE FOR ONE (1) END OF F.E.S.

GENERAL NOTES

1. A CAST-IN-PLACE OR PRECAST CURTAIN WALL MAY BE USED. PAYMENT FOR THE CURTAIN WALL SHALL BE CONSIDERED TO BE INCLUDED IN THE UNIT PRICE BID EACH FOR FLARED END SECTIONS OF THE SEVERAL SIZES, WHICH PRICE SHALL BE FULL COMPENSATION FOR FURNISHING ALL MATERIALS INCLUDING REINFORCING STEEL AND CONCRETE; FOR FORMS, MIXING AND PLACING; FOR EXCAVATION AND BACKFILL, AND FOR ALL LABOR, TOOLS, EQUIPMENT AND INCIDENTALS NECESSARY TO COMPLETE THE WORK.
2. ALL EXPOSED EDGES SHALL BE CHAMFERED ¾".
3. CONCRETE FOR CURTAIN WALL SHALL MEET THE REQUIREMENTS FOR CLASS A OR S CONCRETE AS PROVIDED IN SECTION 802 OF THE STANDARD SPECIFICATIONS OR FOR PAVING CONCRETE AS PROVIDED IN SECTION 501 OF THE STANDARD SPECIFICATIONS.
4. WELDED WIRE MESH 3 x 3 W10 x W10 MAY BE USED IN LIEU OF REINFORCING BARS.

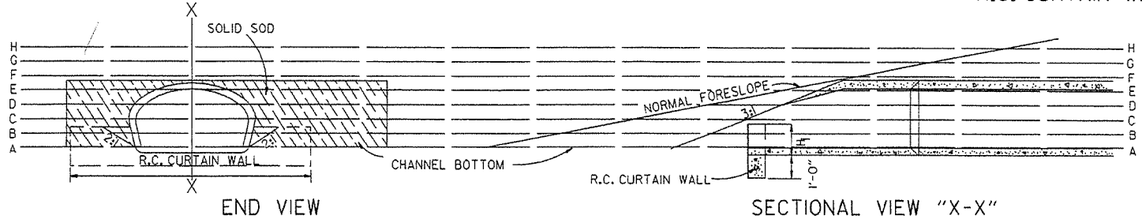

END VIEW

SECTIONAL VIEW "X-X"

DATE	REVISION	FILMED
10-18-96	ADDED NOTE TO SOLID SODDING	10-18-96
10-12-95	CORRECTED SPELLING	
11- 3-94	ADDED GENERAL NOTE NO. 4	
8-15-91	REV. CURTAIN WALL QUANT. STEEL SCH. & SOLID SOD QUANT.	
3-2-81	ALLOW PRECAST IN 2 OR MORE PIECES CHAMFER EDGES	
5-15-80	ADDED PRECAST WALL & GENERAL NOTES	
10-2-72	REVISED AND REDRAWN	

ARKANSAS STATE HIGHWAY COMMISSION

FLARED END SECTION

STANDARD DRAWING FES-1

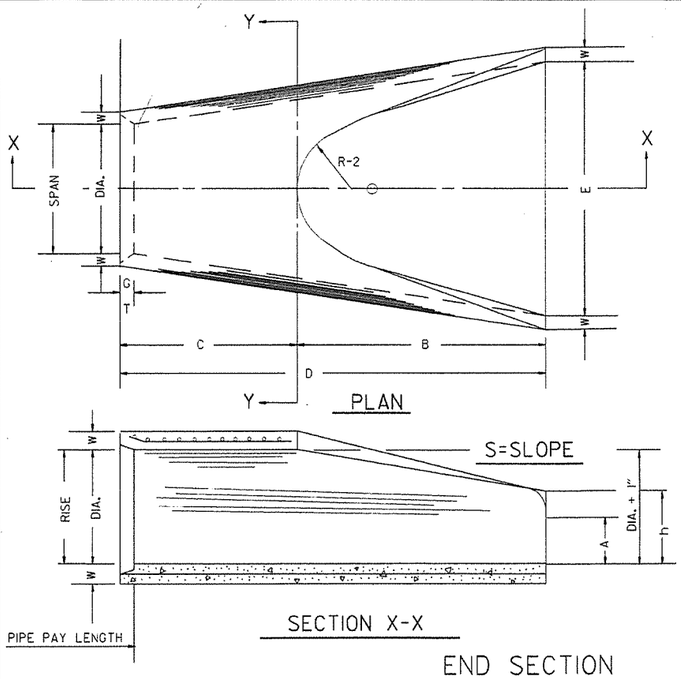

END SECTION
FOR REINFORCED CONCRETE PIPE CULVERTS

TABLE OF DIMENSIONS

DIA.	WALL	A	B	C	D	E	S	DIA. ± 1"	P	R-1	R-2	G-T	WT.	h
18"	2½"	9"	2'-3"	3'-10"	6'-1"	3'-0"	3:1	19"	29"	15½"	12"	2"	1000	1'-0½"
24"	3"	9½"	3'-7½"	2'-6"	6'-11½"	4'-0"	3:1	25"	33 3/16"	16 11/16"	14"	2½"	1600	1'-1½"
30"	3½"	1'-0"	4'-6"	1'-7¾"	6'-1¾"	5'-0"	3:1	31"	37"	18½"	15"	3¼"	1940	1'-4⅝"
36"	4"	1'-3"	5'-3"	2'-10¾"	8'-1¾"	6'-0"	3:1	37"	47 11/16"	24 5/16"	20"	3½"	4100	1'-8"
42"	4½"	1'-9"	5'-3"	2'-11"	8'-2"	6'-6"	3:1	43"	53⅞"	27½"	22"	3½"	5380	2'-2½"
48"	5"	2'-0"	6'-0"	2'-2"	8'-2"	7'-0"	3:1	49"	56½"	28½"	22"	3½"	6550	2'-6"
54"	5½"	2'-4"	6'-6"	1'-10"	8'-4"	7'-6"	3:1	55"	65½"	33⅛"	24"	4"	8750	2'-10½"
60"	6"	2'-10"	6'-6"	1'-10"	8'-4"	8'-0"	3:1	61"	72½"	36 11/16"	24"	4"	9270	3'-5"
72"	7"	3'-10"	6'-6"	1'-10"	8'-4"	9'-0"	3:1	73"	77 11/16"	38 5/16"	24"	5"	13250	4'-6"

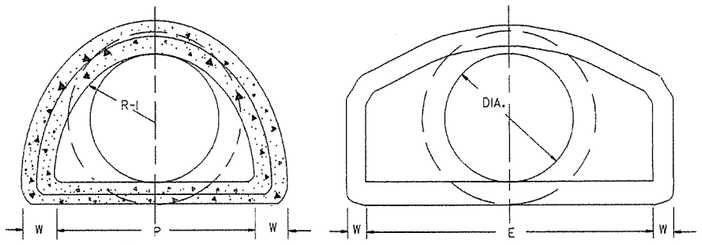

NOTE: TONGUE END ON UPSTREAM SECTION
GROOVE END ON DOWNSTREAM SECTION

ARCH PIPE

EQUIV. DIA.	• SPAN AASHTO M 206	• SPAN AHD NOMINAL	• RISE AASHTO M 206	• RISE AHD NOMINAL	W	A	B	C	D	E	P	R2	G-T	S
	INCHES													
15	18	18	11	11	2"	4"	2'-0"	4'-0"	6'-0"	3'-0"	29"	12"	1½"	2½:1
18	22	22	13½	14	2½"	5"	2'-0"	4'-1"	6'-1"	3'-6"	32⅛"	13"	2½"	2½:1
21	26	26	15½	16	2¾"	7"	2'-3"	3'-10"	6'-1"	4'-0"	34⅛"	14"	2½"	2½:1
24	28½	29	18	18	3"	9"	2'-3"	3'-10"	6'-1"	5'-0"	36 11/16"	15"	2½"	2½:1
30	36¼	36	22½	23	3½"	10"	3'-1"	3'-0½"	6'-1½"	6'-0"	47 11/16"	20"	3"	2½:1
36	43¾	44	26⅝	27	4"	10½"	4'-0"	2'-1½"	6'-1½"	6'-6"	54⅜"	22"	3½"	2½:1
42	51⅛	51	31 9/16	31	4½"	11½"	4'-7"	1-10¼"	6'-5¼"	7'-2"	59½"	23"	3¾"	2½:1
48	58½	59	36	36	5"	1'-3"	5'-3"	2'-10¾"	8'-1¼"	7'-10"	70 5/16"	24"	4¼"	2½:1
54	65	65	40	40	5½"	1'-7"	5'-3"	2'-11"	8'-2"	8'-6"	72 1/16"	24"	4¾"	2¼:1
60	73	73	45	45	6"	1'-10"	5'-6"	2'-8"	8'-2"	9'-0"	77 11/16"	24"	5"	2¼:1

• THE MEASURED SPAN AND RISE SHALL NOT VARY MORE THAN ± 2 PER CENT FROM THE VALUES SPECIFIED BY AASHTO M 206.

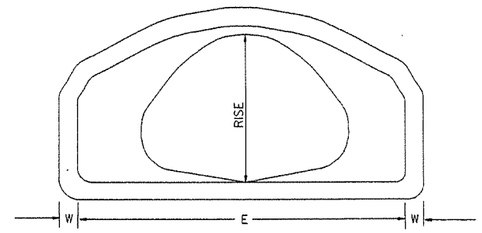

END VIEW
CONCRETE ARCH PIPE

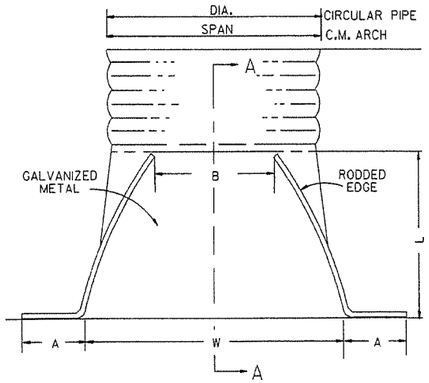

NOTE: ALTERNATE CONNECTIONS TO THE PIPE CULVERTS, IN ACCORDANCE WITH MANUFACTURER'S STANDARD PRACTICES, MAY BE MADE SUBJECT TO THE APPROVAL OF THE ENGINEER.

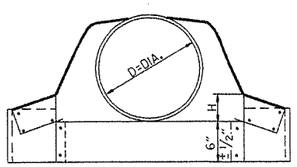

CIRCULAR PIPE

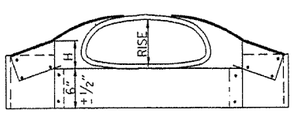

C.M. ARCH PIPE

CIRCULAR PIPE

D. DIA.	GAUGE	A 1" ±	B. MAX.	H 1" ±	L 1½" ±	W 2" ±	S
		INCHES					
12	16	6	6	6	21	24	2½:1
15	16	7	8	6	26	30	2½:1
18	16	8	10	6	31	36	2½:1
21	16	9	12	6	36	42	2½:1
24	16	10	13	6	41	48	2½:1
30	14	12	16	8	51	60	2½:1
36	14	14	19	9	60	72	2½:1
42	12	16	22	11	69	84	2½:1
48	12	18	27	12	78	90	2½:1
54	12	18	30	12	84	102	2:1
60	12	18	33	12	87	114	1¾:1
66	12	18	36	12	87	120	1½:1
72	12	18	39	12	87	126	1 1/3:1

C.M. ARCH PIPE

EQUIV. DIA.	SPAN	RISE	A 1" ±	B MAX.	H 1" ±	L 1½" ±	W 2" ±	S	GAUGE
	INCHES								
15"	17	13	7	9	6	19	30	2½:1	16
18"	21	15	7	10	6	23	36	2½:1	16
21"	24	18	8	12	6	28	42	2½:1	16
24"	28	20	9	14	6	32	48	2½:1	16
30"	35	24	10	16	6	39	60	2½:1	14
36"	42	29	12	18	8	46	75	2½:1	14
42"	49	33	13	21	9	53	85	2½:1	12
48"	57	38	18	26	12	63	90	2½:1	12
54"	64	43	18	30	12	70	102	2¼:1	12
60"	71	47	18	33	12	77	114	2¼:1	12

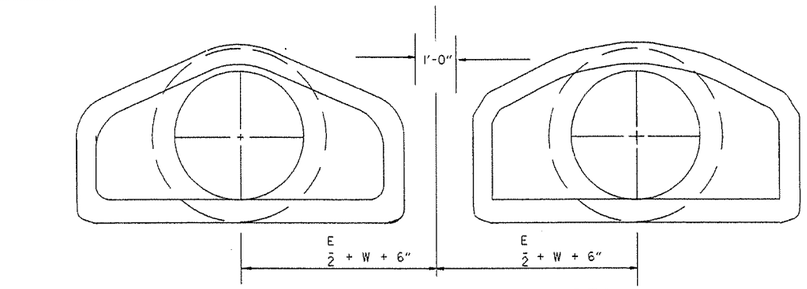

MULTIPLE R.C. PIPE CULVERTS

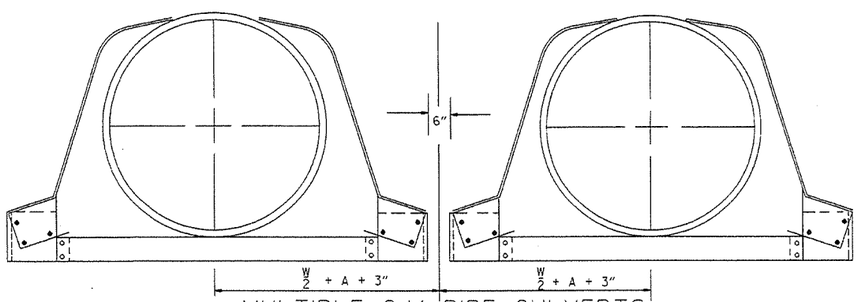

MULTIPLE C.M. PIPE CULVERTS

END SECTIONS FOR CORRUGATED METAL PIPE CULVERTS

DATE	REVISION	FILMED	
10-18-96	REVISED ASTM REF. TO AASHTO	10-18-96	ARKANSAS STATE HIGHWAY COMMISION
5-15-80	REVISED DISTANCE BETWEEN MULTIPLE R.C.P. F.E.S.	664-5-15-80	
7-14-78	C.M. ARCH SIZES TO CONFORM WITH AASHTO SIZES	752-7-14-78	FLARED END SECTION
8-22-75	ADDED MULTIPLE PIPE CULVERTS	517-8-22-75	
12-5-74	REMOVED NOTE RE REINF. FOR R.C. F.E.S.	500-12-5-74	STANDARD DRAWING FES-2
5-24-73	CMP END SECTION, SHOW PIPE PAY LENGTH	627-5-24-73	
10-2-72	REVISED AND REDRAWN	760-10-2-72	

stdfes2.dgn

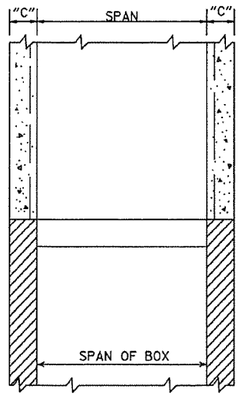

SECTION B-B

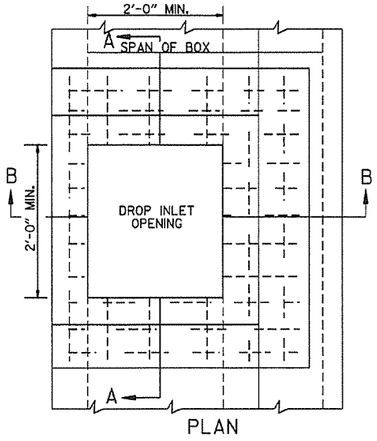

PLAN

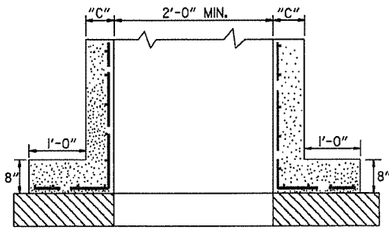

SECTION A-A

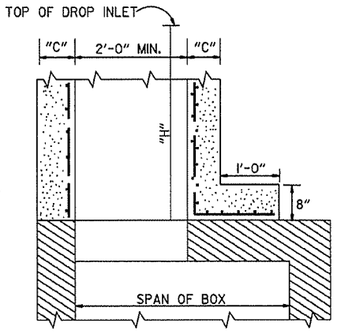

SECTION B-B

METHOD OF CONSTRUCTING DROP INLET ON EXISTING R.C. BOX CULVERT

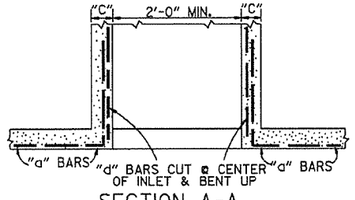

SECTION A-A

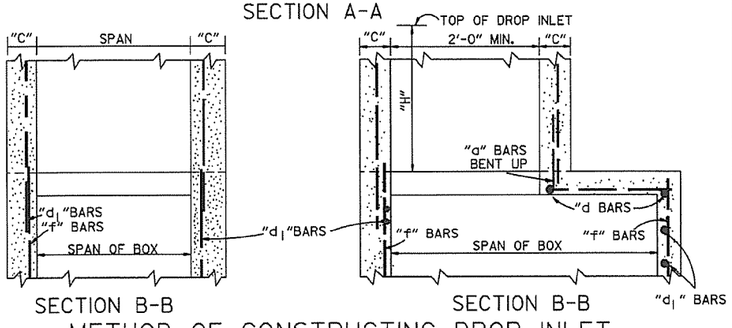

SECTION B-B SECTION B-B

METHOD OF CONSTRUCTING DROP INLET ON NEW R.C. BOX CULVERT

NOTE: "C" DIMENSIONS AND REINFORCING BAR SIZES, SHALL CONFORM TO THOSE SHOWN ON STANDARD DRAWING FOR DROP INLET.

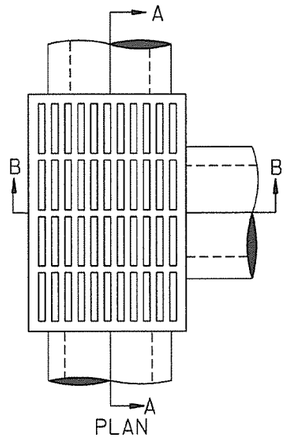

PLAN

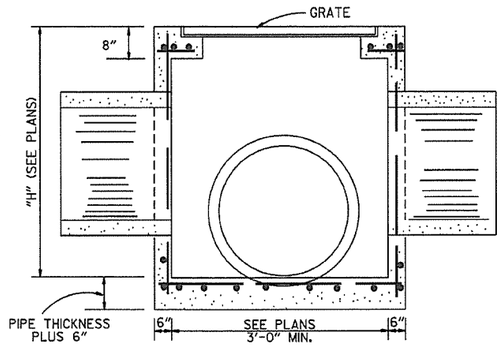

SECTION A-A

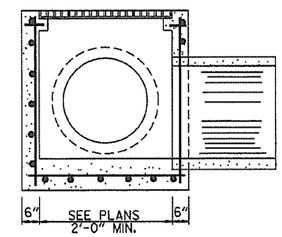

NOTE: REINF. BARS TO BE #4 BARS ON 6" CTRS. WITH 1½" MIN. COVER. THIS TYPE DROP INLET TO BE USED WHERE NOT SUBJECTED TO TRAFFIC.

SECTION B-B

DROP INLET (TYPE E)

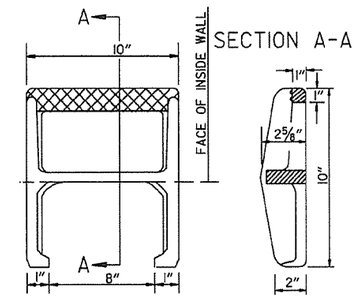

APPROX. WEIGHT = 11 LBS. (CAST IRON)

PLAN

NOTE: THIS DETAIL IS TYPICAL. OTHERS MAY BE USED WITH PRIOR APPROVAL OF THE ENGINEER.

SECTION A-A

DETAIL OF STEP FOR DROP INLET

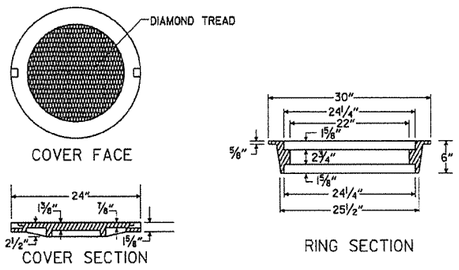

APPROXIMATE TOTAL WEIGHT = 333 LBS.

HEAVY DUTY RING & COVER

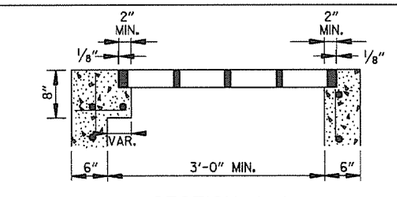

SECTION A-A

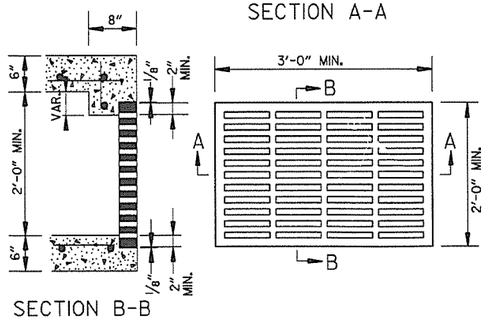

SECTION B-B

APPROXIMATE MINIMUM WATERWAY OPENING = 260 SQ. IN.

GRATE FOR TYPE E DROP INLET

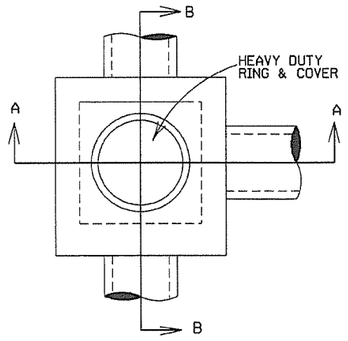

PLAN

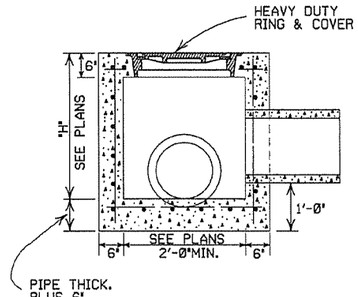

SECTION A-A

NOTE: REINF. BARS TO BE #4 BARS ON 6" CTRS. WITH 1½" MIN. COVER. THIS TYPE JUNCTION BOX TO BE USED WHERE NOT SUBJECTED TO TRAFFIC.

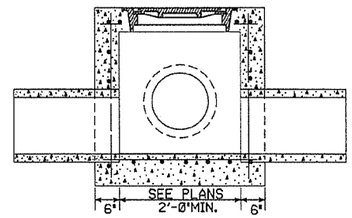

SECTION B-B

JUNCTION BOX (TYPE E)

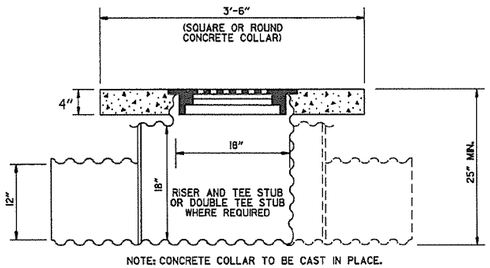

NOTE: CONCRETE COLLAR TO BE CAST IN PLACE. 12" PIPE CULVERTS TO BE MEASURED AND PAID FOR AS " 12" SIDE DRAIN ".

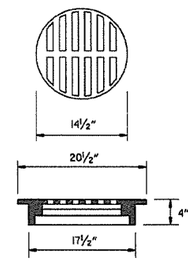

USE NEENAH R-5901-C OR EQUIVALENT BICYCLE SAFE FRAME AND GRATE

DETAIL OF YARD DRAIN

GENERAL NOTES:

1. ALL EXPOSED CORNERS SHALL BE ¾" CHAMFERED.
2. STEPS SHALL BE INSTALLED ON 16" CENTERS ON ALL INLETS 4'-0" HIGH OR OVER, OR AS APPROVED BY THE ENGINEER.
3. EXPANSION JOINT MATERIAL SHALL BE ¾" PREFORMED FIBER.
4. GRATE OR GRATE AND FRAME SHALL BE CONSTRUCTED OF CAST IRON AND SHALL CONFORM TO THE REQUIREMENTS OF THE STANDARD SPECIFICATIONS FOR GRAY IRON CASTINGS AASHTO M 105 CLASS 35B. GRATE MAY BE USED WITHOUT FRAME.
5. GRATE AND FRAME SHALL NOT BE PAINTED.
6. GRATE SHALL BE BICYCLE SAFE.
7. HEAVY DUTY RING SHALL ALWAYS BE INSTALLED WITH FLANGE ON TOP.
8. HEAVY DUTY RING AND COVER SHALL BE CONSTRUCTED OF CAST IRON AND SHALL CONFORM TO THE REQUIREMENTS OF THE STANDARD SPECIFICATIONS FOR GRAY IRON CASTINGS AASHTO M105 CLASS 35B & AASHTO M306.
9. HEAVY DUTY RING AND COVER SHALL NOT BE PAINTED.
10. DIMENSIONS SHOWN FOR RING AND COVER ARE TYPICAL. THE CONTRACTOR MAY SUBSTITUTE SIMILAR CASTINGS WITH THE APPROVAL OF THE ENGINEER. REQUESTING APPROVAL FOR CASTING DESIGNS MAY BE MADE BY REFERRING TO PREVIOUSLY APPROVED DRAWINGS.

DATE REV.	REVISION	DATE FILMED
11-16-01	ADDED NOTE 10	
1-12-00	REVISED HEAVY DUTY RING & COVER	
7-02-98	CHANGED GRATE DETAIL, DELETED DI(TYPE D), REPLACED RING & COVER W/HEAVY DUTY RING & COVER, ADDED JUNCTION BOX (TYPE E)	
6-26-97	ADDED DIMENSION TO TYPE IV-A	
10-18-96	ADDED DETAIL OF YARD DRAIN	
8-15-91	DELETE TYPE IV GRATE	
7-15-88	REVISED STEP DETAIL	
5-20-83	REVISED DETAILS OF GRATES (TYPE IV & IV-A)	
2-4-83	ADDED GENERAL NOTE NO. 4	
3-2-81	ADDED TYPE IV-A GRATE	
5-22-74	DELETED INLET (TYPE F) & GRATE (TYPE III)	
10-2-72	REVISED AND REDRAWN	

ARKANSAS STATE HIGHWAY COMMISSION

DETAILS OF DROP INLETS & JUNCTION BOXES

STANDARD DRAWING FPC-9

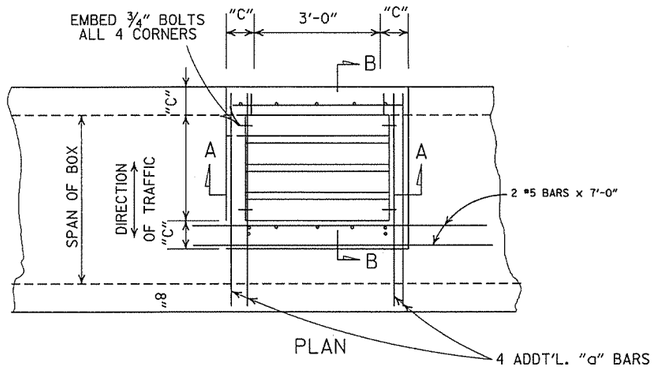

PLAN

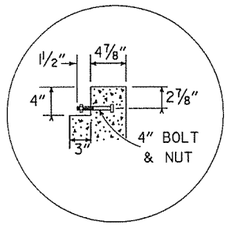

DETAIL A

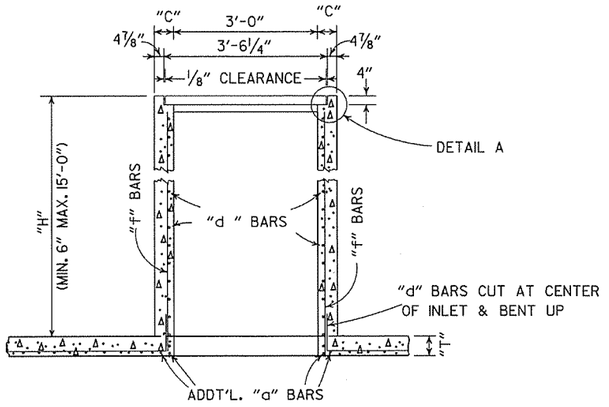

SECTION A-A

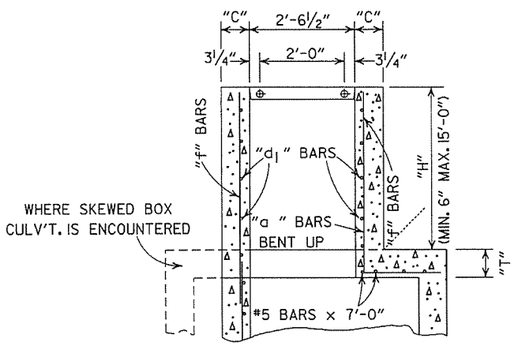

SECTION B-B

NOTE: ADDT'L.REINF. STEEL TO BE INCLUDED IN UNIT PRICE BID PER TYPE "TM" D.I.

DIMENSIONS & REINF. BARS FOR D.I. TO BE THE SAME AS THOSE SHOWN ON APPLICABLE STD. BARREL DRAWING FOR R.C. BOX CULVERTS.

DROP INLET TYPE "TM" FOR REINFORCED CONC. BOX CULVERTS

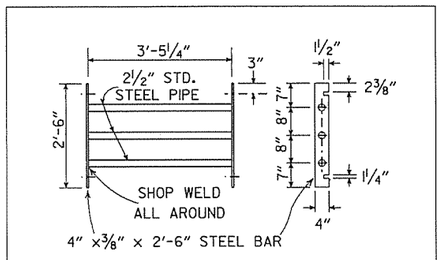

GRATE DETAIL

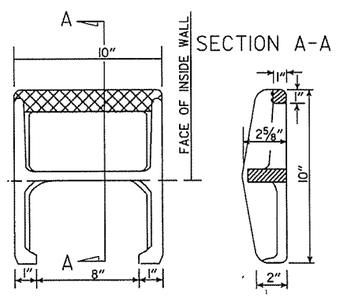

APPROX. WEIGHT = 11 LBS. (CAST IRON)

PLAN

NOTE: THIS DETAIL IS TYPICAL. OTHERS MAY BE USED WITH PRIOR APPROVAL OF THE ENGINEER.

DETAIL OF STEP FOR DROP INLET

GENERAL NOTES:

1. STEEL PIPE FOR GRATES AND BOLTS SHALL CONFORM TO THE REQUIREMENTS OF SECTION 807. BOLTS SHALL CONFORM TO ONE OF THE FOLLOWING: ASTM A193, GRADE B8 CLASS 1OR 2, ASTM A307 OR AASHTO M 164.
2. STEEL PIPE FOR GRATES SHALL BE "STANDARD WEIGHT" PIPE CONFORMING TO ASTM A53 NATIONAL STANDARD PIPE.
3. BOLTS, NUTS, WASHERS SHALL BE GALVANIZED IN ACCORDANCE WITH AASHTO M 232 OR AASHTO M 298, CLASS 40 OR 50.
4. ALL EXPOSED CORNERS TO HAVE ¾" CHAMFER.
5. ALL #4 AND #5 REINFORCING BARS TO HAVE 1½" COVER. LARGER SIZES TO HAVE 2" COVER.
6. THE COMPLETE PIPE GRATE SHALL BE PAINTED IN ACCORDANCE WITH THE STANDARD SPECIFICATIONS.

TABLE OF "W" DIMENSIONS

312

I.D. PIPE	SKEW OF CROSS DRAIN		
	STRAIGHT	30°	45°
	"W"	"W"	"W"
24"	4'-0"	4'-0"	4'-0"
30"	4'-0"	4'-0"	4'-5"
36"	4'-0"	4'-3"	5'-3"
42"	4'-3"	4'-11"	6'-1"
48"	4'-10"	5'-7"	6'-11"

NOTE: DIMENSIONS SHOWN ABOVE ARE FOR PIPES INTERSECTING DROP INLET ON ONE SIDE ONLY. FOR SKEWED PIPES INTERSECTING BOTH SIDES OF DROP INLET, "W" WILL NEED TO BE INCREASED OR AXIS OF INTERSECTING PIPES WILL NEED TO BE SHIFTED.

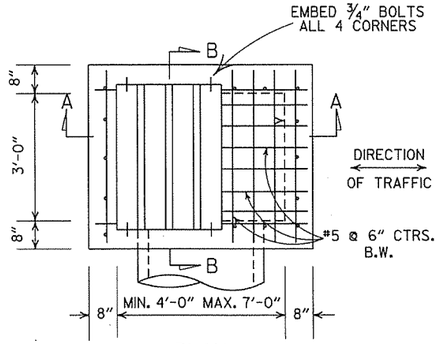

PLAN

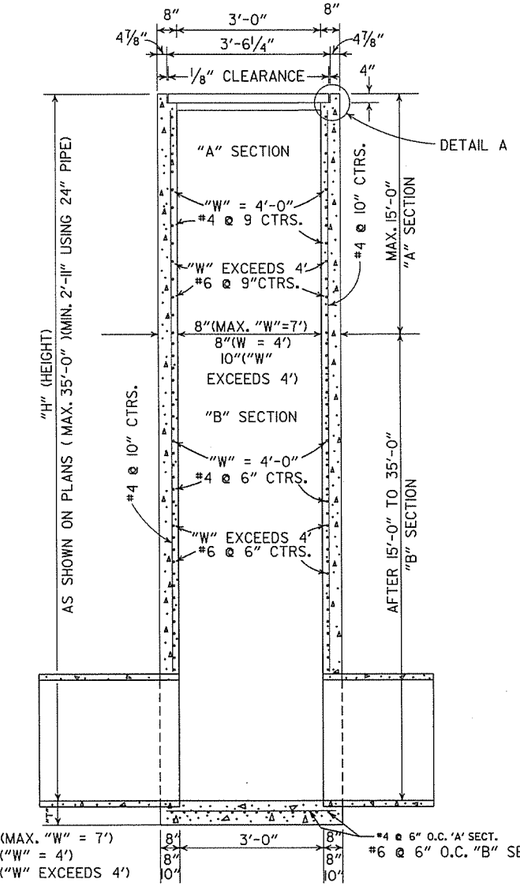

SECTION B-B

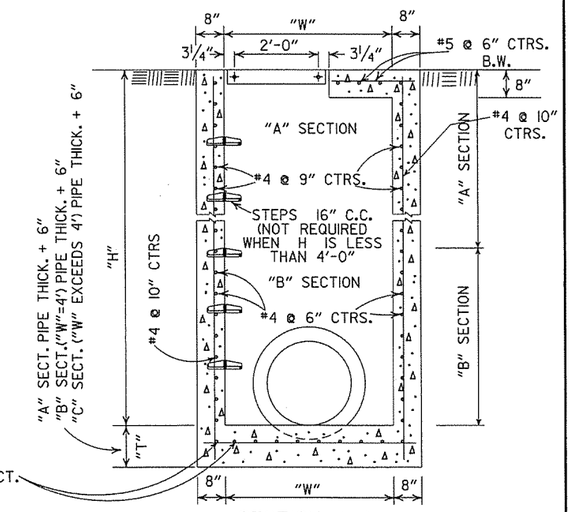

SECTION A-A

DROP INLET(TYPE RM)

8-22-02	ADDED & REVISED DIMENSION TO SECTION A-A	
1-12-00	CORRECTED DIMENSION ON SECTION B-B	
11-06-97	ADDED DIMENSION TO SECTION A-A	
10-18-96	REVISED ASTM REF. TO AASHTO AND ADDED NOTE TO TABLE OF "W" DIMENSIONS	
10-1-92	ADDED DIRECTION OF TRAFFIC	10-1-92
8-15-91	ADDED NOTE ABOUT PAINTING OF GRATE	8-15-91
11-30-89	ALTERED DETAIL A	11-30-89
7-15-88	REVISED STEP DETAIL,TM & RM D.I. & GRATE DETAIL	719-7-15-88
10-2-72	REVISED AND REDRAWN	542-10-2-72
REVISED		DATE FILMED

ARKANSAS STATE HIGHWAY COMMISSION

DETAILS OF DROP INLETS

STANDARD DRAWING FPC-9D

4'-0" LENGTH DROP INLET

PIPE SIZE	MIN. WIDTH	HEIGHT 5'-0" CLASS A CONC.	HEIGHT 5'-0" REINF. STEEL	PLUS OR MINUS PER LIN. FT. OF HEIGHT CLASS A CONC.	PLUS OR MINUS PER LIN. FT. OF HEIGHT REINF. STEEL
		CU. YDS.	POUNDS	CU. YDS.	POUNDS
18"	2'-6"	1.77	156	0.28	22
24"	2'-6"	1.79	156	0.28	22
30"	3'-2"	2.39	205	0.30	26
36"	3'-8"	2.63	236	0.32	28
42"	4'-4"	2.95	250	0.34	30
48"	4'-10"	3.21	265	0.36	32

NOTE: QUANTITIES ARE APPROXIMATE AND ARE SHOWN FOR BIDDER INFORMATION ONLY.

DROP INLET EXTENSION

4'-0" CLASS A CONC.	4'-0" REINF. STEEL	8'-0" CLASS A CONC.	8'-0" REINF. STEEL
CU. YDS.	POUNDS	CU. YDS.	POUNDS
0.58	38	0.87	72
DEDUCT FROM QUANTITY COMPUTED FOR EACH EXTENSION ADDED.			
0.04	3		

DEDUCT FROM QUANTITY COMPUTED FOR EACH PIPE ENTERING INLET		
INSIDE DIA. PIPE	CLASS A CONC.	REINF. STEEL
INCHES	CU. YDS.	POUNDS
18	0.05	2
24	0.09	3
30	0.13	4
42	0.24	8

BAR DIAGRAM

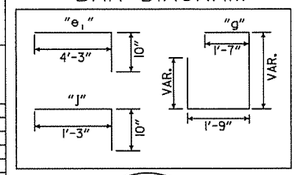

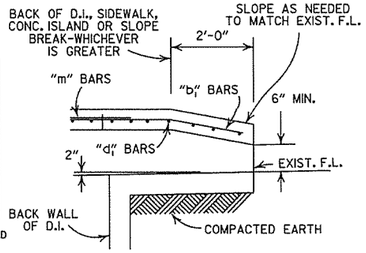

BACK OPENING

WHEN OPENING IN BACK IS CALLED FOR ON PLANS EXTEND OPENING AS SHOWN IN DETAIL. PAYMENT TO BE INCLUDED IN PRICE BID FOR DROP INLET (TYPE C).

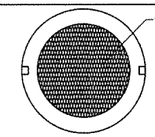



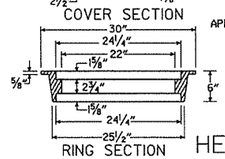

APPROXIMATE TOTAL WEIGHT = 333 LBS.

HEAVY DUTY RING & COVER

GENERAL NOTES:
1. ALL EXPOSED CORNERS TO HAVE ¾" CHAMFER.
2. STEPS SHALL BE INSTALLED IN ALL INLETS 4'-0" HIGH AND OVER OF AS APPROVED BY THE ENGINEER.
3. ALL REINF. BARS SHALL BE #4 AND HAVE 1½" COVER.
4. DROP INLETS AND EXTENSION ON CURVED SECTIONS SHALL CONFORM TO THE CURVATURE OF THE CURB.
5. THIS DROP INLET MAY BE CONSTRUCTED ON NEW OR EXISTING R.C. BOX CULVERT AS SHOWN ON F.P.C.-3.
6. WHEN PLANS CALL FOR DROP INLET OVER 10'-0" HIGH, FLOOR AND WALLS SHALL BE CONSTRUCTED AS SHOWN FOR TYPE "RM" DROP INLET (F.P.C.-9D).
7. HEAVY DUTY RING SHALL ALWAYS BE INSTALLED WITH FLANGE ON TOP.
8. DURING CONSTRUCTION OF THE ROADWAY THE CONTRACTOR SHALL MAINTAIN DRAINAGE INTO OR AROUND THE DROP INLET AS APPROVED BY THE ENGINEER.
9. PAYMENT FOR CURB AND/OR CURB AND GUTTER WITHIN THE LIMITS OF DROP INLETS AND DROP INLET EXTENSIONS SHALL BE CONSIDERED INCLUDED IN PAYMENT MADE FOR DROP INLETS AND/OR DROP INLET EXTENSIONS.
10. HEAVY DUTY RING AND COVER SHALL BE CONSTRUCTED OF CAST IRON AND SHALL CONFORM TO THE REQUIREMENTS OF THE STANDARD SPECIFICATIONS FOR GRAY IRON CASTINGS AASHTO M105 CLASS 35B & AASHTO M306.
11. HEAVY DUTY RING AND COVER SHALL NOT BE PAINTED.
12. 4"×2" NOTCH SHALL BE FORMED IN ALL DROP INLETS TO SUPPORT SIDEWALK CONSTRUCTION. REFER TO DETAIL OF NOTCH FOR SIDEWALKS.
13. DIMENSIONS SHOWN FOR RING AND COVER ARE TYPICAL. THE CONTRACTOR MAY SUBSTITUTE SIMILAR CASTINGS WITH THE APPROVAL OF THE ENGINEER. REQUESTING APPROVAL FOR CASTING DESIGNS MAY BE MADE BY REFERRING TO PREVIOUSLY APPROVED DRAWINGS.

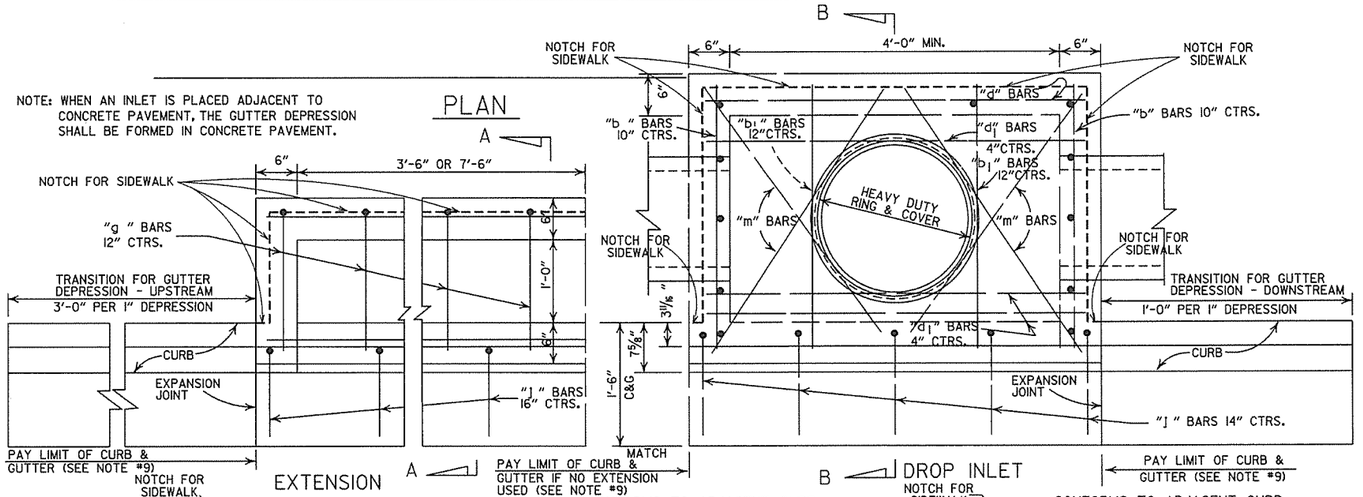

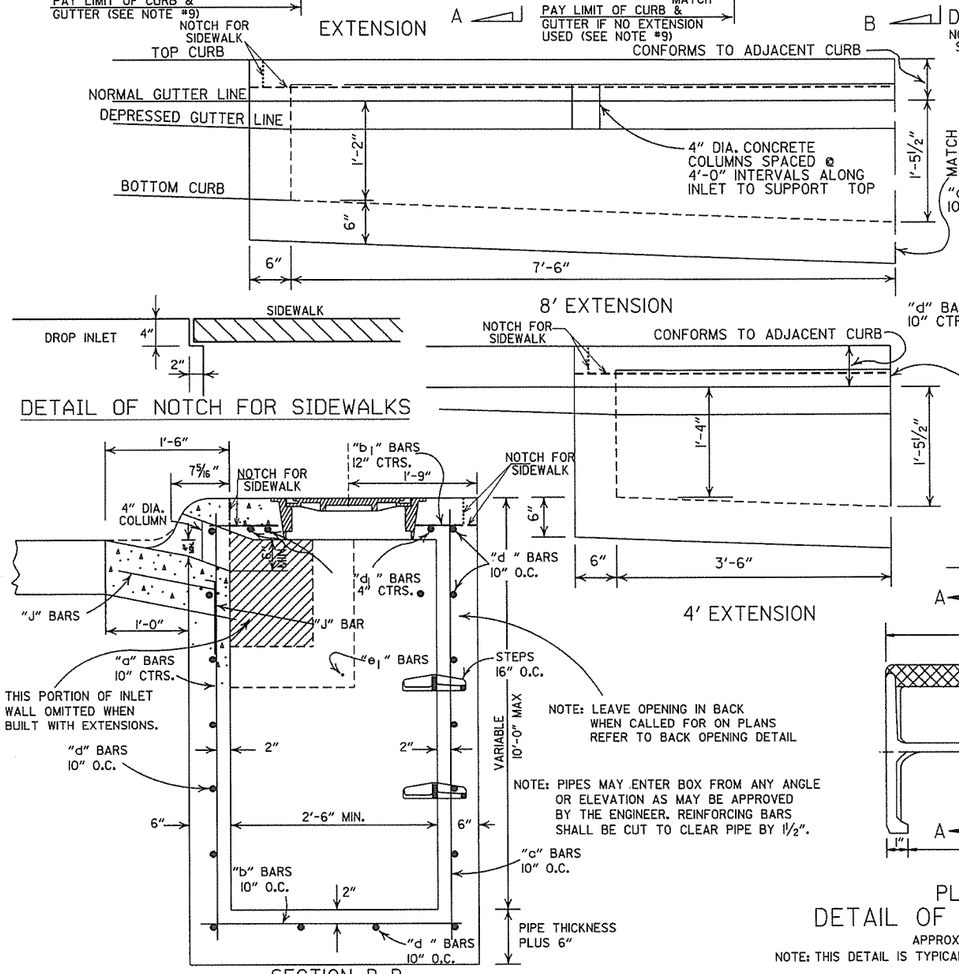

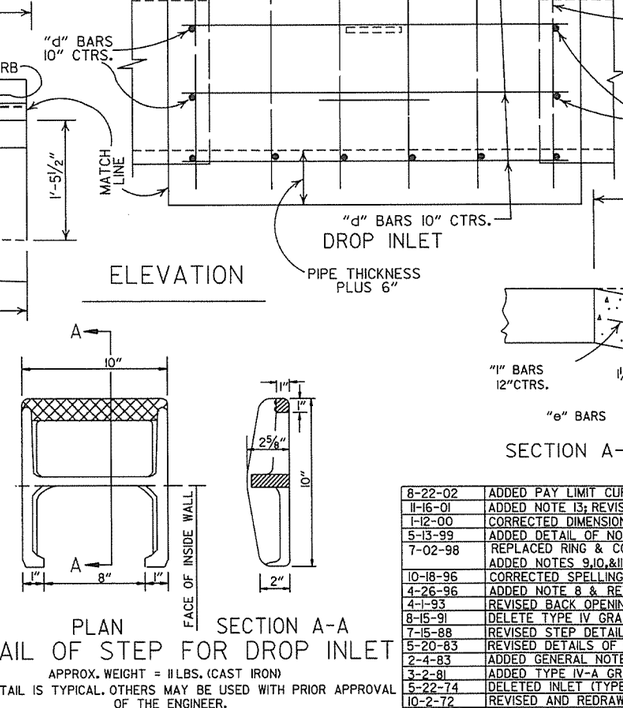

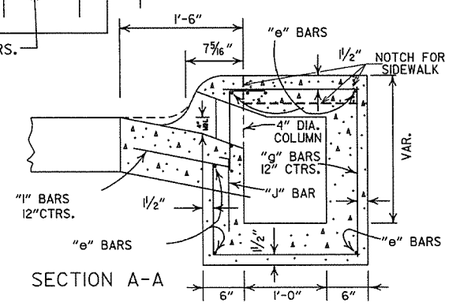

DATE REV.	REVISION	DATE FILMED
8-22-02	ADDED PAY LIMIT CURB NOTES TO SECTIONS A-A & B-B	
11-16-01	ADDED NOTE 13; REVISED SECTION B-B	
1-12-00	CORRECTED DIMENSION ON SECTION B-B & REVISED RING & COVER	
5-13-99	ADDED DETAIL OF NOTCH FOR SIDEWALKS	
7-02-98	REPLACED RING & COVER W/HEAVY DUTY RING & COVER ADDED NOTES 9,10,&11	
10-18-96	CORRECTED SPELLING	
4-26-96	ADDED NOTE 8 & REVISED (4')(8') EXTENSION TITLES	10-18-96
4-1-93	REVISED BACK OPENING & NOTE	
8-15-91	DELETE TYPE IV GRATE	
7-15-88	REVISED STEP DETAIL	
5-20-83	REVISED DETAILS OF GRATES (TYPE IV & IV-A)	
2-4-83	ADDED GENERAL NOTE NO. 4	
3-2-81	ADDED TYPE IV-A GRATE	
5-22-74	DELETED INLET (TYPE F) & GRATE (TYPE III)	
10-2-72	REVISED AND REDRAWN	

ARKANSAS STATE HIGHWAY COMMISSION

DETAILS OF DROP INLETS

(TYPE C)

STANDARD DRAWING FPC-9E

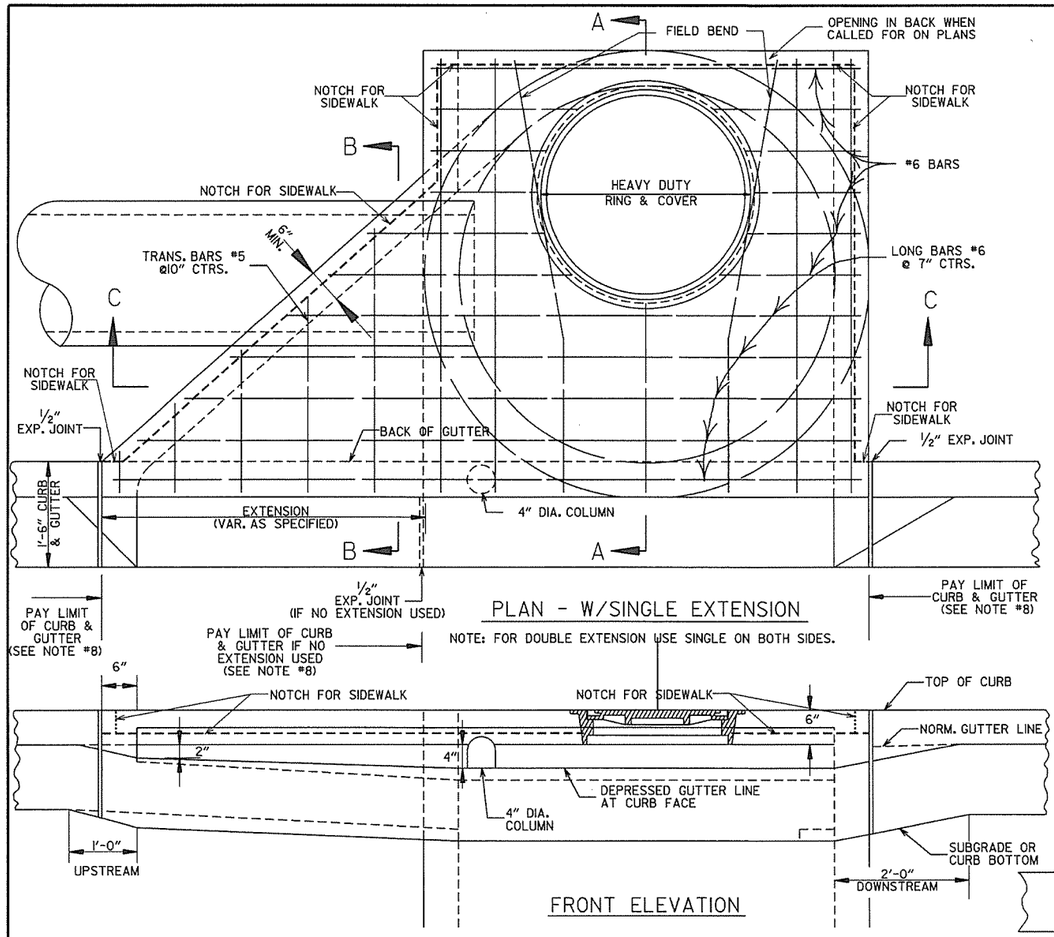

PLAN - W/SINGLE EXTENSION

NOTE: FOR DOUBLE EXTENSION USE SINGLE ON BOTH SIDES.

FRONT ELEVATION

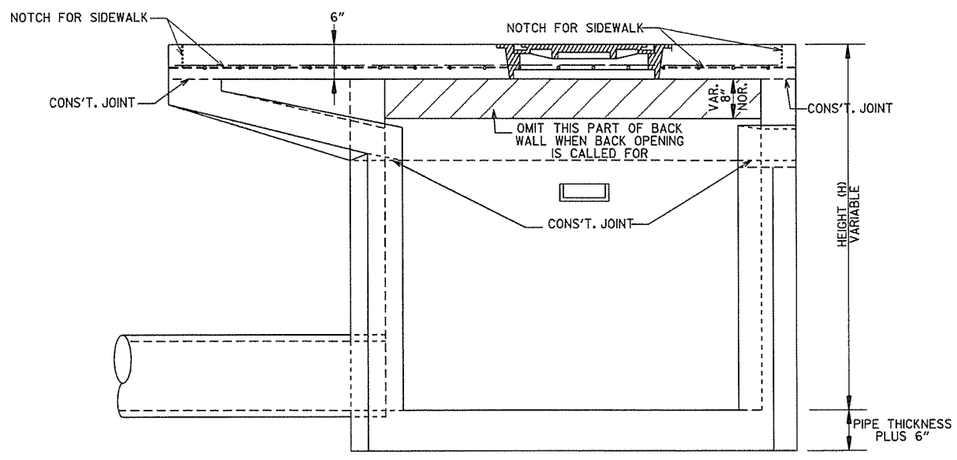

SECTION C-C

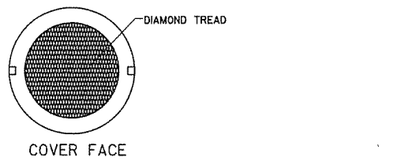

APPROXIMATE TOTAL WEIGHT = 333 LBS.

HEAVY DUTY RING & COVER

1. HEAVY DUTY RING AND COVER SHALL BE CONSTRUCTED OF CAST IRON AND SHALL CONFORM TO THE REQUIREMENTS OF THE STANDARD SPECIFICATIONS FOR GRAY IRON CASTINGS AASHTO M105 CLASS 35B & AASHTO M306.
2. HEAVY DUTY RING AND COVER SHALL NOT BE PAINTED.
3. HEAVY DUTY RING SHALL ALWAYS BE INSTALLED WITH FLANGE ON TOP.

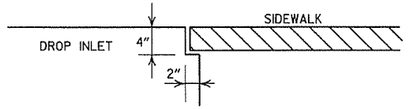

DETAIL OF NOTCH FOR SIDEWALKS

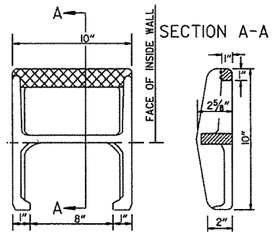

APPROX. WEIGHT = 11 LBS. (CAST IRON)

PLAN

NOTE: THIS DETAIL IS TYPICAL. OTHERS MAY BE USED WITH PRIOR APPROVAL OF THE ENGINEER.

DETAIL OF STEP FOR DROP INLET

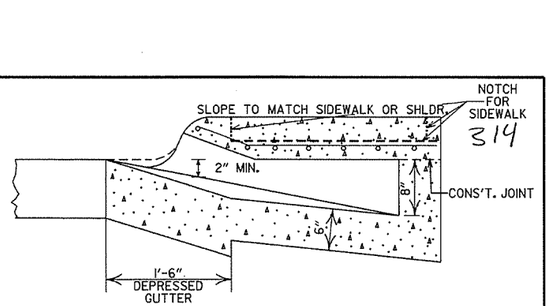

SECTION B-B

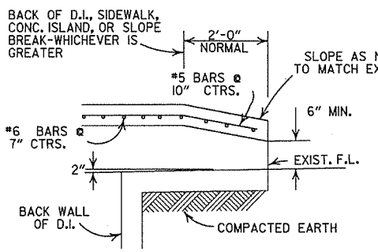

BACK OPENING

WHEN OPENING IN BACK IS CALLED FOR ON PLANS EXTEND OPENING AS SHOWN IN DETAIL. PAYMENT TO BE INCLUDED IN PRICE BID FOR DROP INLET (TYPE MO).

GENERAL NOTES:

1. ALL EXPOSED CORNERS TO HAVE 3/4" CHAMFER.
2. STEPS SHALL BE INSTALLED IN ALL INLETS 4'-0" HIGH AND OVER OR AS DIRECTED BY THE ENGINEER.
3. ALL REINFORCING BARS SHALL BE GRADE 60 AND HAVE MIN. 1 1/2" COVER.
4. DROP INLETS AND EXTENSION ON CURVED SECTIONS SHALL CONFORM TO THE CURVATURE OF THE CURB.
5. 4" DIA. COLUMNS SPACED AT MAX. 4'-0" INTERVALS SHALL BE INSTALLED ALONG INLET AND EXTENSION TO SUPPORT TOP.
6. BASE AND INLET WALLS SHALL BE CAST MONOLITHICALLY.
7. THE THROAT SHALL BE CAST INTEGRALLY WITH THE GUTTER.
8. PAYMENT FOR CURB AND/OR CURB AND GUTTER WITHIN THE LIMITS OF DROP INLETS AND DROP INLET EXTENSIONS SHALL BE CONSIDERED INCLUDED IN PAYMENT MADE FOR DROP INLETS AND/OR DROP INLET EXTENSIONS.
9. PIPES MAY ENTER DROP INLET FROM ANY ANGLE OR ELEVATION AS MAY BE APPROVED BY THE ENGINEER.
10. APPROPRIATE SIZE TYPE C DROP INLETS MAY BE SUBSTITUTED FOR TYPE MO DROP INLETS AS APPROVED BY THE ENGINEER. PAYMENT TO BE AS DROP INLET (TYPE MO).
11. DURING CONSTRUCTION OF THE ROADWAY THE CONTRACTOR SHALL MAINTAIN DRAINAGE INTO OR AROUND THE DROP INLET AS APPROVED BY THE ENGINEER.
12. 4"x2" NOTCH SHALL BE FORMED IN ALL DROP INLETS TO SUPPORT SIDEWALK CONSTRUCTION. REFER TO DETAIL OF NOTCH FOR SIDEWALKS.
13. DIMENSIONS SHOWN FOR RING AND COVER ARE TYPICAL. THE CONTRACTOR MAY SUBSTITUTE SIMILAR CASTINGS WITH THE APPROVAL OF THE ENGINEER. REQUESTING APPROVAL FOR CASTING DESIGNS MAY BE MADE BY REFERRING TO PREVIOUSLY APPROVED DRAWINGS.

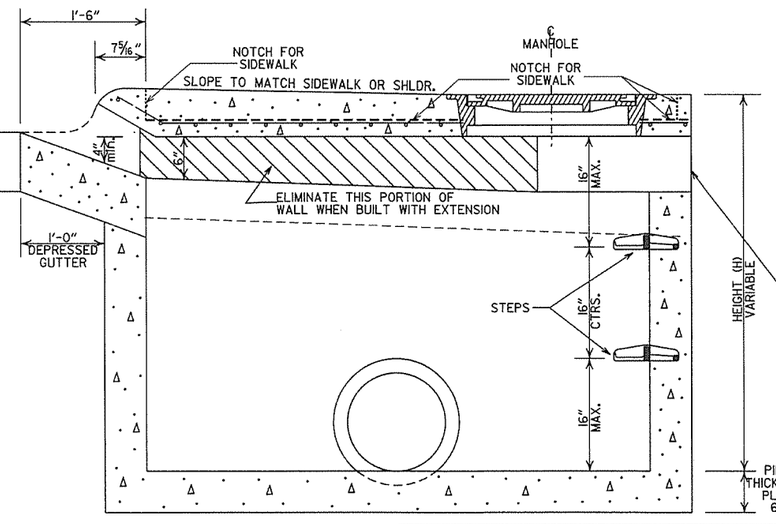

SECTION A-A

DIA. OF D.I.	DIA. OF OUTLET PIPE	MINIMUM WALL THICKNESS	
		CAST IN PLACE	PRECAST
4' I.D.	12" THRU 27"	6"	5"
5' I.D.	30" THRU 42"	8"	6"
6' I.D.	48" THRU 54"	8"	7"

DATE	REVISIONS	DATE FILMED
8-22-02	ADDED PAY LIMIT CURB NOTES TO SECTIONS A-A & B-B	
11-16-01	ADDED NOTE 13	
1-12-00	REVISED HEAVY DUTY RING & COVER	
5-13-99	ADDED NOTCH DETAIL FOR SIDEWALKS	
7-02-98	REP. NOTE 8, REM. PLAN DET., REV. PICTURE FOR NEW RING & COVER, ADDED HEAVY DUTY RING & COVER AND DETAIL OF STEP FOR DROP INLET	
4-28-96	ADDED NOTE 11 ADJ. OPENING DIMENSION	
10-25-95	CORRECTED #5 BAR SPACING	
7-20-95	CORRECTED DIAMETER OF D.I. IN BOX	
2-2-95	TYPE C TO MO (OPEN, BACK DETAIL)	
11-3-94	REVISED GENERAL NOTES	11-3-94
4-1-93	REV. BACK OPEN. DETAIL & NOTE	4-1-93
8-15-91	REVISED NOTES 11,12 & ADDED BK.OPEN DETAIL	8-15-91
11-30-89	ADDED NOTE NO. 12	11-30-89
5-23-89	ADDED NOTE & MINIMUM WALL THICKNESS	5A-5-23-89
7-15-88	ADDED EXTEND NOTE TO SECTION A-A	639-7-15-88
1-14-87	MODIFIED WALL THICKNESS	783-1-14-87
6-12-87	ISSUED	4-6-87

ARKANSAS STATE HIGHWAY COMMISSION

DETAILS OF DROP INLET (TYPE MO)

STANDARD DRAWING FPC-9M

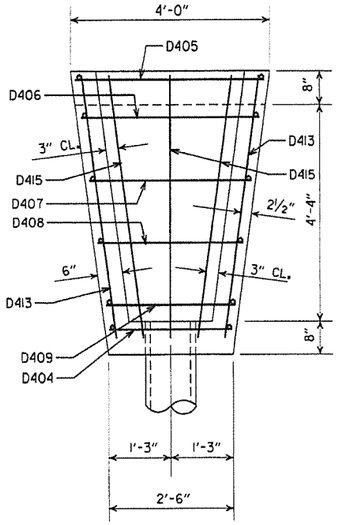

PLAN

BAR LIST (CONCRETE SPILLWAY)

MARK	NO. REQ'D.	LENGTH	BENDING DIAGRAM
D404	3	2'-2"	5'-4", 1'-2", 2" P.D., D415
D405	2	3'-8"	
D406	1	3'-5"	
D407	1	3'-1"	
D408	1	2'-9"	
D409	1	2'-5"	
D410	2	2'-5"	
D411	2	2'-2"	
D412	2	1'-9"	
D413	2	5'-6"	
D414	2	1'-2"	
D415	3	6'-5"	

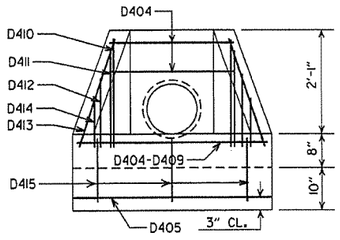

FRONT ELEVATION

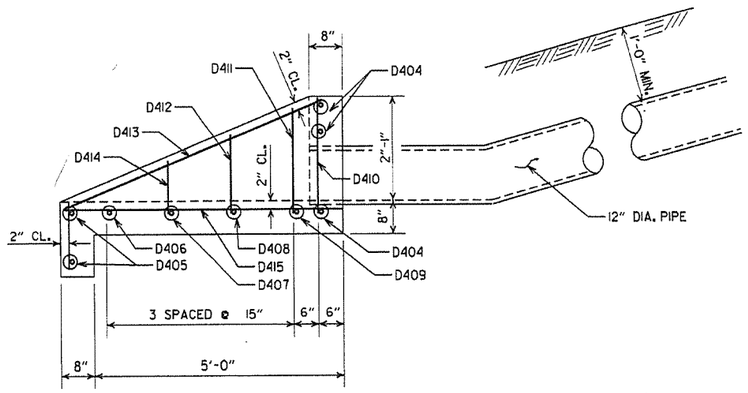

SIDE ELEVATION
CONCRETE SPILLWAY

DETAILS OF CONCRETE SPILLWAY (TYPE A)

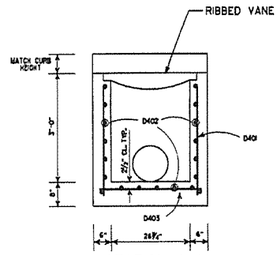

SECTION A-A

BAR LIST (DROP INLET)

MARK	TYPE N-1		TYPE N-2		TYPE N-3	
	NO. REQ'D.	LENGTH	NO. REQ'D.	LENGTH	NO. REQ'D.	LENGTH
D401	20	3'-0"	26	3'-0"	32	3'-0"
D402	19	2'-2"	19	3'-8"	19	5'-2"
D403	17	2'-11"	20	2'-11"	23	2'-11"

ALL BARS #4 @ 6" SPACING

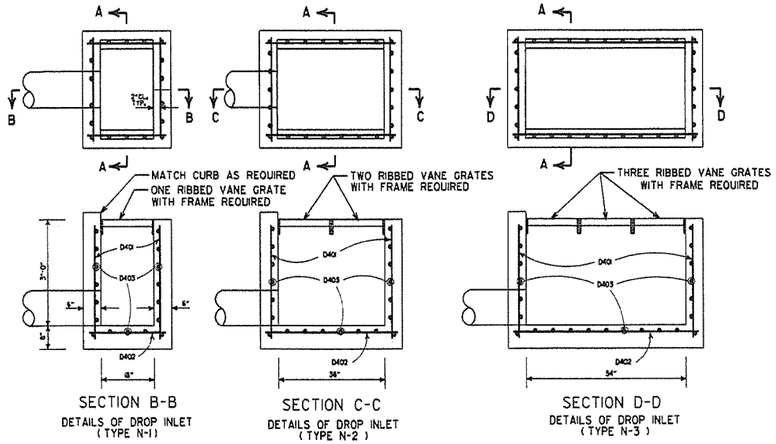

SECTION B-B
DETAILS OF DROP INLET
(TYPE N-1)

SECTION C-C
DETAILS OF DROP INLET
(TYPE N-2)

SECTION D-D
DETAILS OF DROP INLET
(TYPE N-3)

DETAILS OF DROP INLET

GENERAL NOTES (GRATE & FRAME)

1. RIBBED VANE GRATE AND FRAME SHALL BE CONSTRUCTED OF CAST IRON AND SHALL CONFORM TO THE REQUIREMENTS OF THE STANDARD SPECIFICATIONS FOR GRAY IRON CASTINGS AASHTO M 105 CLASS 35B & AASHTO M 306.
2. GRATE AND FRAME SHALL NOT BE PAINTED.
3. GRATE AND FRAME SHALL BE INSTALLED IN DROP INLET IN ASSEMBLED POSITION.
4. APPROXIMATE WEIGHT OF GRATE SHALL BE 170 LBS.

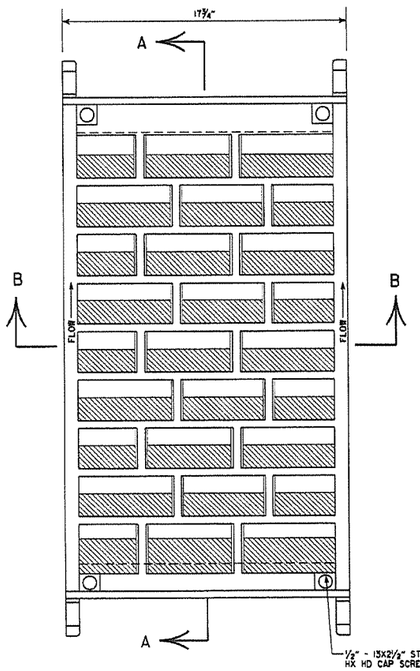

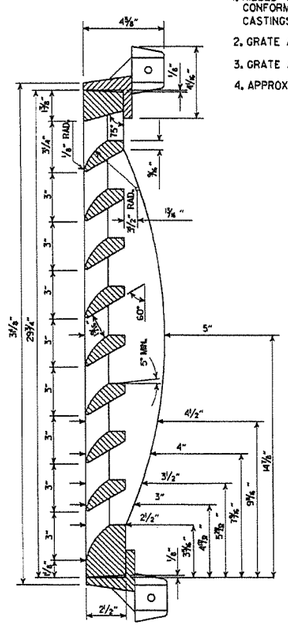

SECTION A-A

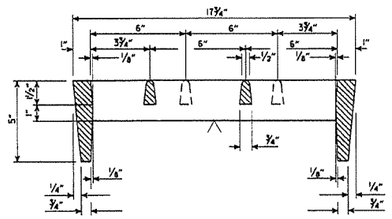

SECTION B-B

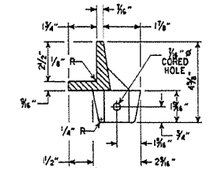

SECTION THRU FRAME

DETAILS OF RIBBED VANE GRATE AND FRAME

DATE REVISED	DATE FILMED	DESCRIPTION
7-02-98	7-2-98	REVISED SECT. A-A DETAIL OF DROP INLET & ADDED AASHTO REF. TO NOTE 1, REVISED GRATE
10-18-96		REVISED ASTM REF. TO AASHTO
8-15-91		ISSUED

ARKANSAS STATE HIGHWAY COMMISSION

DETAILS OF DROP INLETS AND SPILLWAY OUTLET

STANDARD DRAWING FPC-9N

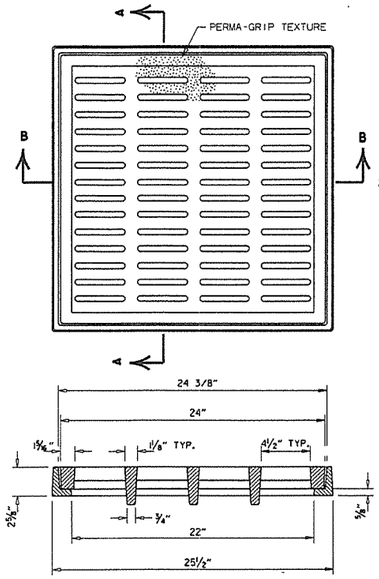

SECTION B-B

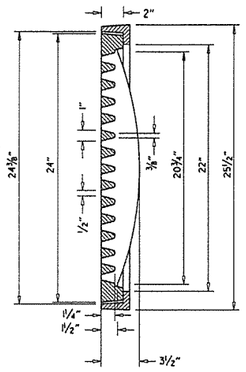

SECTION A-A

DETAILS OF PEDESTRIAN GRATE AND FRAME

GENERAL NOTES (PEDESTRIAN GRATE & FRAME)

1. THE PEDESTRIAN GRATE SHALL BE ORIENTED IN THE TOP OF THE DROP INLET SO THAT THE ½" OPENINGS ARE PERPENDICULAR TO THE PATH OF PEDESTRIAN TRAVEL.
2. THE PEDESTRIAN GRATE AND FRAME SHALL BE CONSTRUCTED OF CAST IRON AND SHALL CONFORM TO THE REQUIREMENTS OF THE STANDARD SPECIFICATIONS FOR GRAY IRON CASTINGS AASHTO M 105, CLASS 35B, & AASHTO M 306.
3. THE GRATE AND FRAME SHALL NOT BE PAINTED.
4. THE GRATE AND FRAME SHALL BE INSTALLED IN THE DROP INLET IN THE ASSEMBLED POSITION.
5. THE APPROXIMATE WEIGHT OF THE GRATE AND FRAME SHALL BE 211LBS.
6. THE MINIMUM WATERWAY OPENING SHALL BE 122 SQ. IN.

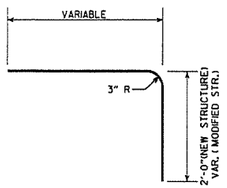

DETAIL OF BENT "b" BAR

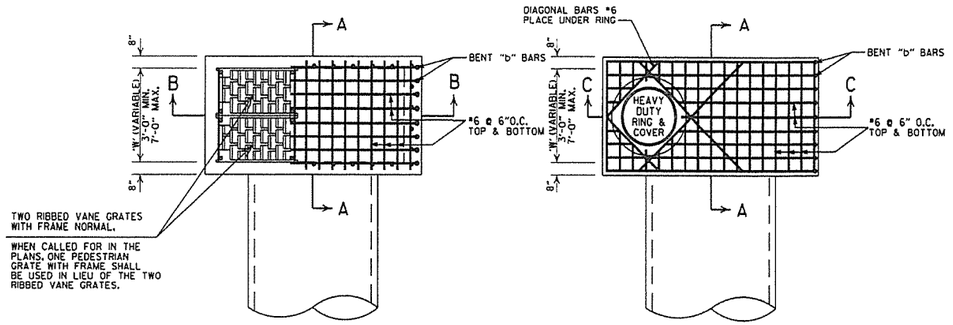

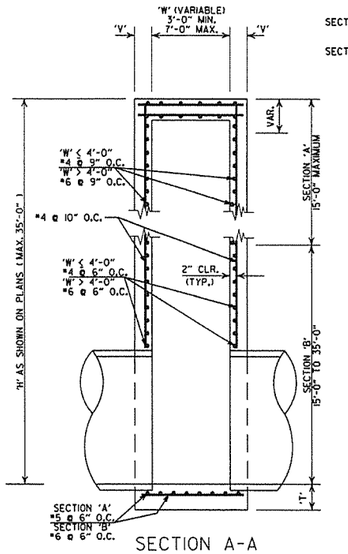

SECTION A-A

SECTION 'A' 'V' = 8"
SECTION 'B' (W<4'-0") 'V' = 8"
SECTION 'B' (W>4'-0") 'V' = 10"

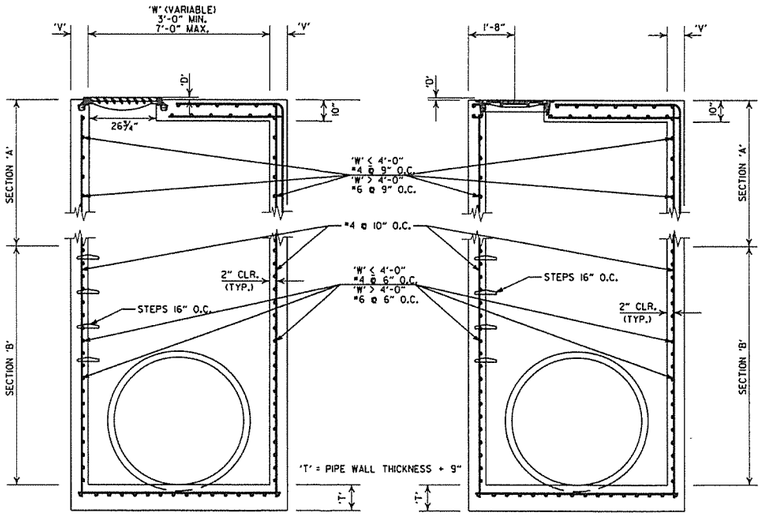

SECTION B-B

SECTION C-C

DETAILS OF DROP INLET (TYPE ST)

DETAILS OF JUNCTION BOX (TYPE ST)

GENERAL NOTES (TYPE ST DROP INLET & JUNCTION BOX)

1. THE 'D' DIMENSION SHALL MATCH THE FINAL LIFT OF ACHM SURFACE COURSE SHOWN IN THE PLANS WHEN ASPHALT PAVING SURROUNDS THE GRATE OR RING COVER, AND SHALL BE 0" AT OTHER INSTALLATIONS.
2. THE STEPS SHALL BE OMITTED WHERE 'H' IS LESS THAN 4'-0".
3. ALL EXPOSED CORNERS ARE TO HAVE A ¾" CHAMFER.

GENERAL NOTES (HEAVY DUTY RING & COVER):

1. HEAVY DUTY RING AND COVER SHALL BE CONSTRUCTED OF CAST IRON AND SHALL CONFORM TO THE REQUIREMENTS OF THE STANDARD SPECIFICATIONS FOR GRAY IRON CASTINGS AASHTO M 105, CLASS 35B, & AASHTO M 306.
2. HEAVY DUTY RING AND COVER SHALL NOT BE PAINTED.
3. HEAVY DUTY RING SHALL ALWAYS BE INSTALLED WITH FLANGE ON TOP.
4. DIMENSIONS SHOWN FOR RING AND COVER ARE TYPICAL. THE CONTRACTOR MAY SUBSTITUTE SIMILAR CASTINGS WITH THE APPROVAL OF THE ENGINEER. REQUESTING APPROVAL FOR CASTING DESIGNS MAY BE MADE BY REFERRING TO PREVIOUSLY APPROVED DRAWINGS.

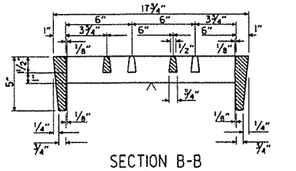

SECTION B-B

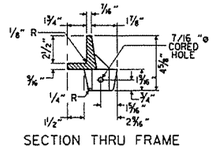

SECTION THRU FRAME

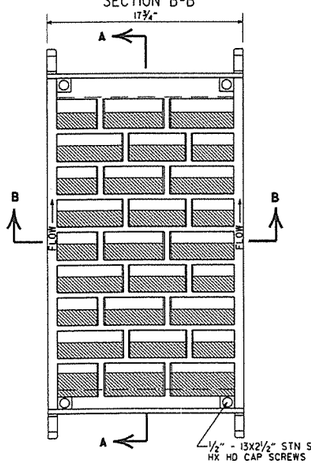

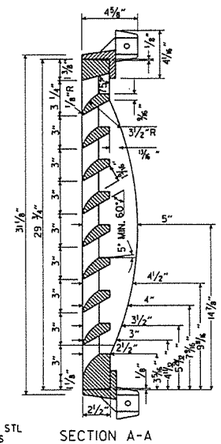

SECTION A-A

DETAILS OF RIBBED VANE GRATE AND FRAME

GENERAL NOTES (RIBBED VANE GRATE & FRAME)

1. RIBBED VANE GRATE AND FRAME SHALL BE CONSTRUCTED OF CAST IRON AND SHALL CONFORM TO THE REQUIREMENTS OF THE STANDARD SPECIFICATIONS FOR GRAY IRON CASTINGS AASHTO M 105, CLASS 35B, & AASHTO M 306.
2. GRATE AND FRAME SHALL NOT BE PAINTED.
3. GRATE AND FRAME SHALL BE INSTALLED IN DROP INLET IN ASSEMBLED POSITION.
4. APPROXIMATE WEIGHT OF GRATE SHALL BE 170 LBS.

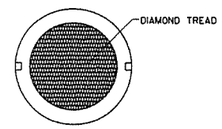

COVER FACE

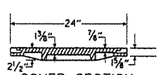

COVER SECTION

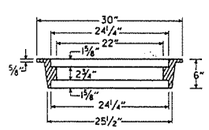

RING SECTION

HEAVY DUTY RING & COVER

APPROXIMATE TOTAL WEIGHT = 333 LBS.

DATE REVISED	DATE FILMED	DESCRIPTION
7-26-12		REMOVED NOTE 4, REVISED 'T', REVISED BOTTOM SLAB REBAR FOR SECTION 'A', SHOWED REBAR CLEARANCE IN SECTIONS
11-16-01		ADDED NOTE 4
1-12-00		REVISED HEAVY DUTY RING & COVER
5-13-99		ADDED PEDESTRIAN FRAME & GRATE
7-02-98		REMOVED NOTE 5, REV. DIMENSIONS, ADDED HEAVY DUTY RING & COVER ADDED AASHTO REF. REVISED GRATE
10-18-96		REVISED ASTM REF. TO AASHTO
10-1-92		REVISED & REISSUED
8-15-91	8-15-91	REVISED & REISSUED

ARKANSAS STATE HIGHWAY COMMISSION

DETAILS OF DROP INLET & JUNCTION BOX (TYPE ST)

STANDARD DRAWING FPC-9S

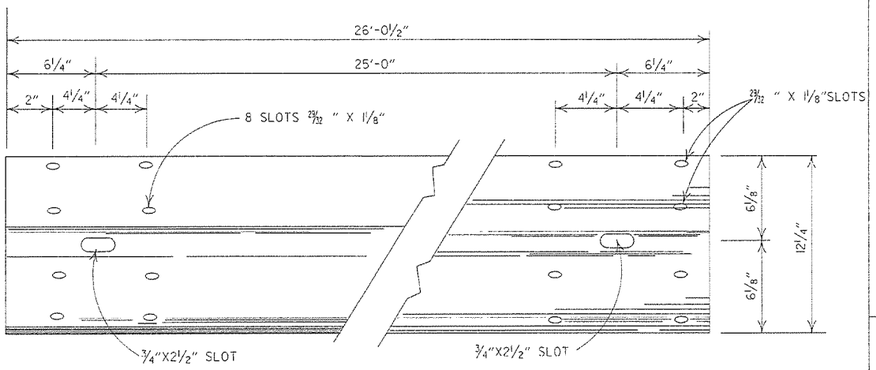

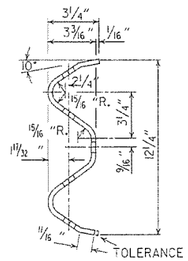

DETAILS OF W-BEAM GUARD RAIL

RAIL SECTION OF CLOSELY SIMILAR DIMENSIONS AND COMPARABLE STRENGTH MAY BE SUBSTITUTED IF APPROVED BY THE ENGINEER.

SPLICE BOLT
POST BOLT - SAME EXCEPT LENGTH

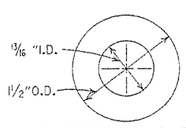

CUT STEEL WASHER

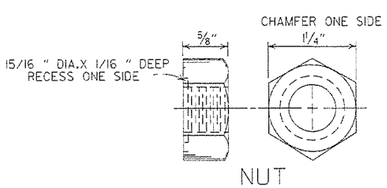

NUT

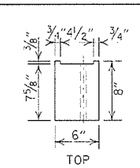

WOOD BLOCKOUT USED WITH WOOD POSTS SHALL BE 6"x8"x1'-2" WITH NO NOTCH REQUIRED.

TOP

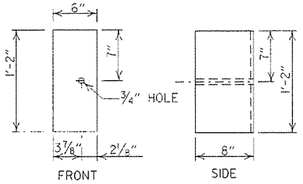

WOOD BLOCKOUT (W-BEAM)

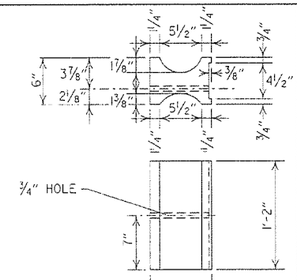

NOTES:

1. SIMILAR SHAPED PLASTIC BLOCKOUTS MAY BE USED AS LONG AS THEY MEET NCHRP-350 TEST LEVEL 3 SPECIFICATIONS OR REQUIREMENTS FOR MANUAL FOR ASSESSING SAFETY HARDWARE (MASH).
2. DIMENSIONS ARE SUBJECT TO MANUFACTURERS TOLERANCES.

PLASTIC BLOCKOUT (W-BEAM)

HOLES IN POSTS AND BLOCKS TO BE 3/4" DIA.

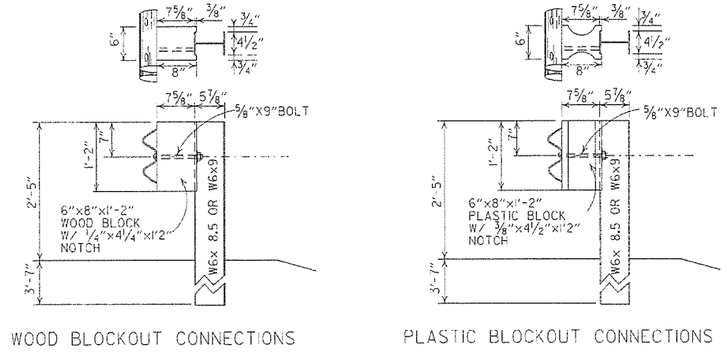

WOOD BLOCKOUT CONNECTIONS

PLASTIC BLOCKOUT CONNECTIONS

DETAILS OF STEEL LINE POST CONNECTIONS (W-BEAM)

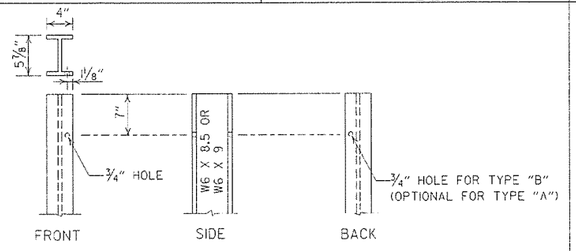

STEEL POST

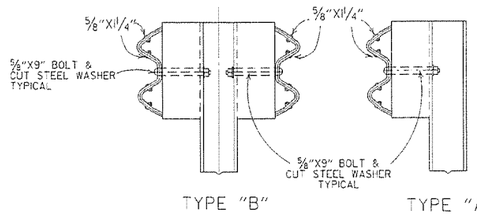

TYPE "B" TYPE "A"

DETAILS OF STEEL LINE POST CONNECTIONS (W-BEAM)

HOLES IN POSTS AND BLOCKS TO BE 3/4" DIA.

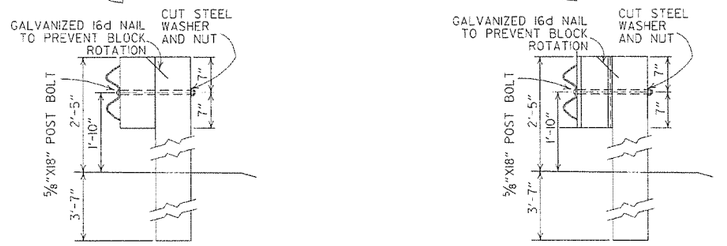

POSTS AND BLOCKS TO BE ROUGH SAWN 6"X8" WITH A TOLERANCE OF + OR - 1/4".

WOOD BLOCKOUT CONNECTIONS

PLASTIC BLOCKOUT CONNECTIONS

DETAILS OF WOOD LINE POST CONNECTIONS (W-BEAM)

-GENERAL NOTES-

ALL BOLTS SHALL BE SUFFICIENT LENGTH TO EXTEND THROUGH THE FULL THICKNESS OF THE NUT AND NO MORE THAN 3/4" BEYOND IT.

WHERE W-BEAM GUARD RAIL CONTINUES, THE INTERMEDIATE SECTIONS SHALL HAVE A POST SPACING OF 6'-3" UNLESS OTHERWISE NOTED.

W-BEAM GUARD RAIL REPRESENTING INTERMEDIATE SECTIONS WILL BE MEASURED ALONG THE ROADWAY FACE FROM CENTERLINE OF POST TO CENTERLINE OF POST.

USE W-BEAM GUARD RAIL COMPONENTS OF SAME MATERIAL FOR ENTIRE JOB. FOR EXTENSIONS OR MODIFICATION OF EXISTING GUARD RAIL, W-BEAM GUARD RAIL COMPONENTS OF THE SAME TYPE AS THOSE EXISTING SHALL BE USED.

ANY BACKFILLING UNDER OR AROUND POST SHALL BE DAMP SAND THOROUGHLY TAMPED IN PLACE.

WOOD POSTS & WOOD BLOCKS SHALL BE EITHER DENSE NO. 1 STRUCTURAL OR BETTER 9.7# (1400 f) OR NO. 1 1350 f SOUTHERN PINE.

CONTRACTOR SHALL HAVE THE OPTION OF USING WOOD BLOCKOUTS FOR W-BEAM GUARD RAIL OR PLASTIC BLOCKOUTS, AS LONG AS BLOCKOUT USED MEETS NCHRP-350 TEST LEVEL 3 SPECIFICATIONS OR REQUIREMENTS FOR MANUAL FOR ASSESSING SAFETY HARDWARE (MASH) FOR W-BEAM GUARD RAIL.

DATE	REVISION	DATE FILM
7-14-10	RAISED HEIGHT OF GUARD RAIL 1"	
10-15-09	ADDED REFERENCE TO MASH	
4-10-03	REVISED GENERAL NOTES	
8-22-02	REVISED DIMENSION ON WOOD & PLASTIC BLOCKOUT CONNECTIONS & ON STEEL POST	
11-16-01	REVISED WOOD BLOCKOUT & DETAILS OF WOOD LINE POST CONNECTIONS	
3-30-00	REMOVED GUARD RAIL AT BRIDGE ENDS	
1-12-00	ADDED PLASTIC BLOCKOUT	
8-12-98	REV. BLOCKOUTS TO WOOD. DELETED CONC. POST & REV. GENERAL NOTE. DELETED DET. OF GUARD RAIL REPLACE. BEHIND CURB & DET. OF POST PLACE. IN SOLID ROCK. & ADDED DETAILS OF STEEL LINE POST CONN. REMOVED BACK-UP PLATE, REVISED HOLES IN STEEL POLES	
4-3-97	REMOVED "LAP IN DIRECTION OF TRAFFIC" NOTE & PLACED ARROWS ON WASHERS	
10-18-96	REVISED WOOD POST NOTE	
6-2-94	ADDED ALT. STEEL POST SIZE	
8-5-93	REVISED STEEL POST SIZE	8-5-93
10-1-92	REDRAWN & REVISED	10-1-92
8-15-91	REVISED WASHER NOTE	8-8-91
8-2-90	REV. GEN. NOTE & DEPHT OF ANC. POST IN ROCK	8-2-90
7-15-88	REVISED SECTION 3 & GENERAL NOTES	
3-4-88	REV. ANCHOR POST, ELEV. NOTES & POST IN ROCK	780-3-4-88
10-30-87	REVISED WOOD LINE POST DETAIL	546-10-30-87
10-9-87	REDRAWN & REVISED	802-10-9-87

ARKANSAS STATE HIGHWAY COMMISSION

GUARD RAIL DETAILS

STANDARD DRAWING GR-8

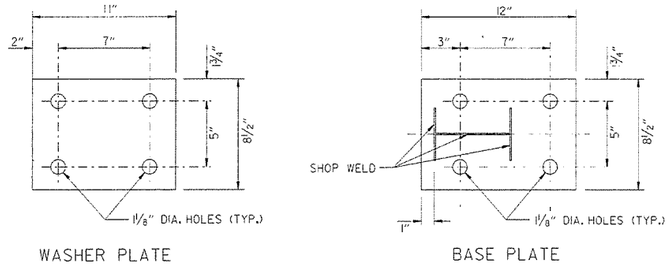

WASHER PLATE BASE PLATE

Note: Bolts, nuts, washers and plates shall be galvanized in accordance with Section 807 of the Standard Specifications.

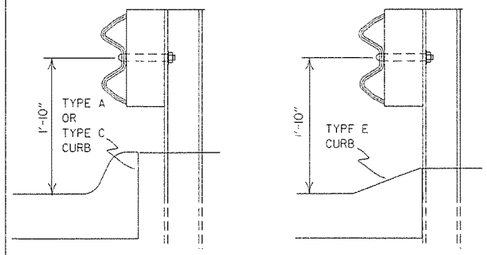

DETAIL OF GUARD RAIL PLACEMENT BEHIND CURB (W-BEAM)

FOR DESIGN SPEEDS OF 50 MPH OR LESS ALL CURB FACES, AS SHOWN ON STD. DRWG. CG-1, MAY BE USED. FOR DESIGN SPEEDS OF 55 MPH OR MORE TYPE "E" CURB FACE SHALL BE USED.

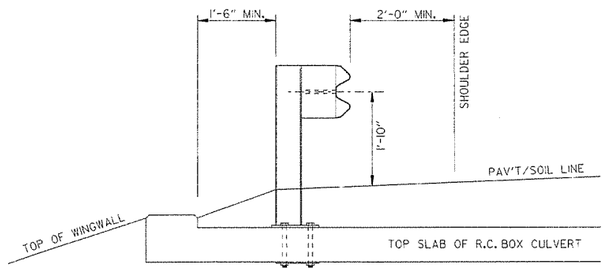

SECTION A-A

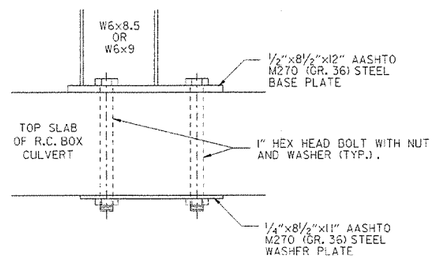

DETAIL OF CONNECTION

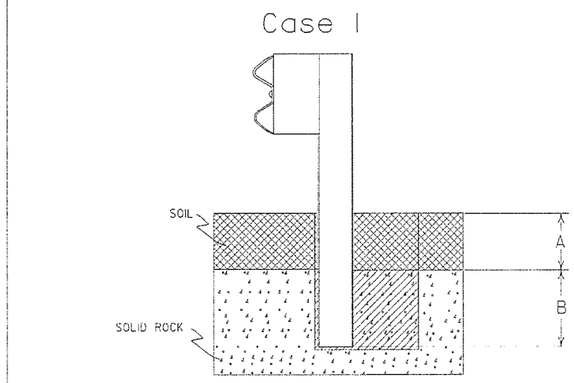

Plan View Steel Posts

Either hole configuration acceptable

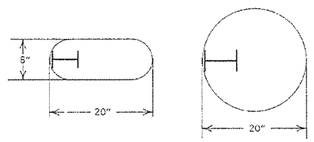

Plan View Wood Posts

Either hole configuration acceptable

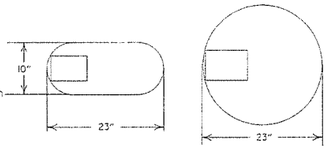

Notes: For overlying soil depths (A) ranging from 0 to 18", the depth of required drilling (B) is equal to 24".

Zone A:
Backfill according to Section 617.03(a).

Zone B:
Backfill hole in 6" lifts with material meeting the requirements of Section 802.02(c) - Alternate gradation. Compact to 95% maximum dry density per ASTM D-698.

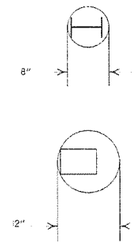

Notes: For overlying soil depths (A) ranging from 18" to 44", the depth of required drilling (B) is equal to either 12" or 44" minus the depth of soil whichever is less.

Zone A & B:
Backfill according to Section 617.03(a).

DETAIL OF POST PLACEMENT IN SOLID ROCK (W-BEAM)

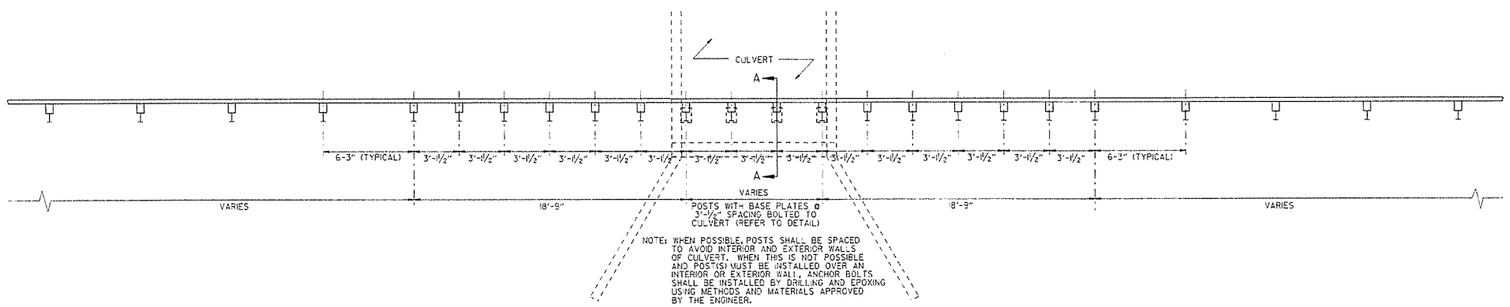

PLAN LAYOUT OF TYPE A GUARD RAIL AT LOW-FILL CULVERTS

NOTE: THIS DETAIL IS TO BE USED ONLY WHEN THE COVER OVER THE CULVERT DOES NOT PERMIT FULL EMBEDMENT OF GUARD RAIL POSTS AS SHOWN ON STD. DWG. GR-8.

DATE	REVISION	DATE FILM
7-14-10	RAISED HEIGHT OF GUARD RAIL 1"	
4-12-07	REVISED DETAIL OF GUARD RAIL PLACEMENT BEHIND CURB	
11-10-05	ADDED GUARD RAIL PLACEMENT BEHIND CURB; REVISED DETAIL OF CONNECTION	
11-18-04	REVISED POST PLACEMENT IN ROCK & CULVERT CONNECTION DETAILS. ADDED DETAIL FOR GUARD RAIL PLACEMENT AT LOW-FILL CULVERTS	
3-30-00	REMOVED CONCRETE INSERT ANCHOR	
8-12-98	CHANGED STEEL SPACER BLOCK TO WOOD BLOCKOUT, ADD. DET. OF GUARD RAIL CONNECTION TO R.C. BOX CULVT. DELETED DET. OF STEEL LINE POST CONN.& ADDED DET. OF GUARD RAIL PLACE. BEHIND CURB & DET. OF POST PLACE. IN SOLID ROCK	
4-3-96	PLACED ARROWS AT CUT STEEL WASHERS	4-3-96
10-18-96	REV. ASTM REF. TO AASHTO	
11-22-95	ADDED OPTIONAL HOLES	
6-2-94	REVISED ALTERNATE POST SIZE	
8-5-93	REVISED STEEL POST SIZE	
10-1-92	REDRAWN & REVISED	10-1-92
8-2-90	DEL. WASHER ON ANCHOR ASSEMBLY	8-2-90
7-15-88	CONFORMED TO 1988 SPECS	
3-4-88	REVISED ANCHOR NOTE	
10-30-87	REVISED ANCHOR ASSEMBLY	712-10-30-87
10-30-87	REVISED PLACEMENT BEHIND CURB	547-10-30-87
10-9-87	REDRAWN & REVISED	803-10-9-87

ARKANSAS STATE HIGHWAY COMMISSION

GUARD RAIL DETAILS

STANDARD DRAWING GR-8A

NOTE: GUARD RAIL WITH GUARD RAIL TERMINAL (TYPE I) TO BE INSTALLED ONLY AT LOCATIONS SHOWN ON PLANS.

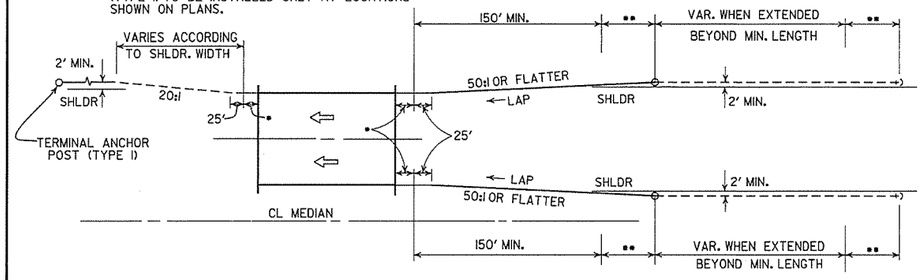

ONE-WAY TRAFFIC

••• LAP OF GUARD RAIL SHALL BE AS SHOWN FOR A DISTANCE OF UP TO 200', CHANGE TO LAP IN DIRECTION OF TRAVEL.

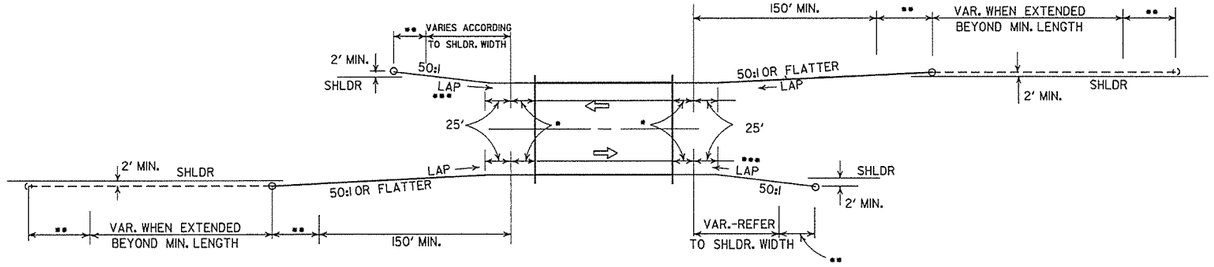

TWO-WAY TRAFFIC

METHODS OF INSTALLATION OF GUARD RAIL AT LESS THAN FULL SHOULDER WIDTH BRIDGES USING GUARD RAIL TERMINAL (TYPE 2)

••• LAP OF GUARD RAIL SHALL BE AS SHOWN FOR A DISTANCE OF UP TO 200', CHANGE TO LAP IN DIRECTION OF TRAVEL.

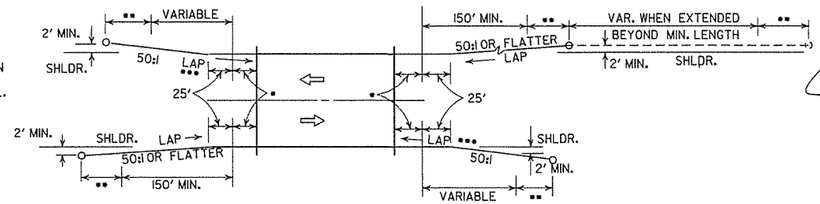

TWO-WAY TRAFFIC

NOTE: GUARD RAIL WITH GUARD RAIL TERMINAL (TYPE I) TO BE INSTALLED ONLY AT LOCATIONS SHOWN ON PLANS.

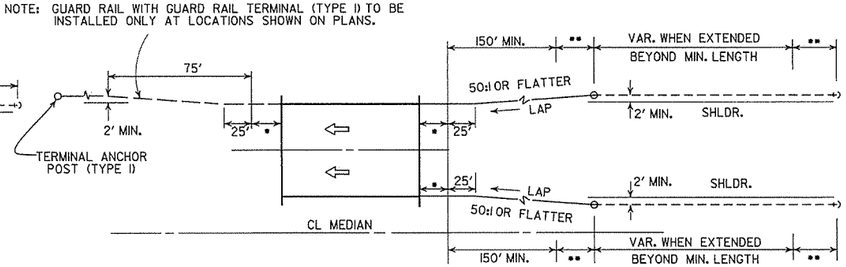

ONE-WAY TRAFFIC

METHOD OF INSTALLATION OF GUARD RAIL AT FULL SHOULDER WIDTH BRIDGES USING GUARD RAIL TERMINAL (TYPE 2)

••• LAP OF GUARD RAIL SHALL BE AS SHOWN FOR A DISTANCE OF UP TO 200', CHANGE TO LAP IN DIRECTION OF TRAVEL.

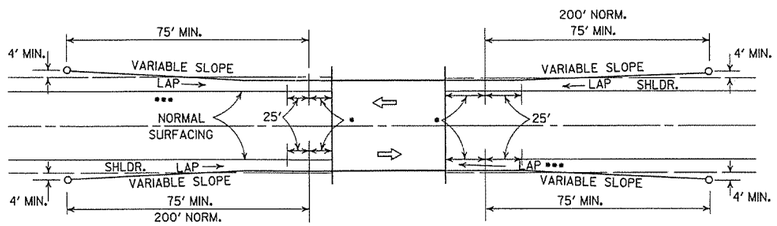

LEGEND

- • THRIE BEAM GUARD RAIL TERMINAL
- •• GUARD RAIL TERMINAL (TYPE 2)

METHOD OF INSTALLATION OF GUARD RAIL USING GUARD RAIL TERMINAL (TYPE I) (FULL SHOULDER WIDTH OR LESS BRIDGES)

DATE	REVISION	DATE FILM
4-17-08	REVISED LAYOUTS	
11-10-05	REMOVED GUARD RAIL NOTES AND DETAILS	
11-16-01	DELETED NOTE-METHOD OF INSTALLATION OF GUARD RAIL USING GUARD RAIL TERM. (TY. I)	
1-12-00	ADDED CONSTRUCTION NOTE	1-12-00
6-26-97	REVISED LAYOUT	
10-1-92	REDRAWN & REVISED	10-1-92
	ADDED NOTE	
10-9-87	REDRAWN & REVISED	

ARKANSAS STATE HIGHWAY COMMISSION

GUARD RAIL DETAILS

STANDARD DRAWING GR-9

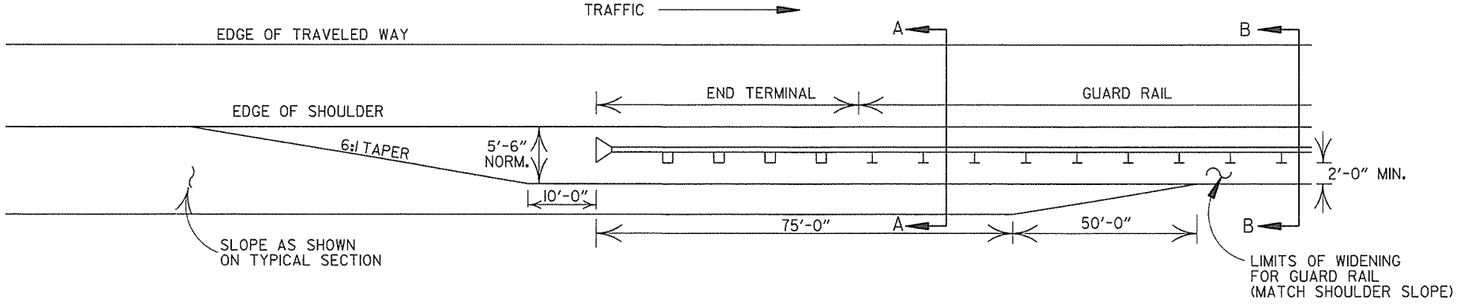

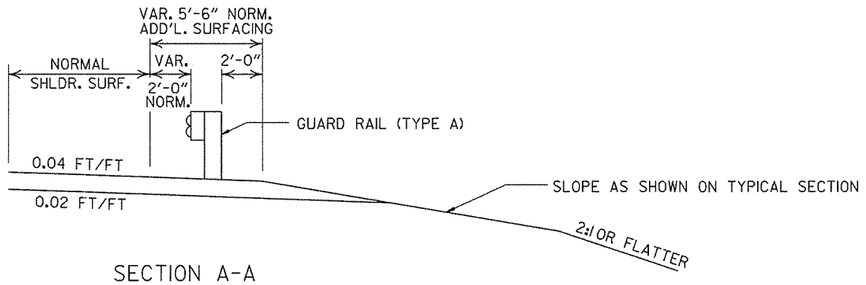

SECTION A-A

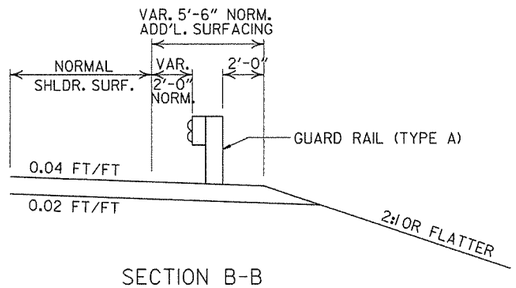

SECTION B-B

DETAILS OF WIDENING FOR GUARD RAIL

NOTE: NORMAL SECTION TO BE WIDENED APPROX. 5'-6" EACH SIDE TO SUPPORT GUARD RAIL.

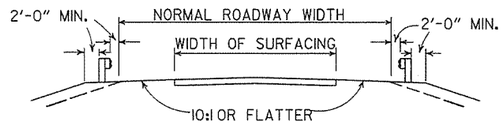

SECTION ON TANGENT

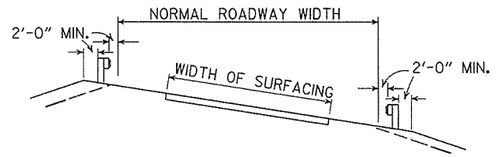

SECTION ON CURVE

DETAILS SHOWING POSITION OF GUARD RAIL ON HIGHWAY

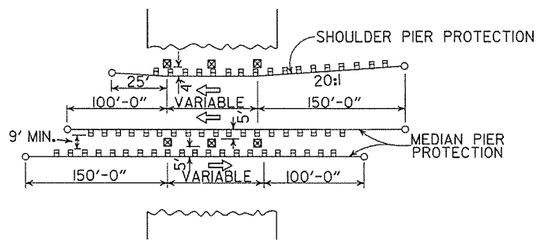

METHOD OF INSTALLATION OF GUARD RAIL AT FIXED OBSTACLE

DATE	REVISION	DATE FILM
4-17-08	MINOR REVISION	
11-10-05	DRAWN	

ARKANSAS STATE HIGHWAY COMMISSION

GUARD RAIL DETAILS

STANDARD DRAWING GR-9A

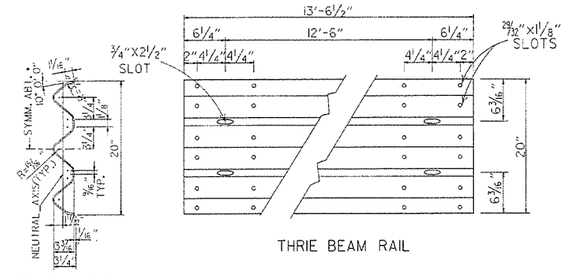

THRIE BEAM RAIL

SECTION THRU THRIE BEAM RAIL

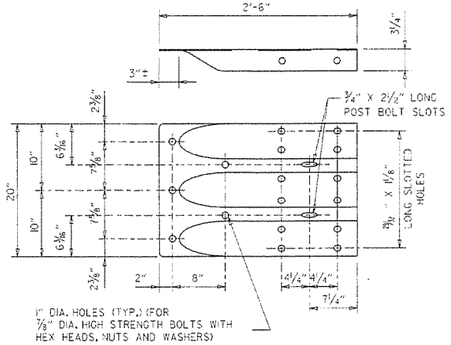

1" DIA. HOLES (TYP.) (FOR ⅞" DIA. HIGH STRENGTH BOLTS WITH HEX HEADS, NUTS AND WASHERS)

SPECIAL END SHOE

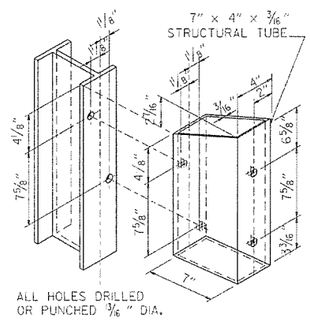

ATTACH BLOCKOUT TO POST USING ⅝" DIA. HEX HEAD BOLTS WITH 1½" O.D. CUT STEEL WASHERS AND NUT.

ALL HOLES DRILLED OR PUNCHED ⅜" DIA.

STRUCTURAL STEEL TUBING BLOCKOUT DETAIL

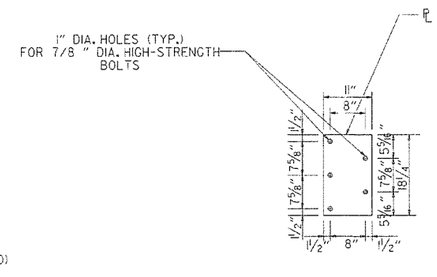

CONNECTOR PLATE

CONNECTOR PLATE SHALL BE AASHTO M270, GR. 36 AND SHALL BE GALVANIZED AFTER FABRICATION. GALVANIZING SHALL CONFORM TO SUBSECTION 807.19 OF THE STANDARD SPECIFICATIONS. CONNECTOR PLATE TO BE BOLTED TO SPECIAL END SHOE USING ⅞" DIA. HIGH STRENGTH BOLTS, WITH THE HEADS PLACED ON THE TRAFFIC FACE. WASHERS SHALL BE USED UNDER THE HEAD AND NUT. BOLTS, NUTS AND WASHERS SHALL BE GALVANIZED AND SHALL CONFORM TO SUBSECTION 807.06.

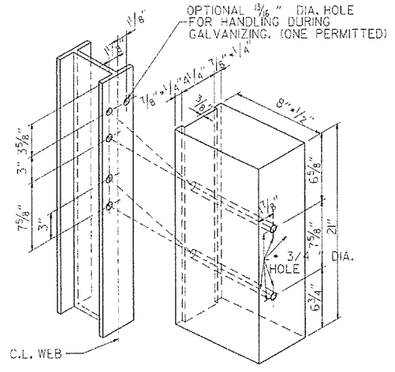

ALL HOLES 13/16" DIAMETER EXCEPT AS NOTED

HOLE PUNCHING DETAIL FOR STEEL POST & WOOD OR PLASTIC BLOCKOUTS

NOTE: BLOCKS SHALL BE THE SAME TYPE THROUGHOUT THE PROJECT LIMITS.

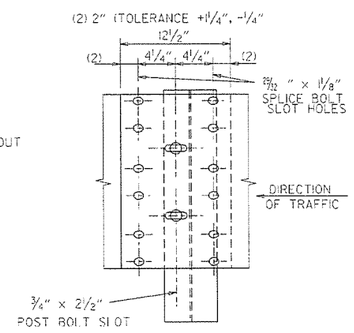

THRIE BEAM RAIL SPLICE AT POST

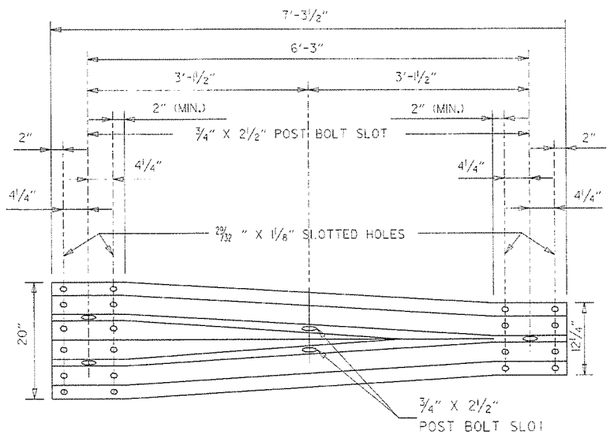

TRANSITION SECTION

NOTE:
SEE STANDARD DRAWING GR-10A FOR GUARD RAIL POST EMBEDMENT DEPTHS.

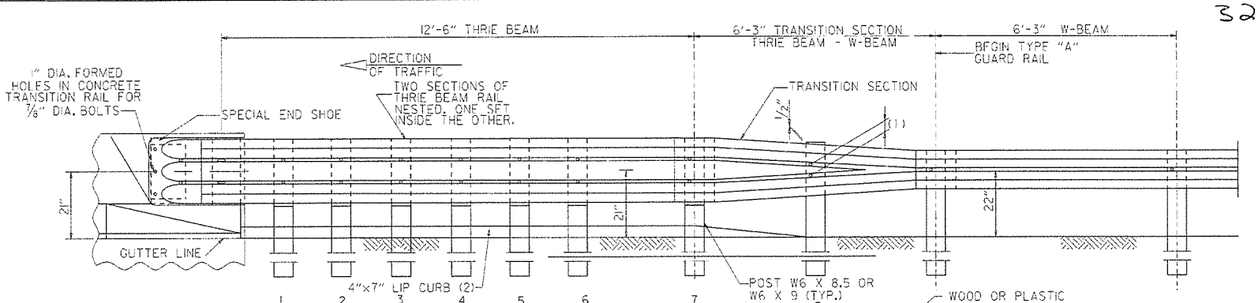

ELEVATION

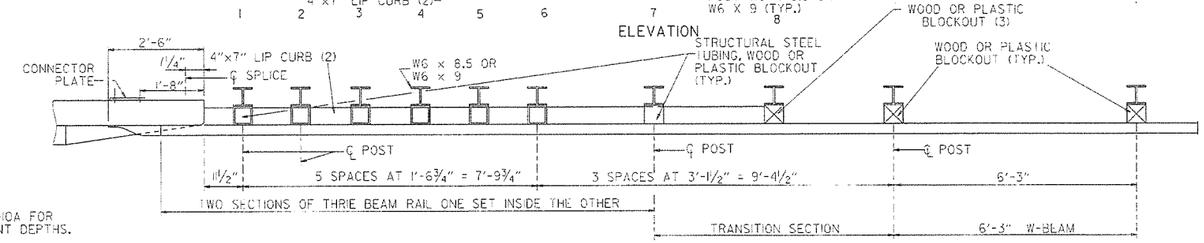

PLAN

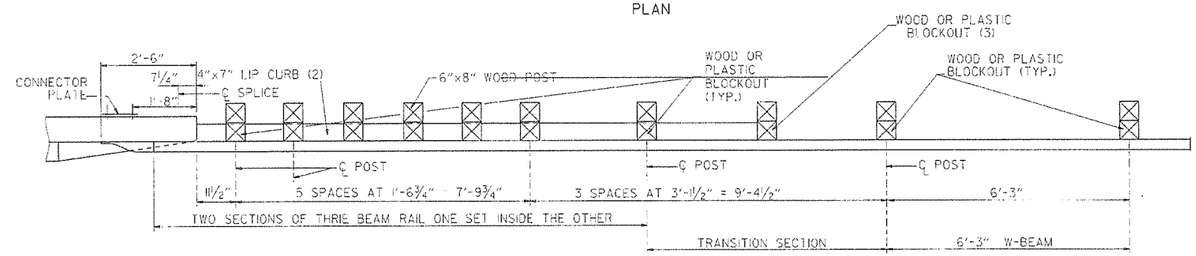

PLAN

(1) VERIFY BOLT SPACING FROM RAIL TRANSITION PRODUCER.
(2) REFER TO APPROACH GUTTER DETAILS.
(3) LENGTH OF BLOCKOUT ON POST 8 TO BE MODIFIED TO FIT RAIL WIDTH.

THRIE BEAM GUARD RAIL CONNECTION AT BRIDGE ENDS

GENERAL NOTES:

THE THRIE BEAM RAIL, SPECIAL END SHOE, AND THE TRANSITION SECTION SHALL BE MADE OF STEEL AND SHALL BE 12 GAGE. ZINC COATING SHALL BE TYPE II.

RAIL POSTS SHALL BE SET PERPENDICULAR TO THE ROADWAY PROFILE GRADE AND VERTICALLY IN CROSS SECTION.

ALL BOLTS SHALL BE SUFFICIENT LENGTH TO EXTEND THROUGH THE FULL THICKNESS OF THE NUT AND NO MORE THAN ¾" BEYOND IT.

ALL LAP SPLICES, INCLUDING SPECIAL END SHOES, SHALL BE MADE IN THE DIRECTION SHOWN ON STANDARD DRAWINGS GR-9 & GR-11.

WOOD POSTS & WOOD BLOCKS SHALL BE EITHER DENSE NO. 1 STRUCTURAL OR BETTER 9.7# (1400 #) OR NO. 1 1350 f SOUTHERN PINE.

REFER TO STD. DRWG. GR-10A FOR POST DETAILS.

USE THRIE BEAM GUARD RAIL COMPONENTS OF SAME MATERIAL FOR ENTIRE JOB.

THRIE BEAM POSTS SHALL BE SAME MATERIAL AS W-BEAM POSTS FOR ENTIRE JOB.

DATE	REVISION	DATE FILM
7-14-10	RAISED HEIGHT OF W-BEAM 1"	
11-29-07	ADDED PLASTIC BLOCKOUTS	
11-10-05	ADDED NOTE FOR ATTACHING STEEL BLOCKOUT	
11-18-04	REVISED GENERAL NOTES	
10-9-03	REVISED GENERAL NOTES	
4-10-03	REVISED GENERAL NOTES	
8-22-02	REVISED NOTE (2)	
6-29-00	MOVED DIMENSION LINES	
5-18-00	ADDED NOTE	
3-30-00	DRAWN & ISSUED	

ARKANSAS STATE HIGHWAY COMMISSION

GUARD RAIL DETAILS

STANDARD DRAWING GR-10

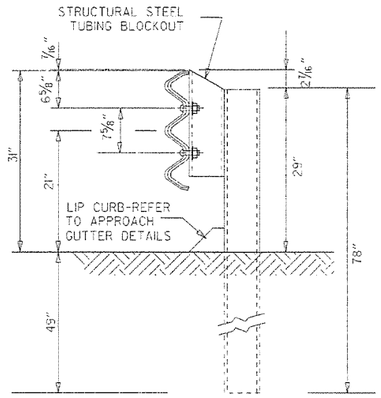

THRIE BEAM RAIL WITH STEEL TUBING BLOCKOUT
AND STEEL POST
POSTS 1-7

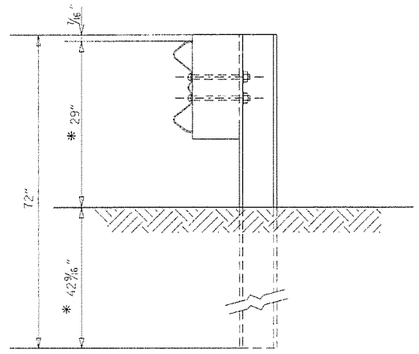

W-BEAM TO THRIE BEAM TRANSITION RAIL
WITH WOOD OR PLASTIC BLOCKOUT AND STEEL POST
POST 8

* NOTE:
THESE DIMENSIONS WILL NEED TO BE ADJUSTED IN THE FIELD TO MAKE THE TRANSITION FROM 21" MID POINT OF THRIE BEAM TO 22" MID POINT OF W-BEAM.

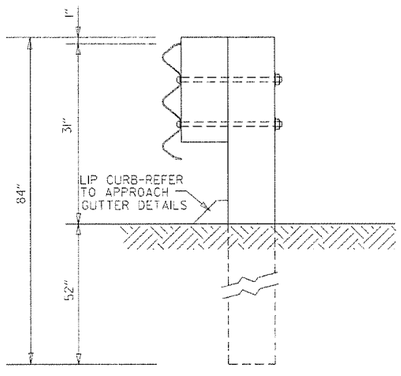

THRIE BEAM RAIL
WITH WOOD OR PLASTIC
BLOCKOUTS & WOOD POSTS
POSTS 1-6

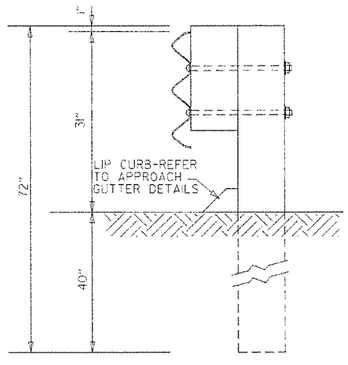

THRIE BEAM RAIL
WITH WOOD OR PLASTIC
BLOCKOUT & WOOD POST
POST 7

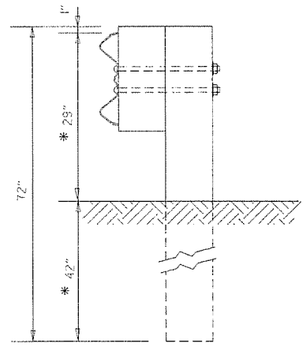

W-BEAM TO THRIE BEAM
TRANSITION RAIL WITH WOOD OR
PLASTIC BLOCKOUT & WOOD POST
POST 8

GENERAL NOTES:

RAIL POSTS SHALL BE SET PERPENDICULAR TO THE ROADWAY PROFILE GRADE AND VERTICALLY IN CROSS SECTION.

WOOD POSTS & WOOD BLOCKS SHALL BE EITHER DENSE NO. 1 STRUCTURAL OR BETTER 9.7 f (1400 f) OR NO. 1 1350 f SOUTHERN PINE.

DATE	REVISION	DATE FILM
7-14-10	REVISED POST & DIMENSIONS	
11-29-07	ADDED PLASTIC BLOCKOUTS	
8-22-02	REVISED LIP CURB NOTE	
3-30-00	DRAWN & ISSUED	

ARKANSAS STATE HIGHWAY COMMISSION

GUARD RAIL DETAILS

STANDARD DRAWING GR-10A

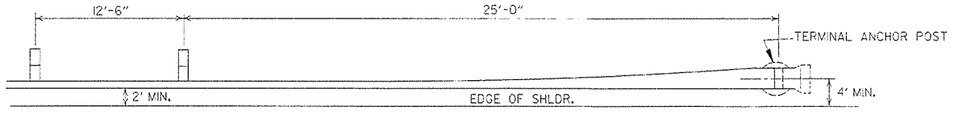

PLAN - GUARD RAIL TERMINAL (TYPE I)

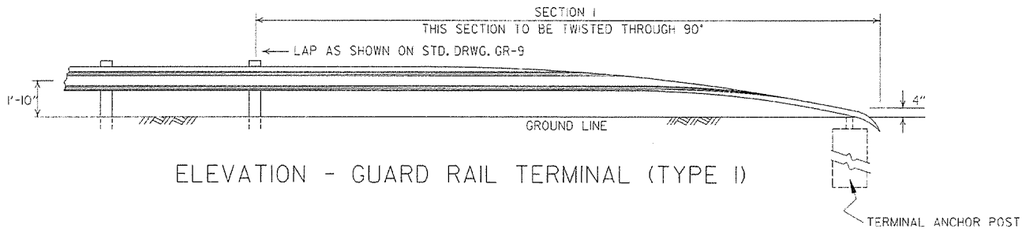

ELEVATION - GUARD RAIL TERMINAL (TYPE I)

NOTE:
SECTIONS 1 AND 2 OF GUARD RAIL TERMINAL SHALL BE PAID FOR AT THE PRICE BID PER LINEAR FOOT OF THE TYPE OF GUARD RAIL SPECIFIED.

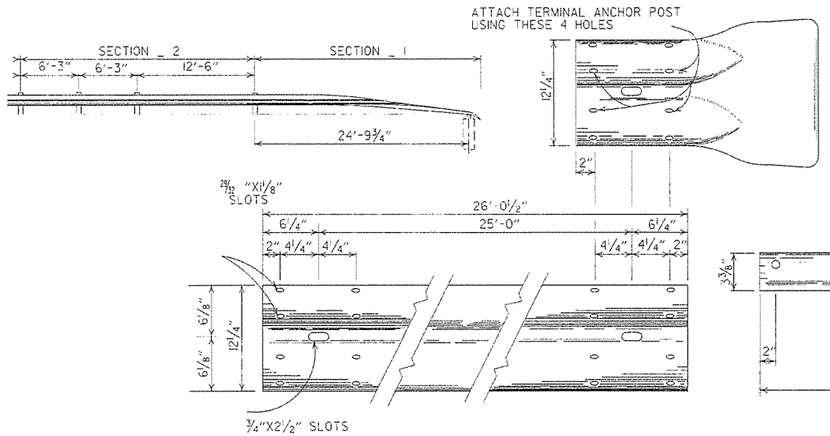

SECTION 1

TERMINAL SECTION

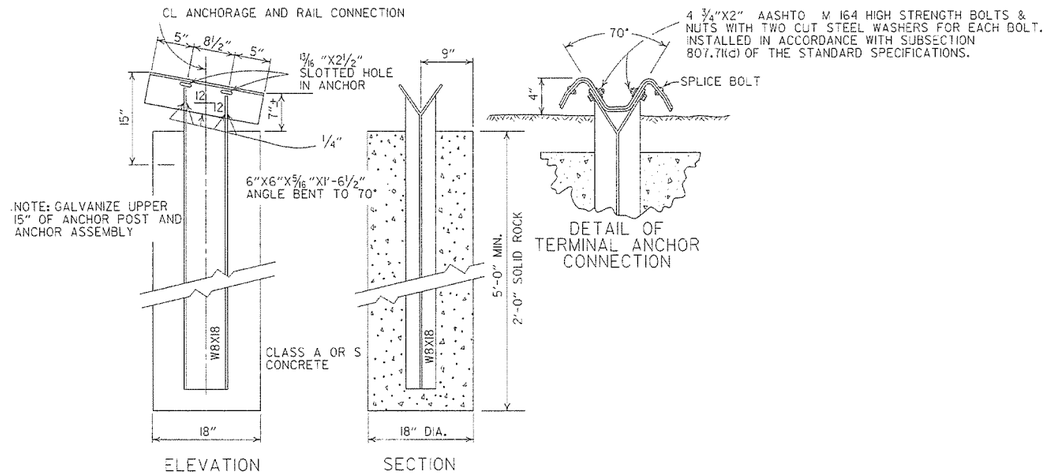

NOTE: RAIL MEMBERS MAY BE BOLTED TO ANGLE AT TERMINAL ANCHOR AND THE TWO ASSEMBLIES POSITIONED TO PROPER ALIGNMENT PRIOR TO PLACING CONCRETE AROUND 8 WF 17 POST IF CONTRACTOR SO DESIRES.

DETAIL OF TERMINAL ANCHOR POST (TYPE I)

DATE	REVISION	DATE FILM
7-14-10	RAISED HEIGHT OF GUARD RAIL 1"	
6-26-97	REVISED LAP NOTE	
10-18-96	REVISED ASTM REF. TO AASHTO	
11-3-94	DIMENSION TERMINAL DETAIL	
11-11-92	ADDED NOTE FOR PAYMENT	11-11-92
10-1-92	DRAWN & ISSUED	10-1-92

ARKANSAS STATE HIGHWAY COMMISSION

GUARD RAIL DETAILS

STANDARD DRAWING GRT-1

REINFORCED CONCRETE ARCH PIPE DIMENSIONS

EQUIV. DIA.	SPAN		RISE	
	AASHTO M 206	AHTD NOMINAL	AASHTO M 206	AHTD NOMINAL
INCHES	INCHES			
15	18	18	11	11
18	22	22	13½	14
21	26	26	15½	16
24	28½	29	18	18
30	36¼	36	22½	23
36	43⅜	44	26⅝	27
42	51⅛	51	31 5/16	31
48	58½	59	36	36
54	65	65	40	40
60	73	73	45	45
72	88	88	54	54
84	102	102	62	62
90	115	115	72	72
96	122	122	77½	77
108	138	138	87⅛	87
120	154	154	96⅞	97
132	168¾	169	106½	107

THE MEASURED SPAN AND RISE SHALL NOT VARY MORE THAN ± 2 PERCENT FROM THE VALUES SPECIFIED BY AASHTO M206.

REINFORCED CONCRETE HORIZONTAL ELLIPTICAL PIPE DIMENSIONS

EQUIV. DIA.	AASHTO M 207	
	SPAN	RISE
INCHES	INCHES	
18	23	14
24	30	19
27	34	22
30	38	24
33	42	27
36	45	29
39	49	32
42	53	34
48	60	38
54	68	43
60	76	48
66	83	53
72	91	58
78	98	63
84	106	68

THE MEASURED SPAN AND RISE SHALL NOT VARY MORE THAN ± 2 PERCENT FROM THE VALUES SPECIFIED BY AASHTO M207.

CONSTRUCTION SEQUENCE

1. PLACE STRUCTURAL BEDDING MATERIAL TO GRADE. DO NOT COMPACT.
2. INSTALL PIPE TO GRADE.
3. COMPACT STRUCTURAL BEDDING OUTSIDE THE MIDDLE THIRD OF THE PIPE.
4. PLACE AND COMPACT THE HAUNCH AREA UP TO THE MIDDLE OF THE PIPE.
5. COMPLETE BACKFILL ACCORDING TO SUBSECTION 606.03.(f)(1).

NOTE: HAUNCH AND STRUCTURAL BEDDING MATERIAL WILL NOT BE PAID FOR SEPARATELY, BUT COMPENSATION WILL BE CONSIDERED TO BE INCLUDED IN THE PRICE BID PER LINEAR FOOT OF CONCRETE PIPE.

- LEGEND -

D_1 = NORMAL INSIDE DIAMETER OF PIPE
D_o = OUTSIDE DIAMETER OF PIPE
H = FILL COVER HEIGHT OVER PIPE (FEET)
MIN. = MINIMUM
= UNDISTURBED SOIL

INSTALLATION TYPE	MATERIAL REQUIREMENTS FOR HAUNCH AND STRUCTURAL BEDDING
TYPE 1	AGGREGATE BASE COURSE (CLASS 5 OR CLASS 7)
TYPE 2	SELECTED MATERIALS (CLASS SM-1, SM-2, OR SM-4) OR TYPE 1 INSTALLATION MATERIAL*
TYPE 3**	AASHTO CLASSIFICATION A-1 THRU A-6 SOIL OR TYPE 1 OR 2 INSTALLATION MATERIAL

* SM-3 WILL NOT BE ALLOWED.

** MATERIALS SHALL NOT INCLUDE ORGANIC MATERIALS OR STONES LARGER THAN 3 INCHES.

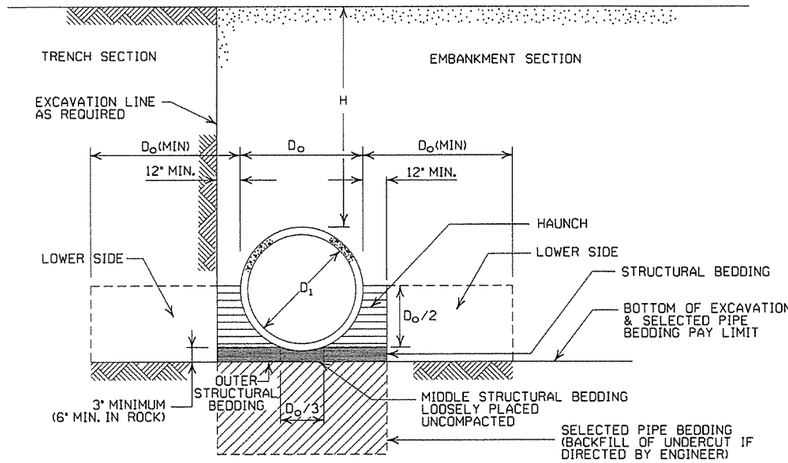

EMBANKMENT AND TRENCH INSTALLATIONS

1. MATERIAL IN THE HAUNCH AND OUTER STRUCTURAL BEDDING SHALL BE COMPACTED TO 95% OF THE MAXIMUM DENSITY ACCORDING TO THE TYPE OR CLASS OF MATERIAL USED.
2. FOR TRENCHES WITH WALLS OF NATURAL SOIL, THE DENSITY OF THE SOIL IN THE LOWER SIDE ZONE SHALL BE AS FIRM AS THE 95% DENSITY REQUIRED FOR THE HAUNCH. IF THE EXISTING SOIL DOES NOT MEET THIS CRITERIA, IT SHALL BE REMOVED AND RECOMPACTED TO 95% OF THE MAXIMUM DENSITY ACCORDING TO THE TYPE OF MATERIAL USED.
3. FOR EMBANKMENTS, THE MATERIAL IN THE LOWER SIDE ZONE SHALL BE COMPACTED TO 95% OF THE MAXIMUM DENSITY ACCORDING TO THE TYPE OR CLASS OF MATERIAL USED.

GENERAL NOTES

1. CONCRETE PIPE CULVERT CONSTRUCTION SHALL CONFORM TO ARKANSAS STATE HIGHWAY AND TRANSPORTATION DEPARTMENT STANDARD SPECIFICATIONS FOR HIGHWAY CONSTRUCTION (CURRENT EDITION), WITH APPLICABLE SUPPLEMENTAL SPECIFICATIONS AND SPECIAL PROVISIONS. UNLESS OTHERWISE NOTED IN THE PLANS, SECTION AND SUBSECTION REFER TO THE STANDARD CONSTRUCTION SPECIFICATIONS.
2. CONCRETE PIPE CULVERT DESIGN SHALL CONFORM TO AASHTO LRFD BRIDGE DESIGN SPECIFICATIONS, FIFTH EDITION (2010) WITH 2010 INTERIMS.
3. ALL PIPE SHALL CONFORM TO SECTION 606. CIRCULAR R.C. PIPE CULVERTS SHALL CONFORM TO AASHTO M170, R.C. ARCH PIPE CULVERTS SHALL CONFORM TO AASHTO M206 AND HORIZONTAL ELLIPTICAL PIPE CULVERTS SHALL CONFORM TO AASHTO M207.
4. ALL PIPE SHALL BE PROTECTED DURING CONSTRUCTION BY A COVER SUFFICIENT TO PREVENT DAMAGE FROM PASSAGE OF EQUIPMENT.
5. THE MINIMUM TRENCH WIDTH SHALL BE THE OUTSIDE DIAMETER OF THE PIPE PLUS 24 INCHES. THE MAXIMUM ALLOWABLE TRENCH WIDTH SHALL BE THE MINIMUM WIDTH PRACTICABLE FOR WORKING CONDITIONS.
6. MULTIPLE PIPE CULVERTS SHALL BE INSTALLED WITH A MINIMUM CLEARANCE OF 24 INCHES BETWEEN STRINGS OF PIPE. REFER TO STD. DWG. FES-2 FOR MINIMUM CLEARANCE WHERE FLARED END SECTIONS ARE USED.
7. IMPERVIOUS MATERIAL SHOULD BE PLACED AS DIRECTED BY THE ENGINEER AT THE ENDS OF THE CULVERT TO PREVENT LOSS OF STRUCTURAL BEDDING WHEN PERVIOUS MATERIAL IS USED FOR STRUCTURAL BEDDING AND/OR BACKFILL.
8. NOT MORE THAN ONE LIFTING HOLE MAY BE PROVIDED IN CONCRETE PIPE TO FACILITATE HANDLING. HOLE MAY BE CAST IN PLACE, CUT INTO THE FRESH CONCRETE AFTER FORMS ARE REMOVED, OR DRILLED. THE HOLE SHALL NOT BE MORE THAN TWO INCHES IN DIAMETER OR TWO INCHES SQUARE. CUTTING OR DISPLACEMENT OF REINFORCEMENT WILL NOT BE PERMITTED. SPALLED AREAS AROUND THE HOLE SHALL BE REPAIRED IN A WORKMANLIKE MANNER. LIFTING HOLE SHALL BE FILLED WITH MORTAR, CONCRETE, OR OTHER METHOD AS APPROVED BY THE ENGINEER.
9. WHEN DIRECTED BY THE ENGINEER, UNSUITABLE MATERIAL THAT IS ENCOUNTERED AT THE BOTTOM OF THE EXCAVATED TRENCH (BELOW THE AREA IDENTIFIED AS "STRUCTURAL BEDDING" ABOVE) WILL BE EXCAVATED AND REPLACED WITH SELECTED PIPE BEDDING. THE QUANTITY OF MATERIAL REQUIRED TO BACKFILL THE UNDERCUT AREA UP TO THE SELECTED PIPE BEDDING PAY LIMIT DESIGNATED ABOVE WILL BE MEASURED AND PAID FOR AS "SELECTED PIPE BEDDING."
10. WHEN THE EXISTING MATERIAL EXCAVATED FOR THE PIPE TRENCH IS DETERMINED BY THE ENGINEER TO BE UNSUITABLE FOR BACKFILLING THE PIPE (ABOVE THE AREA IDENTIFIED ABOVE AS THE HAUNCH), BORROW MATERIAL OR MATERIAL FROM THE ROADWAY EXCAVATION WILL BE USED TO BACKFILL THE PIPE. IF SUITABLE MATERIAL IS NOT AVAILABLE, THE ENGINEER MAY AUTHORIZE THE USE OF "SELECTED PIPE BACKFILL."

MINIMUM HEIGHT OF FILL "H" OVER CIRCULAR R.C. PIPE CULVERTS

	CLASS OF PIPE			
	CLASS III		CLASS IV	CLASS V
INSTALLATION TYPE	TYPE 1 OR 2	TYPE 3	ALL	ALL
PIPE ID (IN.)	FEET			
12-15	2	2.5	2	1
18-24	2.5	3	2	1
27-33	3	4	2	1
36-42	3.5	5	2	1
48	4.5	5.5	2	1
54-60	5	7	2	1
66-78	6	8	2	1
84-108	7.5	8	2	1

NOTE: FOR MINIMUM COVER VALUES, "H" SHALL INCLUDE A MINIMUM OF 12" OF PAVEMENT AND/OR BASE.

MAXIMUM HEIGHT OF FILL "H" OVER CIRCULAR R.C. PIPE CULVERTS

INSTALLATION TYPE	CLASS OF PIPE		
	CLASS III	CLASS IV	CLASS V
	FEET		
TYPE 1	21	32	50
TYPE 2	16	25	39
TYPE 3	12	20	30

NOTE: IF FILL HEIGHT EXCEEDS 50 FEET, A SPECIAL DESIGN CONCRETE PIPE WILL BE REQUIRED USING TYPE 1 INSTALLATION.

MINIMUM HEIGHT OF FILL "H" OVER R.C. ARCH & HORIZONTAL ELLIPTICAL PIPE CULVERTS

INSTALLATION TYPE	CLASS OF PIPE	
	CLASS III	CLASS IV
	FEET	
TYPE 2 OR TYPE 3	2.5	1.5

NOTE: TYPE 1 INSTALLATION WILL NOT BE ALLOWED FOR ARCH & HORIZONTAL ELLIPTICAL PIPE CULVERTS.

NOTE: FOR MINIMUM COVER VALUES, "H" SHALL INCLUDE A MINIMUM OF 12" OF PAVEMENT AND/OR BASE.

MAXIMUM HEIGHT OF FILL "H" OVER R.C. ARCH & HORIZONTAL ELLIPTICAL PIPE CULVERTS

INSTALLATION TYPE	CLASS OF PIPE	
	CLASS III	CLASS IV
	FEET	
TYPE 2	13	21
TYPE 3	10	16

NOTE: TYPE 1 INSTALLATION WILL NOT BE ALLOWED FOR ARCH & HORIZONTAL ELLIPTICAL PIPE CULVERTS.

DATE	REVISION	DATE FILMED
2-27-14	REVISED GENERAL NOTE 1.	
12-15-11	REVISED FOR LRFD DESIGN SPECIFICATIONS	
5-18-00	REVISED TYPE 3 BEDDING & ADDED NOTE	
3-30-00	REVISED INSTALLATIONS	
11-06-97	ISSUED	

ARKANSAS STATE HIGHWAY COMMISSION

CONCRETE PIPE CULVERT FILL HEIGHTS & BEDDING

STANDARD DRAWING PCC-1

CORRUGATED STEEL PIPE (ROUND)

PIPE DIAMETER (INCHES)	① MINUMUM COVER TOP OF PIPE TO TOP OF GROUND "H" (FEET)	MAX. FILL HEIGHT "H" ABOVE TOP OF PIPE (FEET)				
		METAL THICKNESS (INCHES)				
		0.064	0.079	0.109	0.138	0.168
2⅔ INCH BY ½ INCH CORRUGATION RIVETED, WELDED, OR HELICAL LOCK-SEAM						
12	1	84	91			
15	1	67	73			
18	1	56	61			
24	1	42	46	59		
30	2	34	36	47		
36	2		30	39	41	
42	2		43	67	70	73
48	2		37	58	61	64
② 3 INCH BY 1 INCH OR 5 INCH BY 1 INCH CORRUGATION RIVETED, WELDED, BOLTED, OR HELICAL LOCK-SEAM						
36	1	48	60	88	111	118
42	1	41	51	72	90	102
48	1	36	45	64	77	85
54	2	32	40	59	71	79
60	2	29	36	53	64	71
66	2	26	33	47	58	64
72	2	24	30	44	53	59
78	2		28	41	49	54
84	2		26	38	45	51
90	2		24	35	43	45
96	2		22	33	40	44
102	2			31	38	42
108	2			30	35	39
114	2			28	34	37
120	2			27	32	35

CORRUGATED ALUMINUM PIPE (ROUND)

PIPE DIAMETER (INCHES)	① MINUMUM COVER TOP OF PIPE TO TOP OF GROUND "H" (FEET)	MAX. FILL HEIGHT "H" ABOVE TOP OF PIPE (FEET)				
		METAL THICKNESS IN INCHES				
		0.060	0.075	0.105	0.135	0.164
		2 ⅔ INCH BY ½ INCH CORRUGATION RIVETED OR HELICAL LOCK-SEAM				
12	1	45	45			
18	2	30	30	52		
24	2	22	22	39	41	
30	2		18	31	32	34
36	2.5		15	26	27	28
42	2			43	43	44
48	2			40	41	43
54	2			35	37	38
60	2				33	34
66	2					31
72	2					29

CONSTRUCTION SEQUENCE

1. PLACE STRUCTURAL BEDDING MATERIAL TO GRADE. DO NOT COMPACT.
2. INSTALL PIPE TO GRADE.
3. COMPACT STRUCTURAL BEDDING OUTSIDE THE MIDDLE THIRD OF THE PIPE.
4. COMPLETE STRUCTURAL BACKFILL OPERATION BY WORKING FROM SIDE TO SIDE OF THE PIPE. THE SIDE TO SIDE STRUCTURAL BACKFILL DIFFERENTIAL SHALL NOT EXCEED 24 INCHES OR 1/3 THE SIZE OF THE PIPE, WHICHEVER IS LESS.

NOTE: STRUCTURAL BACKFILL AND STRUCTURAL BEDDING MATERIAL WILL NOT BE PAID FOR SEPARATELY, BUT COMPENSATION WILL BE CONSIDERED TO BE INCLUDED IN THE PRICE BID PER LINEAR FOOT OF METAL PIPE.

INSTALLATION TYPE	MATERIAL REQUIREMENTS FOR STRUCTURAL BACKFILL AND STRUCTURAL BEDDING
TYPE 1	AGGREGATE BASE COURSE (CLASS 4, 5, 6, OR 7)
TYPE 2	SELECTED MATERIALS (CLASS SM-1, SM-2, OR SM-4) OR TYPE 1 INSTALLATION MATERIAL ③

③ SM-3 WILL NOT BE ALLOWED.

EQUIVALENT METAL THICKNESSES AND GAUGES

METAL THICKNESS IN INCHES			GAUGE NUMBER
STEEL			
ZINC COATED	UNCOATED	ALUMINUM	
0.064	0.0598	0.060	16
0.079	0.0747	0.075	14
0.109	0.1046	0.105	12
0.138	0.1345	0.135	10
0.168	0.1644	0.164	8

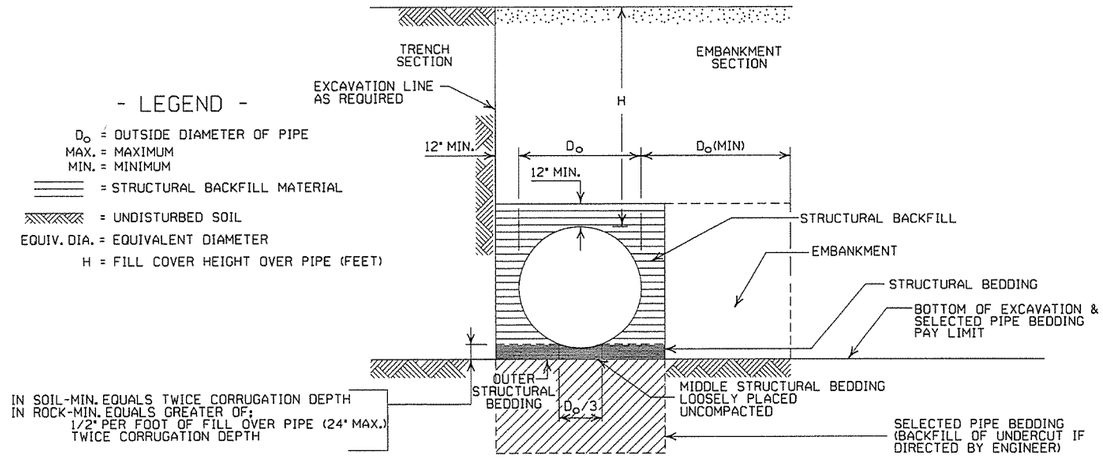

EMBANKMENT AND TRENCH INSTALLATIONS

1. STRUCTURAL BACKFILL, EMBANKMENT, AND OUTER STRUCTURAL BEDDING MATERIAL SHALL BE COMPACTED TO 95% OF THE MAXIMUM DENSITY ACCORDING TO THE TYPE OR CLASS OF MATERIAL USED.
2. INSTALLATION TYPE 1 OR 2 MAY BE USED FOR CORRUGATED STEEL OR ALUMINUM PIPE (ROUND).
3. INSTALALTION TYPE 1 SHALL BE USED FOR CORRUGATED STEEL OR ALUMINUM PIPE ARCHES WITH 2⅔" X ½" CORRUGATION.
4. INSTALLATION TYPE 1 OR 2 MAY BE USED FOR CORRUGATED STEEL OR ALUMINUM PIPE ARCHES WITH 3" X 1" OR 5" X 1" CORRUGATION.

GENERAL NOTES

1. METAL PIPE CULVERT CONSTRUCTION SHALL CONFORM TO ARKANSAS STATE HIGHWAY AND TRANSPORTATION DEPARTMENT STANDARD SPECIFICATIONS FOR HIGHWAY CONSTRUCTION (CURRENT EDITION), WITH APPLICABLE SUPPLEMENTAL SPECIFICATIONS AND SPECIAL PROVISIONS. UNLESS OTHERWISE NOTED IN THE PLANS, SECTION AND SUBSECTION REFER TO THE STANDARD CONSTRUCTION SPECIFICATIONS.
2. METAL PIPE CULVERT DESIGN SHALL CONFORM TO AASHTO LRFD BRIDGE DESIGN SPECIFICATIONS, FIFTH EDITION (2010) WITH 2010 INTERIMS.
3. METAL PIPE CULVERT MATERIALS AND INSTALLATIONS SHALL CONFORM TO SECTION 606 AND JOB SPECIAL PROVISION "METAL PIPE".
4. ALL PIPE SHALL BE PROTECTED DURING CONSTRUCTION BY A COVER SUFFICIENT TO PREVENT DAMAGE FROM PASSAGE OF EQUIPMENT.
5. THE MINIMUM TRENCH WIDTH SHALL BE THE OUTSIDE DIAMETER OF THE PIPE PLUS 24 INCHES. THE MAXIMUM ALLOWABLE TRENCH WIDTH SHALL BE THE MINIMUM WIDTH PRACTICABLE FOR WORKING CONDITIONS.
6. MULTIPLE PIPE CULVERTS SHALL BE INSTALLED WITH A MINIMUM CLEARANCE OF 24 INCHES BETWEEN STRINGS OF PIPE. REFER TO STD. DWG. FES-2 FOR MINIMUM CLEARANCE WHERE FLARED END SECTIONS ARE USED.
7. IMPERVIOUS MATERIAL SHOULD BE PLACED AS DIRECTED BY THE ENGINEER AT THE ENDS OF THE CULVERT TO PREVENT LOSS OF STRUCTURAL BEDDING WHEN PERVIOUS MATERIAL IS USED FOR STRUCTURAL BEDDING AND/OR BACKFILL.
8. WHEN DIRECTED BY THE ENGINEER, UNSUITABLE MATERIAL THAT IS ENCOUNTERED AT THE BOTTOM OF THE EXCAVATED TRENCH (BELOW THE AREA IDENTIFIED AS "STRUCTURAL BEDDING" ABOVE) WILL BE EXCAVATED AND REPLACED WITH SELECTED PIPE BEDDING. THE QUANTITY OF MATERIAL REQUIRED TO BACKFILL THE UNDERCUT AREA UP TO THE SELECTED PIPE BEDDING PAY LIMIT DESIGNATED ABOVE WILL BE MEASURED AND PAID FOR AS "SELECTED PIPE BEDDING."
9. WHEN THE EXISTING MATERIAL EXCAVATED FOR THE PIPE TRENCH IS DETERMINED BY THE ENGINEER TO BE UNSUITABLE FOR BACKFILLING THE PIPE (ABOVE THE AREA IDENTIFIED AS STRUCTURAL BACKFILL), BORROW MATERIAL OR MATERIAL FROM THE ROADWAY EXCAVATION WILL BE USED TO BACKFILL THE PIPE. IF SUITABLE MATERIAL IS NOT AVAILABLE, THE ENGINEER MAY AUTHORIZE THE USE OF "SELECTED PIPE BACKFILL."

CORRUGATED METAL PIPE ARCHES

EQUIV. DIA. (INCHES)	PIPE DIMENSION SPAN X RISE (INCHES)	MINUMUM CORNER RADIUS (INCHES)	STEEL				ALUMINUM			
			MIN. THICKNESS REQUIRED INCHES	① MIN. HEIGHT OF FILL, "H" (FT.)	MAX. HEIGHT OF FILL, "H" (FT.)		MIN. THICKNESS REQUIRED INCHES	① MIN. HEIGHT OF FILL, "H" (FT.)	MAX. HEIGHT OF FILL, "H" (FT.)	
				INSTALLATION	INSTALLATION			INSTALLATION	INSTALLATION	
				TYPE 1	TYPE 1			TYPE 1	TYPE 1	
			2 ⅔ INCH BY ½ INCH CORRUGATION RIVETED, WELDED, OR HELICAL LOCK-SEAM				2 ⅔ INCH BY ½ INCH CORRUGATION RIVETED OR HELICAL LOCK-SEAM			
15	17x13	3	0.064	2	15		0.060	2	15	
18	21x15	3	0.064	2	15		0.060	2	15	
21	24x18	3	0.064	2.25	15		0.060	2.25	15	
24	28x20	3	0.064	2.5	15		0.075	2.5	15	
30	35x24	3	0.079	3	12		0.075	3	12	
36	42x29	3½	0.079	3	12		0.105	3	12	
42	49x33	4	0.079	3	12		0.105	3	12	
48	57x38	5	0.109	3	13		0.135	3	13	
54	64x43	6	0.109	3	14		0.135	3	14	
60	71x47	7	0.138	3	15		0.164	3	15	
66	77x52	8	0.168	3	15					
72	83x57	9	0.168	3	15					
			② 3 INCH BY 1 INCH OR 5 INCH BY 1 INCH CORRUGATION RIVETED, WELDED, OR HELICAL LOCK-SEAM							
				INSTALLATION		INSTALLATION				
				TYPE 2	TYPE 1	TYPE 2	TYPE 1			
36	40x31	5	0.079	3	2	12	15			
42	46x36	6	0.079	3	2	13	15			
48	53x41	7	0.079	3	2	13	15			
54	60x46	8	0.079	3	2	13	15			
60	66x51	9	0.079	3	2	13	15			
66	73x55	12	0.079	3	2	15	15			
72	81x59	14	0.079	3	2	15	15			
78	87x63	14	0.079	3	2	15	15			
84	95x67	16	0.109	3	2	15	15			
90	103x71	16	0.109	3	2	15	15			
96	112x75	18	0.109	3	2	15	15			
102	117x79	18	0.109	3	2	15	15			
108	128x83	18	0.138	3	2	15	15			

① FOR MINIMUM COVER VALUES, "H" SHALL INCLUDE A MINIMUM 12" OF PAVEMENT AND/OR BASE.

② WHERE THE STANDARD 2 2/3"x ½" CORRUGATION AND GAUGE IS SPECIFIED FOR A GIVEN DIAMETER, A PIPE OF THE SAME DIAMETER WITH A 3" x 1" OR 5" x 1" CORRUGATION MAY BE SUBSTITUTED, PROVIDING IT IS GAUGED FOR A FILL HEIGHT CONDITION EQUAL TO OR GREATER THAN THE MAXIMUM FILL HEIGHT CONDITION FOR THE SPECIFIED GAUGE AND CORRUGATION.

DATE	REVISION	DATE FILMED
2-27-14	REVISED GENERAL NOTE 1.	
12-15-11	REVISED FOR LRFD DESIGN SPECS	
3-30-00	REVISED INSTALLATIONS	
11-06-97	ISSUED	

ARKANSAS STATE HIGHWAY COMMISSION

METAL PIPE CULVERT FILL HEIGHTS & BEDDING

STANDARD DRAWING PCM-1

INSTALLATION TYPE	•• MATERIAL REQUIREMENTS FOR STRUCTURAL BACKFILL AND STRUCTURAL BEDDING
TYPE 2	•SELECTED MATERIALS (CLASS SM-1, SM-2 OR SM-4)

• AGGREGATE BASE COURSE (CLASS 4, 5, 6, OR 7) MAY BE USED IN LIEU OF SELECTED MATERIAL.

SM3 WILL NOT BE ALLOWED.

•• STRUCTURAL BEDDING MATERIAL SHALL HAVE A MAXIMUM PARTICLE SIZE OF 1 INCH. STRUCTURAL BACKFILL MATERIAL SHALL BE FREE OF ORGANIC MATERIAL, STONES LARGER THAN 1.50 INCH IN GREATEST DIMENSION, OR FROZEN LUMPS.

STRUCTURAL BACKFILL AND STRUCTURAL BEDDING MATERIAL WILL NOT BE PAID FOR SEPARATELY, BUT COMPENSATION WILL BE CONSIDERED TO BE INCLUDED IN THE PRICE BID PER LINEAR FOOT OF HDPE PIPE.

MULTIPLE INSTALLATION OF HIGH DENSITY POLYETHYLENE PIPES

PIPE DIAMETER	CLEAR DISTANCE BETWEEN PIPES
18"	1'-6"
24"	2'-0"
30"	2'-6"
36"	3'-0"
42"	3'-6"
48"	4'-0"

MINIMUM TRENCH WIDTH BASED ON FILL HEIGHT "H"

PIPE DIAMETER	TRENCH WIDTH (FEET)	
	"H" < 10'-0"	"H" >OR= 10'-0"
18"	4'-6"	4'-6"
24"	5'-0"	6'-0"
30"	5'-6"	7'-6"
36"	6'-0"	9'-0"
42"	7'-0"	10'-6"
48"	8'-0"	12'-0"

①NOTE:
18" MIN. (18" - 30" DIAMETERS)
24" MIN. (36" - 48" DIAMETERS)
MINIMUM COVER VALUES, "H" SHALL INCLUDE A MINIMUM 12" OF PAVEMENT AND/OR BASE.

MINIMUM COVER FOR CONSTRUCTION LOADS

PIPE DIAMETER	② MIN. COVER (FEET) FOR INDICATED CONSTRUCTION LOADS			
	18.0-50.0 (KIPS)	50.0-75.0 (KIPS)	75.0-110.0 (KIPS)	110.0-175.0 (KIPS)
36" OR LESS	2'-0"	2'-6"	3'-0"	3'-0"
42" OR GREATER	3'-0"	3'-0"	3'-6"	4'-0"

②MINIMUM COVER SHALL BE MEASURED FROM TOP OF PIPE TO TOP OF THE MAINTAINED CONSTRUCTION ROADWAY SURFACE. THE SURFACE SHALL BE MAINTAINED.

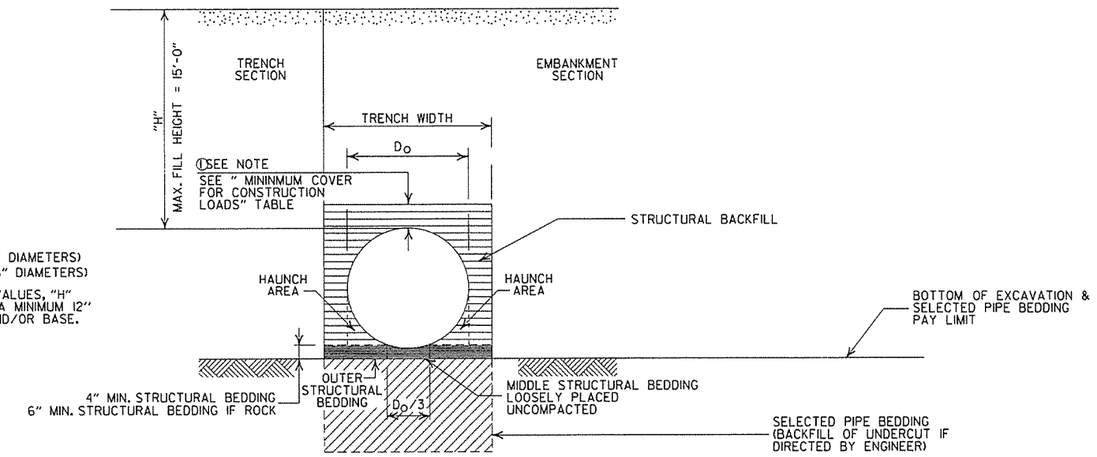

TYPE 2 EMBANKMENT AND TRENCH INSTALLATIONS

1. STRUCTURAL BACKFILL, EMBANKMENT, AND OUTER STRUCTURAL BEDDING MATERIAL SHALL BE COMPACTED TO 95% OF THE MAXIMUM DENSITY ACCORDING TO THE TYPE OR CLASS OF MATERIAL USED.

CONSTRUCTION SEQUENCE

1. PLACE STRUCTURAL BEDDING MATERIAL TO GRADE. DO NOT COMPACT.
2. INSTALL PIPE TO GRADE.
3. COMPACT STRUCTURAL BEDDING OUTSIDE THE MIDDLE THIRD OF THE PIPE.
4. THE STRUCTURAL BACKFILL SHALL BE PLACED AND COMPACTED IN LAYERS NOT EXCEEDING 8". THE LAYERS SHALL BE BROUGHT UP EVENLY AND SIMULTANEOUSLY TO THE ELEVATION OF THE MINIMUM COVER.
5. PIPE INSTALLATION MAY REQUIRE THE USE OF RESTRAINTS, WEIGHTING OR OTHER APPROVED METHODS IN ORDER TO HELP MAINTAIN GRADE AND ALIGNMENT.

GENERAL NOTES

1. PIPE SHALL CONFORM TO AASHTO M294, TYPE S. INSTALLATION SHALL CONFROM TO JOB SPECIAL PROVISION "PLASTIC PIPE" AND SECTION 606 OF THE STANDARD SPECIFICIATIONS FOR HIGHWAY CONSTRUCTION (CURRENT EDITION).
2. PLASTIC PIPE CULVERT DESIGN SHALL CONFORM TO AASHTO LRFD BRIDGE DESIGN SPECIFICATIONS, FIFTH EDITION (2010) WITH 2010 INTERIMS.
3. THE MAXIMUM ALLOWABLE TRENCH WIDTH SHALL BE THE MINIMUM WIDTH PLUS A SUFFICIENT WIDTH TO ENSURE WORKING ROOM TO PROPERLY AND SAFELY PLACE AND COMPACT HAUNCHING AND OTHER BACKFILL MATERIAL.
4. IMPERVIOUS MATERIAL SHOULD BE PLACED AS DIRECTED BY THE ENGINEER AT THE ENDS OF THE CULVERT TO PREVENT LOSS OF STRUCTURAL BEDDING WHEN PERVIOUS MATERIAL IS USED FOR STRUCTURAL BEDDING AND/OR BACKFILL.
5. WHEN DIRECTED BY THE ENGINEER, UNSUITABLE MATERIAL THAT IS ENCOUNTERED AT THE BOTTOM OF THE EXCAVATED TRENCH (BELOW THE AREA IDENTIFIED AS "STRUCTURAL BEDDING" ABOVE) WILL BE EXCAVATED AND REPLACED WITH SELECTED PIPE BEDDING. THE QUANTITY OF MATERIAL REQUIRED TO BACKFILL THE UNDERCUT AREA UP TO THE SELECTED PIPE BEDDING PAY LIMIT DESIGNATED ABOVE WILL BE MEASURED AND PAID FOR AS "SELECTED PIPE BEDDING."
6. WHEN THE EXISTING MATERIAL EXCAVATED FOR THE PIPE TRENCH IS DETERMINED BY THE ENGINEER TO BE UNSUITABLE FOR BACKFILLING THE PIPE (ABOVE THE AREA IDENTIFIED ABOVE AS STRUCTURAL BACKFILL), BORROW MATERIAL OR MATERIAL FROM THE ROADWAY EXCAVATION WILL BE USED TO BACKFILL THE PIPE. IF SUITABLE MATERIAL IS NOT AVAILABLE, THE ENGINEER MAY AUTHORIZE THE USE OF "SELECTED PIPE BACKFILL."
7. FOR PIPE TYPES THAT ARE NOT SMOOTH ON THE OUTSIDE (CORRUGATED OR PROFILE WALLS), BACKFILL GRADATIONS SHOULD BE SELECTED THAT WILL PERMIT THE FILLING OF THE CORRUGATION OR PROFILE VALLEY.
8. HIGH DENSITY POLYETHYLENE PIPES OF DIAMETERS OTHER THAN SHOWN WILL NOT BE ALLOWED.
9. JOINTS FOR HDPE PIPE SHALL MEET THE REQUIREMENTS FOR SOIL TIGHTNESS AS SPECIFIED IN AASHTO SECTION 26.4.2.4 AND 30.4.2 "AASHTO LRFD BRIDGE CONSTRUCTION SPECIFICATIONS." JOINTS SHALL BE INSTALLED PER MANUFACTURER'S RECOMMENDATIONS.

- LEGEND -

H = FILL HEIGHT (FT.)
Ø = OUTSIDE DIAMETER OF PIPE
MAX. = MAXIMUM
MIN. = MINIMUM

= STRUCTURAL BACKFILL MATERIAL

= UNDISTURBED SOIL

DATE	REVISION	DATE FILMED
2-27-14	REVISED GENERAL NOTE 1.	
12-15-11	REVISED GENERAL NOTES & MINIMUM COVER NOTE	
11-17-10	ISSUED	

ARKANSAS STATE HIGHWAY COMMISSION

PLASTIC PIPE CULVERT (HIGH DENSITY POLYETHYLENE)

STANDARD DRAWING PCP-1

INSTALLATION TYPE	•• MATERIAL REQUIREMENTS FOR STRUCTURAL BACKFILL AND STRUCTURAL BEDDING
TYPE 2	•SELECTED MATERIALS (CLASS SM-1, SM-2, OR SM-4)

• AGGREGATE BASE COURSE (CLASS 4, 5, 6, OR 7) MAY BE USED IN LIEU OF SELECTED MATERIAL.

SM3 WILL NOT BE ALLOWED.

•• STRUCTURAL BEDDING MATERIAL SHALL HAVE A MAXIMUM PARTICLE SIZE OF 1 INCH. STRUCTURAL BACKFILL MATERIAL SHALL BE FREE OF ORGANIC MATERIAL, STONES LARGER THAN 1.50 INCH IN GREATEST DIMENSION, OR FROZEN LUMPS.

STRUCTURAL BACKFILL AND STRUCTURAL BEDDING MATERIAL WILL NOT BE PAID FOR SEPARATELY, BUT COMPENSATION WILL BE CONSIDERED TO BE INCLUDED IN THE PRICE BID PER LINEAR FOOT OF PVC PIPE.

MINIMUM TRENCH WIDTH BASED ON FILL HEIGHT "H"

PIPE DIAMETER	TRENCH WIDTH (FEET)	
	"H" < 10'-0"	"H" >OR= 10'-0"
18"	4'-6"	4'-6"
24"	5'-0"	6'-0"
30"	5'-6"	7'-6"
36"	6'-0"	9'-0"

MULTIPLE INSTALLATION OF PVC PIPES

PIPE DIAMETER	CLEAR DISTANCE BETWEEN PIPES
18"	1'-6"
24"	2'-0"
30"	2'-6"
36"	3'-0"

MAXIMUM FILL HEIGHT BASED ON STRUCTURAL BACKFILL

PIPE DIAMETER	"H"
18"	45'-0"
24"	45'-0"
30"	40'-0"
36"	40'-0"

① NOTE:
12" MIN. (18" - 36" DIAMETERS)
MINIMUM COVER VALUE, "H" SHALL INCLUDE A MINIMUM 12" OF PAVEMENT AND/OR BASE.

MINIMUM COVER FOR CONSTRUCTION LOADS

PIPE DIAMETER	② MIN. COVER (FEET) FOR INDICATED CONSTRUCTION LOADS			
	18.0-50.0 (KIPS)	50.0-75.0 (KIPS)	75.0-110.0 (KIPS)	110.0-175.0 (KIPS)
18" THRU 36"	2'-0"	2'-6"	3'-0"	3'-0"

②MINIMUM COVER SHALL BE MEASURED FROM TOP OF PIPE TO TOP OF THE MAINTAINED CONSTRUCTION ROADWAY SURFACE. THE SURFACE SHALL BE MAINTAINED.

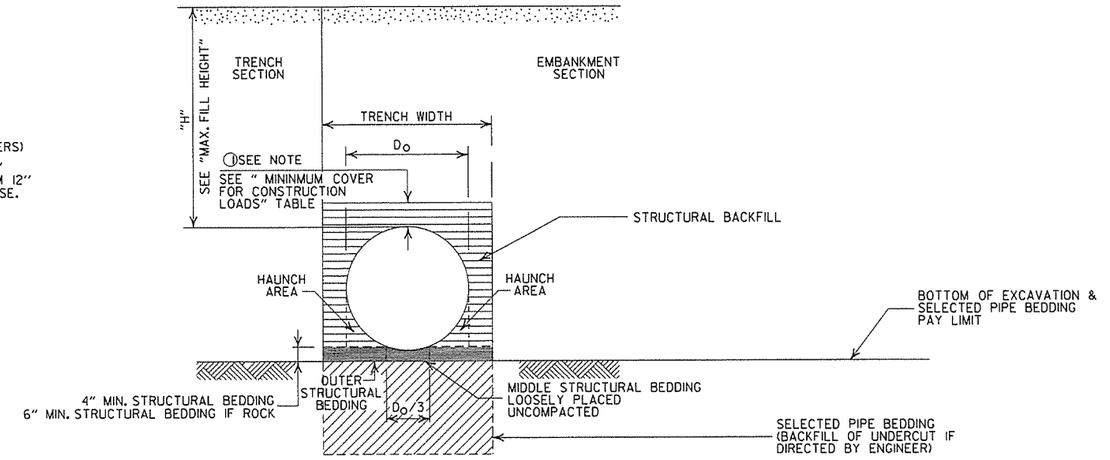

TYPE 2 EMBANKMENT AND TRENCH INSTALLATIONS

1. STRUCTURAL BACKFILL, EMBANKMENT, AND OUTER STRUCTURAL BEDDING MATERIAL SHALL BE COMPACTED TO 95% OF THE MAXIMUM DENSITY ACCORDING TO THE TYPE OR CLASS OF MATERIAL USED.

CONSTRUCTION SEQUENCE

1. PLACE STRUCTURAL BEDDING MATERIAL TO GRADE. DO NOT COMPACT.
2. INSTALL PIPE TO GRADE.
3. COMPACT STRUCTURAL BEDDING OUTSIDE THE MIDDLE THIRD OF THE PIPE.
4. THE STRUCTURAL BACKFILL SHALL BE PLACED AND COMPACTED IN LAYERS NOT EXCEEDING 8". THE LAYERS SHALL BE BROUGHT UP EVENLY AND SIMULTANEOUSLY TO THE ELEVATION OF THE MINIMUM COVER.
5. PIPE INSTALLATION MAY REQUIRE THE USE OF RESTRAINTS, WEIGHTING OR OTHER APPROVED METHODS IN ORDER TO HELP MAINTAIN GRADE AND ALIGNMENT.

GENERAL NOTES

1. PIPE SHALL CONFORM TO ASTM F949, CELL CLASS 12454. INSTALLATION SHALL CONFROM TO JOB SPECIAL PROVISION "PLASTIC PIPE" AND SECTION 606 OF THE STANDARD SPECIFICIATIONS FOR HIGHWAY CONSTRUCTION (CURRENT EDITION).
2. PLASTIC PIPE CULVERT DESIGN SHALL CONFORM TO AASHTO LRFD BRIDGE DESIGN SPECIFICATIONS, FIFTH EDITION (2010) WITH 2010 INTERIMS.
3. THE MAXIMUM ALLOWABLE TRENCH WIDTH SHALL BE THE MINIMUM WIDTH PLUS A SUFFICIENT WIDTH TO ENSURE WORKING ROOM TO PROPERLY AND SAFELY PLACE AND COMPACT HAUNCHING AND OTHER BACKFILL MATERIAL.
4. IMPERVIOUS MATERIAL SHOULD BE PLACED AS DIRECTED BY THE ENGINEER AT THE ENDS OF THE CULVERT TO PREVENT LOSS OF STRUCTURAL BEDDING WHEN PERVIOUS MATERIAL IS USED FOR STRUCTURAL BEDDING AND/OR BACKFILL.
5. WHEN DIRECTED BY THE ENGINEER, UNSUITABLE MATERIAL THAT IS ENCOUNTERED AT THE BOTTOM OF THE EXCAVATED TRENCH (BELOW THE AREA IDENTIFIED AS "STRUCTURAL BEDDING" ABOVE) WILL BE EXCAVATED AND REPLACED WITH SELECTED PIPE BEDDING. THE QUANTITY OF MATERIAL REQUIRED TO BACKFILL THE UNDERCUT AREA UP TO THE SELECTED PIPE BEDDING PAY LIMIT DESIGNATED ABOVE WILL BE MEASURED AND PAID FOR AS "SELECTED PIPE BEDDING."
6. WHEN THE EXISTING MATERIAL EXCAVATED FOR THE PIPE TRENCH IS DETERMINED BY THE ENGINEER TO BE UNSUITABLE FOR BACKFILLING THE PIPE (ABOVE THE AREA IDENTIFIED ABOVE AS STRUCTURAL BACKFILL), BORROW MATERIAL OR MATERIAL FROM THE ROADWAY EXCAVATION WILL BE USED TO BACKFILL THE PIPE. IF SUITABLE MATERIAL IS NOT AVAILABLE, THE ENGINEER MAY AUTHORIZE THE USE OF "SELECTED PIPE BACKFILL."
7. FOR PIPE TYPES THAT ARE NOT SMOOTH ON THE OUTSIDE (CORRUGATED OR PROFILE WALLS), BACKFILL GRADATIONS SHOULD BE SELECTED THAT WILL PERMIT THE FILLING OF THE CORRUGATION OR PROFILE VALLEY.
8. PVC PIPES OF DIAMETERS OTHER THAN SHOWN WILL NOT BE ALLOWED.
9. JOINTS FOR PVC PIPE SHALL MEET THE REQUIREMENTS FOR SOIL TIGHTNESS AS SPECIFIED IN AASHTO SECTION 26.4.2.4 AND 30.4.2 "AASHTO LRFD BRIDGE CONSTRUCTION SPECIFICATIONS." JOINTS SHALL BE INSTALLED PER MANUFACTURER'S RECOMMENDATIONS.

- LEGEND -

H = FILL HEIGHT (FT.)
D_O = OUTSIDE DIAMETER OF PIPE
MAX. = MAXIMUM
MIN. = MINIMUM

= STRUCTURAL BACKFILL MATERIAL

= UNDISTURBED SOIL

DATE	REVISION	DATE FILMED
2-27-14	REVISED GENERAL NOTE 1.	
12-15-11	REV GENERAL NOTES & MINIMUM COVER NOTE; DELETED SM3 MATERIAL	
11-17-10	ISSUED	

ARKANSAS STATE HIGHWAY COMMISSION

PLASTIC PIPE CULVERT (PVC F949)

STANDARD DRAWING PCP-2

NOTES:

1. ALL LINES SHALL HAVE A WIDTH OF 4 INCHES.
2. THE THICKNESS AND RATE OF PAINT APPLICATION SHALL BE AS SPECIFIED IN SECTION 718 OF THE STANDARD SPECIFICATIONS.
3. THIS DRAWING SHALL BE USED IN CONJUNCTION WITH THE LATEST REVISED ADDITION OF THE "MANUAL ON UNIFORM TRAFFIC CONTROL DEVICES."
4. RAISED PAVEMENT MARKERS SHALL BE CENTERED BETWEEN SKIP LINES ON 40 FEET SPACING UNLESS OTHERWISE SHOWN ON THE PLANS.

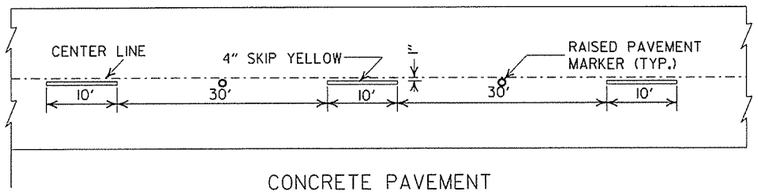

CONCRETE PAVEMENT

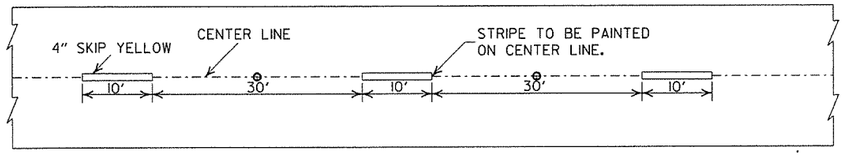

ASPHALT PAVEMENT

BROKEN LINE STRIPING

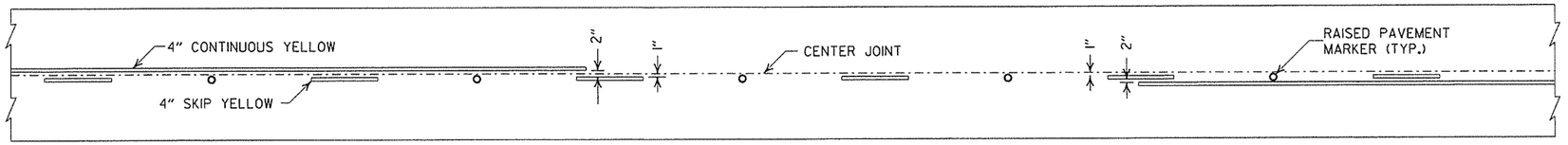

SOLID LINE STRIPING ON CONCRETE PAVEMENT

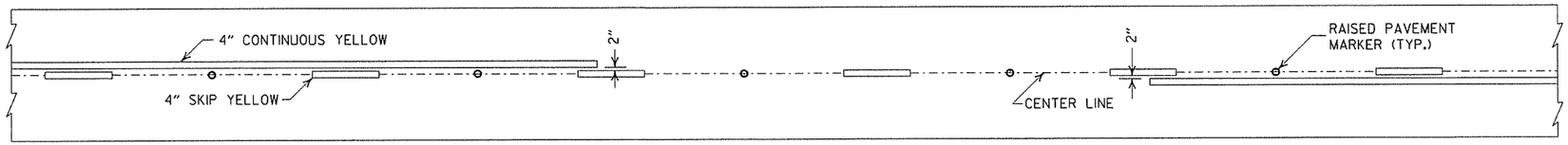

SOLID LINE STRIPING ON ASPHALT PAVEMENT

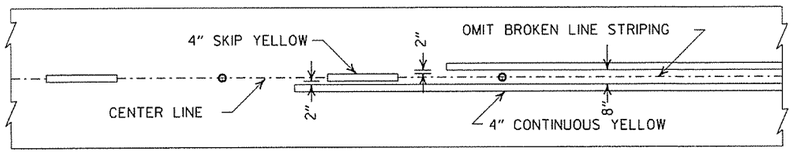

ASPHALT PAVEMENT

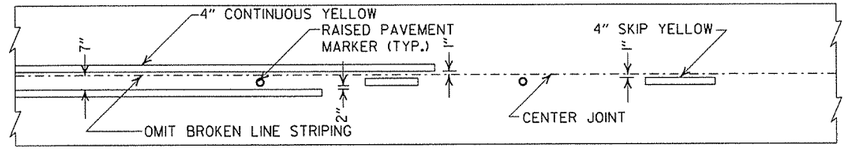

CONCRETE PAVEMENT

STRIPING AT ADJACENT NO PASSING LANES

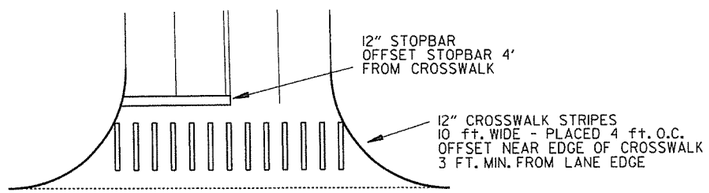

CROSSWALK AND STOPBAR DETAILS

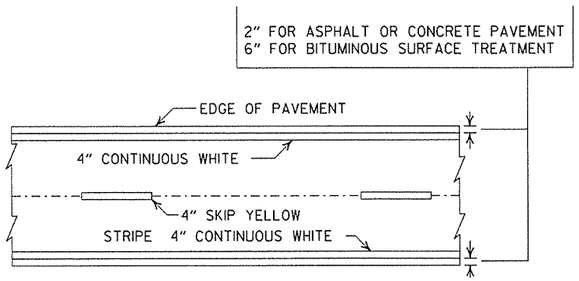

PAVEMENT EDGE LINE MARKING

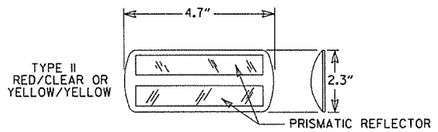

NOTE:
THE RED LENS OF THE TYPE II R.P.M. SHALL FACE THE INCORRECT TRAFFIC MOVEMENT.

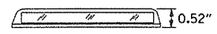

DETAIL OF STANDARD RAISED PAVEMENT MARKERS

GENERAL NOTES:

THIS DRAWING SHOULD BE CONSIDERED AS TYPICAL ONLY AND THE FINAL LOCATION OF THE STRIPING AND RAISED PAVEMENT MARKERS SHALL BE DETERMINED BY THE ENGINEER.

THIS DRAWING SHOULD BE USED IN CONJUNCTION WITH THE "MANUAL ON UNIFORM TRAFFIC CONTROL DEVICES", LATEST REVISION.

NOTE:

DIMENSIONS SHOWN FOR RAISED PAVEMENT MARKERS ARE TYPICAL. THE CONTRACTOR MAY SUBSTITUTE SIMILAR MARKERS WITH THE APPROVAL OF THE ENGINEER. REQUESTING APPROVAL FOR SIMILAR MARKERS MAY BE MADE BY REFERRING TO THE AHTD QUALIFIED PRODUCTS LIST.

DATE	REVISION	FILMED
9-12-13	REVISED DETAIL OF STANDARD RAISED PAVEMENT MARKERS	
11-17-10	REVISED GENERAL NOTES & REMOVED PLOWABLE PVMT MRKRS	
11-18-04	REVISED NOTE 2 & GENERAL NOTES	
8-22-02	ADDED CROSSWALK & STOPBAR DTLS.	
7-02-98	ADDED DETAILS OF STD. RAISED PAV'T. MARKERS	
4-26-96	REV. NOTES 3&4; ADDED R.P.M.	
9-30-80	DRAWN	1-9-30-80

ARKANSAS STATE HIGHWAY COMMISSION

PAVEMENT MARKING DETAILS

STANDARD DRAWING PM-1

PAVEMENT MARKING QUANTITIES
(BASED ON 700' ACCEL. LANE + 300' TAPER)

ENTRANCE RAMP

8" WHITE = 228 LIN. FT.
RAISED PAVEMENT MARKERS TYPE II (WHITE/RED) = 38 EACH

EXIT RAMP

4" WHITE = 280 LIN. FT.
8" WHITE = 655 LIN. FT.
RAISED PAVEMENT MARKERS TYPE II (WHITE/RED) = 38 EACH
RAISED PAVEMENT MARKERS TYPE II (WHITE/RED) = 48 EACH
RAISED PAVEMENT MARKERS TYPE II (WHITE/RED) = 38 EACH

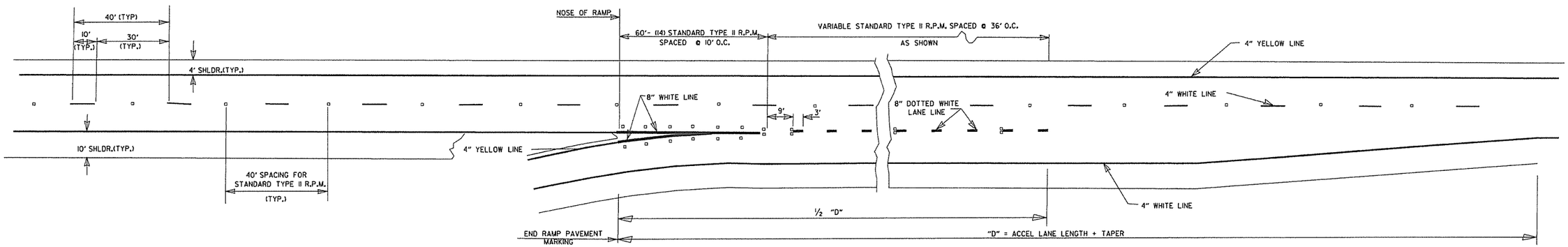

ENTRANCE RAMPS

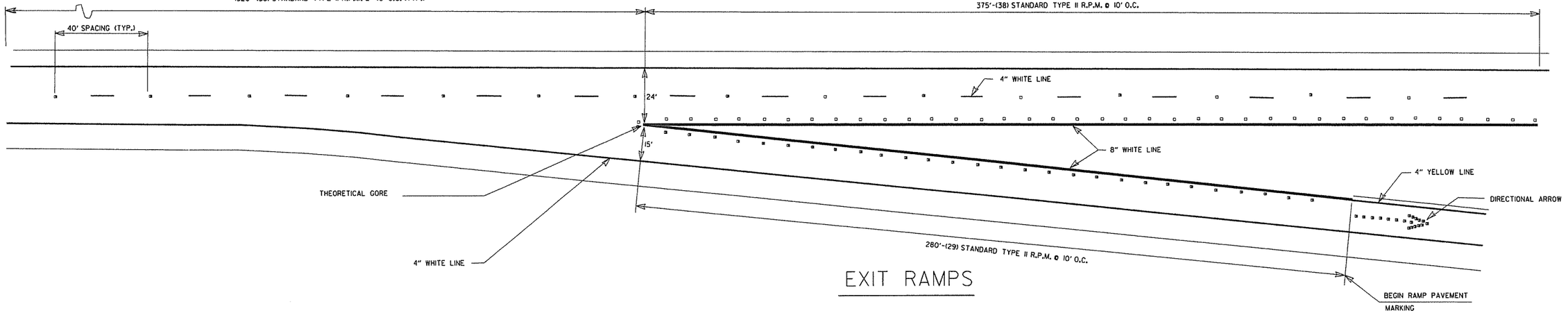

EXIT RAMPS

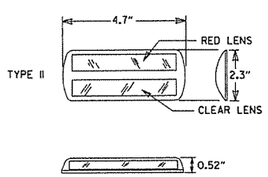

DETAIL OF
STANDARD
RAISED PAVEMENT MARKERS

NOTE:
THE RED LENS OF THE TYPE II R.P.M. SHALL FACE THE INCORRECT TRAFFIC MOVEMENT.

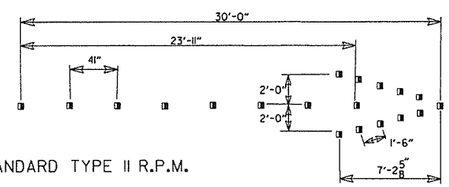

(19) STANDARD TYPE II R.P.M.

DIRECTIONAL ARROWS

GENERAL NOTES:

THIS DRAWING SHOULD BE CONSIDERED AS TYPICAL ONLY AND THE FINAL LOCATION OF THE STRIPING AND PAVEMENT MARKERS SHALL BE DETERMINED BY THE ENGINEER.

THIS DRAWING SHOULD BE USED IN CONJUNCTION WITH THE "MANUAL ON UNIFORM TRAFFIC CONTROL DEVICES", LATEST REVISION.

NOTE:
DIMENSIONS SHOWN FOR RAISED PAVEMENT MARKERS ARE TYPICAL. THE CONTRACTOR MAY SUBSTITUTE SIMILAR MARKERS WITH THE APPROVAL OF THE ENGINEER, REQUESTING APPROVAL FOR SIMILAR MARKERS MAY BE MADE BY REFERRING TO THE AHTD QUALIFIED PRODUCTS LIST.

DATE	REVISION	FILMED
9-12-13	REVISED DETAIL OF STANDARD RAISED PAVEMENT MARKERS	
7-26-12	REVISED RPM NOTATION	
12-15-11	REVISED RPMs ACCORDING TO LATEST POLICY	
11-17-10	REMOVED PLOWABLE PAVEMENT MARKERS	
6-3-10	REVISED PER 2009 MUTCD	
11-18-04	REVISED NOTES	
8-22-02	ADDED & REVISED NOTES; REV. ENTRANCE & EXIT RAMPS	
5-18-00	REMOVED HASHMARKS	
7-02-98	CHANGED TYPES TO ROMAN NUMERALS	
4-26-96	ADDED DIMENSIONS & QUANTITIES; REVISED LANE WIDTH ON EXIT RAMP	
2-2-95	PLACED IN USE	2-2-95

ARKANSAS STATE HIGHWAY COMMISSION

PERMANENT PAVEMENT MARKING ON ACCESS CONTROLLED ROADWAYS

STANDARD DRAWING PM-2

NOTE:
1. GRANULAR BACKFILL TO BE SUBSIDIARY TO PIPE UNDERDRAIN.

2. UNLESS OTHERWISE SPECIFIED ON THE PLANS, THE UNDERDRAIN COVER SHALL BE THOROUGHLY COMPACTED EARTH AND SHALL BE SUBSIDIARY TO PIPE UNDERDRAIN.

3. GRANULAR MATERIAL SHALL BE WRAPPED WITH GEOTEXTILE FABRIC. LAP FABRIC 12" OR THE WIDTH OF THE TRENCH AT THE TOP.

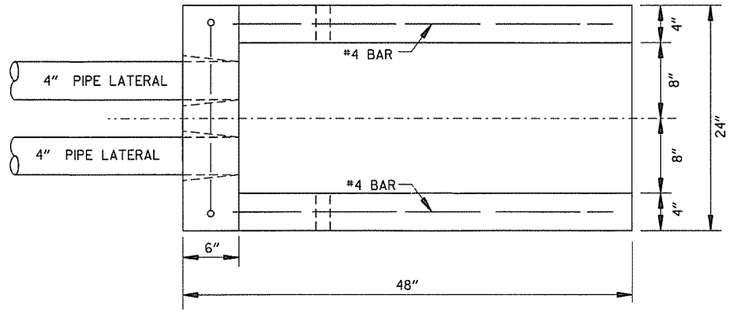

PLAN VIEW

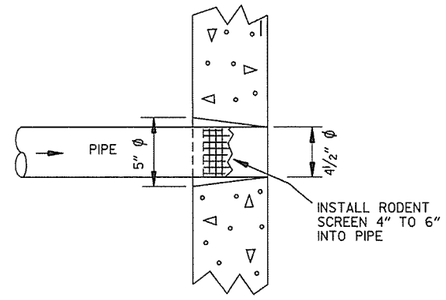

DETAIL OF HOLE FOR 4" PIPE

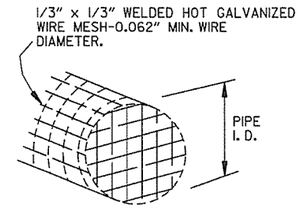

DETAIL OF RODENT SCREEN

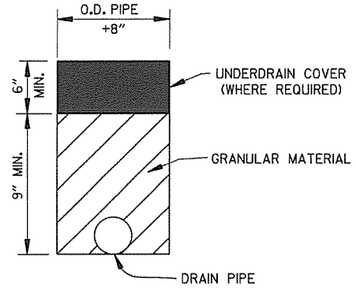

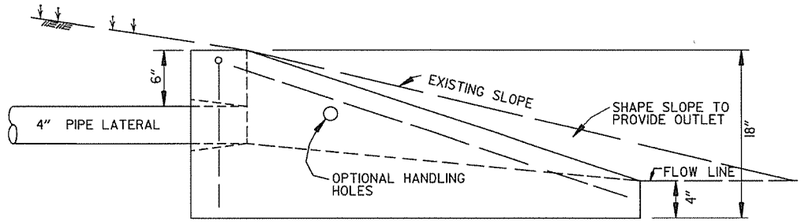

SIDE VIEW

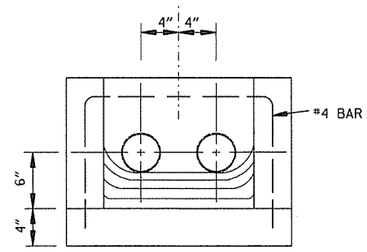

FRONT VIEW

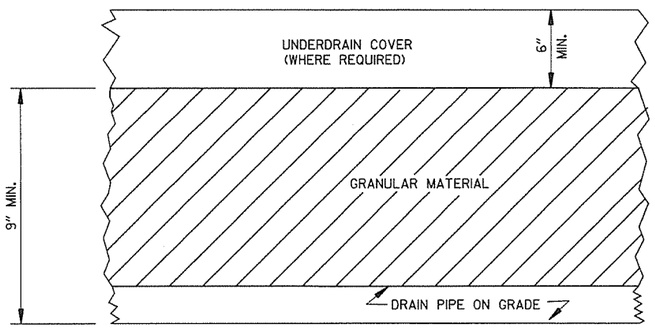

DETAILS OF PIPE UNDERDRAIN

UNDERDRAIN OUTLET PROTECTORS

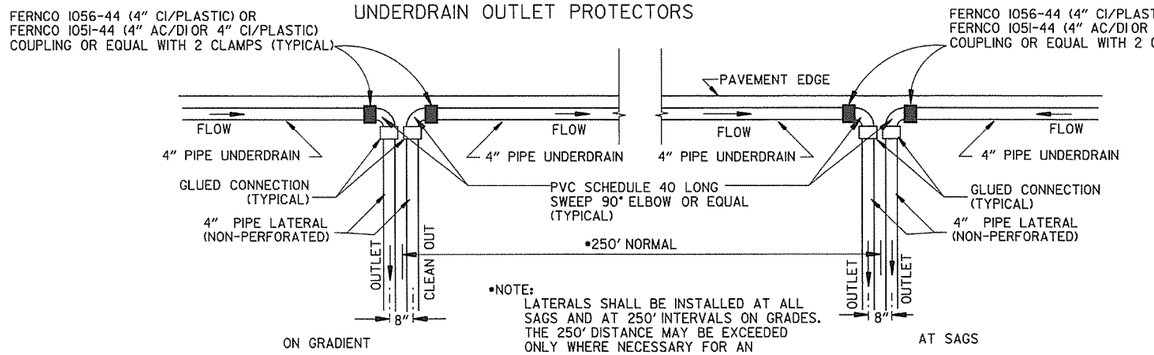

DETAIL OF PIPE UNDERDRAIN LATERALS WHEN PLACED ALONG PAVEMENT EDGE

NOTE: PVC PIPE FOR LATERALS SHALL MEET THE REQUIREMENTS OF ASTM D 1785 (LATEST REVISION) FOR SCHEDULE 40 PIPE.

DATE	REVISION	DATE FILMED
4-10-03	REVISED NOTE 3	
1-12-00	REVISED DETAIL OF UNDERDRAIN LATERALS	
11-18-98	REVISED NOTE	
10-18-96	REVISED MIN. DEPTH & GEOTEXTILE FABRIC	
4-26-96	ADDED LATERAL NOTE; 5½" TO 5"	
11-22-95	REVISED LATERALS	
7-20-95	REVISED LATERALS & ADDED NOTE	
11- 3-94	REVISED FOR DUAL LATERALS	11- 3-94
10- 1-92	SUBSTITUTED GEOTEXTILE	10- 1-92
8-15-91	ADDED POLYEDTHYLENE PIPE	8-15-91
11- 8-90	DELETED ALTERNATE NOTE	11- 8-90
1-25-90	ADDED 4" SNAP ADAPTER	1-25-90
11-30-89	DEL. (SUBGRADE); ADDED (WHERE REQUIRED)	11-30-89
7-15-88	ISSUED P.L.M.	647-7-15-88

ARKANSAS STATE HIGHWAY COMMISSION

DETAILS OF PIPE UNDERDRAIN

STANDARD DRAWING PU-1

7-20-95 INSTD.PUI

STEEL FABRICATION: REINFORCING STEEL FABRICATION SHALL CONFORM TO THE DIMENSIONS LISTED IN THE TABLE BELOW:

BAR SIZE	PIN DIAMETER	HOOK EXTENSION "K"
3	2¼"	4"
4	3 "	4½"
5	3¾"	5"
6	4½"	6"
7	5¼"	7"
8	6"	8"

IF THE OVERALL HEIGHT OF THE HOOK (SEE DIAGRAM BELOW) FOR A "b", "b1", "b2" or "b3" BENT BAR IS GREATER THAN THE CORRESPONDING TOP OR BOTTOM SLAB THICKNESS, LESS 2¾ INCHES, EACH BENT BAR SHALL BE REPLACED WITH ONE HOOKED BAR AND ONE STRAIGHT BAR, USING LENGTHS AS SHOWN IN THE TABLE BELOW. THE TWO BARS SHALL BE THE SAME DIAMETER AS, AND PLACED AT THE SAME SPACING AS, THE "b", "b1", "b2" OR "b3" BENT BARS THEY REPLACE.

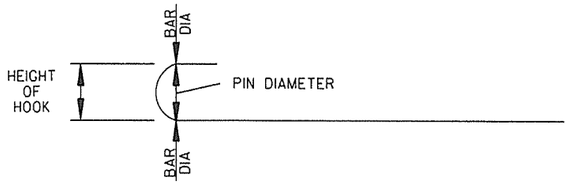

NOTE: DIMENSIONS OF BARS ARE MEASURED OUT TO OUT OF BARS.

OVERALL HEIGHT OF HOOKED BAR DIAGRAM

THE HOOKED BARS SHALL BE PLACED IN THE BOTTOM OF THE TOP SLAB AND THE TOP OF THE BOTTOM SLAB. THE STRAIGHT BARS SHALL BE PLACED IN THE TOP OF THE TOP SLAB AND THE BOTTOM OF THE BOTTOM SLAB. SEE TABLE BELOW FOR LENGTHS OF REPLACEMENT HOOKED AND STRAIGHT BARS.

FOR SKEWED CULVERTS, THE REPLACEMENT STRAIGHT BAR MAY HAVE TO BE CUT IN FIELD TO FIT.

REPLACEMENT BAR LENGTHS TABLE

BAR SIZE: "b", "b1", "b2" OR "b3"	LENGTH OF HOOKED BAR	LENGTH OF STRAIGHT BAR
#4	L + 1' - 0"	SEE "c" BAR LENGTH
#5	L + 1' - 2"	SEE "c" BAR LENGTH
#6	L + 1' - 4"	SEE "c" BAR LENGTH
#7	L + 1' - 8"	SEE "c" BAR LENGTH
#8	L + 1' - 10"	SEE "c" BAR LENGTH
#9	L + 2' - 6"	SEE "c" BAR LENGTH

L = "OW" - 3 INCHES

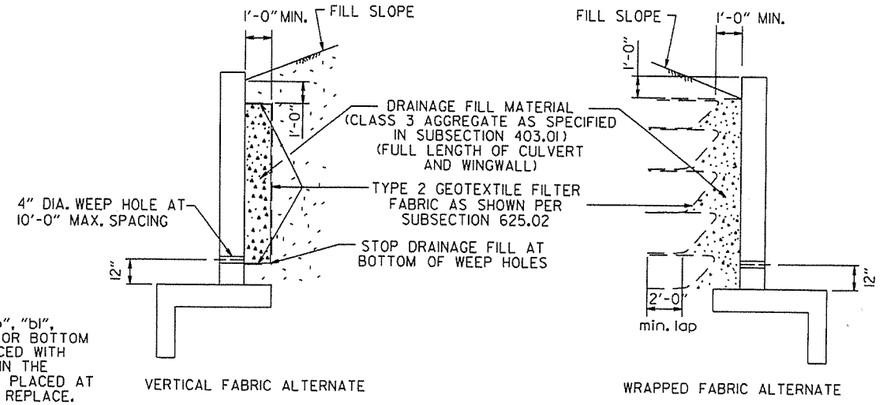

WINGWALL & CULVERT DRAINAGE DETAIL

REINFORCED CONCRETE BOX CULVERT GENERAL NOTES

CONCRETE SHALL BE CLASS S WITH A MINIMUM 28 DAY COMPRESSIVE STRENGTH OF 3500 PSI.

REINFORCING STEEL SHALL BE AASHTO M 31 OR M 53, GRADE 60.

CONSTRUCTION AND MATERIALS FOR WINGWALL & CULVERT DRAINAGE, INCLUDING WEEP HOLES AND GRANULAR MATERIAL, SHALL BE SUBSIDIARY TO THE BID ITEM, "CLASS S CONCRETE".

MEMBRANE WATERPROOFING SHALL CONFORM TO THE REQUIREMENTS OF SECTION 815 OF THE STANDARD SPECIFICATIONS.

MEMBRANE WATERPROOFING SHALL BE APPLIED TO ALL CONSTRUCTION JOINTS IN THE TOP SLAB AND THE SIDEWALLS OF R.C. BOX CULVERTS AS DIRECTED BY THE ENGINEER. NO PAYMENT SHALL BE MADE FOR THIS ITEM, BUT PAYMENT WILL BE CONSIDERED TO BE INCLUDED IN THE VARIOUS ITEMS BID FOR THE R.C. BOX CULVERT.

REINFORCING STEEL TOLERANCES: THE TOLERANCES FOR REINFORCING STEEL SHALL MEET THOSE LISTED IN "MANUAL OF STANDARD PRACTICE" PUBLISHED BY CONCRETE REINFORCING STEEL INSTITUTE (CRSI) EXCEPT THAT THE TOLERANCE FOR TRUSS BARS SUCH AS FIGURE 3 ON PAGE 7-4 OF THE CRSI MANUAL SHALL BE MINUS ZERO TO PLUS ½ INCH.

WEEP HOLES IN BOX CULVERT WALLS SHALL HAVE A MAXIMUM HORIZONTAL SPACING OF 10'-0" AND SHALL BE SPACED TO CLEAR ALL REINFORCING STEEL. THE DRAIN OPENING SHALL BE 4" DIAMETER AND SHALL BE PLACED 12" ABOVE THE TOP OF THE BOTTOM SLAB.

WEEP HOLES IN WINGWALLS SHALL HAVE A MAXIMUM HORIZONTAL SPACING OF 10'-0" AND SHALL BE SPACED TO CLEAR ALL REINFORCING STEEL. THERE SHALL BE A MINIMUM OF TWO (2) WEEP HOLES IN EACH WINGWALL. THE DRAIN OPENING SHALL BE 4" DIAMETER AND SHALL BE PLACED 12" ABOVE THE TOP OF THE WINGWALL FOOTING.

THE REQUIREMENTS SHOWN ON THIS DRAWING SHALL SUPERCEDE THE CORRESPONDING REQUIREMENTS ON ALL REINFORCED CONCRETE BOX CULVERT STANDARD DRAWINGS.

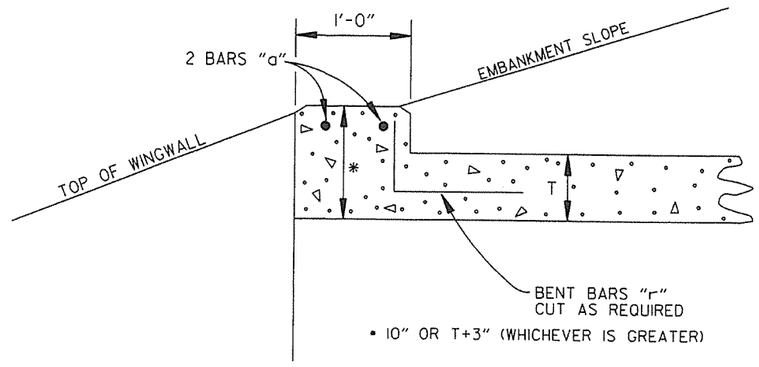

NOTE: FOR ALL SKEWED R.C. BOX CULVERTS THE LENGTH "K" OF THE MODIFIED HEADWALL SHALL BE EQUAL TO THE ROADWAY LENGTH "RL". THE ENDS OF THE HEADWALL SHALL BE CONSTRUCTED PARALLEL TO THE SKEW ANGLE OF THE BOX CULVERT.

R.C. BOX CULVERT HEADWALL MODIFICATIONS

DATE	REVISION	DATE FILMED
7/26/12	REV. DRAINAGE FILL MATERIAL & DETAIL	
12/15/11	REQUIRE WEEP HOLES IN BOX CULVERT WALLS	
5-25-06	REV. GEN. NOTES AND DETAILS FOR WEEP HOLES; BAR DIAGRAM	
11-16-01	ADDED WINGWALL DRAINAGE DETAIL/EDITED GEN. NOTES	
10-18-96	REV. ASTM REF. TO AASHTO & ADDED BAR DIAGRAM	
10-12-95	MOVED SOLID SODDING DETAIL TO RCB-2	
6-2-94	ADDED SOLID SODDING PLAN DETAIL	
8-5-93	REVISED PIN DIAMETER TO SPECS.	
8-15-91	DRAWN AND ISSUED	

ARKANSAS STATE HIGHWAY COMMISSION

REINFORCED CONCRETE BOX CULVERT DETAILS

STANDARD DRAWING RCB-1

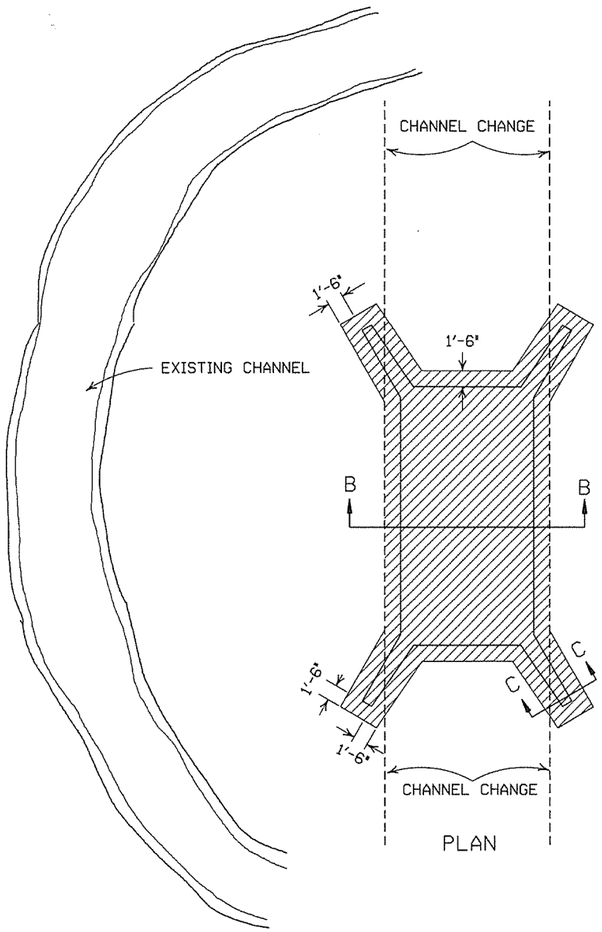

PLAN

SOLID SODDING

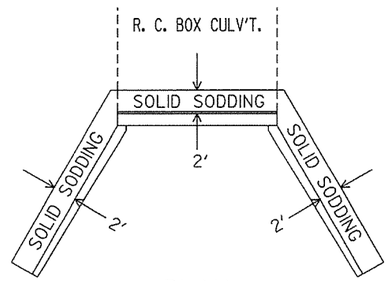

PLAN

PARTIAL SECTION SHOWING SOLID SODDING AT HEADWALLS AND WING WALLS

NOTE: LENGTH MEASURED ALONG THE CENTER OF 2' STRIP OF SOLID SODDING.

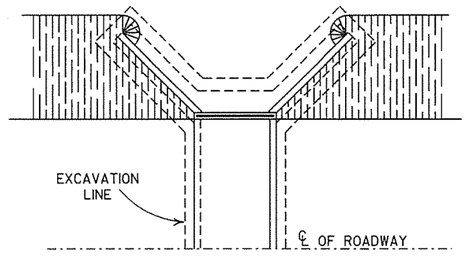

PLAN

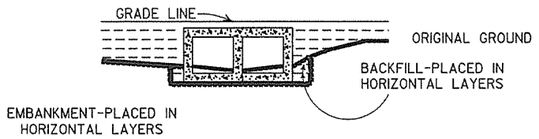

LONGITUDINAL SECTION

BACKFILL DETAILS FOR BOX CULVERT

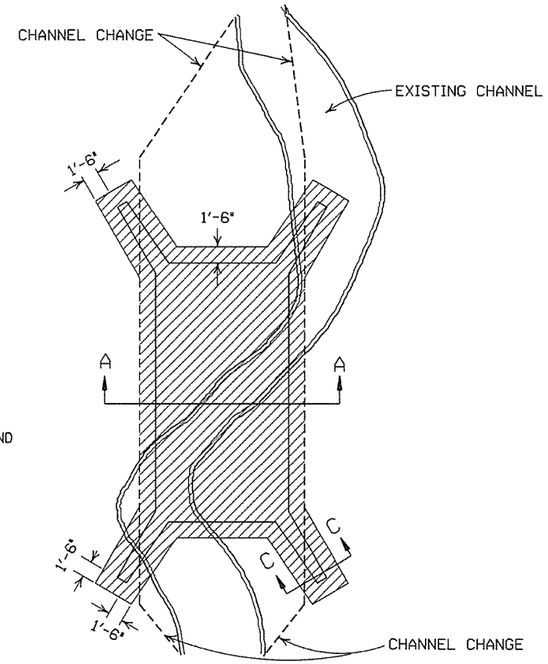

PLAN

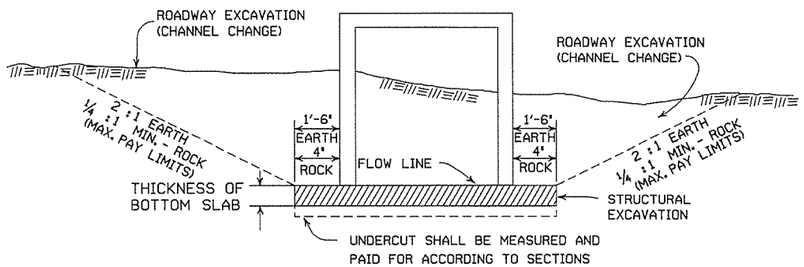

SECTION B-B

DETAILS FOR NEW CHANNELS

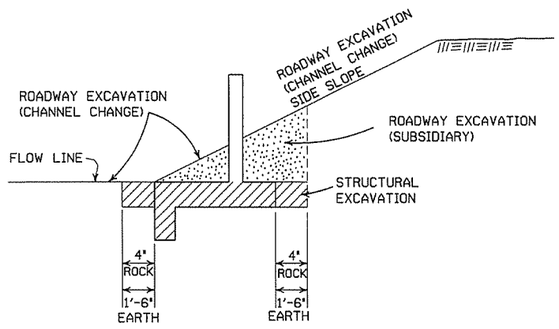

SECTION C-C

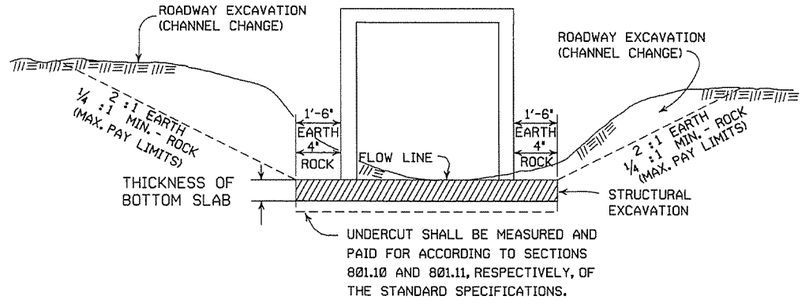

SECTION A-A

DETAILS THROUGH EXISTING CHANNELS

GENERAL NOTES:

ROADWAY EXCAVATION (CHANNEL CHANGE) WILL BE PAID FOR AT R.C. BOX CULVERT LOCATIONS. IT WILL BE PAID TO THE LIMITS ACTUALLY CUT AND WILL BE CONFINED TO THAT PORTION OF THE INDICATED AREA THAT IS ABOVE THE FLOW LINE. ROADWAY EXCAVATION (CHANNEL CHANGE) SHALL BE MEASURED BY CROSS SECTIONS AND VOLUMES COMPUTED BY AVERAGE END AREA METHOD. ALL CHANNEL CHANGES SHALL BE BROUGHT TO GRADE PRIOR TO MAKING ANY EXCAVATION FOR STRUCTURES.

EXCAVATION FOR STRUCTURES WILL BE PAID FOR AT ALL R.C. BOX CULVERT LOCATIONS. IT WILL BE PAID TO THE LIMITS SHOWN AND SHALL BE CONFINED TO THAT PORTION OF THE INDICATED AREA THAT IS BELOW THE CHANNEL FLOW LINE.

ROADWAY EXCAVATION SHOWN IN SECTION C-C ABOVE AS SUBSIDIARY WILL NOT BE MEASURED OR PAID FOR DIRECTLY, BUT PAYMENT WILL BE CONSIDERED TO BE INCLUDED IN THE VARIOUS ITEMS OF EXCAVATION.

DATE	REVISION	FILMED
11-20-03	REVISED SECTION A-A NOTE	
8-22-02	REVISED SECTION B-B NOTE	
10-12-95	COMBINED 1891B AND 1888A	
1-4-83	REVISED GENERAL NOTES	674-1-4-83
	AND ADDED MAXIMUM PAY	
	LIMIT NOTES.	
2-2-76	EXCAV. PAY LIMITS	917-2-2-76
10-2-72	REVISED AND REDRAWN	564-10-16-72

ARKANSAS STATE HIGHWAY COMMISSION

EXCAVATION PAY LIMITS, BACKFILL, & SOLID SODDING FOR BOX CULVERTS

STANDARD DRAWING RCB-2

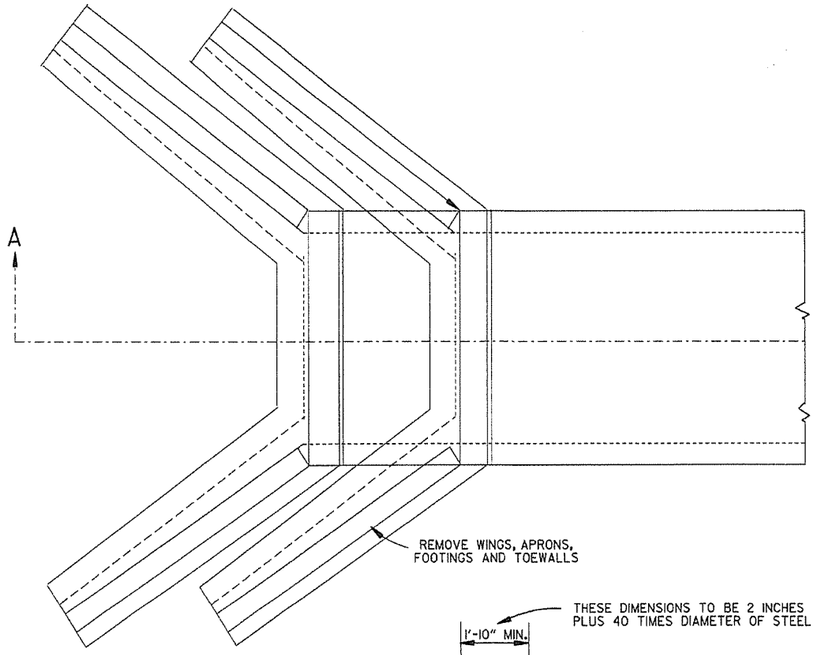

TOP VIEW
R.C. BOX CULVERT

SECTION A-A

METHOD 1

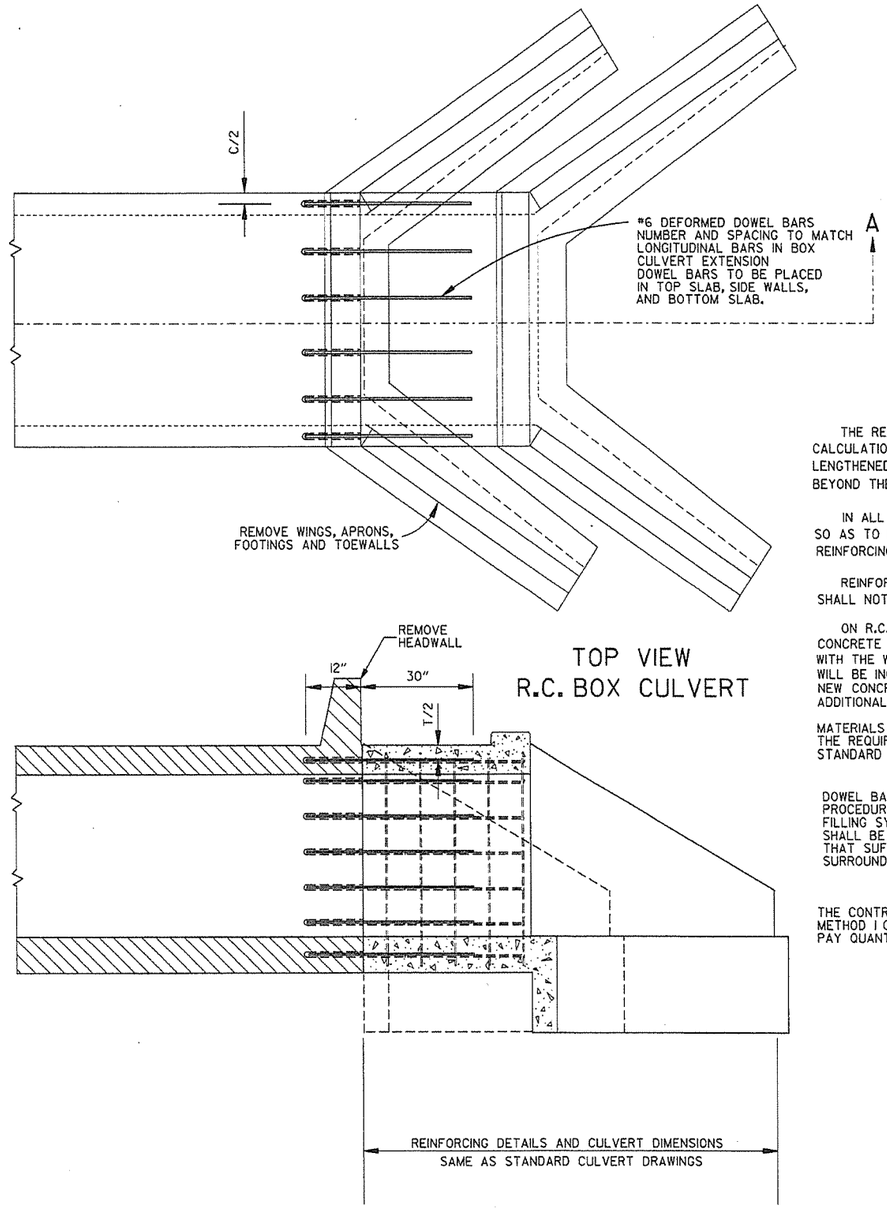

TOP VIEW
R.C. BOX CULVERT

SECTION A-A

METHOD 2

GENERAL NOTES

	USE FOR METHOD
THE RESIDENT ENGINEER WILL MAKE INDIVIDUAL CALCULATIONS OF QUANTITIES FOR EACH STRUCTURE LENGTHENED, MAKING NO ALLOWANCE FOR OVERBREAKAGE BEYOND THE LINES INDICATED.	1
IN ALL INSTANCES CONCRETE SHALL BE REMOVED SO AS TO PERMIT FULL 40 DIAMETER SPLICE OF REINFORCING STEEL.	1
REINFORCING STEEL REMOVED FROM EXISTING STRUCTURE SHALL NOT BE REUSED IN CONSTRUCTING EXTENSION.	1&2
ON R.C. BOX CULVERTS THAT HAVE AN EXISTING CONCRETE APRON; THE CONCRETE APRON SHALL BE REMOVED WITH THE WINGS. THE COST OF REMOVING ALL OLD CONCRETE WILL BE INCLUDED IN THE PRICE BID PER CUBIC YARD FOR NEW CONCRETE OF THE CLASS SPECIFIED AND NO ADDITIONAL COMPENSATION WILL BE ALLOWED.	1&2
MATERIALS FOR SECURING DOWEL BARS SHALL MEET THE REQUIREMENTS OF SECTION 507.02 OF THE STANDARD SPECIFICATIONS.	2
DOWEL BARS SHALL BE INSTALLED AS FOLLOWS: THE DRILLING PROCEDURE SHALL BE APPROVED BY THE ENGINEER, THE FILLING SYSTEM SHALL BE APPROVED BY THE ENGINEER, AND SHALL BE AN INJECTION-TYPE SYSTEM WHICH WILL INSURE THAT SUFFICIENT MATERIAL IS INJECTED SO IT COMPLETELY SURROUNDS THE BARS AND FILLS THE HOLES.	2
THE CONTRACTOR SHALL HAVE THE OPTION OF USING EITHER METHOD 1 OR METHOD 2, REGARDLESS OF WHICH METHOD IS USED, PAY QUANTITIES WILL BE CALCULATED BASED ON METHOD 1.	1&2

NOTE:
NO PART OF THIS STANDARD IS TO BE USED FOR ANY DETAILS RELATIVE TO NEW CONSTRUCTION.

SEE STANDARD DRAWING LISTED IN TABULATION OF STRUCTURES FOR ALL NEW CONSTRUCTION DETAILS.

DATE	REVISION	DATE FILM
10-12-95	CHANGED DRAWING # FROM 144-A	
4-1-93	ADDED GENERAL NOTE	
10-1-92	ADDED ALT. METHOD OF EXTENSION	
11-30-89	REDRAWN	
1-4-83	ELIMINATED CONCRETE CLASS	
12-20-56	RETRACED	

ARKANSAS STATE HIGHWAY COMMISSION

METHOD OF EXTENDING EXISTING R.C. BOX CULVERTS

STANDARD DRAWING RCB-3

DRAWER PLAN VIEW

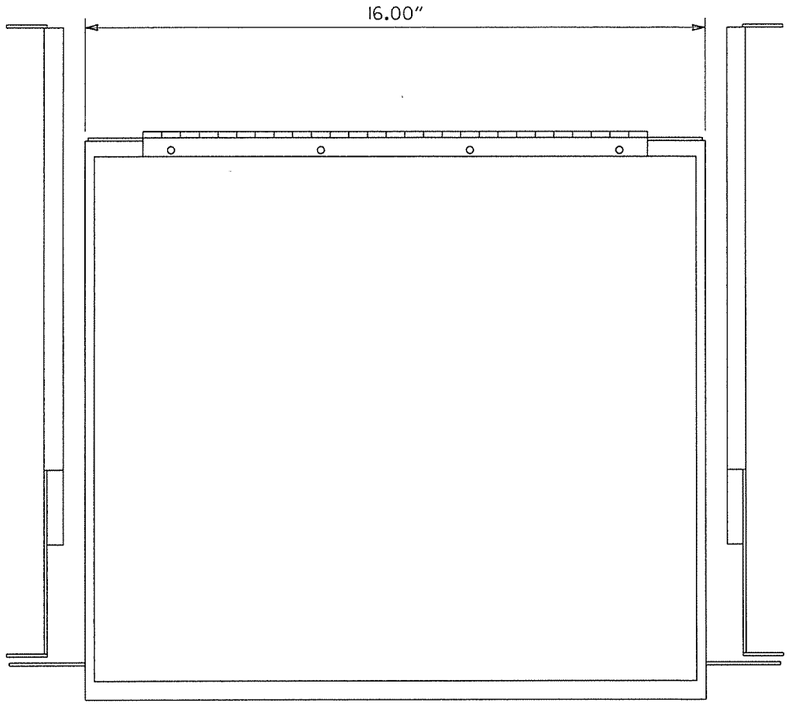

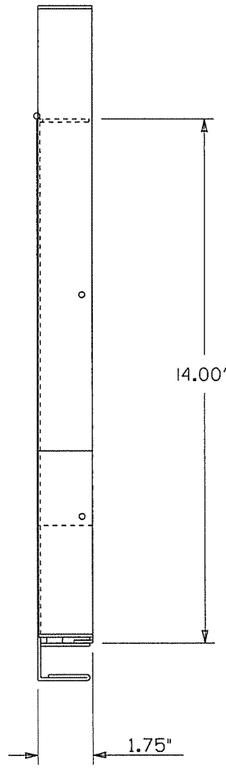

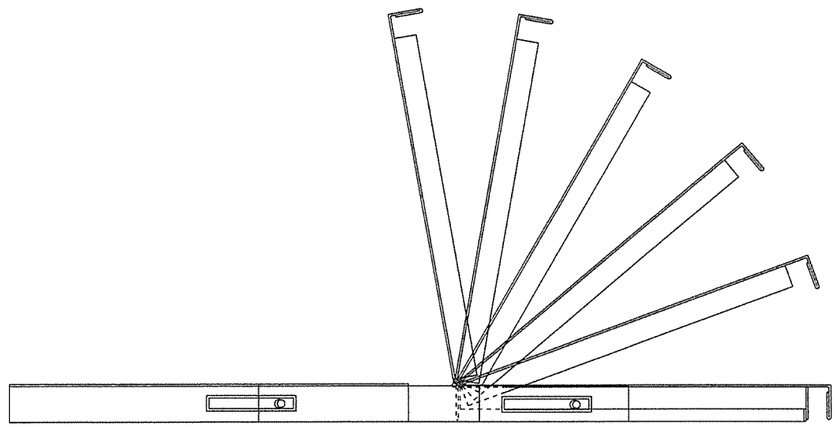

NOTES:
1. RIGHT HAND SLIDE SHOWN, LEFT SLIDE OPPOSITE.
2. GENERAL DEVICES (CC3002-99-0102) OR EQUAL AND CONTAINS (1) RIGHT HAND SLIDE ASSEMBLY, (1) LEFT HAND SLIDE ASSEMBLY.
3. ALL HARDWARE NECESSARY TO FASTEN SLIDE ASSEMBLY TO UNDERSIDE OF CONTROLLER SHELF SHALL BE INCLUDED.

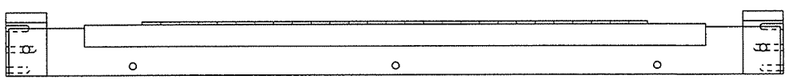

FRONT VIEW

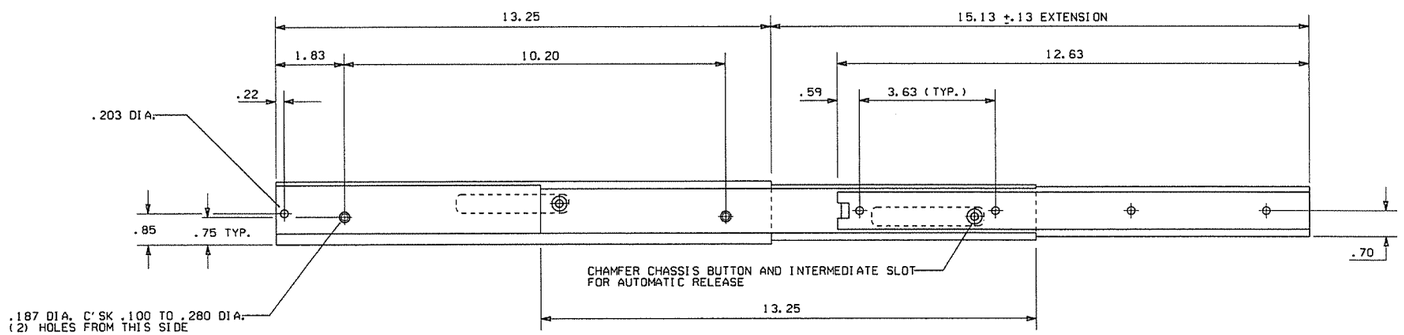

RIGHT SIDE ASSEMBLY

DATE	REVISION	DATE FILM
9-12-13	ISSUED AS STANDARD DRAWING	
6-15-05	ISSUED	

ARKANSAS STATE HIGHWAY COMMISSION

CONTROLLER CABINET
UTILITY DRAWER

STANDARD DRAWING SD-5

CONDUIT ENTRY TO EXISTING POLE BASE

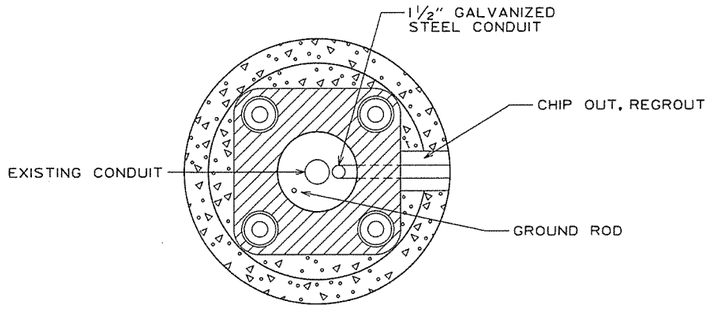

ANCHOR BASE

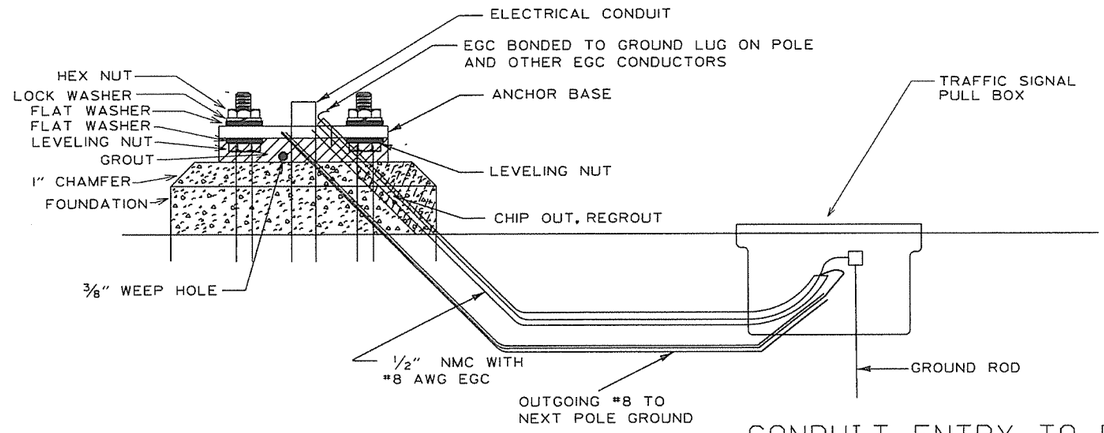

CONDUIT ENTRY TO EXISTING CONTROLLER CABINET

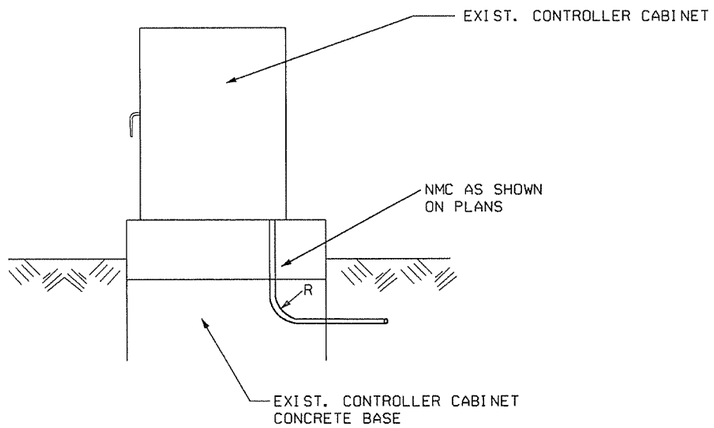

NOTE: ENTRY TO CABINET SHALL BE THROUGH A CUT IN THE BASE SUFFICIENT TO PROVIDE ADEQUATE CONDUIT RADIUS FOR ITEM.

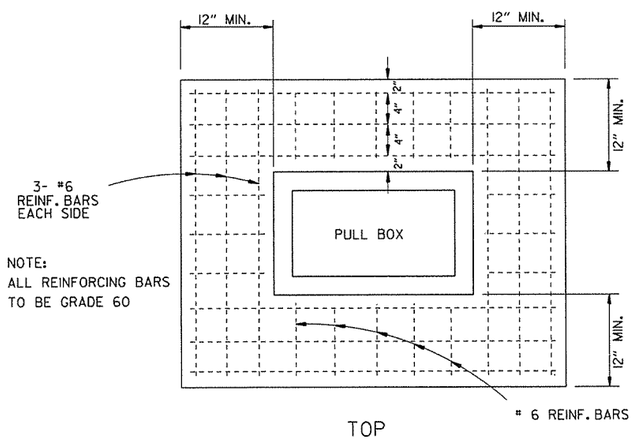

NOTE:
ALL REINFORCING BARS TO BE GRADE 60

TOP

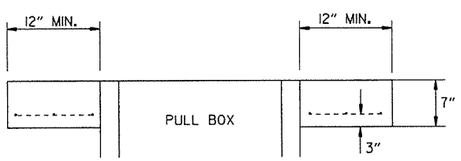

ELEVATION

TYPE "HD" CONCRETE PULL BOX DETAIL

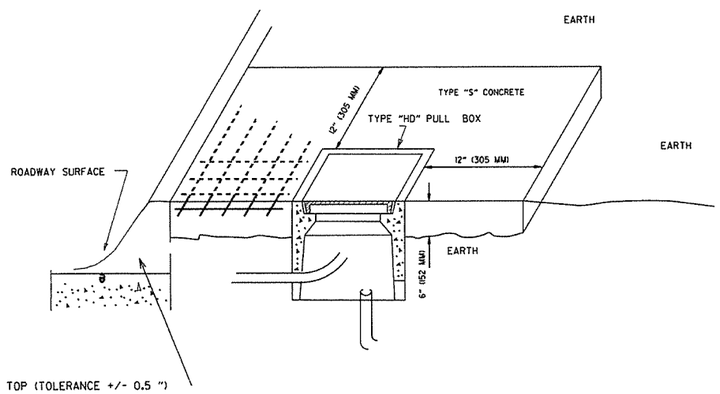

NOTE: ALL TYPE I AND TYPE 2 HD PULL BOXES ARE INSTALLED WITH AN APRON OF CONCRETE 12" (305 MM) WIDE AND 6" (152 MM) IN DEPTH. ALL PAYMENT SHALL BE INCLUDED IN THE PRICE OF THE TYPE HD PULL BOX. PULL BOX SHALL BE INSTALLED FLUSH TO SURROUNDING GRADE UNLESS OTHERWISE INSTRUCTED BY THE ENGINEER. THE CONCRETE SHALL BE CLASS "S." THREE #6 REINFORCING BARS IN THE APRON ON ALL SIDES OF THE PULL BOX IS REQUIRED IN CONCRETE.

DATE	REVISION	DATE FILM
9-12-13	ISSUED AS STANDARD DRAWING	
5-21-09	REVISED GROUNDING	
7-31-08	ADDED & REVISED CONDUIT ENTRY	
6-23-04	REVISED CLEARANCE AT CURB ENTRY	
1-4-02	ADDED REINFORCING TO BOX APRON	
7-2-01	REVISED	
12-27-99	REVISED NOTES	
11-18-98	ISSUED	

ARKANSAS STATE HIGHWAY COMMISSION

HEAVY DUTY PULL BOX

STANDARD DRAWING SD-6

(A)

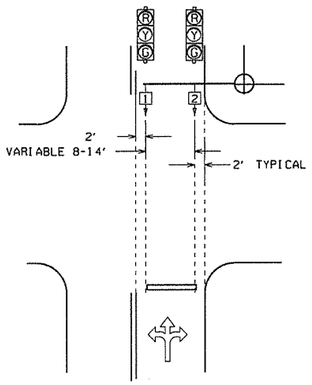

(B)

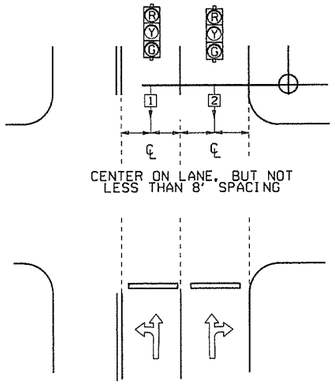

(C)

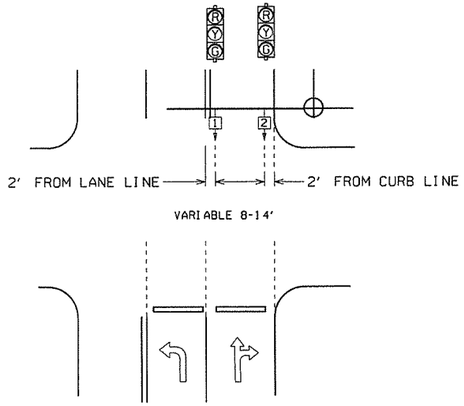

(C2)

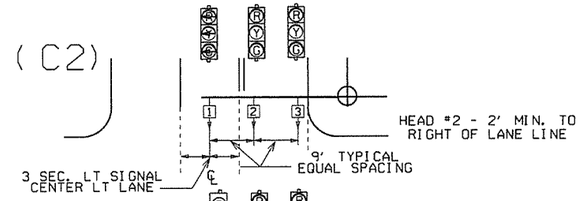

(C1)

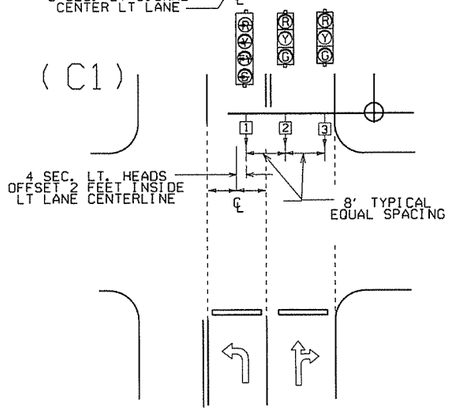

(C3)

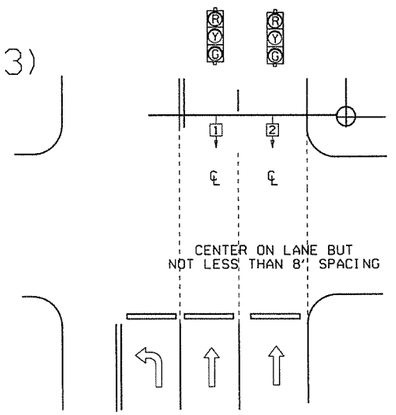

(D2)

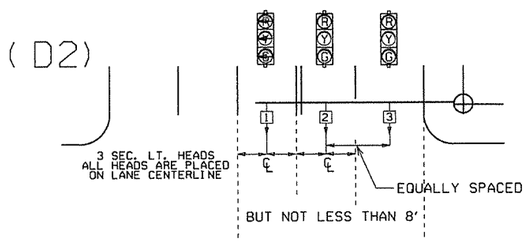

(D1)

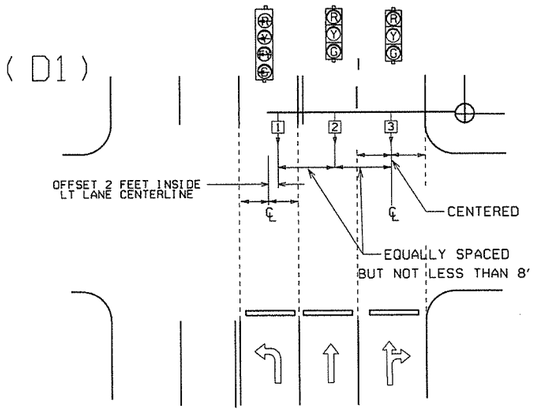

NOTE: WHERE LEFT TURN HEAD (HEAD 1 ON D1 AND D2) IS NOT CALLED FOR ON PLANS, MAST ARM LENGTH MAY STILL BE ALLOWED FOR FUTURE INSTALLATION. HEADS FOR THROUGH MOVEMENTS SHALL STILL BE ALIGNED WITH THROUGH LANES AS SHOWN ON DETAILS.

(E)

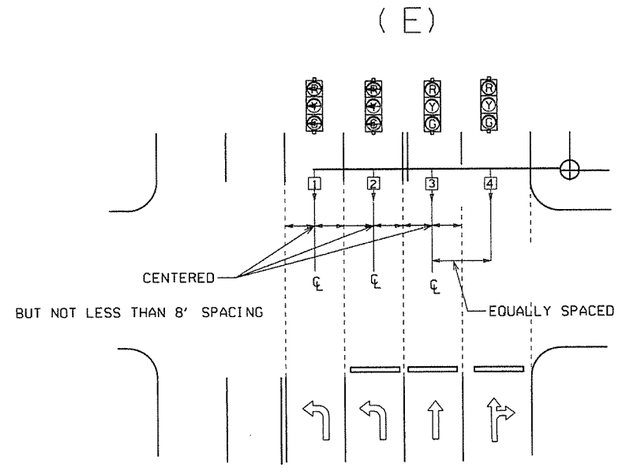

℄ = CENTER OF LANE FROM APPROACH SIDE

GENERAL NOTES:

1. FOUR SECTION 'PROTECTED/PERMISSIVE' LEFT TURN HEADS SHOULD BE PLACED A MINIMUM OF TWO (2') FEET TO THE RIGHT OF THE CENTERLINE OF THE APPROACHING LEFT TURN LANE.

2. THREE SECTION 'PROTECTED' LEFT TURN HEADS SHOULD BE PLACED ON THE CENTERLINE OF THE APPROACHING LEFT TURN LANE.

3. WHEN IT IS NECESSARY TO PLACE POLES OTHER THAN AS SHOWN ON PLAN SHEET(S) RESULTING IN MAST ARM EXTENDING MORE THAN TWO FEET PAST (TO THE LEFT OF) THE CENTERLINE OF THE APPROACHING LEFT TURN LANE, MAST ARM SHALL BE CUT TO APPROPRIATE LENGTH AS DETERMINED BY THE ENGINEER, AND A NEW END CAP PROVIDED. THE CONTRACTOR SHALL BE RESPONSIBLE FOR DETERMINING THIS PRIOR TO INSTALLING THE MAST ARM IF ADDITIONAL COMPENSATION IS REQUIRED.

4. SIGNAL HEAD SPACING SHALL, IN NO CASE, BE LESS THAN EIGHT (8') FEET BETWEEN HEADS ON CENTER, MEASURED HORIZONTALLY PERPENDICULAR TO THE APPROACH.

5. ALL SIGNAL HEADS SHOWN ON THIS DETAIL SHEET SHALL BE LOCATED ACCORDING TO THE DIMENSIONS SHOWN IN RELATION TO THE APPROACH SIDE OF THE INTERSECTION.

6. MAXIMUM MOUNTING HEIGHT OF SIGNAL FACES LOCATED BETWEEN 40 FEET AND 53 FEET FROM STOP BAR SHALL BE IN ACCORDANCE WITH FIGURE 4D-1 OF 2009 MUTCD.

			ARKANSAS STATE HIGHWAY COMMISSION
9-12-13	ISSUED AS STANDARD DRAWING		SIGNAL HEAD PLACEMENT
3-11-10	2009 MUTCD		
12-9-99	ISSUED		
DATE	REVISION	DATE FILM	STANDARD DRAWING SD-8

MAIN BREAKER NOT NEAR CONTROLLER CABINET SECONDARY REQUIRED

WITH POWER ISOLATION ASSEMBLY

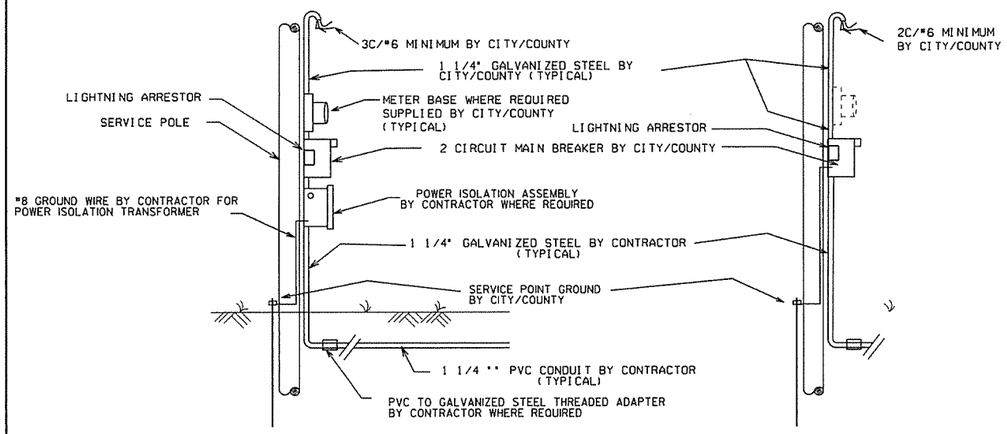

WITHOUT POWER ISOLATION ASSEMBLY

GROUND ROD-A 10' X ⅝" GROUND ROD SHALL BE INSTALLED IN THE PULL BOX FOR EACH POLE AND THE CONTROLLER. PAYMENT FOR THE GROUND ROD AND ½" NMC SHALL BE INCLUDED IN ITEM 701. THE PULL BOX AND CONDUCTOR BOX SHALL BE PAID FOR SEPARATELY.

SECONDARY BREAKER BY CONTRACTOR (SUBSIDIARY)

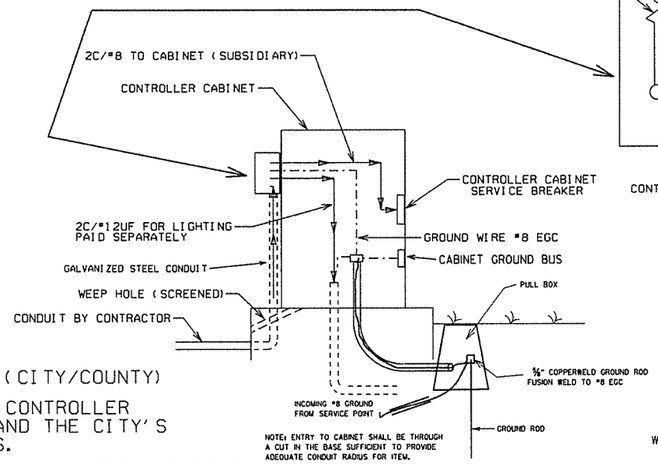

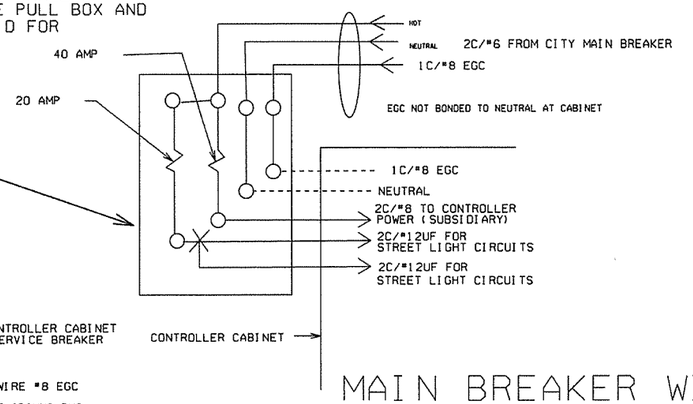

MAIN BREAKER WIRING (TYPICAL)

NOTES TO CONTRACTOR AND AGENCY RESPONSIBLE FOR MAINTENANCE OF THE INTERSECTION (CITY/COUNTY)

ELECTRICAL SERVICE TYPICALLY FALLS INTO TWO CATEGORIES: MAIN BREAKER NEAR CONTROLLER CABINET; AND MAIN BREAKER NOT NEAR CONTROLLER CABINET. THE CONTRACTOR'S AND THE CITY'S OR COUNTY'S RESPONSIBILITY VARIES ACCORDINGLY AS INDICATED ON THESE DETAILS.

1. ALL SITUATIONS: ELECTRICAL SERVICE SHALL BE PROVIDED BY THE CITY/COUNTY TO A SERVICE POLE WITH EXTERNAL RAINTIGHT BREAKER (MAIN BREAKER) AT A MUTUALLY ACCEPTABLE POINT WITHIN THE RIGHT-OF-WAY. SERVICE POINT INCLUDES GALVANIZED STEEL CONDUIT TO A POINT 18" BELOW GROUND LINE, TWO CIRCUIT MAIN BREAKER, LIGHTNING ARRESTOR, POWER ISOLATION ASSEMBLY WHERE REQUIRED, METER LOOP IF REQUIRED BY LOCAL UTILITY, ELECTRICAL CONDUCTORS AND WEATHERHEAD. WHERE STREET LIGHTING IS INCLUDED AS PART OF SIGNAL INSTALLATION, STREET LIGHTING CIRCUIT (2C/#12 AWG UF RATED, TYPICAL) SHALL BE KEPT SEPARATE FROM THE CIRCUIT SERVING TRAFFIC SIGNAL. SERVICE WIRE AND WIRING FROM THE CONTROLLER TO MAIN BREAKER IS PROVIDED BY THE CONTRACTOR AS A PART OF THIS CONTRACT. WIRE AND WIRING FROM MAIN BREAKER, AND CONNECTION TO THE UTILITY IS THE RESPONSIBILITY OF THE CITY/COUNTY.

2. MAIN BREAKER NOT NEAR CONTROLLER CABINET: THE MAIN BREAKER ASSEMBLY, GALVANIZED STEEL CONDUIT, WEATHERHEAD AND WIRE ABOVE MAIN BREAKER AND CONNECTION TO THE UTILITY SHALL BE PROVIDED BY CITY/COUNTY. CONTRACTOR SHALL PROVIDE AS PART OF CONTRACT SECONDARY BREAKER, CONDUIT, WIRE AND WIRING TO THE MAIN BREAKER.

3. MAIN BREAKER NEAR CONTROLLER CABINET: ALL COMPONENTS OF THE SERVICE POINT WITH THE EXCEPTION OF THE WIRE AND WIRING ABOVE THE MAIN BREAKER IS FURNISHED AND INSTALLED BY THE CONTRACTOR. WIRING FROM MAIN BREAKER INCLUDING CONNECTION TO THE UTILITY, IS THE RESPONSIBILITY OF THE CITY/COUNTY. IF METER LOOP IS REQUIRED, METER BASE AND HARDWARE IS PROVIDED BY THE CITY/COUNTY AND INSTALLED BY THE CONTRACTOR.

SERVICE GROUND IS TYPICALLY TIED TO NEUTRAL AT THE MAIN BREAKER. AS SUCH, CONTROLLER GROUND IS NOT TIED TO NEUTRAL AT SECONDARY BREAKER OR IN CONTROLLER CABINET.

WITH POWER ISOLATION ASSEMBLY
4 CIRCUIT MAIN BREAKER

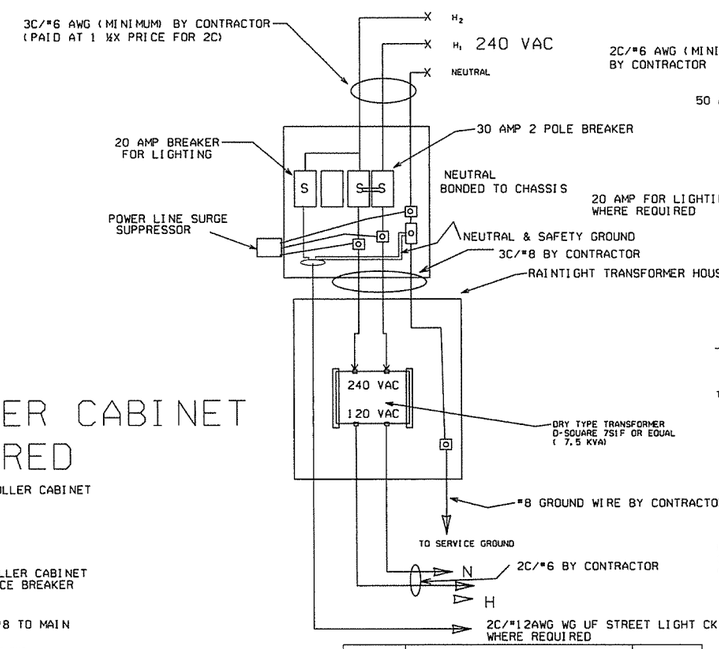

WITHOUT POWER ISOLATION ASSEMBLY
2 CIRCUIT MAIN BREAKER

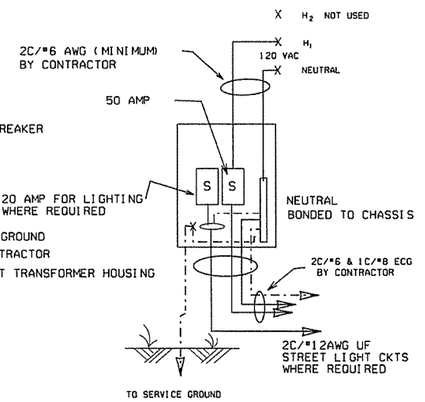

NOTE: ELECTRICAL GROUND CONDUCTOR (EGG) ADDED 3-3-2003, CONSISTING OF A 1C/#8AWG CU GREEN WIRE AS PER NATIONAL ELECT. CODES.

MAIN BREAKER NEAR CONTROLLER CABINET SECONDARY NOT REQUIRED

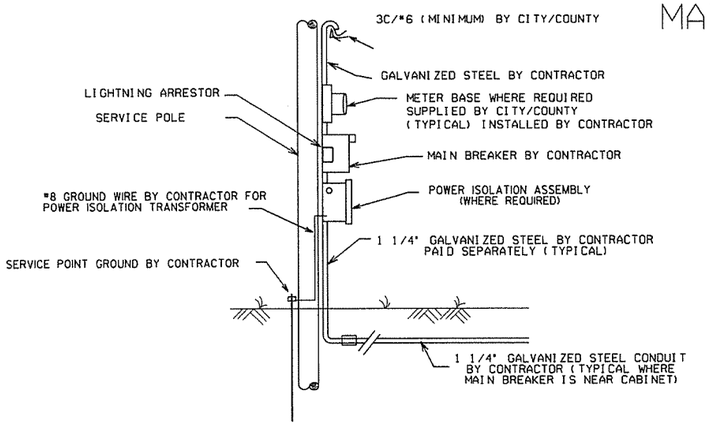

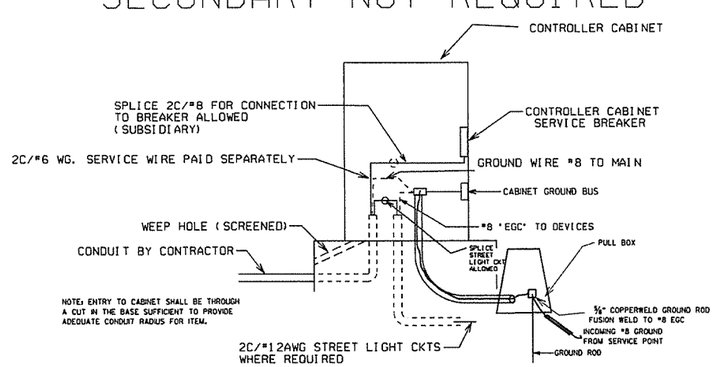

DATE	REVISION	DATE FILM
9-12-13	ISSUED AS STANDARD DRAWING	
4-18-13	ADDED LIGHTNING ARRESTOR	
5-21-09	REVISED GROUNDING	
7-31-08	REVISED GROUNDING	
3-3-03	ADDED EGC NOTE	
9-26-01	REVISED	
12-27-99	REVISED	
7-28-99	REVISED	
2-5-99	ISSUED	

ARKANSAS STATE HIGHWAY COMMISSION

SERVICE POINT

STANDARD DRAWING SD-9

NOTES, PED AND TRAFFIC SIGNAL HEAD SIGNS:
EACH ITEM "TRAFFIC SIGNAL HEAD (4 SEC., 1-WAY)" SHALL INCLUDE A SPECIAL SIGN AS SHOWN, ATTACHED TO THE MAST ARM OR SPAN ASSEMBLY 12" TO THE RIGHT OF THE SIGNAL HEAD UNLESS REMOVED WITHIN THE SIGNAL PLAN NOTES.

EACH ITEM "TRAFFIC SIGNAL HEAD (3 SEC., 1-WAY)" TO BE USED AS A LEFT TURN INDICATION ONLY SHALL INCLUDE A SIGN (R10-10) AS SHOWN, ATTACHED TO THE MAST ARM OR SPAN ASSEMBLY 12" TO THE RIGHT OF THE SIGNAL HEAD.

EACH PEDESTRIAN PUSHBUTTON SHALL HAVE ONE R10-3E SIGN ATTACHED TO THE POLE ABOVE THE BUTTON. ALL SIGN FACES SHALL BE CONSTRUCTED OF HIGH INTENSITY SHEETING (TYPE III) WITH SILKSCREEN LEGEND AND BORDER.

ALL SIGN BLANKS SHALL BE CONSTRUCTED OF ALUMINUM ALLOY (ASTM DESIGNATION B-209. ALLOY 5052-H38) WITH THICKNESS OF 0.100 INCH.

GENERAL NOTES:
1. MAST ARM POLES SHALL BE MOUNTED A MINIMUM OF 4 FT. BEHIND CURB OR SHOULDER.

2. OCTAGONAL POLES AND ARMS MEETING THE REQUIREMENTS OF THE PLANS AND SPECIFICATIONS CAN BE INSTALLED IN LIEU OF ROUND. ALL POLES AND ARMS IN A JOB MUST BE THE SAME SHAPE.

3. MINIMUM STRUCTURAL REQUIREMENTS:
DESIGN SPECIFICATIONS: AASHTO STANDARD SPECIFICATIONS FOR STRUCTURAL SUPPORTS FOR HIGHWAY SIGNS, LUMINAIRES AND TRAFFIC SIGNALS, 4TH EDITION (2001) WITH 2003 AND 2006 INTERIMS.

USE FATIGUE CATEGORY I FOR ALL STRUCTURES ON ROUTES WHERE THE SPEED LIMIT IS 65 MPH AND GREATER AT THE STRUCTURE LOCATION AND ON ROUTES WHERE SPEED LIMIT IS GREATER THAN 45 MPH WITH AN ARM 60' OR LONGER.

USE FATIGUE CATEGORY II FOR STRUCTURES ON ROUTES WITH A SPEED LIMIT LESS THAN 65 MPH AND GREATER THAN 45 MPH WITH ARMS LESS THAN 60' AND ROUTES WITH SPEED LIMITS OF 45 MPH AND LESS WITH AN ARM 60' OR LONGER.

USE FATIGUE CATEGORY III FOR ALL STRUCTURES WHERE SPEED LIMIT IS 45 MPH AND LESS AND ARMS LESS THAN 60'.

CONSTRUCTION SPECIFICATIONS: ARKANSAS STATE HIGHWAY AND TRANSPORTATION DEPARTMENT STANDARD SPECIFICATIONS FOR HIGHWAY CONSTRUCTION (CURRENT EDITION) WITH APPLICABLE SUPPLEMENTAL SPECIFICATIONS AND SPECIAL PROVISIONS.

BASE WIND SPEED: 90 MPH.

STEEL MEMBERS CONSIDERED MAIN LOAD CARRYING MEMBERS WITH A THICKNESS GREATER THAN 1/2" SHALL MEET THE LONGITUDINAL CHARPY V-NOTCH TEST SPECIFIED IN SUBSECTION 807.05 OF THE STANDARD SPECIFICATIONS.

DEAD LOAD: AS A MINIMUM, DESIGN SHALL BE BASED ON THE FIXED ATTACHMENTS SHOWN BELOW OR AS MODIFIED IN THE PLANS.

ALL SIGNAL HEADS TO BE ONE WAY, 12 INCH, AND HAVE 5 IN. BACK PLATES.

HEADS AT END OF ARM - ONE 4 SEC., 85 LB., 16.0 SQ. FT. ONE SIGN MOUNTED 3 FT. FROM SIGNAL * 2' X 0" X 2' * 6"; 20 LB. REMAINING HEADS SPACED A 8 FT. * 3 SEC., 56 LB., TWO 5 SEC):
14.4 SQ. FT. DESIGN TO ACCOMMODATE (INCLUDING
2 HEADS FOR ARMS 10 TO 16 FT.
2 HEADS FOR ARMS 10 TO 16 FT.; INCLUDING LB.
3 HEADS FOR 18 TO 24 FT. ARMS;
4 HEADS FOR OVER 26 FT. ARMS.

STREET NAME SIGN -- 72" X 18", 36 LB., MOUNTED SUCH THAT OUTSIDE EDGE IS NOT GREATER THAN 12 FT. FROM POLE. DEPENDING UPON POSITION OF SIGNAL HEAD ADJACENT TO POLE, SIGN MAY OVERLAP POLE SHAFT ROADWAY LUMINAIRES (WHERE REQUIRED ON PLAN SHEET) * VARIABLE ARM LENGTH (MAX.), 3.3 SQ. FT., 75 LB. PED SIGNALS -- TWO 2 SEC. 12 INCH MOUNTED 8 FT. FROM BASE OF POLE.
POST MOUNTED 3 SEC. SIGNAL HEAD AT 10 FT. ON SIDE OF POLE.

4. POLE/MAST ARM CAP -- POLE AND MAST ARMS CAPS SHALL BE PROVIDED, FABRICATED OF EITHER STEEL OR CAST ALUMINUM.

5. HAND HOLE -- HAND HOLES SHALL BE 4 X 6 INCHES FOR STANDARD, AND 3 X 5 INCHES FOR PED POLES, MINIMUM PLACED APPROXIMATELY 12 INCHES FROM BASE, AND SHALL BE FIXED WITH A BOLT DOWN COVER. A VACUUM FORMED ABS COVER IS AN ACCEPTABLE ALTERNATE TO STEEL. POLES GREATER THAN 21 FT. IN HEIGHT (FOR ROADWAY LUMINAIRE ATTACHMENT) SHALL INCLUDE A HAND HOLD WITHIN 12 INCHES OF MAST ARM(S) ATTACHMENT(S).

6. POLE/MAST ARM TAPER AND SLOPE - AVERAGE TAPER OF SIGNAL ARMS AND POLE SHALL BE 0.125 TO 0.15 INCHES PER FT.

MAST ARM CENTERLINE ANGLE AT ATTACHMENT POINT WITH POLE SHALL MAINTAIN NOT LESS THAN 0.5 DEGREES OR MORE THAN 4 DEGREES POSITIVE SLOPE WITH A LINE PERPENDICULAR TO THE POLE CENTERLINE. THE ARM SHALL MAINTAIN A POSITIVE AFTER IT IS PLACED UNDER LOAD.

7. NUT COVERS - EACH POLE SHALL INCLUDE A BOLT DOWN NUT COVER FOR EACH ANCHOR BOLT.

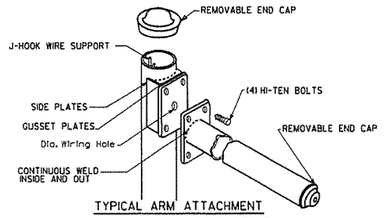

TYPICAL ARM ATTACHMENT

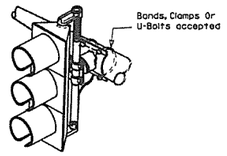

NOTE: THE SIGNAL SHALL BE CONNECTED TO THE MAST ARM BY BRACKETING AS DIRECTED BY THE ENGINEER.

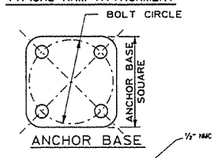

ANCHOR BASE

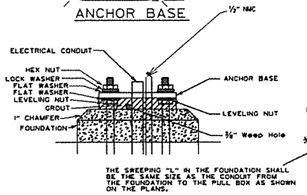

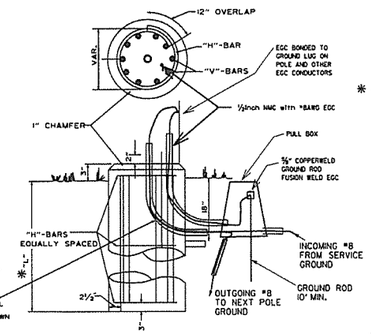

THE GROUND ROD SHALL BE FUSION WELDED TO A 1C/#8 A.W.G. SOLID COPPER GROUND WIRE. ATTACHMENT TO THE PRIMARY GROUND MAY BE BY AN APPROVED CLAMP. THE ROD IS TO BE LOCATED IN THE CONCRETE PULL BOX.

TYPICAL FOUNDATION DETAILS

POLE FOUNDATION MINIMUM DIMENSIONS AND STEEL REINFORCING. ALL REINFORCING STEEL SHALL BE GRADE 40 MIN.

ARM LENGTH	FDN. DIAMETER	DEPTH "L" *	STEEL VERT.	STEEL HORZ.	STEEL O/C.
PED	30"	7'-0"	12-#7 (6'-6")	10-#4	8.44"
2' to 12'	30"	10'-6"	12-#7 (10'-0")	15-#4	8.42"
over 12' to 20'	30"	11'-6"	12-#7 (11'-0")	16-#4	8.66"
over 20' to 35'	36"	12'-6"	13-#8 (12'-0")	17-#4	8.88"
over 35' to 50'	36"	13'-6"	13-#8 (13'-0")	19-#4	8.56"
over 50' to 72'	42"	14'-6"	18-#8 (14'-0")	20-#4	8.74"
Twins to 20'	30"	16'-0"	12-#6 (15'-6")	22-#4	8.76"
Twins over 20' to 44'	36"	16'-0"	13-#8 (15'-6")	22-#4	8.76"
Twins over 44' to 50'	42"	16'-0"	18-#8 (15'-6")	22-#4	8.76"
Twins over 50' to 72'	42"	16'-6"	18-#8 (16'-0")	23-#4	8.64"

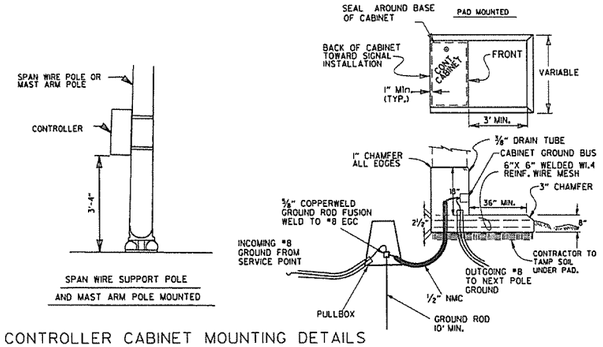

CONTROLLER CABINET MOUNTING DETAILS

UNLESS OTHERWISE DIRECTED BY THE ENGINEER, CABINET ORIENTATION SHALL BE SUCH THAT THE BACK OF THE CABINET IS PARALLEL TO THE STREET AND POSITIONED TO ALLOW VISIBILITY OF THE SIGNAL DISPLAY WHILE OBSERVING THE CONTROLLER FRONT PANEL.

8. GROUND ROD - A 10' X 5/8" GROUND ROD SHALL BE INSTALLED IN THE PULL BOX FOR EACH POLE AND THE CONTROLLER. PAYMENT FOR THE GROUND ROD AND 1/2" NMC SHALL BE INCLUDED IN ITEM 714 FOR SIGNAL POLES AND ITEM 701 FOR THE CONTROLLER. THE PULL BOX AND CONDUCTOR BOX SHALL BE PAID FOR SEPARATELY.

9. POLE BASE/FOUNDATION - ANCHOR BOLTS SHALL INCLUDE AS A MINIMUM, ONE LEVELING NUT, TWO FLAT WASHERS, ONE LOCK WASHER, AND ONE HEX. NUT. PERIMETER OF ANCHOR BASE SHALL BE GROUTED WITH A 1/4" WEEP HOLE. ALL CONCRETE SHALL BE CLASS "S" OR GREATER.

10. CONCRETE - ALL CONCRETE FOR CONTROLLER CABINET AND POLE FOUNDATIONS SHALL BE CLASS "S" OR GREATER.

11. PEDESTRIAN PHASES - PEDESTRIAN MOVEMENTS SHALL BE PUSH BUTTON ACTUATED AND CONCURRENTLY TIMED, UNLESS OTHERWISE INDICATED ON THE PLAN SHEET(S). FURNISHING AND INSTALLING PED PUSH SWITCH SHALL BE CONSIDERED SUBSIDIARY TO THE ITEM PEDESTRIAN SIGNAL HEAD.

SIGNAL OPERATION NOTES:

FLASHING OPERATION - PRIOR TO NORMAL OPERATION, SIGNAL SHALL BE FLASHED FOR A PERIOD OF 3 TO 5 WORK DAYS OR AS DIRECTED BY THE ENGINEER. SIGNAL SHALL BE PLACED IN OPERATION ONLY ON A REGULAR WORK DAY, EXCEPT FRIDAY.

THE CONTRACTOR MAY BE REQUIRED TO ALTER THE FLASHING DISPLAY DURING THE TEMPORARY FLASH PERIOD, AT THE TIME INTERSECTION IS PLACED IN PERMANENT OPERATION, THE FLASH SEQUENCE SHALL THEN BE RETURNED TO THAT INDICATED ON THE PLAN SHEETS. NO ADDITIONAL COMPENSATION SHALL BE ALLOWED FOR THESE ALTERATIONS IN FLASH SEQUENCE.

SPECIAL NOTE: 90 MPH WIND ZONE DESIGN, SEE NOTE 3. MINIMUM STRUCTURAL REQUIREMENTS.

* WHEN THE GROUND ELEVATION AT THE POLE IS LOWER THAN THE ROADWAY ELEVATION, THE LENGTH OF FOUNDATION ABOVE THE GROUND MAY BE INCREASED TO PROVIDE THE REQUIRED SIGNAL HEAD CLEARANCE ABOVE THE ROADWAY. WHEN THE REQUIRED LENGTH OF FOUNDATION ABOVE THE GROUND IS 18" OR LESS, NO INCREASE IN DEPTH "L" WILL BE REQUIRED. WHEN THE REQUIRED LENGTH OF FOUNDATION ABOVE THE GROUND IS 5'-6" OR LESS, INCREASE DEPTH "L" BY 1'-0". FOR LENGTHS GREATER THAN 5'-6", DEPTH "L" SHALL BE ADJUSTED AS DIRECTED BY THE ENGINEER. LONGITUDINAL REINFORCING, AS SHOWN IN THE TABLE, SHALL BE PROVIDED FOR THE LENGTH OF THE EXTENDED SHAFT AND #4 TIES SHALL BE PROVIDED AT A SPACING NOT TO EXCEED 9" ON CENTERS. PAYMENT WILL BE IN ACCORDANCE WITH SECTION 714 OF THE STANDARD SPECIFICATIONS.

** IN LIEU OF DESIGNING THE STRUCTURE TO RESIST PERIODIC GALLOPING, A VIBRATORY MITIGATION DEVICE MAY BE PROVIDED BY THE POLE MANUFACTURER. THE VIBRATORY MITIGATION DEVICE SHALL BE AN ANTI-GALLOPING PANEL CONSISTING OF A 60"X6"X0.125" SIGN BLANK MOUNTED NEAR THE END OF THE MAST ARM NOT TO EXCEED ONE QUARTER OF THE LENGTH OF THE MAST ARM FROM THE END OF THE MAST ARM WITH THE LONG AXIS OF THE PANEL COLLINEAR WITH THE LONG AXIS OF THE MAST ARM. THE PANEL SHOULD BE MOUNTED AT SUCH A HEIGHT AS TO PROVIDE AT LEAST 6" CLEAR FROM THE TOP OF ANY SIGNAL ASSEMBLY OR SIGN PANEL LOCATED ON THE MAST ARM WITHIN THE LENGTH OF THE ANTI-GALLOPING PANEL.

TRUCK-INDUCED GUST LOADS SHALL BE EXCLUDED FOR FATIGUE DESIGN FOR ALL STRUCTURES EXCEPT MAST ARMS MOUNTED OVER FACILITIES WITH POSTED SPEEDS OF 65 MPH OR GREATER AT THE LOCATION OF THE STRUCTURE.

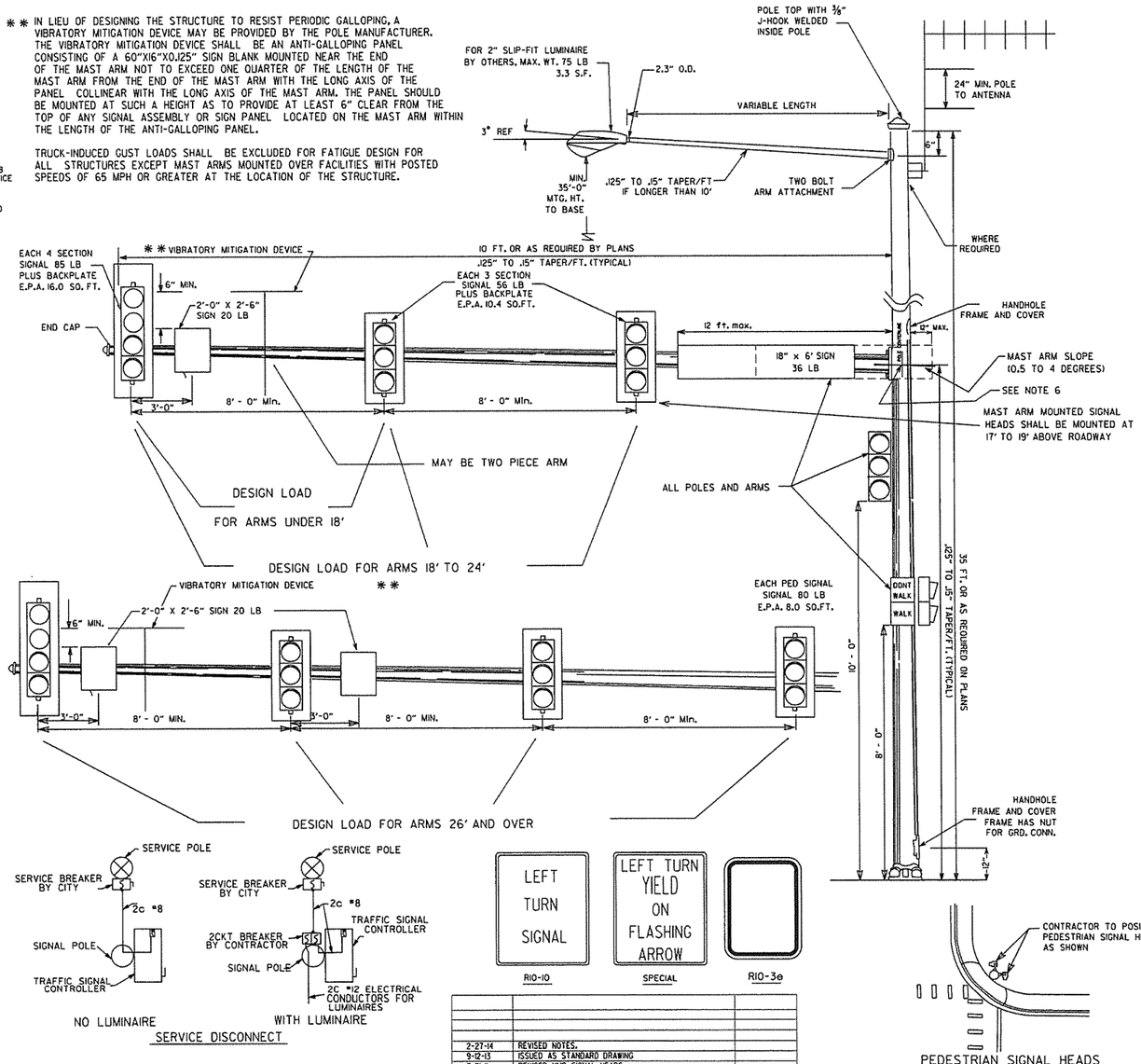

2-27-14	REVISED NOTES.	
9-12-13	ISSUED AS STANDARD DRAWING	
7-21-11	REVISED VMD, SIGNAL HEADS	
5-21-09	REVISED GROUNDING	
7-31-08	REVISED GROUNDING	
4-25-08	ADDED VIBRATORY MITIGATION DEVICE & NOTES	
4-18-08	REVISED AASHTO NOTES	
4-17-08	REVISED TO 2001 AASHTO STANDARDS	
10-12-04	REVISED CABINET ORIENTATION	
6-23-04	REVISED	
5-3-04	REV. NOTE 3/AASHTO REQUIREMENTS	
5-11-01	REV. NOTES & POLE MAST ARM SLOPE	
4-8-01	REVISED POLE TAPERS	
4-25-00	REV. NOTES & SIGNAL HEAD PLACEMENT	
8-22-99	REVISED FOUNDATION DETAILS	
11-17-98	REVISED DETAILS AND NOTES	
11-21-95	ISSUED	

ARKANSAS STATE HIGHWAY COMMISSION

STEEL POLE WITH MAST ARM

SUPERELEVATION TABLE FOR ONE - WAY TRAFFIC

DEGREE OF CURVE	30 MPH			40 MPH			50 MPH			55 MPH			60 MPH			65 MPH			70 MPH		
	e	Ls (FT)		e	Ls (FT)		e	Ls (FT)		e	Ls (FT)		e	Ls (FT)		e	Ls (FT)		e	Ls (FT)	
		MINIMUM	DESIRABLE		MINIMUM	DESIRABLE		MINIMUM	DESIRABLE		MINIMUM	DESIRABLE		MINIMUM	DESIRABLE		MINIMUM	DESIRABLE		MINIMUM	DESIRABLE
0° 15′	N.C.			N.C.			N.C.			N.C.			N.C.			N.C.			N.C.		
0° 30′	N.C.			N.C.			N.C.			N.C.			N.C.			N.C.			N.C.		
0° 45′	N.C.			N.C.			R.C.			0.022			0.023			0.025			0.028		
1° 00′	N.C.			N.C.			0.021			0.026			0.030			0.033	250		0.037	275	
1° 15′	N.C.			R.C.			0.026			0.032			0.037	250		0.041		350	0.046		350
1° 30′	N.C.			0.021			0.031	200		0.037	225		0.043		350	0.048			0.054		
1° 45′	N.C.			0.025	175		0.036			0.043		350	0.049			0.055			0.062		
2° 00′	R.C.			0.028			0.040			0.048			0.055			0.062			0.070		
2° 15′	R.C.			0.031			0.045			0.053			0.061			0.069	265		0.078	300	
2° 30′	0.021			0.034			0.049		300	0.058			0.067			0.075	280		0.085	315	400
2° 45′	0.023			0.037			0.053			0.063			0.072			0.081	300		0.091	335	
3° 00′	0.025	150		0.040		250	0.057			0.067	230		0.077	260		0.087	315		0.096	350	
3° 15′	0.027			0.043			0.061			0.072	245		0.082	275		0.090	325	400	0.098	360	450
3° 30′	0.029			0.046			0.065	205		0.076	255		0.086	285	400	0.095	340		0.100	360	
3° 45′	0.031			0.049			0.069	215		0.080	265		0.090	295		0.097	345				
4° 00′	0.033			0.051			0.072	225		0.083	270		0.093	305		0.099	350				
4° 30′	0.037			0.056			0.078	240		0.087	280		0.096	315							
5° 00′	0.040			0.061			0.083	250		0.091	295	400	0.098	320							
5° 30′	0.043			0.066	185		0.088	260		0.094	300										
6° 00′	0.046			0.070	190		0.092	270		0.096	305										
6° 30′	0.050			0.074	200		0.095	280	350	0.100	315										
7° 00′	0.053			0.078	210		0.098	285													
7° 30′	0.056			0.081	215		0.099	290													
8° 00′	0.058			0.084	220		0.100	290													
8° 30′	0.061			0.087	225	300															
9° 00′	0.063			0.089	230																
10° 00′	0.068	160		0.094	235																
11° 00′	0.072	170		0.097	250																
12° 00′	0.076	175		0.099	250																
13° 00′	0.080	180		0.100	250																
14° 00′	0.083	190																			
15° 00′	0.086	195																			
16° 00′	0.089	200																			
17° 00′	0.091	200																			
18° 00′	0.093	205																			
19° 00′	0.095	210																			
20° 00′	0.097	215	300																		
21° 00′	0.098	215																			
22° 00′	0.099	215																			
23° 00′	0.099	215																			
24° 00′	0.100	220																			

D MAX = 24° 45′ | D MAX = 13° 15′ | D MAX = 8° 15′ | D MAX = 6° 30′ | D MAX = 5° 15′ | D MAX = 4° 15′ | D MAX = 3° 30′

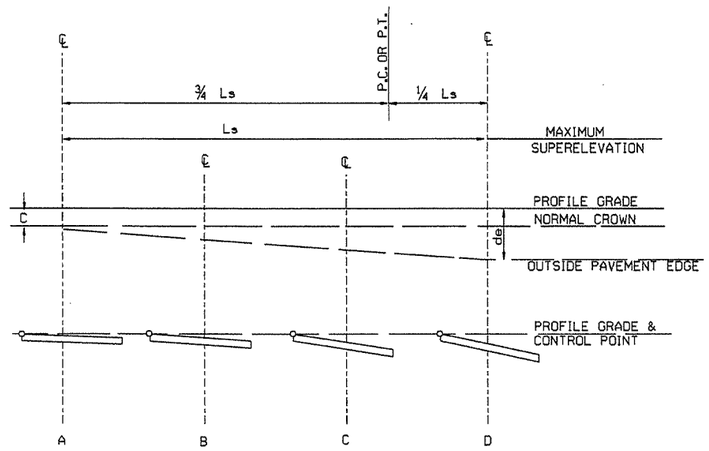

ONE-WAY TRAFFIC
INSIDE LANE

SUPERELEVATION FORMULA = $S = -\frac{L(de-C)}{Ls} - C$

ABBREVIATIONS

NC - NORMAL CROWN
RC - REVERSE CROWN, SUPERELEVATION AT NORMAL CROWN SLOPE
S - SUPERELEVATION
L - DISTANCE FROM BEGINNING OF SUPERELEVATION TRANSITION TO ANY POINT (FT.)
d - WIDTH OF PAVEMENT
e - MAXIMUM RATE OF SUPERELEVATION (FT. PER FT.)
Ls - LENGTH OF SUPERELEVATION TRANSITION (FT.)
C - NORMAL CROWN (FT.)

GENERAL NOTES

1. ON PAVEMENT WITH ONE-WAY TRAFFIC, THE SUPERELEVATION SHALL BE REVOLVED ON THE PROFILE GRADE POINT.
2. SUPERELEVATION VALUES SHOWN ON THE CROSS SECTIONS ARE VALUES (+) OR (-) TO BE ADDED OR SUBTRACTED FROM THE POINT OF CONTROL.
3. LENGTHS FOR Ls MAY BE ROUNDED IN MULTIPLES OF 25 FT. OR 50 FT. TO PERMIT SIMPLER CALCULATIONS.
4. MINIMUM Ls VALUES MAY BE USED FOR RAMPS; DESIRABLE VALUES SHALL APPLY TO MAIN LANES.
5. DIVIDED PAVEMENTS WIDER THAN 4 LANES SHALL HAVE ADDITIONAL TRANSITION LENGTHS AS FOLOWS:

6 LANE DIVIDED---------+20%
8 LANE DIVIDED---------+50%

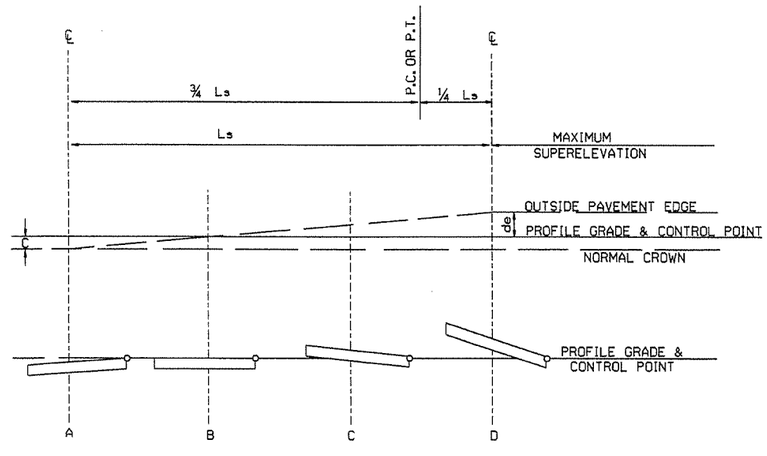

ONE-WAY TRAFFIC
OUTSIDE LANE

SUPERELEVATION FORMULA = $S = +\frac{L(de+C)}{Ls} - C$

DATE	REVISION	DATE FILMED
01-09-87	ISSUED	578-1-15-87

ARKANSAS STATE HIGHWAY COMMISSION

TABLES AND METHOD OF SUPERELEVATION FOR ONE-WAY TRAFFIC

STANDARD DRAWING SE-1

SUPERELEVATION TABLE FOR TWO - WAY TRAFFIC

DEGREE OF CURVE	30 MPH e	30 MPH Ls (FT) MINIMUM	30 MPH Ls (FT) DESIRABLE	40 MPH e	40 MPH Ls (FT) MINIMUM	40 MPH Ls (FT) DESIRABLE	50 MPH e	50 MPH Ls (FT) MINIMUM	50 MPH Ls (FT) DESIRABLE	55 MPH e	55 MPH Ls (FT) MINIMUM	55 MPH Ls (FT) DESIRABLE	60 MPH e	60 MPH Ls (FT) MINIMUM	60 MPH Ls (FT) DESIRABLE	70 MPH e	70 MPH Ls (FT) MINIMUM	70 MPH Ls (FT) DESIRABLE
0° 15′	N. C.			N. C.			N. C.			N. C.			N. C.			N. C.		
0° 30′	N. C.			N. C.			N. C.			N. C.			N. C.			N. C.		
0° 45′	N. C.			N. C.			R. C.			0.022			0.023			0.028		
1° 00′	N. C.			N. C.			0.021			0.026			0.030			0.037	275	300
1° 15′	N. C.			R. C.			0.026			0.032			0.037			0.046		
1° 30′	N. C.			0.021			0.031	200		0.037	225		0.043	250		0.054		
1° 45′	N. C.			0.025	175		0.036			0.043		300	0.049		300	0.062		
2° 00′	R. C.			0.028			0.040			0.048			0.055			0.070		
2° 15′	R. C.			0.031			0.045		250	0.053			0.061			0.078	300	350
2° 30′	0.021			0.034			0.049			0.056			0.067			0.085	315	
2° 45′	0.023			0.037		200	0.053			0.063			0.072			0.091	335	
3° 00′	0.025			0.040			0.057			0.067	230		0.077	260		0.096	350	400
3° 15′	0.027	150		0.043			0.061			0.072	245		0.082	275		0.098	380	
3° 30′	0.029			0.046			0.065	205		0.076	255		0.086	285		0.100	360	
3° 45′	0.031			0.049			0.069	215		0.080	265		0.090	295				
4° 00′	0.033			0.051			0.072	225		0.083	270		0.093	305	350			
4° 30′	0.037			0.056			0.078	240		0.087	280		0.096	315				
5° 00′	0.040			0.061			0.083	250		0.091	295		0.098	320				
5° 30′	0.043			0.066	185		0.088	260		0.094	300	350						
6° 00′	0.046			0.070	190		0.092	270		0.096	305							
6° 30′	0.050			0.074	200		0.095	280	300	0.100	315							
7° 00′	0.053			0.078	210		0.098	285										
7° 30′	0.056			0.081	215		0.099	290										
8° 00′	0.058			0.084	220	250	0.100	290										
8° 30′	0.061			0.087	225													
9° 00′	0.063			0.089	230													
10° 00′	0.068	160		0.094	235													
11° 00′	0.072	170		0.097	250													
12° 00′	0.076	175		0.099	250													
13° 00′	0.080	180		0.100	250													
14° 00′	0.083	190																
15° 00′	0.086	195																
16° 00′	0.089	200																
17° 00′	0.091	200																
18° 00′	0.093	205																
19° 00′	0.095	210																
20° 00′	0.097	215	250															
21° 00′	0.098	215																
22° 00′	0.099	215																
23° 00′	0.099	215																
24° 00′	0.100	220																

D MAX = 24° 45′ | D MAX = 13° 15′ | D MAX = 8° 15′ | D MAX = 6° 30′ | D MAX = 5° 15′ | D MAX = 3° 30′

ABBREVIATIONS

NC - NORMAL CROWN
RC - REVERSE CROWN, SUPERELEVATION AT NORMAL CROWN SLOPE
e - RATE OF SUPERELEVATION (FT. PER FT.)
Ls - LENGTH OF SUPERELEVATION TRANSITION (FT.)
L - DISTANCE FROM BEGINNING OF SUPERELEVATION TRANSITION TO ANY POINT (FT.)
d - WIDTH OF PAVEMENT (FT.) OR WIDTH OF SUBGRADE (FT.)
C - NORMAL CROWN (FT.)

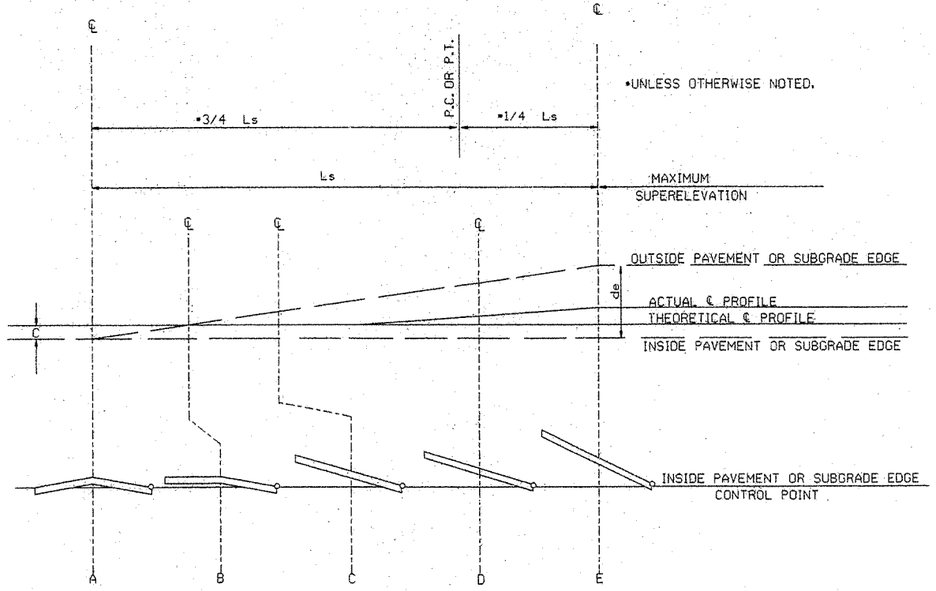

STANDARD METHOD WHEN SUPERELEVATION REVOLVES AROUND INNER SUBGRADE POINT OR INNER PAVEMENT EDGE

NOTE: MAINTAIN NORMAL CROWN ON INSIDE UNTIL SUPERELEVATION EXCEEDS 2C.

GENERAL NOTES

1. ON PAVEMENT WITH TWO-WAY TRAFFIC, THE SUPERELEVATION SHALL BE REVOLVED ON THE INSIDE PAVEMENT EDGE UNLESS OTHERWISE NOTED ON THE PLANS
2. SUPERELEVATION VALUES SHOWN ON THE CROSS SECTIONS ARE VALUES (+) OR (-) TO BE ADDED TO OR SUBTRACTED FROM THE POINT OF CONTROL.
3. LENGTHS FOR L MAY BE ROUNDED IN MULTIPLES OF 25 FT. OR 50 FT. TO PERMIT SIMPLER CALCULATIONS.
4. PAVEMENTS WIDER THAN 2 LANES SHALL HAVE ADDITIONAL TRANSITION LENGTHS AS FOLLOWS:

3 LANE UNDIVIDED - - - - - +20%
4 LANE UNDIVIDED - - - - - +50%
5 LANE UNDIVIDED - - - - - +80%
6 LANE UNDIVIDED - - - - - +100%

NOTE: MAINTAIN NORMAL CROWN ON INSIDE UNTIL SUPERELEVATION EXCEEDS 2C.

RATE OF SUPERELEVATION SHALL BE COMPUTED ON STRAIGHT LINE METHOD USING APPLICABLE Ls.

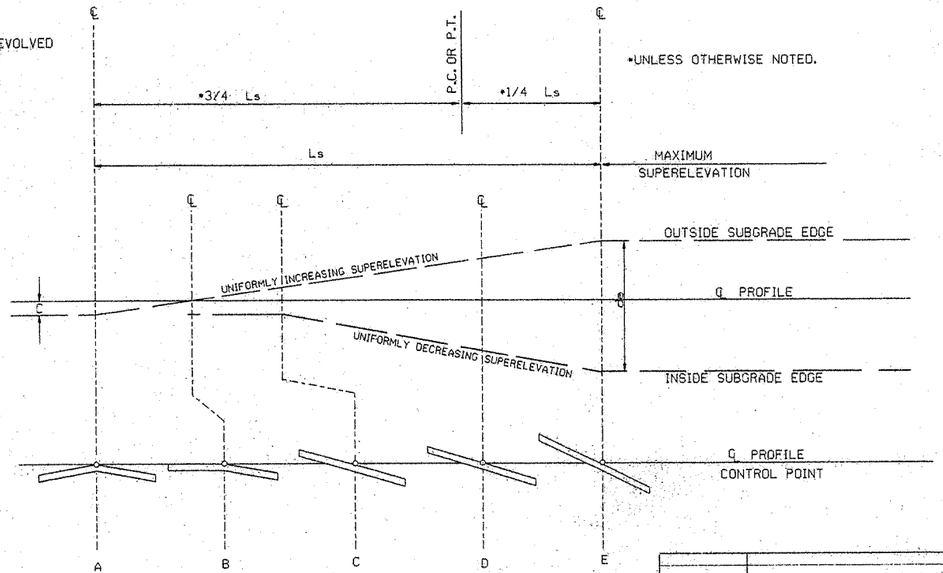

STANDARD METHOD WHEN SUPERELEVATION REVOLVES AROUND CENTER LINE

SUPERELEVATION FORMULA = $\frac{Lde}{Ls}$

DATE	REVISION	DATE FILMED
10-18-96	ADDED FORMULA	10-18-96
01-09-87	ISSUED	534-1-9-87

ARKANSAS STATE HIGHWAY COMMISSION

TABLES AND METHOD OF SUPERELEVATION FOR TWO-WAY TRAFFIC

STANDARD DRAWING SE-2

FILE STDSE2.DGN



R1-1
30"X30"



W1-3
30"X30"
(LT. OR RT.)

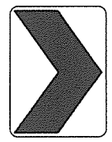

W1-8
18"X24"



W2-5
30"X30"



W3-1
36"X36"



W5-1
36"X36"

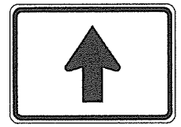

M6-3
21"X15"



R1-2
36"X36"X36"



W1-4
30"X30"
(LT. or RT.)



W2-1
30"X30"



S1-1
36"X36"



W3-2
36"X36"



County
Route Marker
M1-6
24"X24"

NOTE: REFLECTORIZED YELLOW LEGEND (COUNTY NAME, ROUTE LETTER & NUMBER) & BORDER ON A BLUE BACKGROUND.

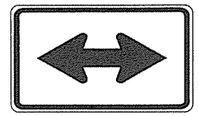

M6-4
21"X15"

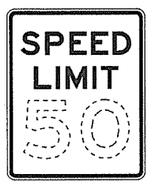

R2-1
24"X30"



W1-5
30"X30"
(LT. or RT.)

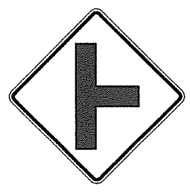

W2-2
30"X30"



W5-2
36"X36"



W8-3
36"X36"



R1-3P
18"X6"

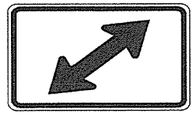

M6-5
21"X15"



W1-1
30"X30"
(LT. or RT.)

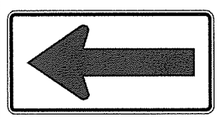

W1-6
48"X24"

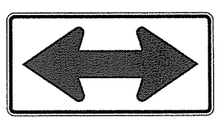

W1-7
48"X24"

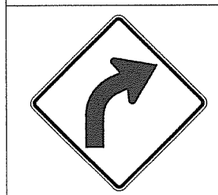

W1-2
30"X30"
(LT. or RT.)

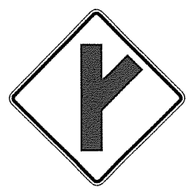

W2-3
30"X30"
(LT. or RT.)

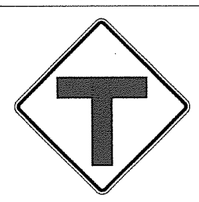

W2-4
30"X30"



W5-3
36"X36"

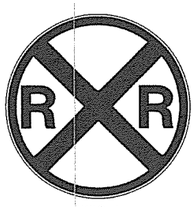

W10-1
36" DIAMETER

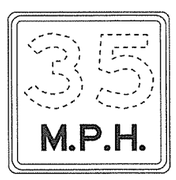

W13-1P
18"X18"

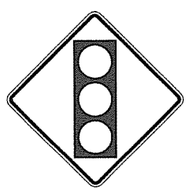

W3-3
36"X36"

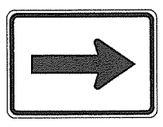

M6-1
21"X15"

NOTE: ALL M6 SIGNS TO BE MADE WITH REFLECTORIZED YELLOW ARROW & BORDER WITH BLUE BACKGROUND.

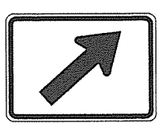

M6-2
21"X15"

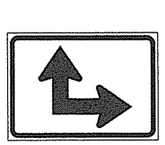

M6-6
21"X15"



S4-3P
24"X8"

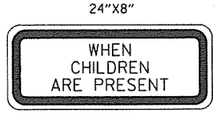

S4-2P
24"X10"

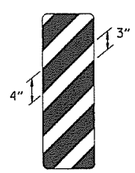

OM-3
12"X36"
(LT. or RT.)

MINIMUM DIMENSIONS SHOWN

SUPPORT SECTION

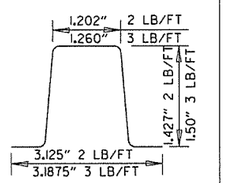

(U-CHANNEL)
STANDARD SUPPORT
ASSEMBLIES

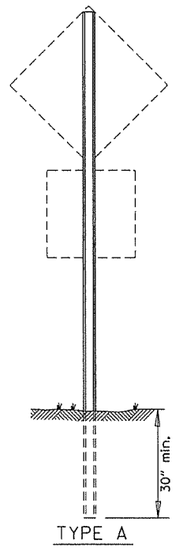

TYPE A

NOTE: LENGTH OF SIGN POSTS SHALL BE DETERMINED SO AS TO PROVIDE FOR MINIMUM VERTICAL CLEARANCES AS CALLED FOR IN THE SPECIFICATIONS PLUS A MINIMUM VERTICAL PENETRATION OF 30" IN THE SOIL.

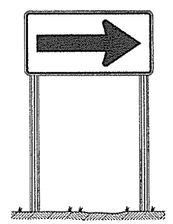

TYPE B

TYPE C

MINIMUM WEIGHT

TYPE A & B = 3 LBS./FT.
TYPE C = 2 LBS./FT.

STANDARD HIGHWAY SIGNS

SUPPORT ASSEMBLIES

DATE	REVISION	DATE FILMED
9-12-13	DELETED JOB NO. BLOCK; REVISED RI-3 TO RI-3P	
4-17-08	REVISED SIGN DESIGNATION - W3-1& W3-2	
4-10-03	REVISED W5-2, W8-3, OM-3; ADDED WI-8	
1-5-81	REDRAWN	960-1-15-81
9-15-78	ADDED W14-3	877-9-15-78
9-2-76	POST WT.	623-9-3-76
5-3-76	STEEL POST WT. FROM 2#-3#; ADDED S4-2 & S4-3	504-5-3-76
8-12-74	REV. HT. TYPE "C" ASSEMBLY	500-8-21-74
12-21-72	ADDED M6-2,3,4,5,6	500-12-21-72
12-1-72	ISSUED	562-12-1-72

ARKANSAS STATE HIGHWAY COMMISSION

STANDARD HIGHWAY SIGNS
AND SUPPORT ASSEMBLIES

STANDARD DRAWING SHS-1

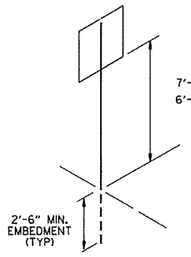

U-1

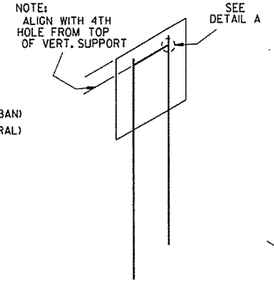

U-2

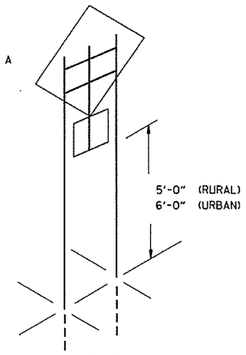

U-2 (A)

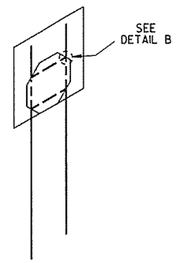

U-2 (B)

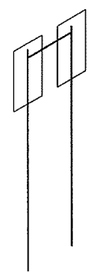

U-2 (1)

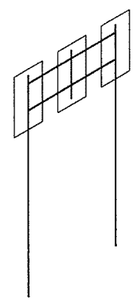

U-2 (2)

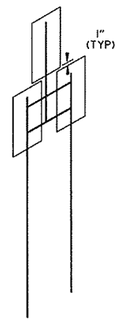

U-2 (3)

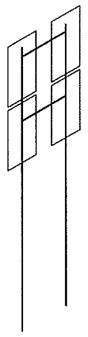

U-2 (4)

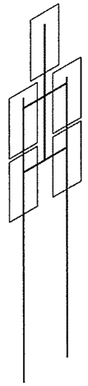

U-2 (5)

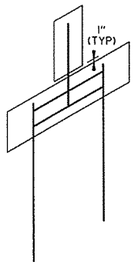

U-2 (6)

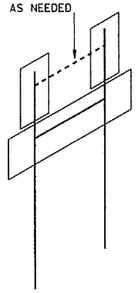

U-2 (7)

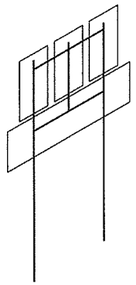

U-2 (8)

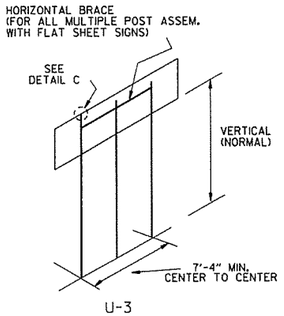

U-3

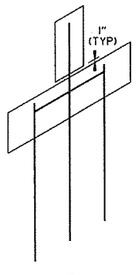

U-3 (1)

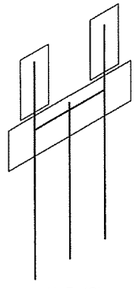

U-3 (2)

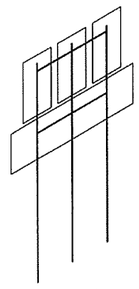

U-3 (3)

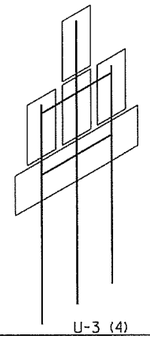

U-3 (4)

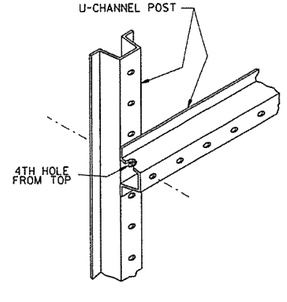

DETAIL A

SHOWING HORIZONTAL BRACE

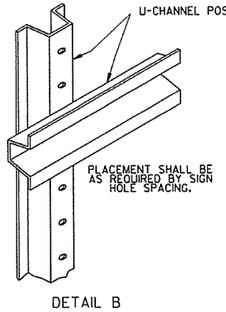

DETAIL B

SHOWING BACK-TO-BACK INSTALLATION

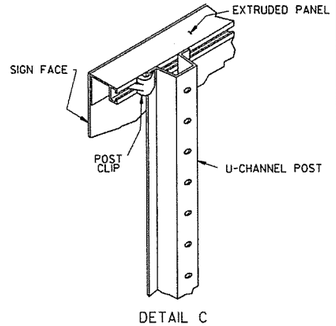

DETAIL C

SHOWING GUIDE SIGN MOUNTING WITH EXTRUDED PANELS

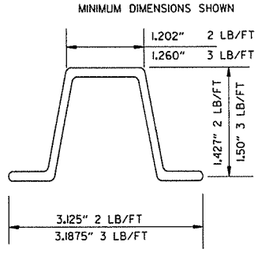

DETAIL C

U-CHANNEL POST

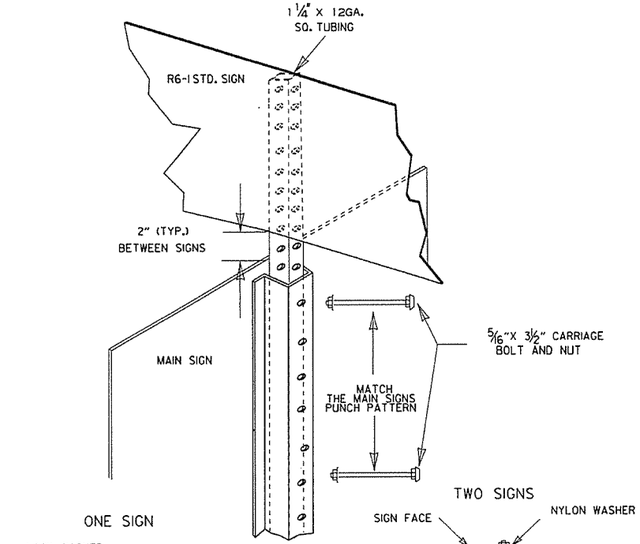

DETAIL E

R6-1 EXTENSION FOR U-CHANNEL POST

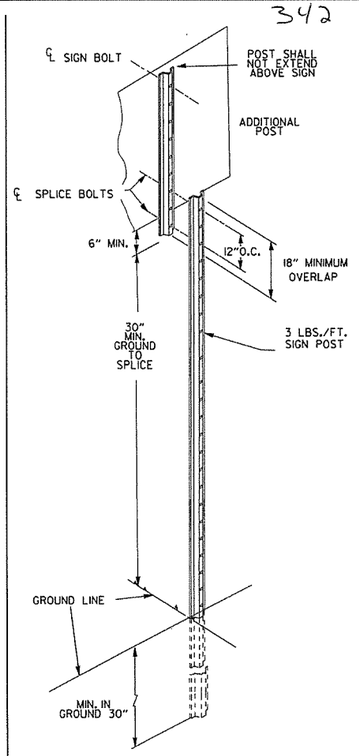

DETAIL F

DETAIL OF SPLICES

NOTES:

SIGNS AT LEAST 8' IN LENGTH MAY BE INSTALLED ON THREE 3 LB. POST. IN NO CASE SHALL THERE BE MORE THAN TWO 3 LB. POSTS WITHIN A 7' PATH.

SPLICES NECESSARY TO ATTAIN PROPER MOUNTING HEIGHT SHALL BE AS SHOWN IN DETAIL (F).

NORMAL INSTALLATIONS WILL REQUIRE $\frac{5}{16}$" DIA. CARRIAGE BOLTS TO MOUNT SIGNS TO POST AND TO ASSEMBLE THE VARIOUS POST SUPPORTS.

ALL SIGN POSTS SHALL BE PLUMB.

THE POST FOR "TYPE U" SUPPORTS SHALL BE HOT DIP GALVANIZED.

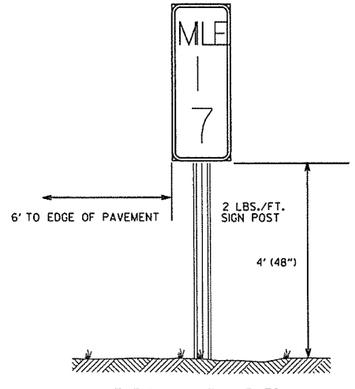

TYPICAL MILE MARKER INSTALLATION

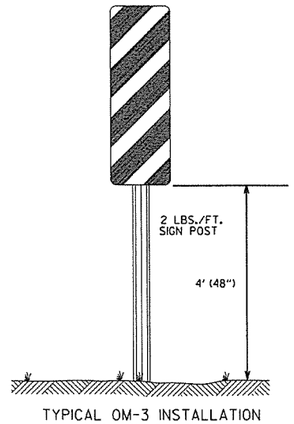

TYPICAL OM-3 INSTALLATION AT EDGE OF OBSTRUCTION

DATE	REVISION	FILMED
9-12-13	REVISED U-2(3), U-2(6), U-3(1), DETAIL D; ADDED DETAILS E & F; ADDED TYPICAL MARKERS	
10-9-03	REMOVED ROUND POST & REVISED SPACING	
10-12-95	MOVED UPPER SPLICE	
6-8-95	REVISED SPLICE DETAIL	6-8-95
2-2-95	REDRAWN	2-2-95

ARKANSAS STATE HIGHWAY COMMISSION

U-CHANNEL POST ASSEMBLIES

STANDARD DRAWING SHS-2

POST SIZE	BASE CONNECTION DATA											FUSE PLATE DATA									WT. OF EACH FUSE PLATE LBS.
	BOLT SIZE	BOLT TORQUE (INCH/LBS)	A	B	C	D	E	t_1	t_2	W	R	F	G	J	K	M	d_1	d_2	t_3	BOLT SIZE	
W 6X9												4¼"	2"	4"	2¼"	1"	9/16"	¾"	¼"	½" x 1½"	1.01
W 6X12	⅝" x 2¾"	450"-680"	5"	2"	1¼"	2¾"	1⅛"	¾"	½"	¼"	11/32"										
W 6X15												5"	2½"	6"	3½"	1½"	11/16"	1¼"	⅜"	⅝" x 2¼"	2.51
W 8X18												5"	2½"	5¼"	2¾"	1¼"	13/16"	1⅛"	⅜"	¾" x 2¼"	2.26
W 8X21												5½"	2½"	5¼"	2¾"	1¼"	13/16"	1"	½"	¾" x 2¼"	3.35
W 10X22	¾" x 3½"	750"-1050"	6"	2¼"	1⅜"	3½"	1¼"	1"	¾"	5/16"	11/32"	6"	3"	5¾"	2¾"	1⅜"	13/16"	1⅛"	½"	¾" x 2¼"	4.03
W 10X26																					
W 12X26												6"	3"	6½"	3½"	1⅝"	13/16"	1⅝"	½"	¾" x 2¼"	4.47

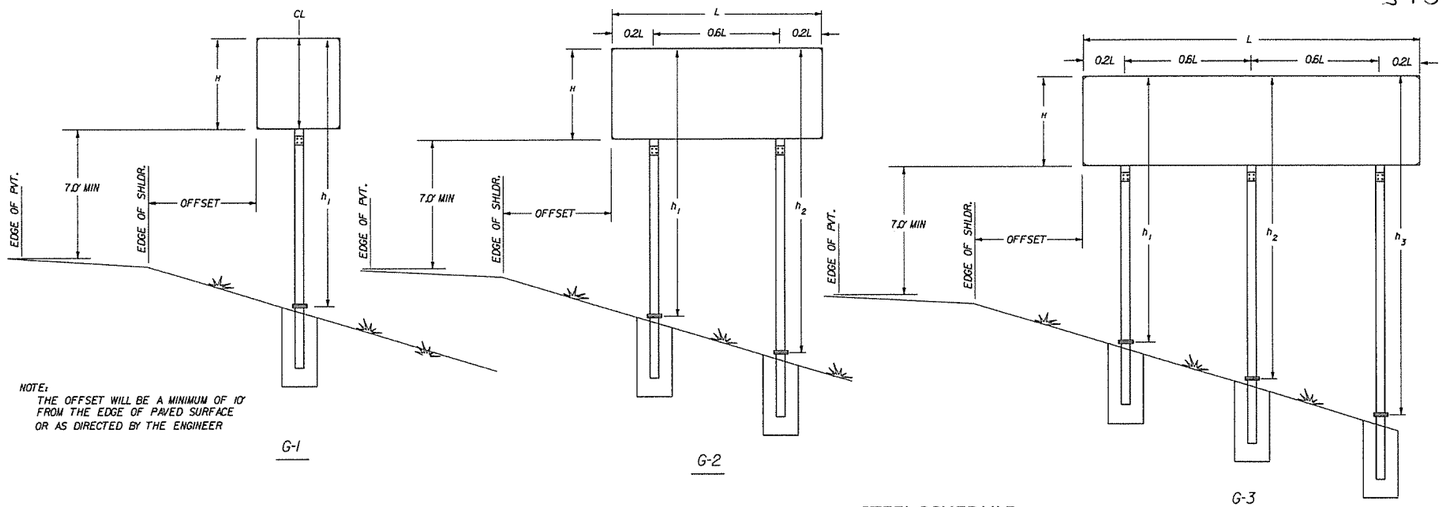

NOTE:
THE OFFSET WILL BE A MINIMUM OF 10' FROM THE EDGE OF PAVED SURFACE OR AS DIRECTED BY THE ENGINEER

G-1 G-2 G-3

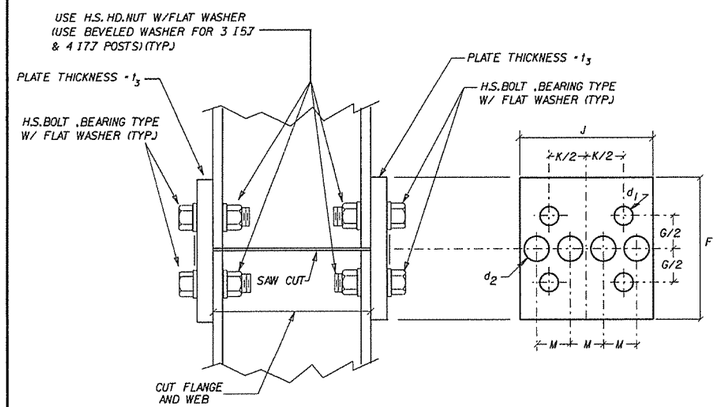

NOTE: USE H.S.HEX HEAD BOLTS,HEX HEAD NUTS AND BEVEL OR FLAT WASHERS (WHERE REQ.) UNDER NUTS. ALL HOLES SHALL BE DRILLED. ALL PLATE CUTS SHALL PREFERABLY BE SAW CUTS. HOWEVER FLAME CUTTING WILL BE PERMITTED PROVIDED ALL EDGES ARE GROUND. METAL PROJECTING BEYOND THE PLANE OF THE PLATE FACE WILL NOT BE PERMITTED. STEEL FUSE PLATES SHALL CONFORM TO THE REQUIREMENTS OF ASTM-A36, ASTM-A441, ASTM-572 GRADE 50, OR ASTM-A588 MAY BE SUBSTITUTED FOR A36 AT THE OPTION OF THE FABRICATOR. STEEL USED SHALL HAVE AN ULTIMATE TENSILE STRENGTH NOT TO EXCEED 80 KSI.

NOTE: SECTIONS SHOWN ARE FOR INSTALLATION ON THE RIGHT SHOULDER AND IN THE GORE. BOLT HOLES IN BASE PLATE ARE SLOTTED AND BEVELED AS SHOWN. USE H.S.BOLTS WITH HEX HD.,HEX NUT AND THREE FLAT WASHERS FOR EACH BOLT. SEE TABLE FOR BOLT DIA. AND TORQUE.
NOTE: ASSEMBLE SIGN POST TO STUB POST USING THE BOLTS SPEC. IN THE TABLE AND AS SHOWN IN THE ELEVATION DETAILS. THERE SHALL BE THREE FLAT WASHERS ON EACH BOLT LOCATED AS SHOWN IN THE ELEVATIONS. USE A SHIM TO PLUMB THE SIGN POST, THEN TIGHTEN THE BOLTS USING A 12" TO 15" WRENCH UNTIL THE WASHERS AND SHIMS ARE SEATED AND THE BOLT THREADS ARE CLEAR, THEN LOOSEN EACH BOLT IN TURN AND RETIGHTEN IN A SYSTEMATIC ORDER TO THE PRESCRIBED TORQUE (SEE TABLE). THE BURR THREADS ADJACENT TO THE BACK SIDE OF THE NUT TO PREVENT LOOSENING.

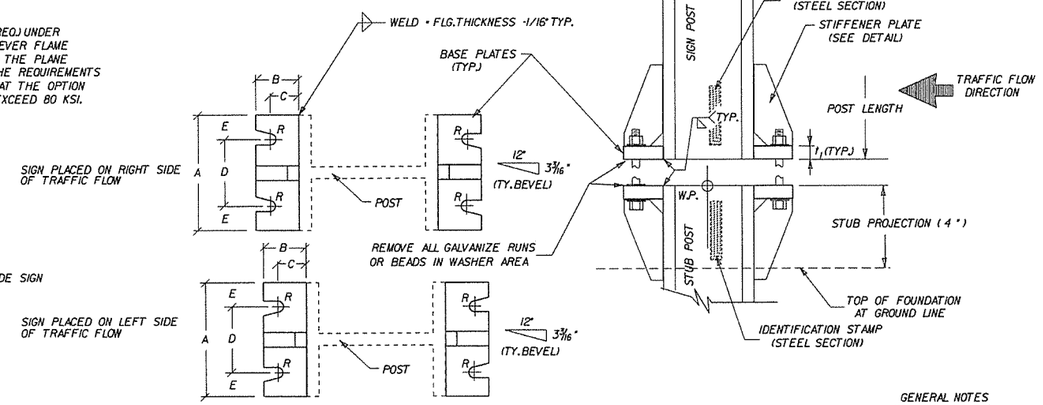

NOTE: BOLT HOLES, USED IN THE MOUNTING OF STANDARD SIGNS SHALL BE LOCATED IN THE FLANGE ADJACENT TO THE NEAR EDGE OF PAVEMENT FOR SINGLE POST ASSEMBLIES AND IN THE OUTSIDE FLANGES FOR MULTIPLE POST ASSEMBLIES.

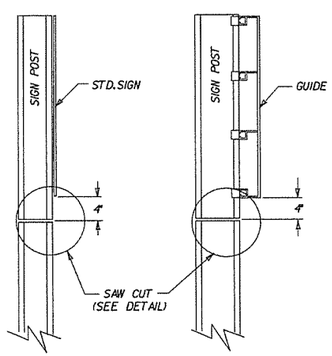

NOTE: POST SHALL BE SAW CUT AFTER GALVANIZING AND THE CUT SURFACE TREATED, AFTER PLATE IS INSTALLED AND ALL BOLTS FULLY TIGHTENED, WITH AN APPROVED ZINC SOLDER MEETING THE FEDERAL SPEC. O-G-93 (STICK ONLY).

STANDARD SIGNS GUIDE SIGNS

FUSE PLATE DETAILS

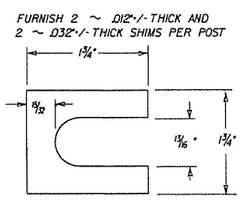

SHIM DETAIL

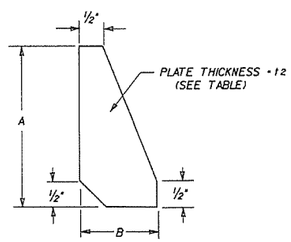

STIFFENER PLATE DETAIL

STEEL SCHEDULE

FOOTING DIAMETER	#3 TIE BARS		
	DIAMETER	BAR LENGTH	POUNDS
INCHES	INCHES	FEET	
18	12	4.39	1.65
24	18	5.96	2.24
30	24	7.53	2.83
36	30	9.1	3.42

FOOTINIG DEPTH	#6 STRAIGHT BARS		
	BAR LENGTH	NUMBER REQ'D.	POUNDS
FEET	FEET		
2.50	2.00	8	24.03
3.00	2.50	8	30.04
3.50	3.00	8	36.05
4.00	3.50	8	42.06
4.50	4.00	8	48.06
5.00	4.50	8	54.07
5.50	5.00	8	60.08
6.00	5.50	8	66.09
6.50	6.00	8	72.10
7.00	6.50	8	78.10
7.50	7.00	8	84.11
8.00	7.50	8	90.12

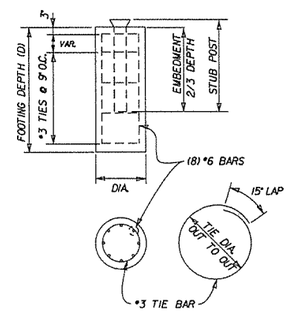

FOOTING QUANTITIES

FOOTINIG DEPTH	NUMBER TIE BARS REQ'D	18" DIAMETER		24" DIAMETER		30" DIAMETER		36" DIAMETER	
		CLASS S CONCRETE	REINF STEEL	CLASS S CONCRETE	REINF STEEL	CLASS S CONCRETE	REINF STEEL	CLASS S CONCRETE	REINF STEEL
FEET		CU. YD.	(GRADE 60)	CU. YD.	(GRADE 60)	CU. YD.	(GRADE 60)	CU. YD.	(GRADE 60)
2.50	4	0.16	31						
3.00	4	0.20	37						
3.50	5	0.23	44						
4.00	6	0.26	52	0.47	56				
4.50	6	0.29	58	0.52	62				
5.00	7	0.33	66	0.58	70	0.91	74		
5.50	8			0.64	78	1.00	83		
6.00	8			0.70	84	1.09	89	1.57	93
6.50	9					1.18	98	1.70	103
7.00	10					1.27	106	1.83	112
7.50	10							1.96	118
8.00	11							2.09	128

GENERAL NOTES

TIGHTEN THE HIGH STRENGTH BOLTS IN THE BASE CONNECTION ONLY TO THE TORQUE SHOWN. DO NOT OVERTIGHTEN.

BASE PLATES AND STIFFENER PLATES SHALL BE OF THE SAME MATERIAL AS THE PRIMARY SUPPORT POSTS WHICH THEY ARE WELDED.

REFER TO THE PLANS FOR FOOTING DIMENSIONS.

EACH STUB POST AND SIGN POST SHALL HAVE A PERMANENT IDENTIFYING STAMP WHICH SPECIFIES THE STEEL SECTION USED. IF THE CONTRACTOR ELECTS TO SHIP THE STUB POST SEPARATE FROM THE SIGN POST A MATCH MARK SYSTEM WILL BE REQUIRED.

SIGN POST AND STUB POST

DATE	REVISION	FILMED
9-12-13	ISSUED	

ARKANSAS STATE HIGHWAY COMMISSION

DETAIL OF BREAKAWAY SIGN SUPPORTS FOR GUIDE SIGNS

STANDARD DRAWING SHS-3

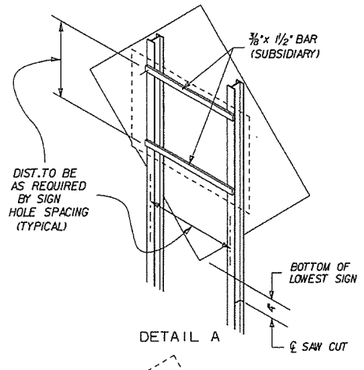

DETAIL A

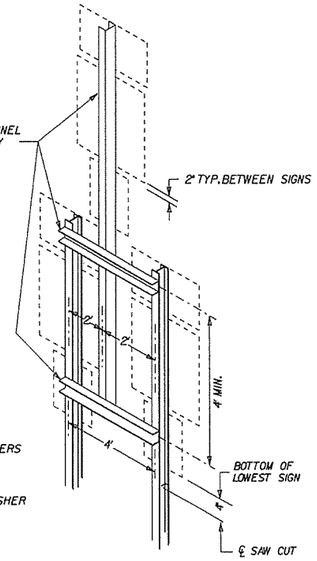

DETAIL D

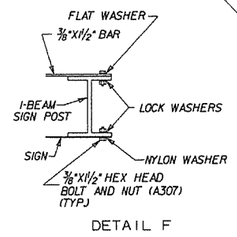

DETAIL F

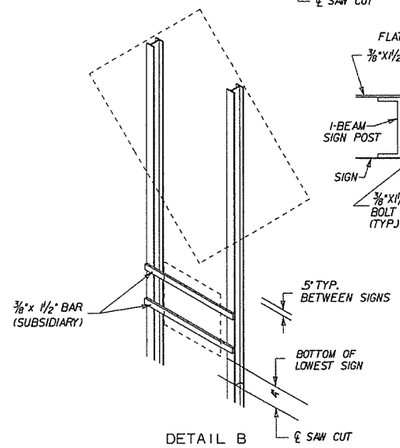

DETAIL B

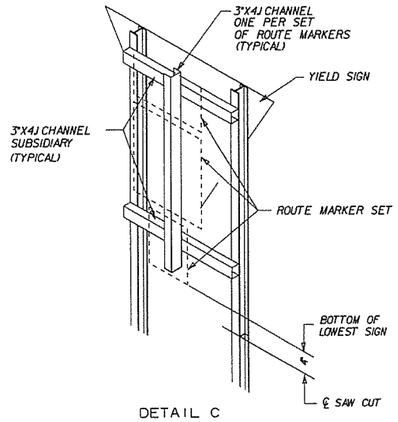

DETAIL C

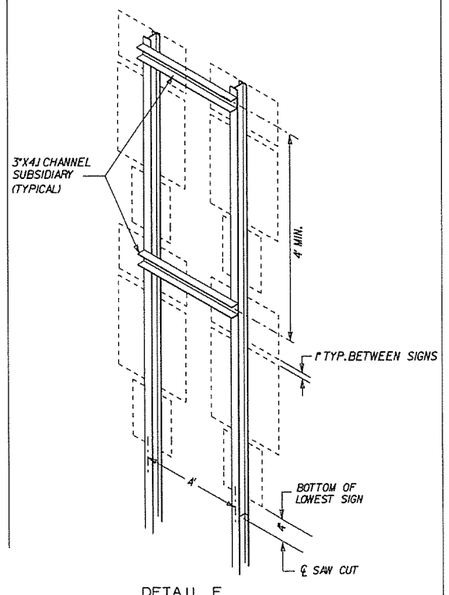

DETAIL E

NOTE

ALL ADDITIONAL MOUNTING HARDWARE, BOLTS, NUTS, CHANNELS AND BAR STRAPS REQUIRED TO MOUNT SECONDARY SIGNS WILL BE CONSIDERED TO BE SUPPLEMENTAL TO THE MAIN SIGN SUPPORT SPECIFIED. PAYMENT WILL BE CONSIDERED SUBSIDIARY TO THE MAIN SUPPORT.

THE GALVANIZED STEEL CHANNEL AND BAR SUPPORTS MAY BE AST M A-36.

REFER TO THE P.C. RUTLEDGE FORMULA ON PAGE 58 OF THE AASHTO PUBLICATION "STANDARD SPECIFICATIONS FOR STRUCTURAL SUPPORTS FOR HIGHWAY SIGNS, LUMINAIRES, AND TRAFFIC SIGNALS.

ALL BOLT HOLES SHALL BE 1/8" DIA. UNLESS OTHERWISE SHOWN.

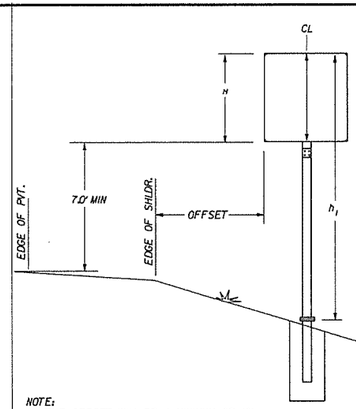

G-1

NOTE:
THE OFFSET WILL BE A MINIMUM OF 10' FROM THE EDGE OF PAVED SURFACE OR AS DIRECTED BY THE ENGINEER.

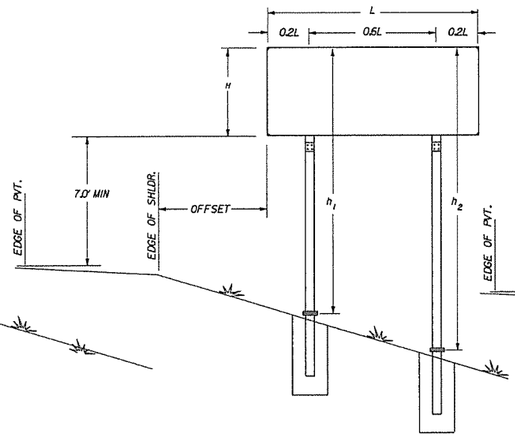

G-2

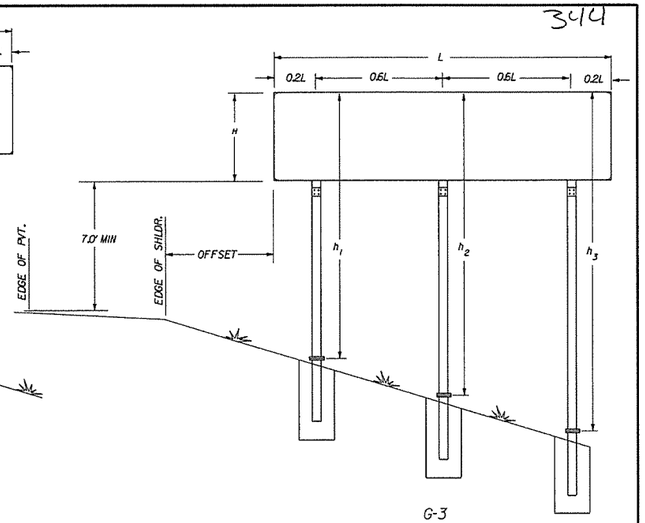

G-3

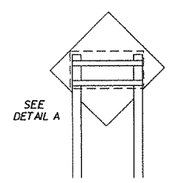

G2-1

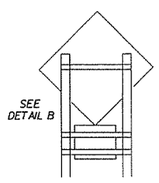

G2-2

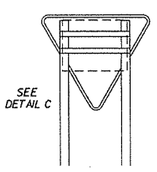

G2-3

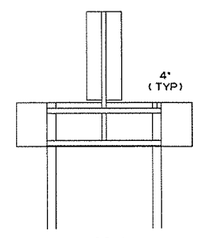

G2-4

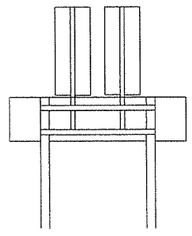

G2-5

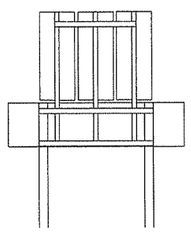

G2-6

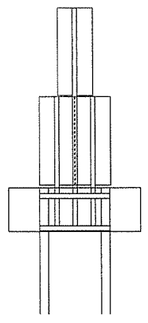

G2-7

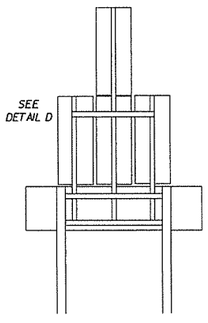

G2-8

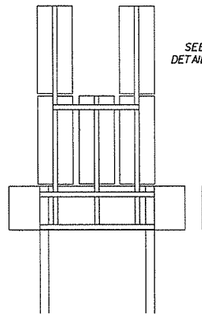

G2-9

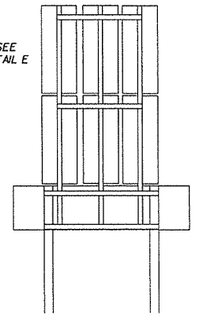

G2-10

			ARKANSAS STATE HIGHWAY COMMISSION
			DETAIL OF BREAKAWAY SIGN SUPPORTS FOR STANDARD SIGNS
9-12-13	ISSUED		STANDARD DRAWING SHS-4
DATE	REVISION	FILMED	



TYPICAL DETAIL

TYPE A

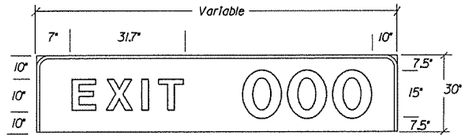

EXIT WITH 1 DIGIT 84"X30"=17.50 SF
EXIT WITH 2 DIGITS 96"X30"=20.0 SF
EXIT WITH 3 DIGITS 114"X30"=23.57 SF

TYPE B

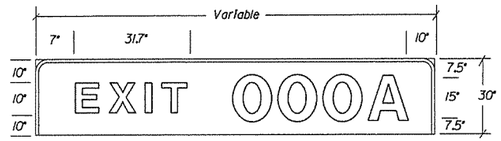

EXIT WITH 1 DIGIT PLUS "A"OR"B" 96"X30"=20.0 SF
EXIT WITH 2 DIGITS PLUS "A"OR"B" 114"X30"=23.57 SF
EXIT WITH 3 DIGITS PLUS "A"OR"B" 126"X30"=26.25 SF

TYPE C

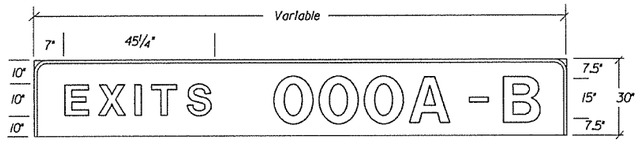

EXITS WITH 1 DIGIT PLUS "A"&"B" 132"X30"=27.50 SF
EXITS WITH 2 DIGITS PLUS "A"&"B" 150"X30"=31.25 SF
EXITS WITH 3 DIGITS PLUS "A"&"B" 168"X30"=35.00 SF

TYPE D

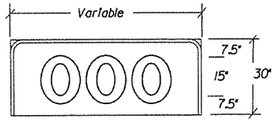

1 DIGIT 24"X30"=5.0 SF
2 DIGITS 42"X30"=8.75 SF
3 DIGITS 60"X30"=12.50 SF

TYPE E

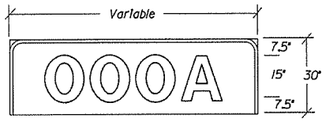

1 DIGIT PLUS "A"OR"B" 42"X30"=8.75 SF
2 DIGITS PLUS "A"OR"B" 60"X30"=12.50 SF
3 DIGITS PLUS "A"OR"B" 78"X30"=16.25 SF

EXIT PANEL DETAILS

NOTE: EXIT NUMBER PANELS SHALL HAVE WHITE LEGENDS AND BORDERS. THE BACK GROUND COLOR WILL BE AS USE SPECIFIES. SHEETING TYPE WILL BE THE SAME AS THE GUIDE SIGN WHICH THE EXIT PANEL IS ATTACHED OR AS SPECIFIED IN THE PLANS. PAYMENT FOR ALL POST CLIPS, BOLTS, AND ANGLES SHALL BE SUBSIDIARY TO THE ITEM "EXIT NUMBER PANEL".

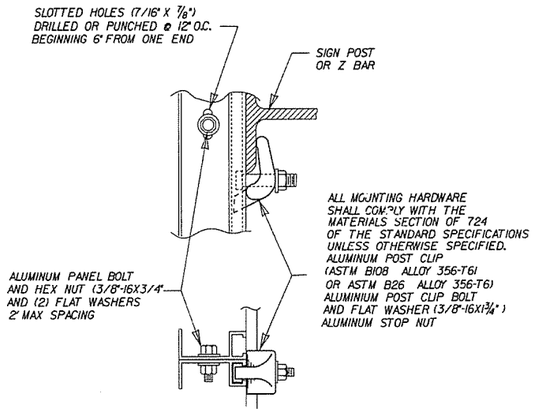

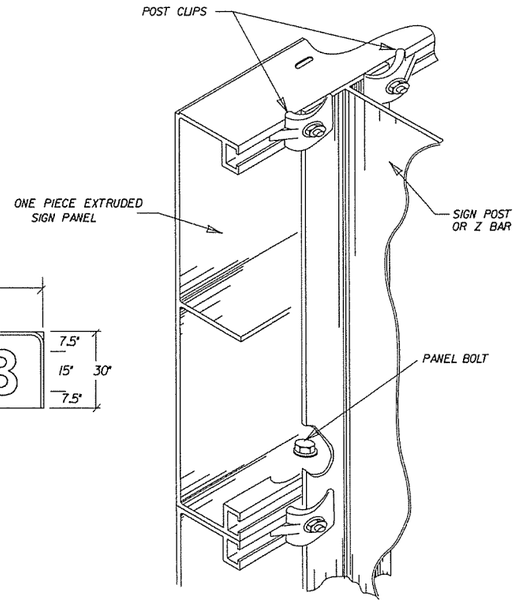

MOUNTING HARDWARE

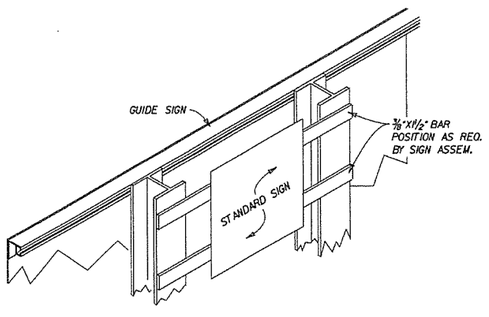

SECONDARY SIGN INSTALLATION ON BACKSIDE OF GUIDE SIGN

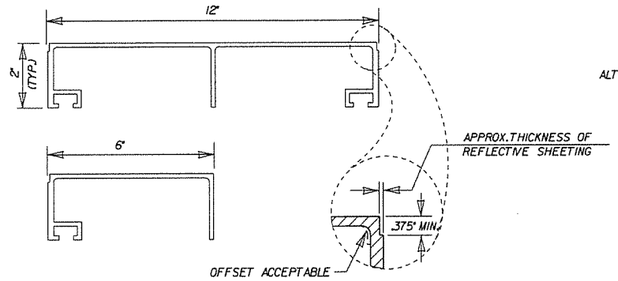

ONE PIECE EXTRUDED SIGN PANELS

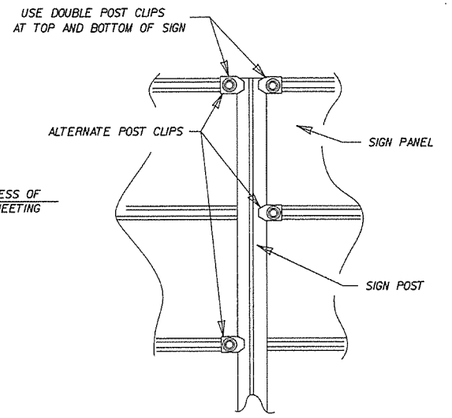

POST CLIP PLACEMENT

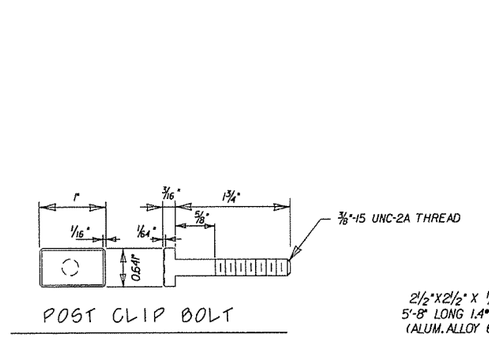

POST CLIP BOLT

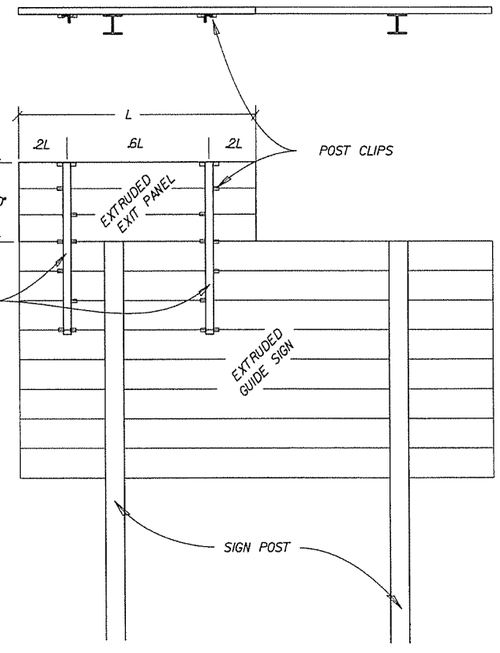

			ARKANSAS STATE HIGHWAY COMMISSION
			DETAILS OF GUIDE SIGN PANELS
9-12-13	ISSUED		STANDARD DRAWING SHS-5
DATE	REVISION	FILMED	

THE CONTRACTOR SHALL DRILL AND POP-RIVET LEGEND, SHIELDS, ARROWS, OR OTHER COPY AS SHOWN.

MOUNTING DETAILS FOR DEMOUNTABLE LEGEND ON GUIDE SIGNS

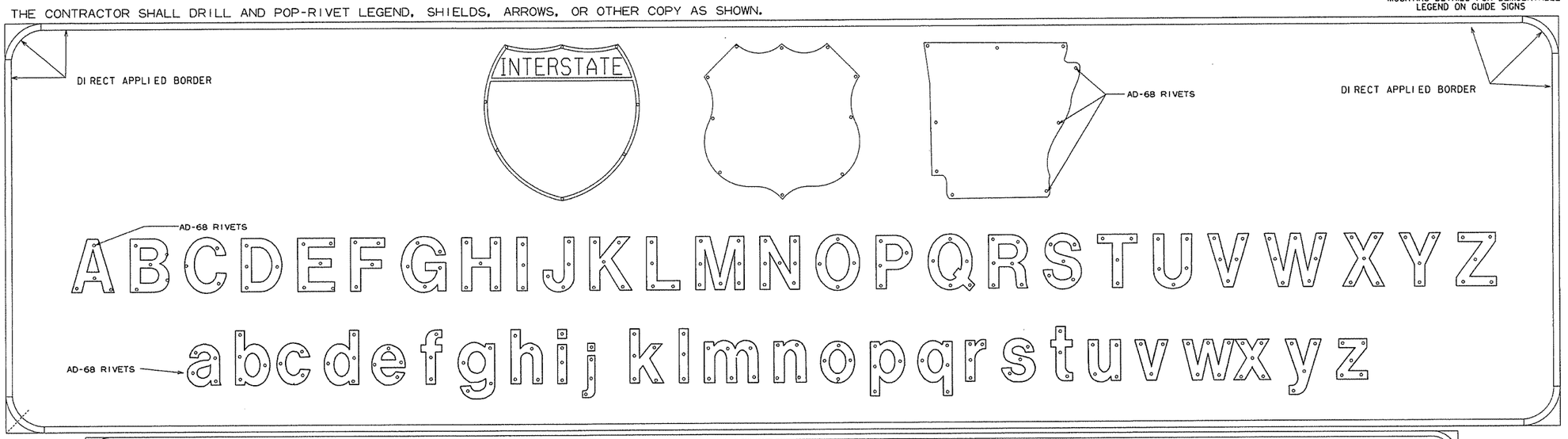

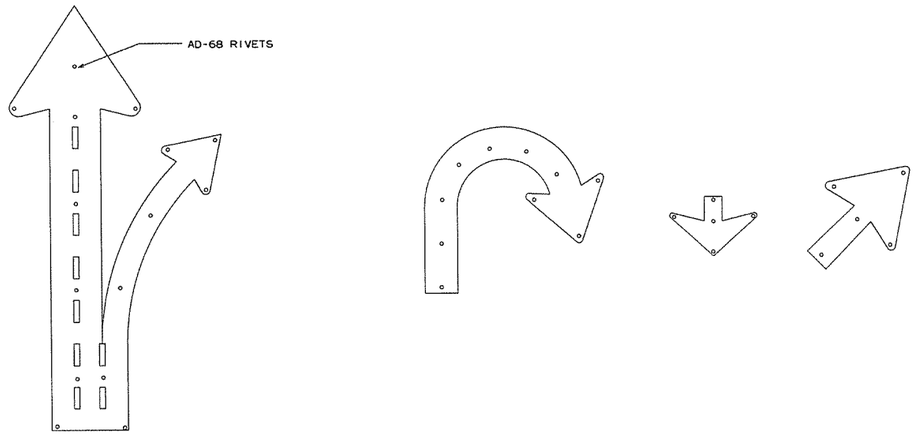

NOTES:

LEGEND ON GUIDE SIGNS ON THE MAIN LANES SHALL BE DEMOUNTABLE LEGEND.
LEGEND ON GUIDE SIGNS ON CROSS ROADS AND RAMPS SHALL BE DIRECT APPLIED.
THE DEMOUNTABLE AND DIRECT APPLIED LEGENDS SHALL BE TYPE IX SHEETING.

THE BACKGROUND ON ALL GUIDE SIGNS AND STANDARD SIGNS SHALL BE CONSTRUCTED USING TYPE III SHEETING.

TYPE IX SHEETING FOR BORDER, LEGEND, SHIELDS, ARROWS, OR OTHER COPY SHALL BE ORIENTED VERTICALLY AS PER MANUFACTURERS' DATUM MARKS, ORIENTATION MARKS, OR OTHER RECOMMENDATIONS.

SIGN LEGEND, SHIELDS, ARROWS OR OTHER COPY SHALL BE APPLIED WITH RIVETS ONLY.

NO OTHER METHOD OF APPLYING CHARACTERS IS ALLOWED.

			ARKANSAS STATE HIGHWAY COMMISSION
			MOUNTING DETAILS FOR DEMOUNTABLE LEGEND ON GUIDE SIGNS
9-12-13 DATE	ISSUED REVISION	FILMED	STANDARD DRAWING SHS-6

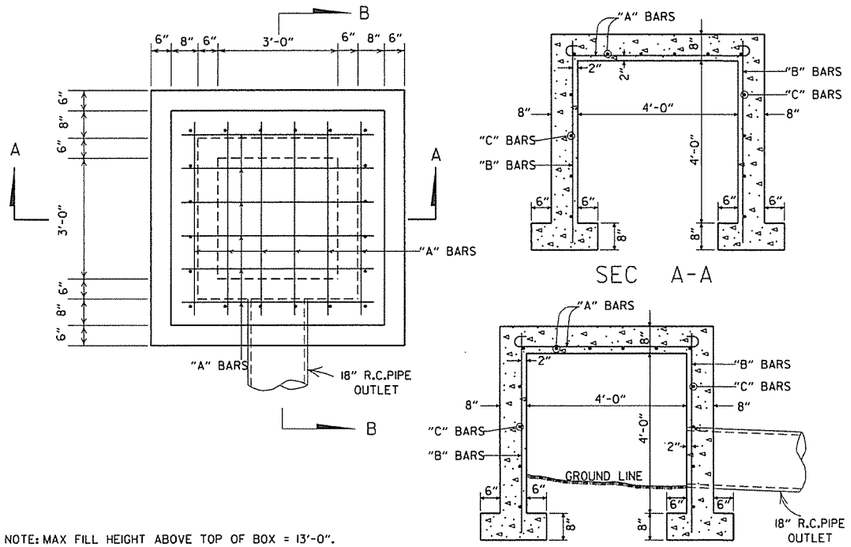

NOTE: MAX FILL HEIGHT ABOVE TOP OF BOX = 13'-0".

STEEL SCHEDULE

BARS	NUMBER	LENGTH	SPACING
"A"	12	6'-0"	10"
"B"	20	5'-0"	10 ½"
"C"	16	5'-0"	12"

ALL STEEL TO BE #4 BARS

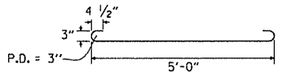

QUANTITIES

CONCRETE 3.31 CU. YDS.
REINFORCING STEEL 168 LB.

GENERAL NOTE:

THE PAY ITEMS FOR REINFORCED CONCRETE SPRING BOXES SHALL BE FOR THE QUANTITIES OF CONCRETE OF THE CLASS SPECIFIED, REINFORCING STEEL, EXCAVATION FOR STRUCTURES AND 18" R.C. PIPE CULVERT.

REINFORCED CONCRETE SPRING BOX

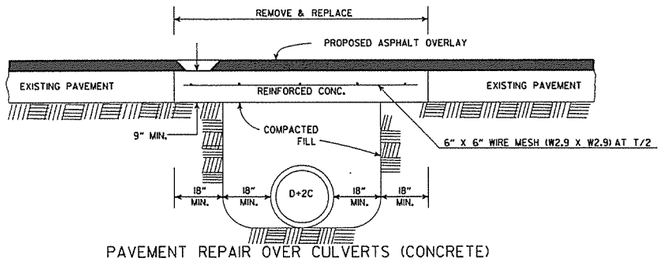

PAVEMENT REPAIR OVER CULVERTS (CONCRETE)

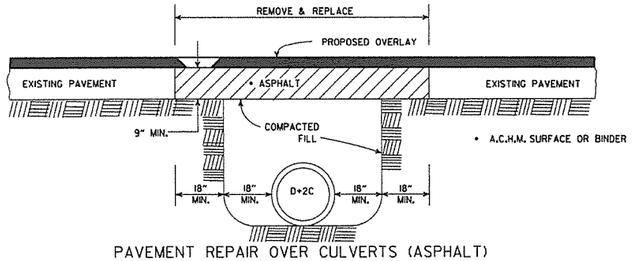

PAVEMENT REPAIR OVER CULVERTS (ASPHALT)

DETAIL SHOWING REPAIR OF EXISTING PAVEMENT AT CULVERT INSTALLATIONS

• A 2" MIN. HIGH CURB IS REQUIRED WHEN CONCRETE WALK IS ADJACENT TO THE HAND RAILING. PAYMENT FOR CURB SHALL BE CONSIDERED INCLUDED IN THE PRICE BID FOR CONCRETE WALKS.

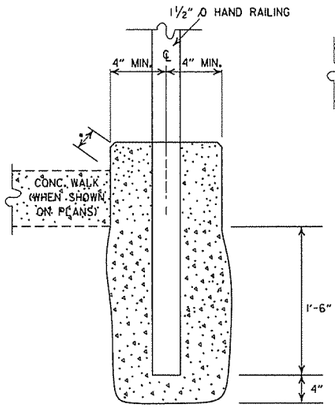

DETAIL OF HAND RAILING SET IN CONCRETE

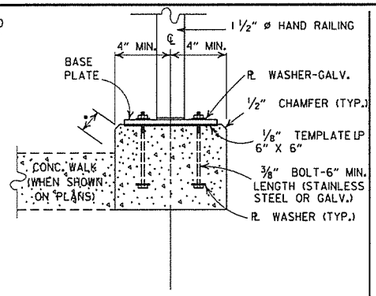

POST CONNECTION TO WALL

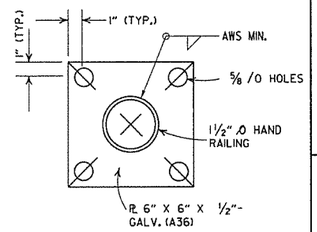

BASE PLATE

POST CONNECTION DETAILS

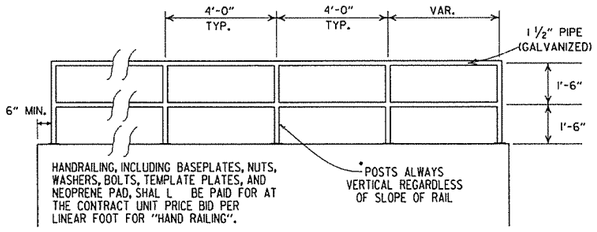

HAND RAILING SHAL L CONFORM TO SECTION 633.

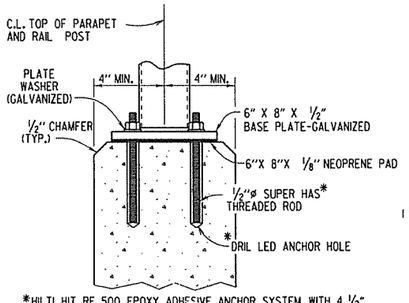

*HILTI HIT RE 500 EPOXY ADHESIVE ANCHOR SYSTEM WITH 4 ½" EMBEDMENT OR APPROVED EQUAL.

THE ADHESIVE ANCHOR SYSTEM SHAL L BE INSTAL LED IN ACCORDANCE WITH MANUFACTURER'S RECOMMENDATIONS.

POST CONNECTION TO WALL

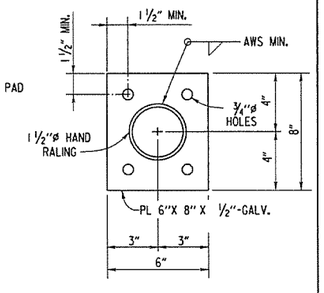

BASE PLATE

DETAILS OF ALTERNATE POST ANCHOR SYSTEM
(EPOXY ADHESIVE ANCHORS)

HAND RAILING DETAILS

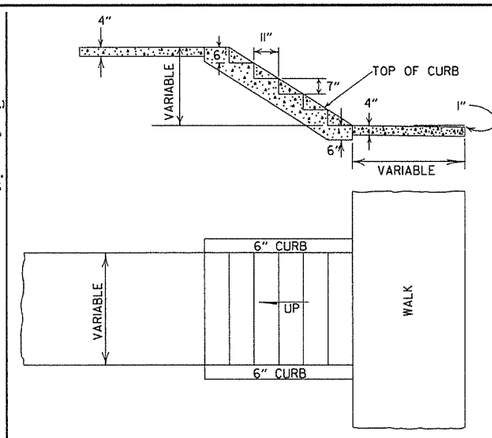

GENERAL NOTES

1. RISE AND TREAD DIMENSIONS OF STEPS MAY BE VARIED AS DIRECTED BY THE ENGINEER, HOWEVER, TREAD WIDTHS SHALL BE 11" MIN. ALL STEPS IN A FLIGHT SHALL HAVE CONSISTENT TREAD & RISER DIMENSIONS.
2. 1" TRANSVERSE EXPANSION JOINTS SHALL BE PLACED IN CONCRETE WALKS AT 45' INTERVALS.

DETAILS OF CONCRETE STEPS & WALKS

DATE	REVISION	DATE FILMED
9-12-13	REVISED REINFORCED CONCRETE SPRING BOX	
7-26-12	REMOVED RETAINING WALL DETAILS & REVISED HAND RAILING DETAILS	
4-17-08	REV. JOINT & FOOTING STEP DETAILS	
11-29-07	REVISED RETAINING WALL DRAINAGE	
5-25-06	REVISED PVMT REPAIR OVER CULVERTS (CONC); REVISED REINFORCED CONC SPRING BOX	
10-9-03	REVISED PIPE RAILING DETAILS TO HAND RAILING DETAILS	
4-10-03	REVISED RETAINING WALL DRAWING	
8-22-02	ADDED HAND RAILING DETAIL	
11-16-01	REVISED PVMT REPAIR OVER CULVERTS (CONC); CORRECTED SPELLING IN GENERAL NOTES	
11-18-98	ADDED GENERAL NOTES TO CONCRETE STEPS & WALKS	
7-02-98	ENLARGED PIPE	
4-03-97	ADDED NOTE TO STEEL BAR SCHED.	
10-18-96	CORRECTED SPELLING	
4-26-96	ADD WEEP HOLE;REV. JOINT SPACING IN RET. WALL	
6-2-94	CHANGED CONST. TO CONTRACTION JOINT	
10-1-92	CHANGED MESH FABRIC TO WIRE MESH	10-1-92
8-15-91	DELETED HDWL MODIFICATION DETAIL	8-15-91
11-8-90	DELETED COLD MIX FROM CULV'T. REPAIR	11-8-90
11-30-89	REV. RETAINING WALL STEEL SCHEDULE	11-30-89
11-17-88	V. BARS BEHIND ARROW	665-11-17-88
7-15-88	REV. PAVEMENT REPAIR ADDED HDWL. MODS, DEL. PIPE UNDERDRAINS	649-7-15-88
11-1-84	REV. TRENCH FOR PIPE UNDERDRAIN	510-11-1-84
1-4-83	ELIMINATED CONC. CLASS & ADDED CHAMFER NOTE	682-1-4-83
3-2-81	SPELLING OF "UNDERDRAIN"	721-3-2-81
4-20-79	REV. UNDERDRAIN DET& PAVEMENT REPAIR	674-4-20-79
2-2-76	12"MIN. GRAN. MAT'L. OVER PIPE	919-2-2-76
4-10-75	REM. SPECS. FOR GRAN. MAT'L.	568-4-10-75-853
5-22-74	GRANULAR MAT'L. TO BE SB-3	567-5-22-74-740
10-2-72	REVISED AND REDRAWN	564-10-16-72

ARKANSAS STATE HIGHWAY COMMISSION

DETAILS OF SPECIAL ITEMS

STANDARD DRAWING SI-1

RI-1



STANDARD 30"X30"
EXPRESSWAY 36"X36"
SPECIAL 48"X48"

RI-2

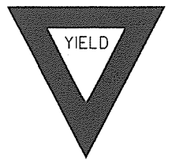

STD. 36"X36"X36"
EXPWY. 48"X48"X48"
FWY. 60"X60"X60"

R2-1

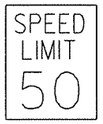

STD. 24"X30"
EXPWY. 36"X48"
FWY. 48"X60"

R2-5A



STD. 24"X30"
EXPWY. 36"X48"
FWY. 48"X60"

R2-5C



STD. 24"X30"
EXPWY. 36"X48"
FWY. 48"X60"

R4-1



STD. 24"X30"
EXPWY. 36"X48"
FWY. 48"X60"

R4-2



STD. 24"X30"
EXPWY. 36"X48"
FWY. 48"X60"

R5-1



STD. 30"X30"
EXPWY. 36"X36"
SPECIAL 48"X48"

RII-2



48"X30"

RII-3A

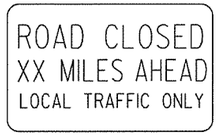

60"X30"

RII-4

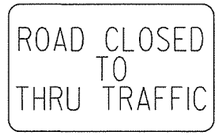

60"X30"

RSP-1



48"X30"

WI-1

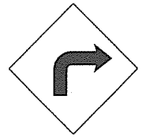

STD. 36"X36"
FWY. 48"X48"

WI-2



STD. 36"X36"
FWY. 48"X48"

WI-3



STD. 48"X48"

WI-4



STD. 48"X48"

WI-6

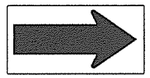

STD. 48"X24"
SPECIAL 60"X30"

WI-8

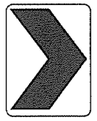

STD. 18"X24"
SPECIAL 24"X30"
EXPWY. 30"X36"
FWY. 36"X48"

W3-1

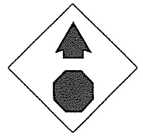

STD. 36"X36"
SPECIAL 48"X48"

W3-2

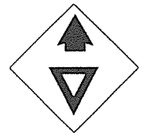

STD. 36"X36"
SPECIAL 48"X48"

W4-2

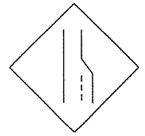

STD. 36"X36"
FWY. 48"X48"

W5-1



STD. 36"X36"
SPECIAL 48"X48"

W6-3



EXPWY. 36"X36"
SPECIAL 48"X48"

W8-7



EXPWY. 36"X36"
FWY. 48"X48"

W9-2



STD. 36"X36"
FWY. 48"X48"

WI3-1



STD. 24"X24"

W20-1



STD. 48"X48"

W20-2



STD. 48"X48"

W20-3



STD. 48"X48"

W20-4



STD. 48"X48"

W20-5



STD. 48"X48"

W20-7a



STD. 36"X36"
FWY. 48"X48"

W21-2



STD. 30"X30"
SPECIAL 36"X36"

W21-5



STD. 30"X30"
SPECIAL 36"X36"

W24-1



STD. 36"X36"

WI-4b



STD. 48"X48"

R56-1



STD. 18"X18"

W8-11



STD. 36"X36"
FWY. 48"X48"

W8-9



STD. 36"X36"
FWY. 48"X48"

G20-1

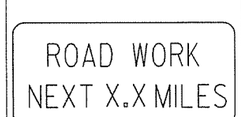

60"X24"

G20-2

48"X24"

OM-3L OM-3R

12"X36"

M4-9

STD. 30"X24"
SPECIAL 48"X36"
SPECIAL 60"X48"

M4-10

48"X18"

R55-1

FINES DOUBLE
IN WORK ZONES *

WHEN WORKERS
ARE PRESENT **

36"X60"

* USE 6" C LETTERS
** USE 4" D LETTERS

ADVANCE DISTANCES
(XXXX)

500 FT	½ MILE
1000 FT	¾ MILE
1500 FT	1 MILE
	AHEAD

GENERAL NOTES:

1. ALL TRAFFIC CONTROL DEVICES USED ON ROAD CONSTRUCTION SHALL CONFORM TO THE MANUAL ON UNIFORM TRAFFIC CONTROL DEVICES, LATEST EDITION, AND TO THE STANDARD HIGHWAY SIGNS, LATEST EDITION, OR AS APPROVED BY THE FEDERAL HIGHWAY ADMINISTRATION.

2. TRAFFIC CONTROL DEVICES SHALL BE SET UP JUST BEFORE THE START OF CONSTRUCTION OPERATIONS AND SHALL BE PROPERLY MAINTAINED DURING THE TIME SUCH CONDITIONS EXIST. THEY SHALL REMAIN IN PLACE ONLY AS LONG AS NEEDED AND REMOVED THEREAFTER.

3. EXISTING SIGNS AND CONSTRUCTION SIGNS SHALL BE KEPT IN PROPER POSITION, AND BE CLEAN AND LEGIBLE AT ALL TIMES. SIGNS THAT DO NOT APPLY TO EXISTING CONDITIONS SHALL BE REMOVED. SIGNS THAT ARE DAMAGED, DEFACED, OR THAT ACCUMULATE DIRT DURING CONSTRUCTION SHALL BE CLEANED, REPAIRED, OR REPLACED.

• 4. SIGNS ARE USUALLY MOUNTED ON A SINGLE POST, ALTHOUGH THOSE WIDER THAN 36" OR LARGER THAN 10 SQ. FT. SHALL BE MOUNTED ON TWO POSTS OR ABOVE A TYPE III BARRICADE.

• 5. SIGN POSTS DIRECT BURIED IN SOIL SHALL BE 2 LB. MINIMUM CHANNEL POST OR 4"x4" WOOD POSTS. CHANNEL POSTS SHALL BE PAINTED GREEN. WOOD POSTS SHALL BE PAINTED WHITE. ALL POSTS SHALL BE NEATLY CONSTRUCTED, AND SHALL BE REPLUMBED, CLEANED, OR REPAIRED AS NEEDED FOR THE DURATION OF THE JOB. THERE SHALL NOT BE MORE THAN 2 POSTS IN A 7' PATH FOR WOOD OR CHANNEL POSTS. ANY CHANNEL POST SPLICE SHALL BE IN ACCORDANCE WITH STANDARD DRAWING TC-3.

6. POST MOUNTED SIGNS IN RURAL AREAS SHALL BE CONSTRUCTED WITH THE NEAR EDGE OF THE SIGN FROM 6 TO 12 FEET FROM THE PAVEMENT EDGE. SIGNS IN URBAN AREAS AND BARRICADE MOUNTED SIGNS SHALL BE MOUNTED A MINIMUM OF 2 FEET FROM THE PAVEMENT EDGE.

7. ALL POST AND BARRICADE MOUNTED SIGNS MOUNTED IN URBAN AREAS SHALL BE MOUNTED A MINIMUM DISTANCE OF 7' FROM THE BOTTOM OF THE SIGN TO THE ROADWAY SURFACE. ALL POST AND BARRICADE MOUNTED SIGNS MOUNTED IN RURAL AREAS SHALL BE MOUNTED A MINIMUM DISTANCE OF 7' FROM THE BOTTOM OF THE SIGN TO THE ROADWAY SURFACE, EXCEPT A MINIMUM OF 6' SHALL BE USED WHEN MOUNTING AN ADVISORY SIGN BELOW A WARNING SIGN. TEMPORARY SIGNS MAY BE MOUNTED ON PORTABLE SUPPORTS FOR INTERMEDIATE TERM STATIONARY WORK CONDITIONS. THE SIGNS MINIMUM MOUNTING HEIGHT SHALL BE 5'. RETROREFLECTIVE DEVICES SHALL BE USED. TEMPORARY SIGNS MAY BE MOUNTED ON PORTABLE SUPPORTS FOR SHORT-TERM, SHORT DURATION, AND MOBILE CONDITIONS. THEY SHALL BE NO LESS THAN ONE (1) FOOT ABOVE THE TRAVELED WAY. LONG-TERM STATIONARY SIGNS SHALL BE DIRECT BURIED IN SOIL, UNLESS CONDITIONS NECESSITATE THE USE OF PORTABLE SIGNS, OR AS APPROVED BY THE ENGINEER. CONCRETE PADS, CONCRETE OR ROCK BALLAST, OR OTHER SOLID MATERIALS SHALL NOT BE UTILIZED WITH PORTABLE SIGN SUPPORTS.

8. FLAGGERS SHALL USE REFLECTORIZED STOP-SLOW PADDLES. FLAGS MAY BE USED ONLY FOR EMERGENCY SITUATIONS.

9. MOST OF THE SIGNS SHOWN ARE ORIENTED TO THE RIGHT. HOWEVER, THIS DOES NOT PRECLUDE THE USE OF MIRROR IMAGES OF THESE SIGNS WHERE THE REVERSE ORIENTATION MIGHT BETTER CONVEY TO MOTORISTS THE PROPER DIRECTION OF MOVEMENT.

10. R55-1 SIGNS SHALL BE PLACED AT LEAST 1500' BUT NOT MORE THAN 1 MILE IN ADVANCE OF THE WORK ZONE. IF A SPEED LIMIT REDUCTION IS IN EFFECT, THE SIGN SHALL BE PLACED A MINIMUM OF 500' IN ADVANCE OF THE "REDUCED SPEED AHEAD" SIGN.

• NOTE: SUPPORTS FOR SIGNS, BARRICADES, AND VERTICAL PANELS THAT ARE DIFFERENT FROM THE REQUIREMENTS SHOWN IN NOTES 4 & 5, BUT MEET THE REQUIREMENTS OF NCHRP-350 OR MANUAL FOR ASSESSING SAFETY HARDWARE (MASH), WILL BE ACCEPTED. COMPLIANCE WITH THE REQUIREMENTS OF NCHRP-350 OR MANUAL FOR ASSESSING SAFETY HARDWARE (MASH) IS REQUIRED FOR ALL PROJECTS.

DATE	REVISION	FILMED
12-15-11	REVISED W24-1	
11-17-10	DELETED W8-9a & ADDED W8-9	
10-15-09	ADDED REFERENCE TO MASH & ADDED SIGN W24-1	
4-17-08	REVISED SIGN DESIGNATIONS	
11-18-04	REVISED NOTES	
10-9-03	REVISED NOTE 1	
11-16-01	REVISED NOTE 7	
9-28-00	REVISED NOTE	
11-18-98	ADDED NOTE	
6-26-97	REVISED NOTE 5	
4-03-97	REVISED NOTE 5	
10-18-96	ADDED CONTROLLED ACCESS HWY. SIGN & TO NOTE 7	
10-12-95	ADDED R55-1	
6-8-95	REVISED TO CORRECT SIGN ILLUSTRATIONS	6-8-95
2-2-95	REVISED PER PART VI, MUTCD SEPT. 3, 1993	
8-15-91	DRAWN AND PLACED IN USE	

ARKANSAS STATE HIGHWAY COMMISSION

STANDARD TRAFFIC CONTROLS FOR HIGHWAY CONSTRUCTION

STANDARD DRAWING TC-1

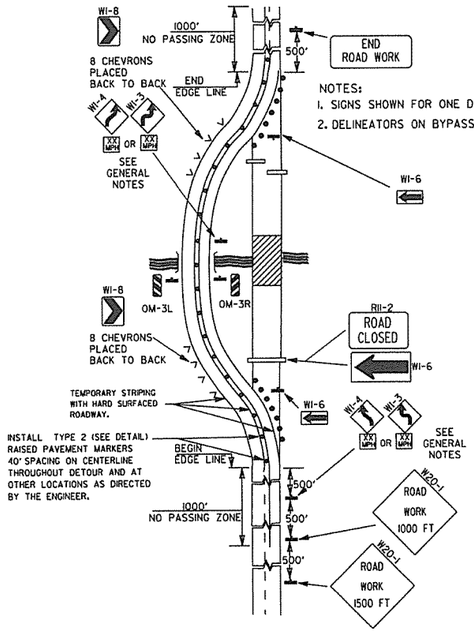

NOTES:
1. SIGNS SHOWN FOR ONE DIRECTION OF TRAVEL ONLY.
2. DELINEATORS ON BYPASS WHERE NEEDED.

(A) TYPICAL APPLICATION OF TRAFFIC CONTROL DEVICES ON A 2-LANE HIGHWAY WHERE THE ENTIRE ROADWAY IS CLOSED AND A BYPASS DETOUR IS PROVIDED.

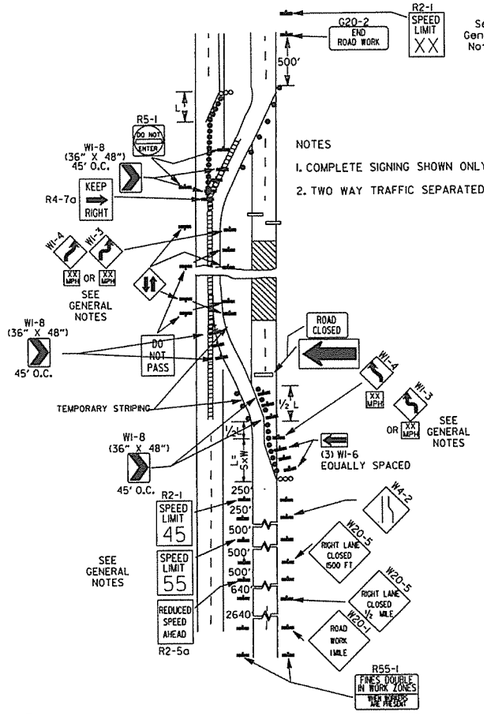

NOTES
1. COMPLETE SIGNING SHOWN ONLY IN CROSSOVER DIRECTION.
2. TWO WAY TRAFFIC SEPARATED WITH POSITIVE BARRIER.

(B) TYPICAL APPLICATION - 4-LANE DIVIDED ROADWAY WHERE ONE ROADWAY IS CLOSED.

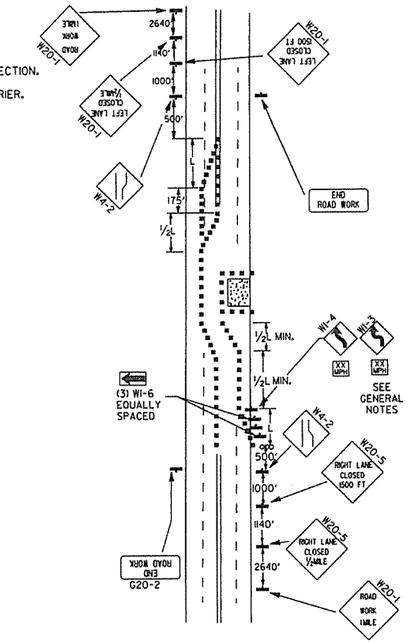

(C) TYPICAL APPLICATION - 4-LANE UNDIVIDED ROADWAY WHERE HALF OF THE ROADWAY IS CLOSED.

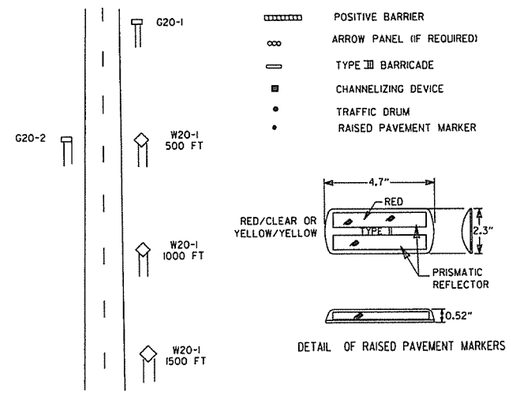

TYPICAL ADVANCE WARNING SIGN PLACEMENT

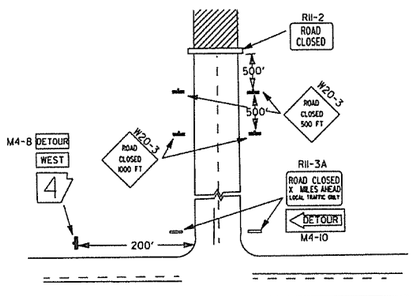

NOTES:
1. REGULATORY TRAFFIC CONTROL DEVICES TO BE MODIFIED AS NEEDED FOR THE DURATION OF THE DETOUR.
2. STREET NAMES MAY BE USED WHEN DESIRABLE FOR DIRECTING DETOURED TRAFFIC.

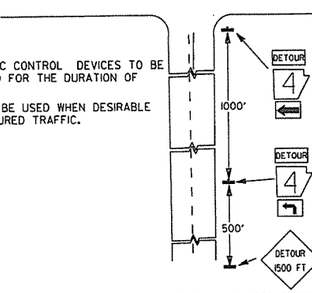

(D) TYPICAL APPLICATION - ROADWAY CLOSED BEYOND DETOUR POINT.

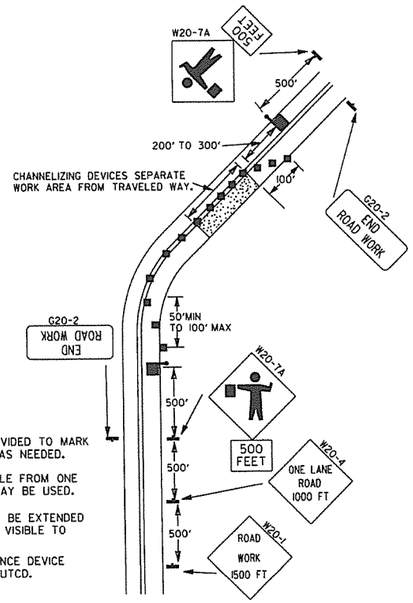

NOTES:
1. FLOOD LIGHTS SHOULD BE PROVIDED TO MARK FLAGGER STATIONS AT NIGHT AS NEEDED.
2. IF ENTIRE WORK AREA IS VISIBLE FROM ONE STATION, A SINGLE FLAGGER MAY BE USED.
3. CHANNELIZING DEVICES ARE TO BE EXTENDED TO A POINT WHERE THEY ARE VISIBLE TO APPROACHING TRAFFIC.
4. AUTOMATED FLAGGER ASSISTANCE DEVICE (AFAD) OPTIONAL. REFER TO MUTCD.

(E) TYPICAL APPLICATION OF TRAFFIC CONTROL DEVICES ON 2-LANE HIGHWAY WHERE ONE LANE IS CLOSED AND FLAGGING IS PROVIDED.

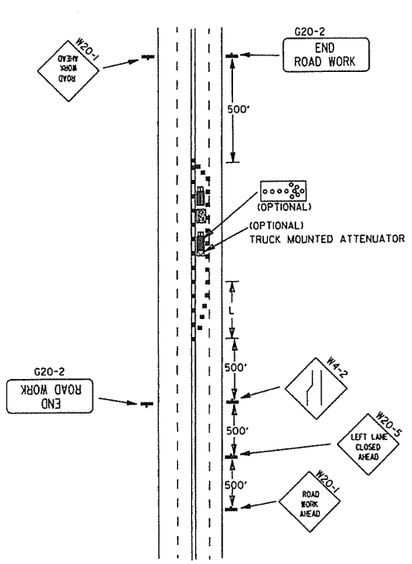

(F) TYPICAL APPLICATION - 4-LANE UNDIVIDED ROADWAY WITH INSIDE LANE CLOSED.

TAPER FORMULAE:

L=SXW FOR SPEEDS OF 45MPH OR MORE.

$L=\frac{WS^2}{60}$ FOR SPEEDS OF 40MPH OR LESS.

WHERE:
L= MINIMUM LENGTH OF TAPER.
S= NUMERICAL VALUE OF POSTED SPEED LIMIT PRIOR TO WORK OR 85TH PERCENTILE SPEED.
W= WIDTH OF OFFSET.

GENERAL NOTES:

1. ADVISORY SPEED POSTED ON WI-3 OR WI-4 CURVE WARNING SIGNS TO BE DETERMINED AT SITE. USE WI-4 WHEN SPEED IS GREATER THAN 30MPH AND WI-3 WHEN 30MPH OR LESS.
2. WHEN THE EXISTING SPEED LIMIT IS 55MPH AND THE PLANS REQUIRE A SPEED LIMIT OF 45MPH, THE R2-1(55) SHALL BE OMITTED AND THE R2-5A SHALL BE INSTALLED AT THAT LOCATION. ADDITIONAL R2-1 45MPH SPEED LIMIT SIGNS SHALL BE INSTALLED AT A MAXIMUM OF 1MILE INTERVALS. AT THE END OF THE WORK AREA A R2-1(XX) SHALL BE INSTALLED TO MATCH ORIGINAL SPEED LIMIT.
3. WHEN THE EXISTING SPEED LIMIT IS 65MPH AND THE PLANS REQUIRE A SPEED LIMIT OF 55MPH, THE R2-1(45) SHALL BE OMITTED. ADDITIONAL R2-1 55MPH SPEED LIMIT SIGNS SHALL BE INSTALLED AT A MAXIMUM OF 1MILE INTERVALS. AT THE END OF THE WORK AREA A R2-1(XX) SHALL BE INSTALLED TO MATCH ORIGINAL SPEED LIMIT.
4. THE MAXIMUM SPACING BETWEEN CHANNELIZING DEVICES IN A TAPER SHOULD BE APPROXIMATELY EQUAL IN FEET TO THE SPEED LIMIT. BEYOND THE TAPER, MAXIMUM SPACING SHALL BE TWO TIMES THE SPEED LIMIT, OR AS DIRECTED BY THE ENGINEER.
5. WARNING LIGHTS AND/OR FLAGS MAY BE MOUNTED TO SIGNS OR CHANNELIZING DEVICES AT NIGHT AS NEEDED.
6. PAVEMENT MARKINGS NO LONGER APPLICABLE WHICH MIGHT CREATE CONFUSION IN THE MINDS OF VEHICLE OPERATORS SHALL BE REMOVED OR OBLITERATED AS SOON AS PRACTICABLE.
7. TRAILER MOUNTED DEVICES SUCH AS ARROW PANELS AND PORTABLE CHANGEABLE MESSAGE SIGNS SHALL BE DELINEATED BY AFFIXING CONSPICUITY MATERIAL IN A CONTINUOUS LINE ON THE FACE OF THE TRAILER. WHEN PLACED ON OR ADJACENT TO THE SHOULDER AND NOT BEHIND A POSITIVE BARRIER, THESE DEVICES SHALL BE DELINEATED BY PLACING FIVE (5) TRAFFIC DRUMS, EQUALLY SPACED ALONG THE TRAFFIC SIDE OF THE DEVICE.

DATE	REVISION	FILMED
9-12-13	REVISED DETAIL OF RAISED PAVEMENT MARKERS	
3-11-10	ADDED (AFAD)	
11-20-08	REVISED SIGN DESIGNATIONS	
11-18-04	ADDED GENERAL NOTE	
10-18-96	ADDED R55-1	
4-26-96	CORRECTED (a) BEHIND G20-2	
6-8-95	CORRECTED SIGN IDENT. ON W1-4A	6-8-95
2-2-95	REVISED PER PART VI, MUTCD, SEPT. 3, 1993	
8-15-91	DRAWN AND PLACED IN USE	

ARKANSAS STATE HIGHWAY COMMISSION

STANDARD TRAFFIC CONTROLS FOR HIGHWAY CONSTRUCTION

STANDARD DRAWING TC-2

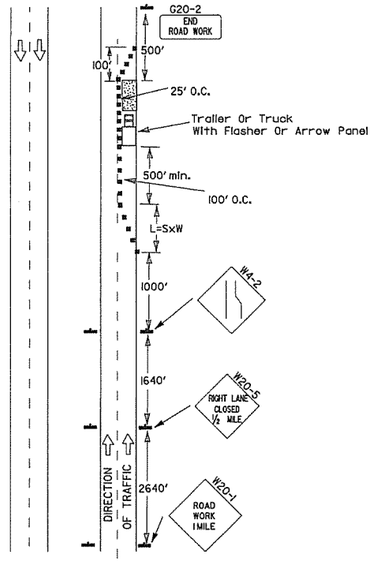

(A) Typical application - daytime maintenance operations of short duration on a 4-lane divided roadway where half of the roadway is closed.

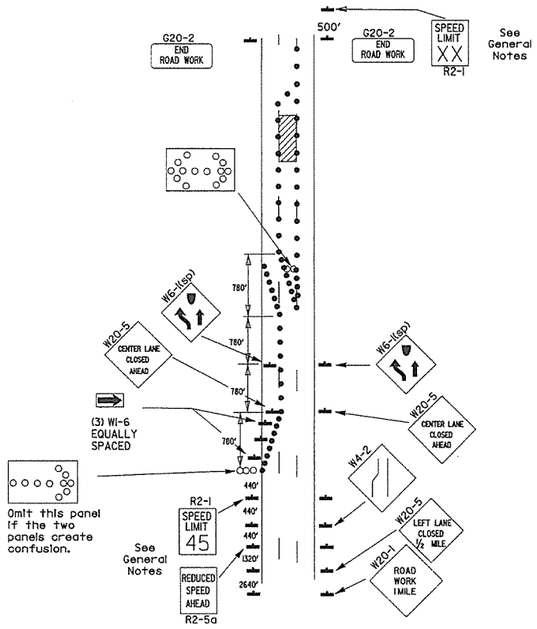

(B) Typical application - 3-lane oneway roadway where center lane is closed.

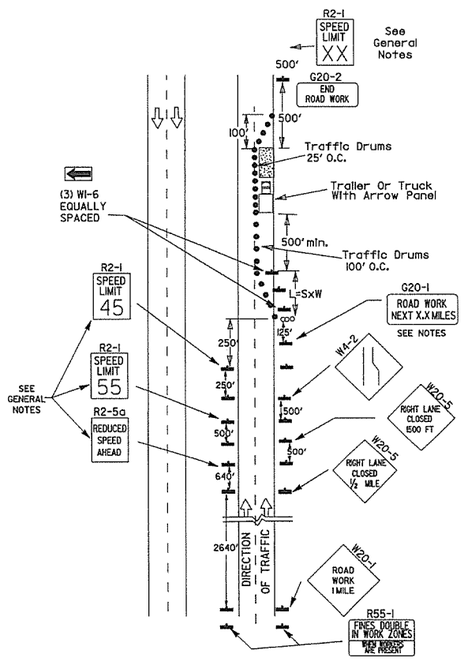

(C) Typical application - construction operations of intermediate to long term duration on a 4-lane divided roadway where half of the roadway is closed.

KEY:

- ooo Arrow Panel (If Required)
- ■ Channelizing Device
- ● Traffic drum

GENERAL NOTES:

1. A speed limit reduction may be implemented ONLY when designated in the plan or when recommended by the Roadway Design Division.
2. When the existing speed limit is 55mph and the plans require a speed limit of 45mph, the R2-1(55) shall be omitted and the R2-5A shall be installed at that location. Additional R2-1 45mph speed limit signs shall be installed at a maximum of 1mile intervals. At the end of the work area a R2-1(XX) shall be installed to match original speed limit.
3. When the existing speed limit is 65mph and the plans require a speed limit of 55mph, the R2-1(45) shall be omitted. Additional R2-1 55mph speed limit signs shall be installed at a maximum of 1mile intervals. At the end of the work area a R2-1(XX) shall be installed to match original speed limit.
4. The maximum spacing between channelizing devices in a taper should be approximately equal in feet to the speed limit. Beyond the taper, maximum spacing shall be two times the speed limit or as directed by the Engineer.
5. Warning lights and/or flags may be mounted to signs or channelizing devices at night as needed.
6. Pavement markings no longer applicable which might create confusion in the minds of vehicle operators shall be removed or obliterated as soon as practicable.
7. The G20-1 sign will be required on jobs of over two miles in length. When the lane closure is not at the beginning of the project, the G20-1 sign shall be erected 125' in advance of the job limit. Additional W20-1 (1 MILE) signs are not required in advance of lane closures that begin inside the project limits.
8. Flaggers shall use STOP/SLOW paddles for controlling traffic through work zones. Flags may be used only for emergency situations.
9. All plastic drums and cones shall meet the requirements of NCHRP-350 or Manual For Assessing Safety Hardware (MASH).
10. Trailer mounted devices such as arrow panels and portable changeable message signs shall be delineated by affixing conspicuity material in a continuous line on the face of the trailer. When placed on or adjacent to the shoulder and not behind a positive barrier, these devices shall be delineated by placing five (5) traffic drums, equally spaced along the traffic side of the device.

Channelizing devices

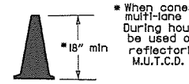

* When cones are used on freeways and multi-lane highways, they shall be 28" min. During hours of darkness, 28" cones shall be used on all roadways, and shall be reflectorized in accordance with the M.U.T.C.D.

CONES

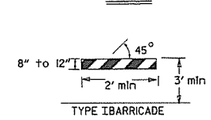

PLASTIC DRUM

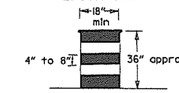

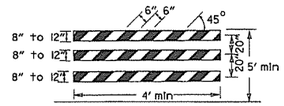

NOTE:
For all road closures, the Type III barricades shall be of sufficient length to extend across entire roadway.

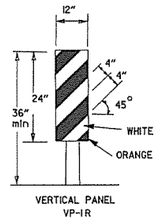

VERTICAL PANEL PLACEMENT

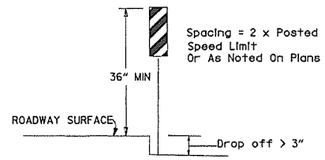

TRAFFIC CONTROL DEVICES
FOR
VERTICAL PAVEMENT DIFFERENTIALS

VERTICAL DIFFERENTIAL	LOCATIONS	TRAFFIC CONTROL
1" to 3"	Centerline, lane lines	W8-11
1" to 3"	Edge of shoulder	W8-9
Greater than 3"	Lane lines	Standard lane closure required
Greater than 3"	Edge of traveled lane	*RSP-1 and vertical panels, drums or concrete barrier
Greater than 3"	Edge of shoulder	*Vertical panels, drums or concrete barrier

* When shown on the plans concrete barrier will be used.

When the shoulder area is used as part of the traveled lane and there is insufficient width to place drums on the remaining shoulder width, then vertical panels shall be used.

FLAG

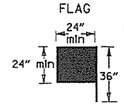

Flag shall be of good grade red material

STOP SLOW PADDLE

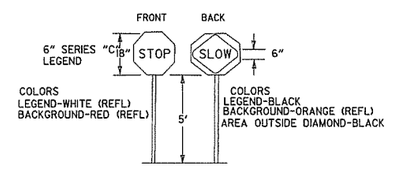

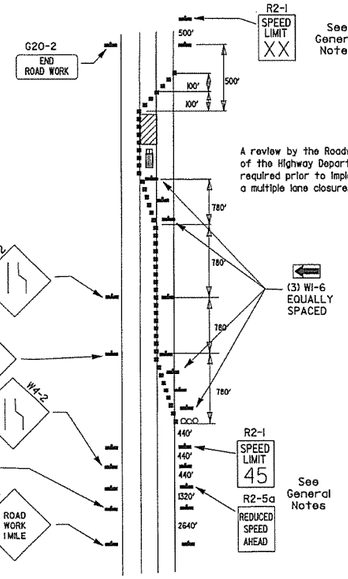

(D) Typical application - closing multiple lanes of a multilane highway.

DETAIL OF SPLICES

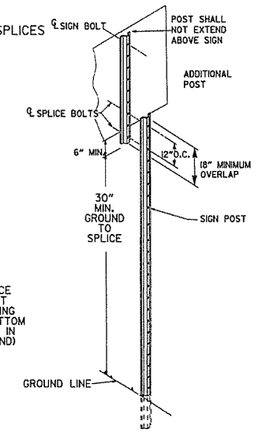

NOTES: USE SPLICES ONLY WHEN NECESSARY FOR INSTALLATION. TYPICAL INSTALLATION SHOULD HAVE NO SPLICES (SEE STD. DRAWING NO. SHS-2)

NORMAL INSTALLATIONS WILL REQUIRE 1/4" DIA. BOLTS TO MOUNT SIGNS TO POST AND 5/16" DIA. BOLTS TO ASSEMBLE THE VARIOUS POST SUPPORTS. EACH OF THESE BOLTS SHALL BE CARRIAGE BOLTS.

SIGN POSTS SHALL BE PAINTED GREEN; SIGNS SHALL NOT BE PAINTED, AND ALL SIGN POSTS SHALL BE PLUMB.

DATE	REVISION	FILMED
10-15-09	ADDED REFERENCE TO MASH	
11-20-08	REVISED SIGN DESIGNATIONS	
11-18-04	ADDED NOTE	
10-1-98	ADDED NOTE	
4-03-97	ADDED (SP) TO W6-1 & REVISED TRAFFIC CONTROL DEVICES NOTE	
10-18-96	ADDED R55-1	
10-12-95	MOVED UPPER SPLICE	
6-8-95	REVISED SPLICE DETAIL, TEXT	6-8-95
2-2-95	REVISED PER PART VI, MUTCD, SEPT. 3, 1993	
8-15-91	DRAWN AND PLACED IN USE	

ARKANSAS STATE HIGHWAY COMMISSION

STANDARD TRAFFIC CONTROLS FOR HIGHWAY CONSTRUCTION

STANDARD DRAWING TC-3

REINFORCING BAR TABLE PER BARRIER UNIT

MARK	LOCATION	BAR SIZE	(NO. BARS)	SKETCH
H-1	HORIZONTAL IN BARRIER TIED INSIDE V-1 BARS	#5	(6)	19'-3"
H-2	CENTERED ABOVE DRAIN SLOTS LONG. & TRANSVERSELY	#5	(6)	6'-6"
H-3	TIED ABOVE H-1 BARS TO SUPPORT H-2. TIED TO V-1	#4	(2)	1'-6"
S-1	OVER LIFT HOLES	#4	(2)	2'-5", 90°, 3 3/8" R, LIFTING HOLE
S-2	HORIZ. AROUND SLOTS BETWEEN V-1'S @ DRAIN SLOTS	#4	(2)	1 1/2" R, SLOTS, 7", 1'-6", 1" MIN. CLEAR TO BAR; 5'-1" BAR W/(4) 1 1/2" R BENDS & MIN. 1'-0" OVERLAP
V-1	VERTICAL IN BARRIER(3) EACH END & (2) AT EACH DRAIN SLOTS	#5	(16)	TOTAL LENGTH 4'-9"; 2 3/16" R; 12°; 9 1/2"; 2'-1 3/8"; 4 3/8"

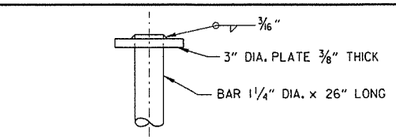

CONNECTING PIN

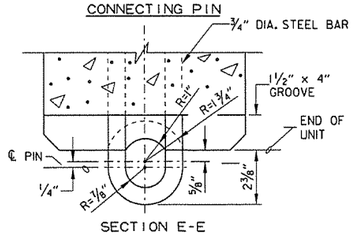

SECTION E-E

CONNECTION DETAILS

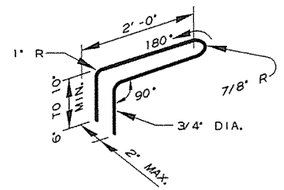

CONNECTION LOOP

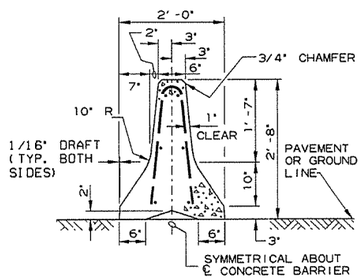

SECTION A-A

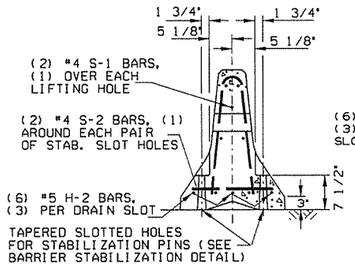

SECTION B-B

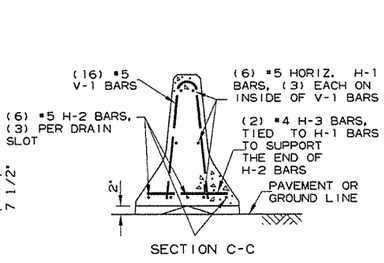

SECTION C-C

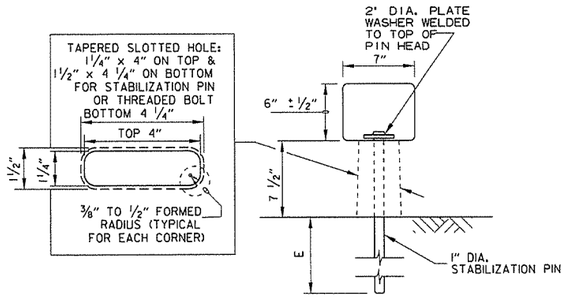

BARRIER STABILIZATION DETAIL

ROADWAY SECTION

(E) 4" - Concrete Pavement
8" - Asphalt Pavement
12" - Shoulder Areas

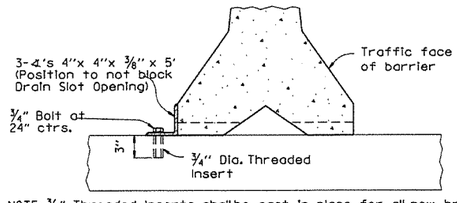

NOTE: 3/4" Threaded Inserts shall be cast in place for all new bridge decks and drilled and grouted for existing bridge decks. Inserts shall have a minimum ultimate load capacity of 8000 lbs. in tension. After removal of barrier, bolts, and angles, the inserts shall be filled with approved non-shrink epoxy.

BARRIER STABILIZATION DETAIL

BRIDGE DECKS

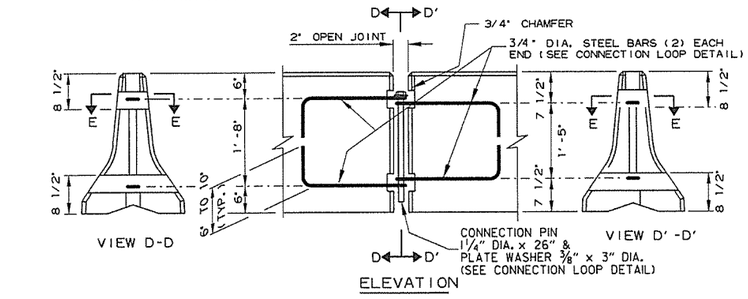

VIEW D-D

VIEW D'-D'

ELEVATION

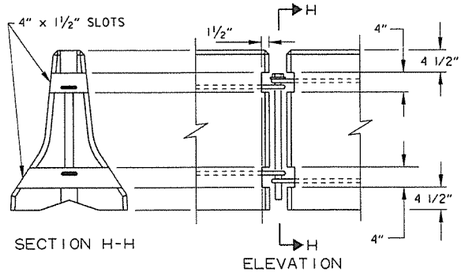

SECTION H-H

ELEVATION

BARRIER REMOVAL SLOT DETAILS

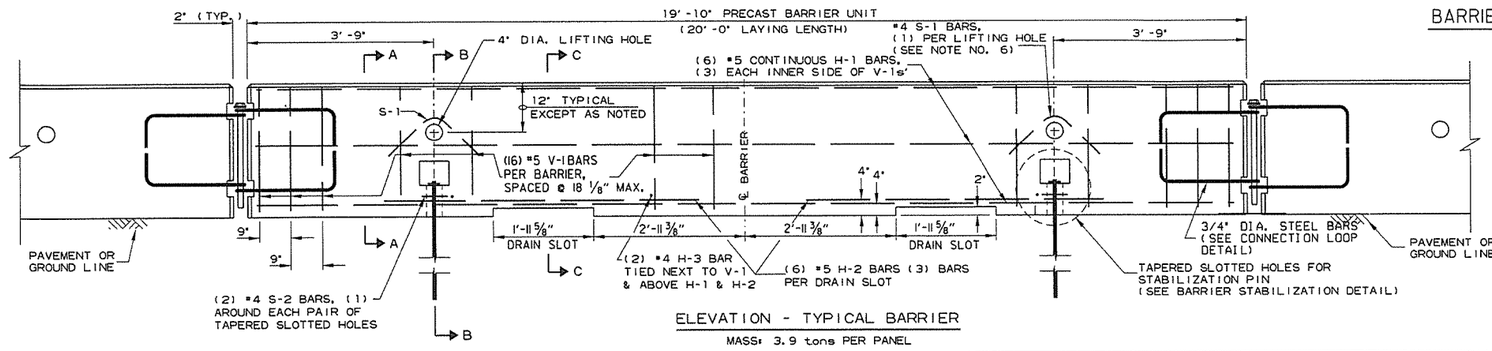

ELEVATION - TYPICAL BARRIER

MASS: 3.9 tons PER PANEL

General Notes

1. The contractor shall furnish the Precast Concrete Barrier Units and shall be responsible for the manufacture, shipment, storage, placement and removal. At the completion of the project, the precast units will remain the property of the contractor.

2. Materials shall meet the following minimum requirements:
   Concrete: 2500 psi compressive strength at 28 days.
   Reinforcing Steel: AASHTO M 31 or M 53, Grade 60
   Structural Steel: AASHTO-M270 Grade 36 shall be used for the Connection Pin, Connection Loops, and Stabilization Pins. A One Piece Pin with a 3" rounded top may be used in place of the detailed Connection Pin.
   Delineators: Delineators shall be mounted at 10' spacing on top of precast barrier.

   In applications where barrier wall is within 6 feet of a traffic lane, additional delineators shall be placed on the barrier at 10' spacing approximately one (1) foot from the top of the barrier. Delineators shall be on the AHTD Qualified Products List for Construction Concrete Barrier Markers.
   Delineator color shall be in accordance with the Manual on Uniform Traffic Control Devices.
   Payment for delineators shall be considered included in the price bid per Lin. Ft. for "Furnishing and Installing Precast Concrete Barrier". The contractor shall certify to the Engineer that the material and the design used in the precast barrier units meets the requirements as shown on this standard drawing.

3. Other Precast Concrete Barriers that have been crash tested and approved by the Federal Highway Administration to meet the requirements of NCHRP-350 test level 3 or Manual For Assessing Safety Hardware (MASH) will be accepted in lieu of the barrier shown. Drain slots shall be provided as needed or as directed by the Engineer. The Contractor shall furnish a certification of NCHRP Report 350 or Manual For Assessing Safety Hardware (MASH) compliance for any other types of precast barrier to be used. The certification shall state that the precast concrete barrier meets the requirements of NCHRP Report 350 or Manual For Assessing Safety Hardware (MASH) and include a copy of the Federal Highway Administration's (FHWA) approval letter with all attachments. Precast concrete barrier units shall be fabricated and installed in accordance with crash testing and documentation provided in the FHWA approval letter. Mixing of shapes will not be allowed in a continuous line of units.

4. Dowel holes in pavement or bridge slabs that are to remain in place shall be filled. Holes in concrete pavement and bridge slabs shall be filled with an approved non-shrink epoxy grout. Holes in asphalt pavement shall be filled with an approved asphalt joint filler. Payment for drilling and filling holes to be included in the price for various barrier items.

5. Attach Units To Roadway Surface with Stabilization Pins and to Deck Slabs using bolts when required.

6. A 4" White PVC Sleeve may be used to form the Lifting Hole and if used the Sleeve is to be left in place.

DATE	REVISION	FILMED
2-27-14	REVISED BARRIER STABILIZATION DETAIL	
10-15-09	ADDED REFERENCE TO MASH	
8-5-09	REV. NOTE 3 CONCERNING DRAIN SLOTS	
11-29-07	REVISED NOTE 3	
5-25-06	DELETED GENERAL NOTE 7	
11-18-04	REVISED BARRIER STABILIZATION DETAIL BRIDGE DECKS	
4-10-03	REVISED GENERAL NOTE 2	
8-22-02	ISSUED NEW DRAWING	

ARKANSAS STATE HIGHWAY COMMISSION

STANDARD TRAFFIC CONTROLS FOR HIGHWAY CONSTRUCTION - TEMPORARY PRECAST BARRIER

STANDARD DRAWING TC-4

Ⓐ 4 feet or greater preferred. If less than 4 feet, Precast Units shall be connected to slab (SEE BARRIER STABILIZATION DETAIL-BRIDGE DECKS STD. DRWG. TC-4)

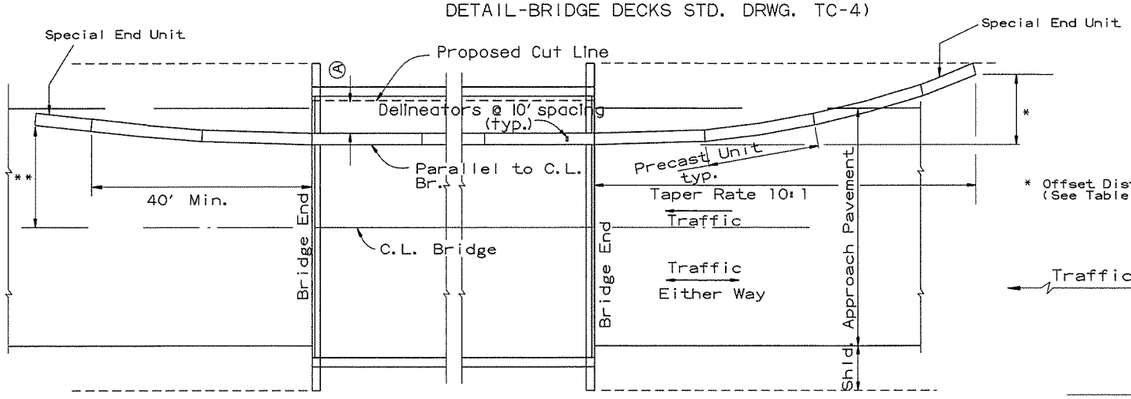

BARRIER PLACEMENT ALONG BRIDGE WITH OFFSET

No Scale

* Offset Distance (See Table)

** Offset Distance for Two Way Traffic Only

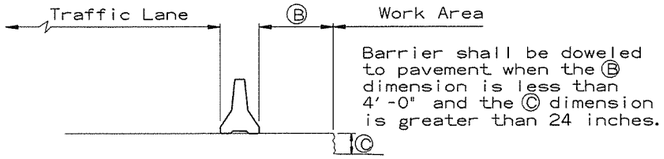

Barrier shall be doweled to pavement when the Ⓑ dimension is less than 4'-0" and the Ⓒ dimension is greater than 24 inches.

SECTION J-J

No Scale

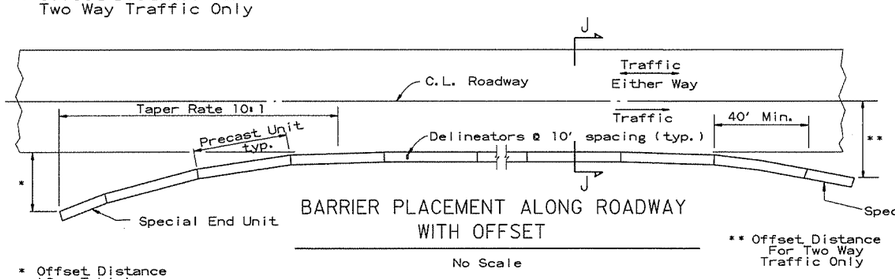

BARRIER PLACEMENT ALONG ROADWAY WITH OFFSET

No Scale

* Offset Distance (See Table)

** Offset Distance For Two Way Traffic Only

Offset Distance Table

Speed (MPH)	Offset Distance (FT.)
≤ 45	12
> 45	18

If offset distance is not attainable, then see 'Barrier Placement With Attenuator' Detail shown below.

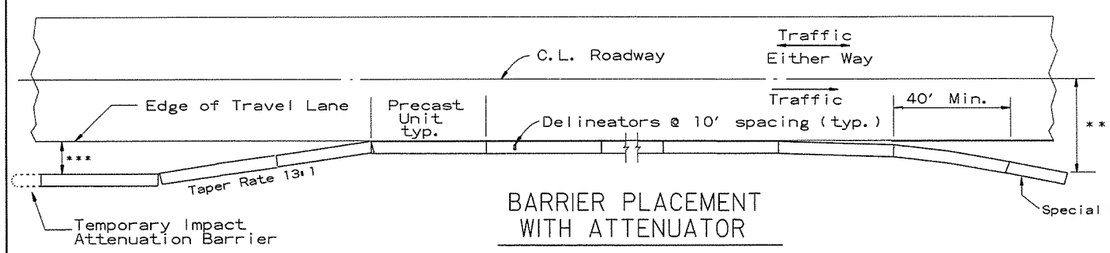

BARRIER PLACEMENT WITH ATTENUATOR

No Scale

*** Min. 3'-0" From Edge of Travel Lane to Nearest Edge of Attenuator

** Offset Distance For Two Way Traffic Only

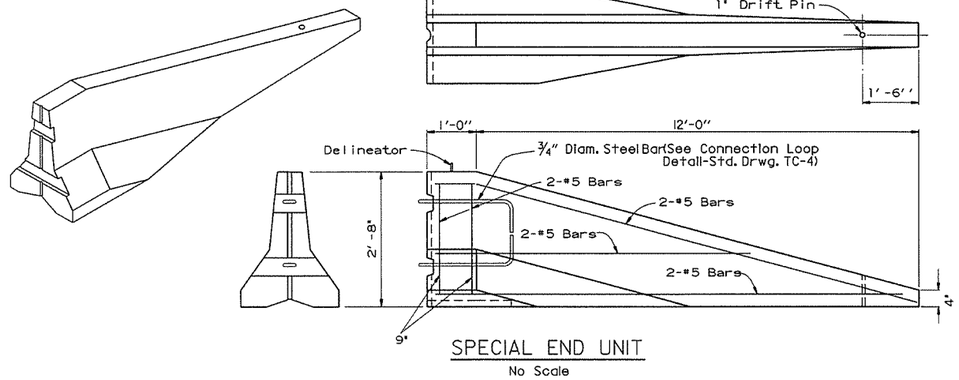

SPECIAL END UNIT

No Scale

General Notes

When shown on the Plans, the ends of the Temporary Precast Concrete Barrier shall be protected with an NCHRP-350 or Manual For Assessing Safety Hardware (MASH) approved Crash Cushion. Payment for Crash Cushions shall be made under the item of "Temporary Impact Attenuation Barrier."

DATE	REVISION	FILMED
10-15-09	ADDED REFERENCE TO MASH	
5-25-06	REVISED BARRIER PLACEMENT	
8-22-02	ISSUED NEW DRAWING	

ARKANSAS STATE HIGHWAY COMMISSION

STANDARD TRAFFIC CONTROLS FOR HIGHWAY CONSTRUCTION - TEMPORARY PRECAST BARRIER

STANDARD DRAWING TC-5

GENERAL NOTES

INSTALL A MINIMUM OF 2 UPSLOPE STAKES AND 4 DOWNSLOPE STAKES AT AN ANGLE TO WEDGE WATTLE TO BOTTOM OF DITCH.

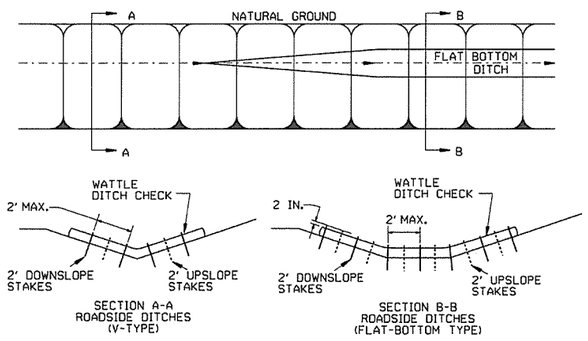

WATTLE DITCH CHECK (E-1)

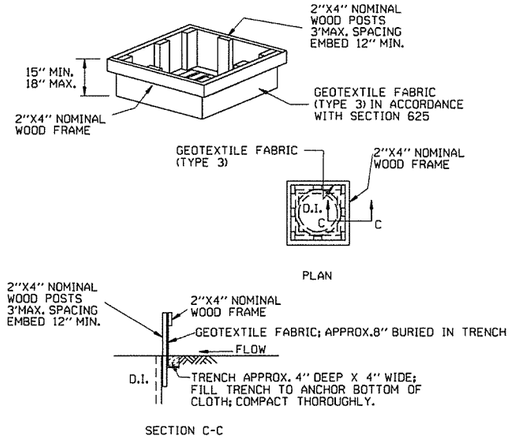

DROP INLET SILT FENCE (E-7)

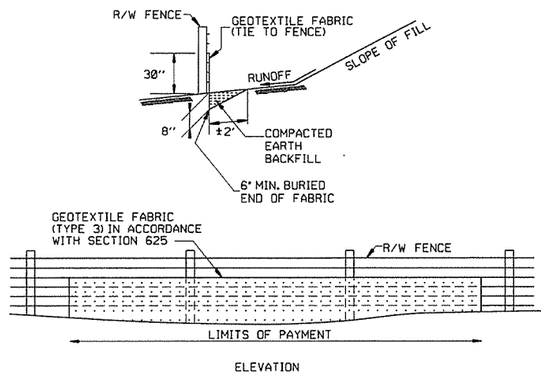

SILT FENCE ON R/W FENCE (E-4)

GENERAL NOTES

GEOTEXTILE FABRIC SHALL BE SPLICED TOGETHER WITH A SEWN SEAM ONLY AT A SUPPORT POST, OR TWO SECTIONS OF FENCE MAY BE OVERLAPPED INSTEAD. PAYMENT OF ADDITIONAL MATERIAL FOR OVERLAP WILL NOT BE MADE.

GENERAL NOTES

1. STRAW BALES SHALL BE INSTALLED SO THAT THE BINDINGS ARE ORIENTED AROUND THE SIDES RATHER THAN ALONG THE TOPS AND BOTTOMS OF THE BALES. THE BALES SHALL BE A MINIMUM OF 30 INCHES IN LENGTH.

2. NO GAPS SHALL BE LEFT BETWEEN BALES.

3. BALED STRAW FILTER BARRIERS COMPLETED AND ACCEPTED WILL BE MEASURED BY THE BALE IN PLACE AS AUTHORIZED BY THE ENGINEER AND WILL BE PAID FOR AT THE CONTRACT UNIT PRICE BID PER BALE FOR BALED STRAW DITCH CHECKS.

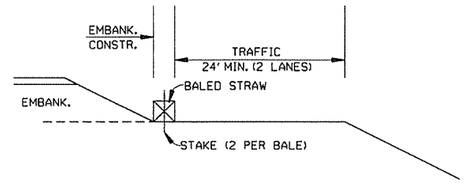

BALED STRAW FILTER BARRIER (E-2)

NUMBER OF SAND BAGS AND ARRANGEMENT VARIABLE WITH ON-SITE CONDITIONS.

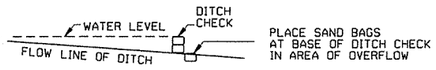

PLACE SAND BAGS AT BASE OF DITCH CHECK IN AREA OF OVERFLOW

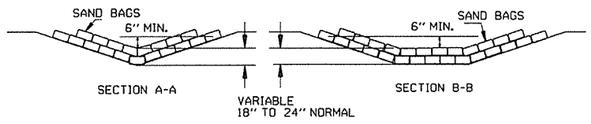

SAND BAG DITCH CHECK (E-5)

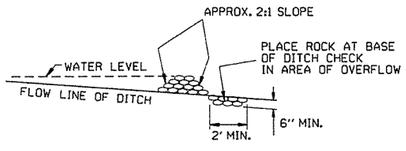

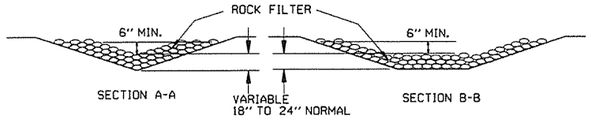

ROCK DITCH CHECK (E-6)

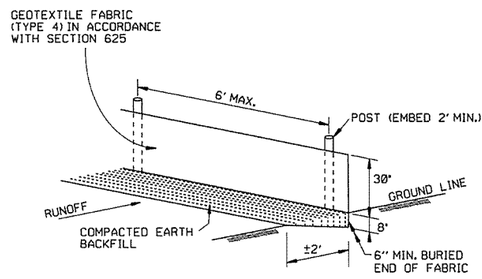

SILT FENCE (E-11)

GENERAL NOTES

GEOTEXTILE FABRIC SHALL BE SPLICED TOGETHER WITH A SEWN SEAM ONLY AT A SUPPORT POST OR TWO SECTIONS OF FENCE MAY BE OVERLAPPED INSTEAD. PAYMENT OF ADDITIONAL MATERIAL FOR OVERLAP WILL NOT BE MADE.

DATE	REVISION	FILMED
12-15-11	DELETED BALED STRAW DITCH CHECK & ADDED WATTLE DITCH CHECK	
11-18-98	ADDED NOTES	
7-02-98	ADDED BALED STRAW FILTER BARRIER (E-2)	
7-20-95	REVISED SILT FENCE E-4 AND E-11	7-20-95
7-15-94	REV. E-4 & E-11 MIN. 13" BURIED END OF FABRIC	
6-2-94	REVISED E-1,4,7 & 11; DELETED E-2 & 3	6-2-94
4-1-93	REDRAWN	
10-1-92	REDRAWN	
8-2-76	ISSUED R.D.M.	298-7-28-76

ARKANSAS STATE HIGHWAY COMMISSION

TEMPORARY EROSION CONTROL DEVICES

STANDARD DRAWING TEC-1

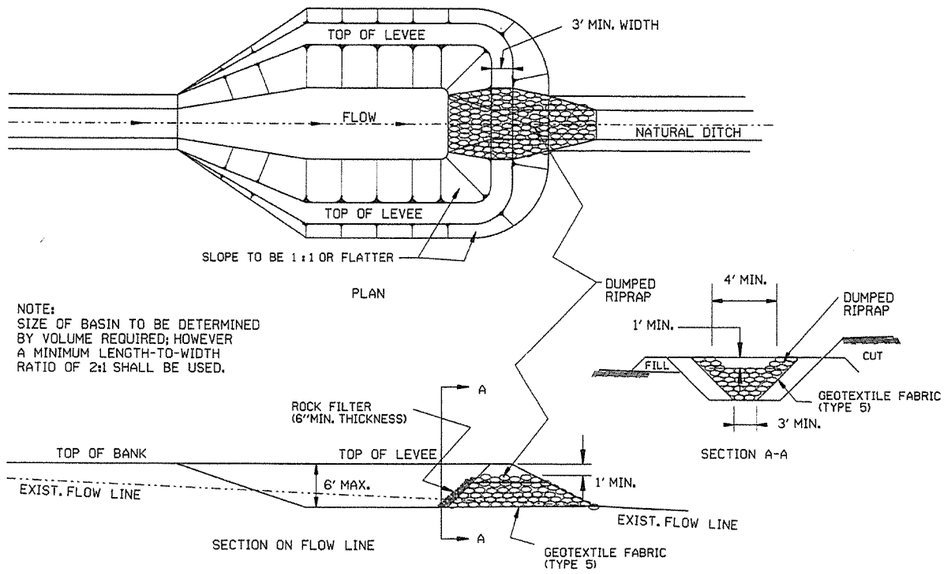

SEDIMENT BASIN WITH RIPRAP OUTLET (E-9)

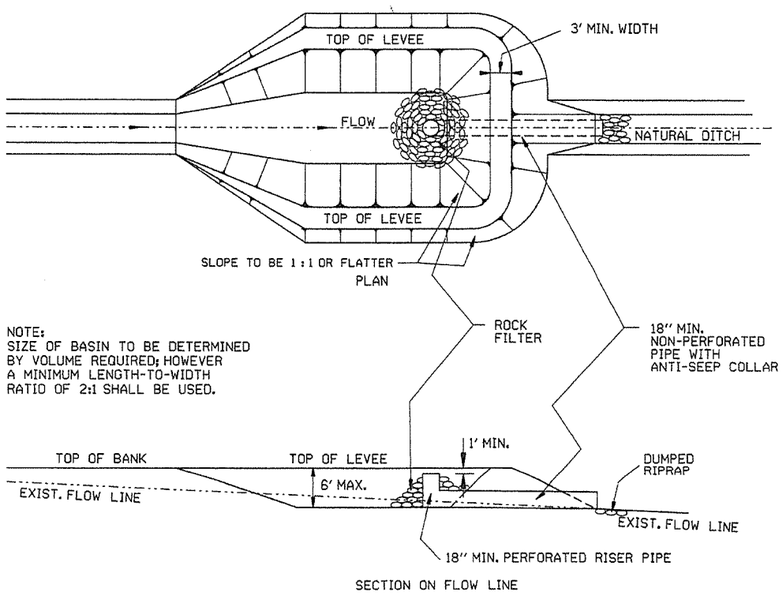

SEDIMENT BASIN WITH PIPE OUTLET (E-10)

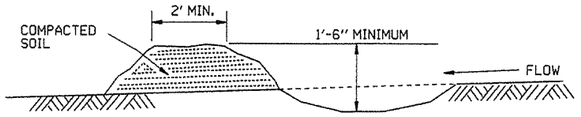

DIVERSION DITCH (E-8)

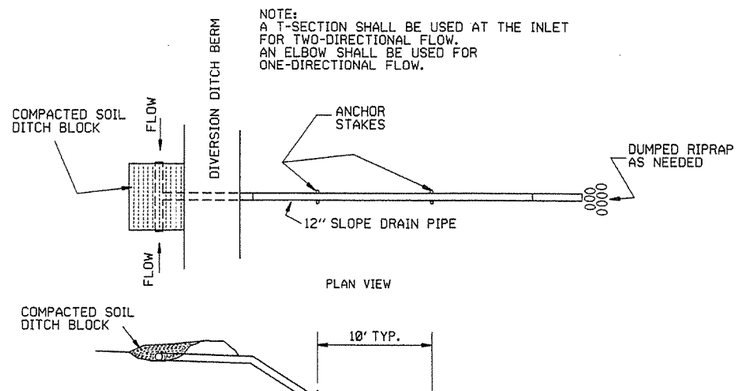

SLOPE DRAIN (E-12)

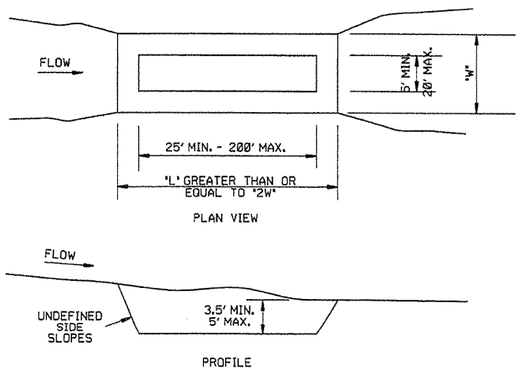

SEDIMENT BASIN (E-14)

DATE	REVISION	FILMED
6-2-94	Revised E-8 & E-12; Added E-14 & Deleted E-13	
4-1-93	ISSUED	

ARKANSAS STATE HIGHWAY COMMISSION

TEMPORARY EROSION CONTROL DEVICES

STANDARD DRAWING TEC-2

CLEARING AND GRUBBING

CONSTRUCTION SEQUENCE

1. PLACE PERIMETER CONTROLS (I.E. SILT FENCES , DIVERSION DITCHES, SEDIMENT BASINS, ETC.)
2. PERFORM CLEARING AND GRUBBING OPERATION.

EXCAVATION

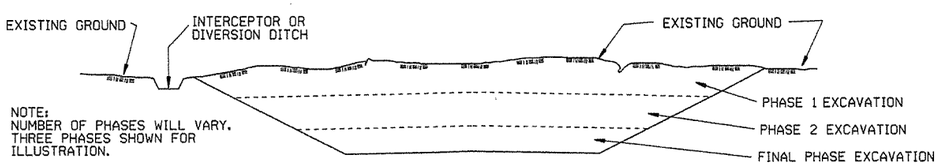

GENERAL NOTE

ALL CUT SLOPES SHALL BE DRESSED, PREPARED, SEEDED, AND MULCHED AS THE WORK PROGRESSES. SLOPES SHALL BE EXCAVATED AND STABILIZED IN EQUAL INCREMENTS NOT TO EXCEED 25 FEET, MEASURED VERTICALLY.

CONSTRUCTION SEQUENCE

1. EXCAVATE AND STABILIZE INTERCEPTOR AND/OR DIVERSION DITCHES.
2. PERFORM PHASE 1 EXCAVATION. PLACE PERMANENT OR TEMPORARY SEEDING.
3. PERFORM PHASE 2 EXCAVATION. PLACE PERMANENT OR TEMPORARY SEEDING.
4. PERFORM FINAL PHASE OF EXCAVATION. PLACE PERMANENT OR TEMPORARY SEEDING. STABILIZE DITCHES. CONSTRUCT DITCH CHECKS, DIVERSION DITCHES, SEDIMENT BASINS, OR OTHER EROSION CONTROL DEVICES AS REQUIRED.

EMBANKMENT

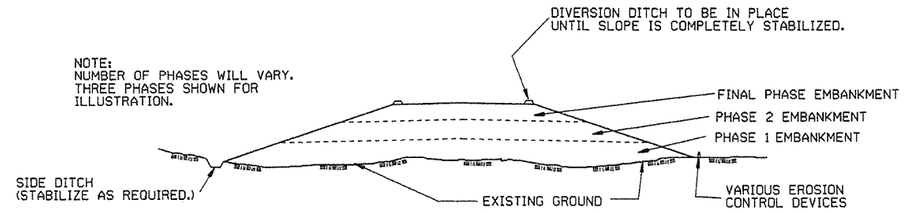

GENERAL NOTE

ALL EMBANKMENT SLOPES SHALL BE DRESSED, PREPARED, SEEDED, AND MULCHED AS THE WORK PROGRESSES. SLOPES SHALL BE CONSTRUCTED AND STABILIZED IN EQUAL INCREMENTS NOT TO EXCEED 25 FEET, MEASURED VERTICALLY.

CONSTRUCTION SEQUENCE

1. CONSTRUCT DIVERSION DITCHES, DITCH CHECKS, SEDIMENT BASINS, SILT FENCES, OR OTHER EROSION CONTROL DEVICES AS SPECIFIED.
2. PLACE PHASE 1 EMBANKMENT WITH PERMANENT OR TEMPORARY SEEDING. PROVIDE DIVERSION DITCHES AND SLOPE DRAINS IF EMBANKMENT CONSTRUCTION IS TO BE TEMPORARILY ABANDONED FOR A PERIOD OF GREATER THAN 21 DAYS.
3. PLACE PHASE 2 EMBANKMENT WITH PERMANENT OR TEMPORARY SEEDING. PROVIDE DIVERSION DITCHES AND SLOPE DRAINS IF EMBANKMENT CONSTRUCTION IS TO BE TEMPORARILY ABANDONED FOR A PERIOD OF GREATER THAN 21 DAYS.
4. PLACE FINAL PHASE OF EMBANKMENT WITH PERMANENT OR TEMPORARY SEEDING. PLACE DIVERSION DITCHES AND SLOPE DRAINS AND MAINTAIN UNTIL ENTIRE SLOPE IS STABILIZED.

DATE	REVISION	FILMED
11-03-94	CORRECTED SPELLING	
6-2-94	Drawn & Issued	6-2-94

ARKANSAS STATE HIGHWAY COMMISSION

TEMPORARY EROSION CONTROL DEVICES

STANDARD DRAWING TEC-3

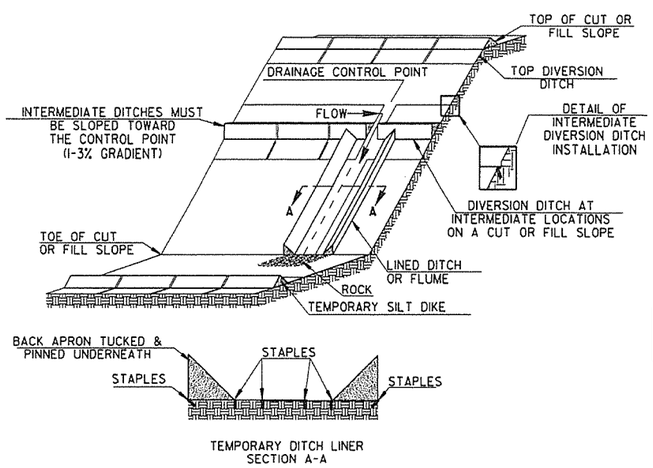

TRIANGULAR SILT DIKE INSTALLATION
FOR
DIVERSION DITCH AND/OR DITCH LINER

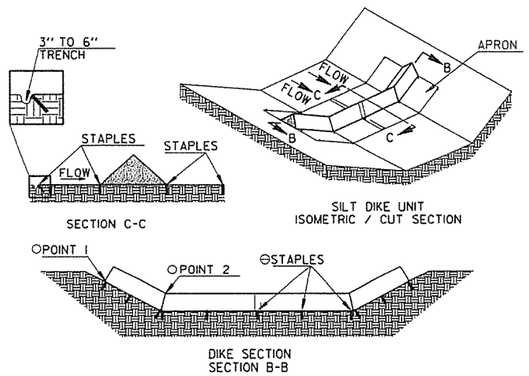

TRIANGULAR SILT DIKE INSTALLATION
FOR
ROADWAY DITCH OR DRAINAGE DITCH

○ POINT "1" MUST BE HIGHER THAN POINT "2" TO ENSURE THAT WATER FLOWS OVER THE DIKE AND NOT AROUND THE ENDS.

⊖ STAPLES SHALL BE PLACED WHERE THE UNITS OVERLAP AND IN THE CENTER OF THE UNIT AS SHOWN ON THE DIAGRAM.

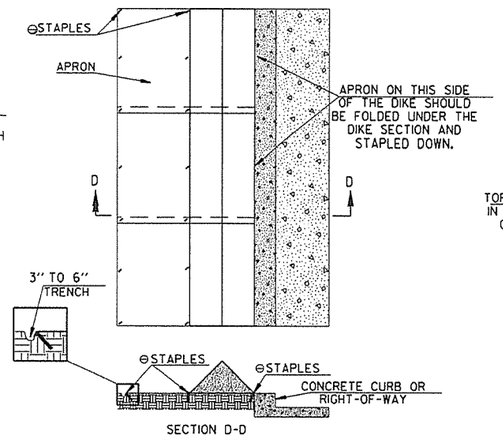

TRIANGULAR SILT DIKE INSTALLATION
FOR
CONTINUOUS BARRIER

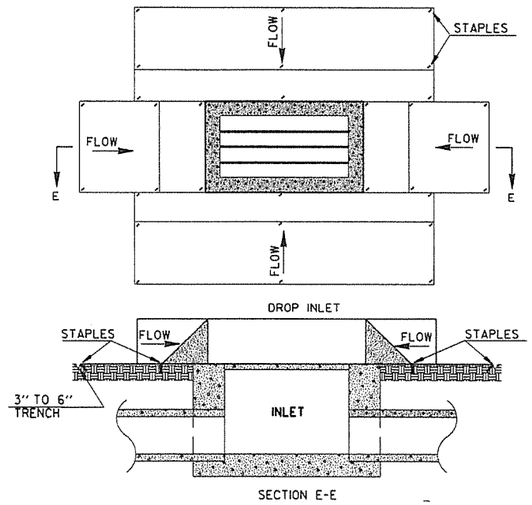

TRIANGULAR SILT DIKE INSTALLATION
FOR
DROP INLETS

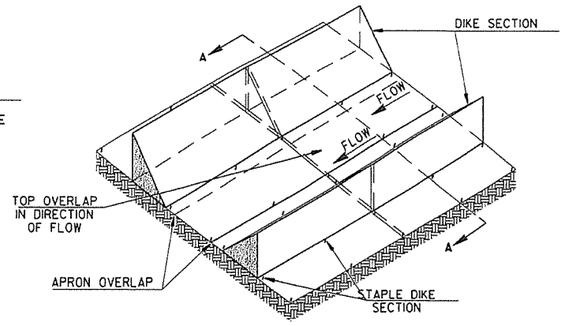

TRIANGULAR SILT DIKE INSTALLATION
FOR
TEMPORARY DITCH LINER

SYMBOLOGY
SYMBOL TO BE USED TO DENOTE DEVICE ON PLANS

NOTE: SILT DIKE SHOULD ONLY BE USED FOR DROP INLETS IN SUMP LOCATIONS.

GENERAL NOTES

1. THIS WORK SHALL CONSIST OF FURNISHING, INSTALLING, AND MAINTAINING THE TRIANGULAR SILT DIKE. THE DIKES SHALL BE USED AS A CONTINUOUS LINE BARRIER AT THE TOE OF SLOPE OR ACROSS THE ROADWAY DITCH TO CONTAIN SEDIMENT AND MINIMIZE EROSION, OR AS DIRECTED BY THE ENGINEER. THESE DIKES SHALL BE INSTALLED AND LOCATED AS SOON AS CONSTRUCTION WILL ALLOW OR AS DIRECTED BY THE ENGINEER.

2. TRIANGULAR SILT DIKE SHALL BE TRIANGULAR SHAPED HAVING A HEIGHT OF AT LEAST 8" TO 10" IN THE CENTER WITH EQUAL SIDES AND A 16" TO 20" BASE. THE TRIANGULAR SHAPED INNER MATERIAL SHALL BE URETHANE FOAM. THE OUTER COVER SHALL BE A WOVEN GEOTEXTILE FABRIC PLACED AROUND THE INNER MATERIAL & ALLOWED TO EXTEND BEYOND BOTH SIDES OF THE TRIANGLE 24" TO 36". THIS FABRIC SHOULD BE WILDEW RESISTANT, ROT-PROOF AND RESISTANT TO HEAT AND ULTRAVIOLET RADIATION MEETING REQUIREMENTS FOR SEDIMENT CONTROL IN AASHTO M288. THE DIKES SHALL BE ATTACHED TO THE GROUND WITH WIRE STAPLES. THE STAPLES SHALL BE NO. 11 GAUGE WIRE AND BE AT LEAST 6" TO 8" LONG. STAPLES SHALL BE PLACED AS SHOWN ON THESE DETAILS.

   THE CONTRACTOR SHALL INSPECT ALL DIKES AFTER EACH RAINFALL EVENT OF AT LEAST 0.5" OR GREATER. ANY DEFICIENCIES OR DAMAGE SHALL BE REPAIRED BY THE CONTRACTOR. ACCUMULATED SILT OR DEBRIS SHALL BE REMOVED AND RELOCATED AS DIRECTED BY THE ENGINEER. IF THE DIKES ARE DAMAGED OR INADVERTENTLY MOVED DURING THE SILT REMOVAL PROCESS, THE CONTRACTOR SHALL IMMEDIATELY REPLACE AFTER DAMAGE OCCURS.

3. ACCEPTED TRIANGULAR SILT DIKE, MEASURED AS PROVIDED ABOVE, WILL BE PAID FOR AT THE CONTRACT UNIT PRICE BID FOR TRIANGULAR SILT DIKE. PRICE BID WILL INCLUDE THE COST OF FURNISHING THE DIKES, INSTALLING, MAINTAINING AND REMOVAL WHEN DIRECTED BY THE ENGINEER.

DATE	REVISION	FILMED
7-26-12	REVISED GENERAL NOTE 2.	
12-15-11	ISSUED	

ARKANSAS STATE HIGHWAY COMMISSION

TEMPORARY EROSION CONTROL DEVICES

STANDARD DRAWING TEC-4

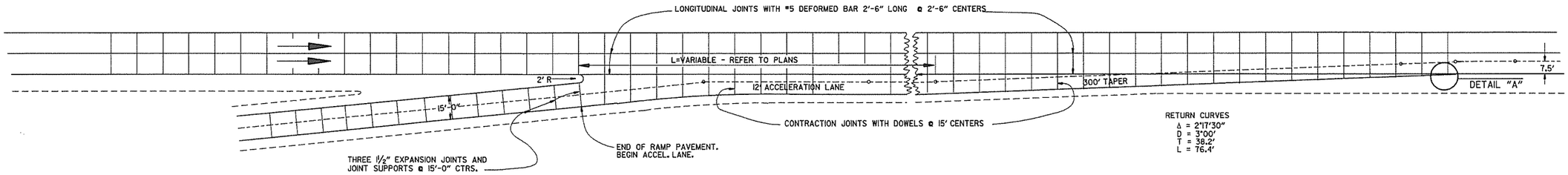

ENTRANCE RAMP

NOTE: JOINT SPACING ON THE MAIN LANES SHALL BE ADJUSTED AS NECESSARY TO CONFORM TO THESE JOINT LAYOUTS. THE MAIN LANE JOINT SPACING MAY BE REDUCED TO A 12' MINIMUM.

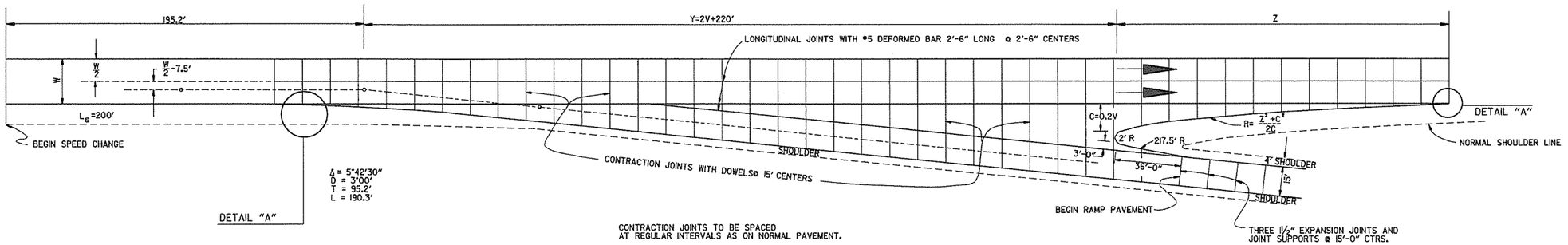

CONTRACTION JOINTS TO BE SPACED AT REGULAR INTERVALS AS ON NORMAL PAVEMENT.

EXIT RAMP

EXIT RAMP

DESIGN SPEED V	Y	NOSE OFFSET C	LENGTH NOSE TAPER Z	RETURN RADIUS R	ADDITIONAL SURFACING SQ. YDS.
40	300.0	8.0	96.0	580.0	602.43
50	320.0	10.0	120.0	725.0	687.29
60	340.0	12.0	168.0	1182.0	790.55
70	360.0	14.0	210.0	1582.0	902.27

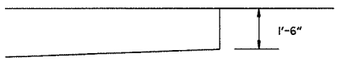

DETAIL "A"

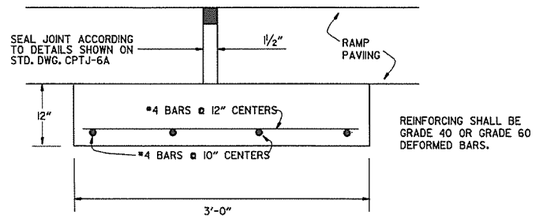

DETAIL OF EXPANSION JOINT & JOINT SUPPORT

NOTE: THE EXPANSION JOINTS SHALL BE MEASURED AND PAID FOR AS P.C.C. PAVEMENT (RAMP THICKNESS). WHEN RAMP PAVING IS ASPHALT, EXPANSION JOINT IS NOT REQUIRED.
THE JOINT SUPPORT MAY BE CONSTRUCTED WITH CLASS "A", "S", OR PAVING CONCRETE. PAYMENT FOR THE JOINT SUPPORT SHALL BE FOR THE CONTRACT UNIT PRICE BID FOR THE CLASS OF CONCRETE USED. ALL OTHER WORK AND MATERIALS REQUIRED FOR THE CONSTRUCTION OF THE JOINT SUPPORT SHALL BE INCLUDED IN THE PRICE BID FOR THE ABOVE ITEMS.

DATE	REVISION	DATE FILM'D
8-22-02	DELETED NOTE	
11-16-01	CORRECTED SPELLING ON ENTRANCE RAMP NOTE	
5-13-99	ADDED, EDITED AND DELETED NOTES	
11-03-94	ADDED NOTE RE: REINF. BARS	
10-1-92	ADDED DETAIL A & OTHER MINOR CHANGES	10-1-92
1-25-90	REVISED EXPANSION JOINT	1-25-90
7-15-88	CONFORM'D TO 1988 SPECIFICATIONS	65C-7-15-88
3-2-81	ISSUED	511-10-2-72

ARKANSAS STATE HIGHWAY COMMISSION

DETAILS OF STANDARD TURNOUT FOR ENTRANCE & EXIT RAMPS (NON-REINFORCED)

STANDARD DRAWING TR-1A

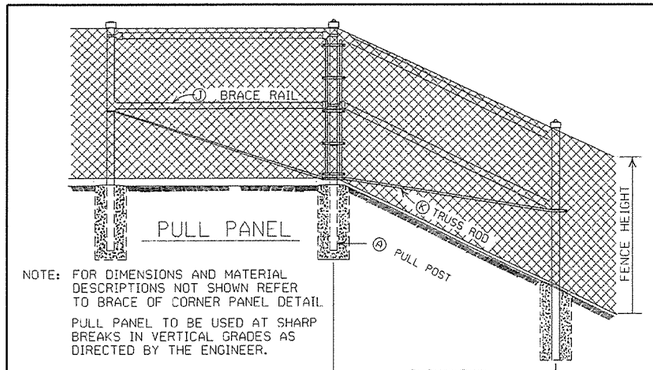

NOTE: FOR DIMENSIONS AND MATERIAL DESCRIPTIONS NOT SHOWN REFER TO BRACE OF CORNER PANEL DETAIL.

PULL PANEL TO BE USED AT SHARP BREAKS IN VERTICAL GRADES AS DIRECTED BY THE ENGINEER.

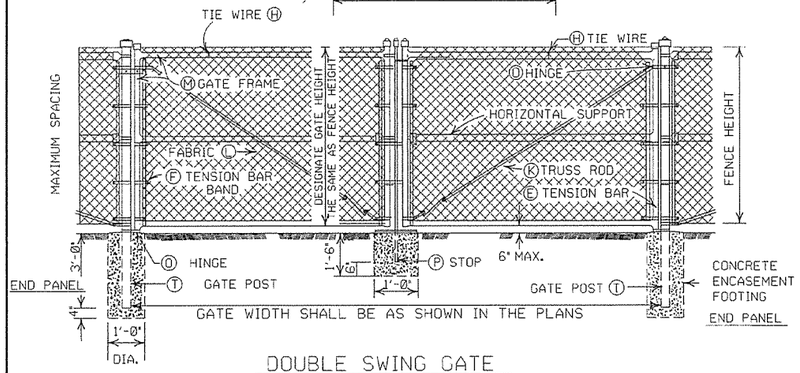

DOUBLE SWING GATE

POST SPACING DETAIL

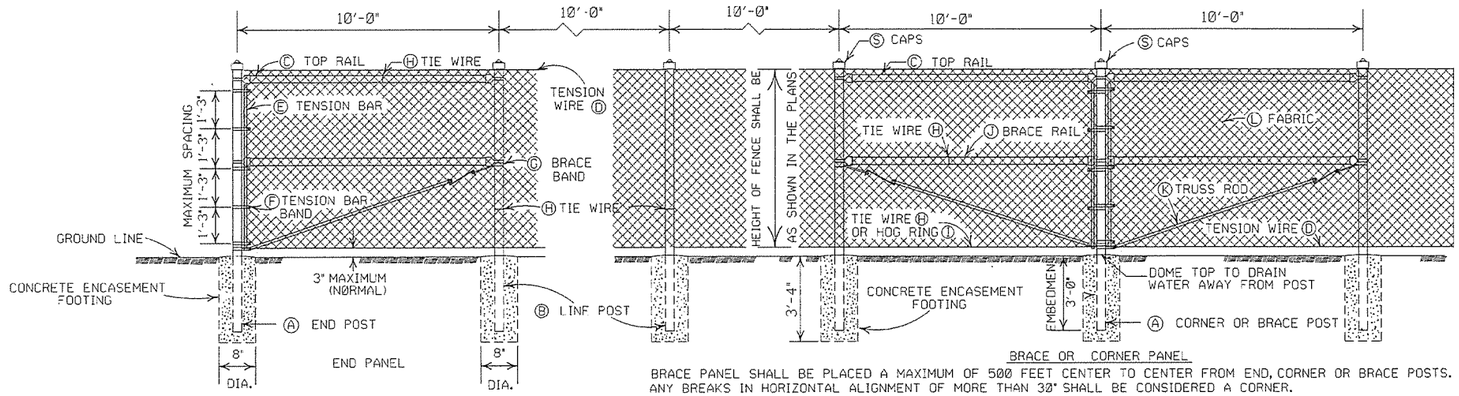

BRACE OR CORNER PANEL

BRACE PANEL SHALL BE PLACED A MAXIMUM OF 500 FEET CENTER TO CENTER FROM END, CORNER OR BRACE POSTS. ANY BREAKS IN HORIZONTAL ALIGNMENT OF MORE THAN 32" SHALL BE CONSIDERED A CORNER.

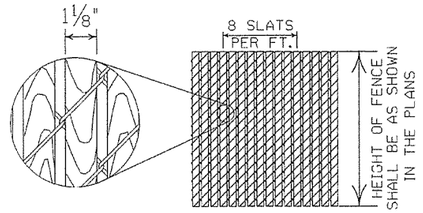

1⅛" X ¼" REDWOOD SLATS(LENGTH TO MATCH HEIGHT OF FENCE)

DETAIL OF REDWOOD SLAT INSTALLATION

(WHERE APPLICABLE)

GENERAL NOTES:

(C) CHAIN LINK FENCE BEING PLACED ON PRIVATE PROPERTY SHALL INCLUDE A TOP RAIL. ALL LABOR, MATERIALS, EQUIPMENT, TOOLS, AND INCIDENTALS NECESSARY TO COMPLETE THE WORK WILL BE PAID FOR AT THE CONTRACT UNIT PRICE BID PER LIN. FT. OF CHAIN LINK FENCE.

(D) TENSION WIRE: SHALL BE SECURED TO ALL TERMINAL, PULL, BRACE OR CORNER POSTS WITH TENSION BAR BANDS.

(J) BRACE RAIL: BRACE RAILS SHALL BE PROVIDED AT ALL TERMINAL, PULL, BRACE OR CORNER POSTS HALFWAY BETWEEN THE TOP RAIL AND GROUND LEVEL WHEN TOPRAIL IS SPECIFIED AND TWELVE INCHES (12") DOWN FROM TOP OF FABRIC WHEN TOP TENSION WIRE IS SPECIFIED. BRACE RAIL SHALL EXTEND FROM SUCH POST TO THE FIRST ADJACENT LINE POST.

(L) FABRIC: SHALL CONFORM TO THE SPECIFICATIONS.

(M) GATE FRAMES: SHALL BE CONSTRUCTED OF TUBULAR MEMBERS ASSEMBLED BY USE OF HEAVY PRESSED STEEL, MALLEABLE FITTINGS OR BY WELDING. ALL GATES SHALL HAVE ONE HORIZONTAL SUPPORT EXTENDING THE WIDTH OF THE GATE AT THE MIDPOINTS OF VERTICAL FRAME MEMBERS. THE COMPLETE FRAME SHALL BE RIGID AND HAVE AMPLE STRENGTH TO BE FREE FROM SAG AND TWIST.

(O) HINGES: SHALL BE OF HEAVY PATTERN, OF ADEQUATE STRENGTH FOR GATE, AND WITH LARGE BEARING SURFACES FOR CLAMPING IN POSITION. THE HINGE SHALL BE OF THE PROPER TYPE TO ALLOW FOR THE DESIGNATED DEGREE OF SWING. THE HINGE SHALL NOT TWIST OR TURN UNDER THE ACTION OF THE GATE. THE GATES SHALL BE CAPABLE OF BEING OPENED AND CLOSED EASILY BY ONE PERSON.

(P) LATCHES AND STOPS: SHALL BE PROVIDED FOR ALL GATES. GATES SHALL HAVE A DROP BAR LATCH. LATCHES SHALL BE ARRANGED FOR LOCKING. THE STOP FOR DROP BAR LATCHES SHALL BE SET IN CONCRETE AND ENGAGE THE PLUNGER OF THE BAR LATCH.

(S) CAPS: ALL POSTS, EXCEPT ROLL FORMED POSTS AND "T" POSTS SHALL BE CAPPED OVER THE EXTERIOR OF THE POST, AND SHALL CONFORM TO ASTM F626.

CONCRETE REQUIRED FOR THE EMBEDMENT OF ALL POSTS SHALL NOT BE PAID FOR DIRECTLY BUT SHALL BE INCLUDED IN THE CONTRACT UNIT PRICE BID FOR CHAIN LINK FENCE.

POSTS SHALL BE SPACED EQUIDISTANT ON A MAXIMUM OF 10' CENTERS.

EXCAVATION FOR POSTS: IN OTHER THAN ROCK SHALL BE OF THE DIMENSIONS INDICATED. IF ROCK IS ENCOUNTERED BEFORE REACHING THE REQUIRED DEPTH, THE EXCAVATION SHALL BE CONTINUED TO THE DEPTH INDICATED OR 1'-6" INTO THE ROCK, WHICHEVER IS LESS, AND SHALL BE A MINIMUM OF 8 INCHES IN DIAMETER.

HEIGHT OF FENCE FABRIC	(A) END, PULL CORNER OR BRACE POST	(B) LINE POSTS SIZE	(B) LINE POSTS TIE SPACING	(C) TOP RAIL SIZE	(C) TOP RAIL TIE SPACING	(C) TOP RAIL MIN. LENGTH	(D) TENSION WIRE SIZE	(D) TENSION WIRE TIE SPACING	(E) TENSION BAR SIZE	(E) TENSION BAR LENGTH	(F) TENSION BAR BAND SIZE	(F) TENSION BAR BAND BOLT SIZE	(F) TENSION BAR BAND SPACING	(G) BRACE BAND SIZE	(G) BRACE BAND BOLT SIZE
6' AND LESS	2½" O.D.	2" O.D.	1 TIE EVERY 1'-2" OF FABRIC HEIGHT	1⅝" O.D.	1 TIE EVERY 2'-0"	10'-0"	7 GAUGE COIL SPRING WIRE	1 TIE EVERY 1'-0"	MIN. OF ⅜" X ¾"	MIN. OF 2" LESS THAN FABRIC HEIGHT	MIN. OF ¾" X 0.074	⅝" X 1¼"	1 BAND AT TOP AND BOTTOM 15" MAX. INTERVAL BETWEEN BANDS	MIN. OF ¾" X 0.105	⅝" X 1¼"
OVER 6' TO 12' INCL.	3 " O.D.	2½" O.D.													

HEIGHT OF FENCE FABRIC	(H) TIE WIRE	(I) HOG RING	(J) BRACE RAIL SIZE	(J) BRACE RAIL TIE SPACING	(K) TRUSS ROD	(L) FABRIC SIZE	(L) FABRIC MESH	(L) FABRIC SELVAGE	(M) GATE FRAME SIZE	(M) GATE FRAME TIE SPACING	(N) HORIZONTAL SUPPORT SIZE	(N) HORIZONTAL SUPPORT TIE SPACING	(O) HINGE TYPE 180° SWING	(T) GATE POST GATE WIDTH 12' AND LESS	(T) GATE POST GATE WIDTH OVER 12' TO 24' INCL.
6' AND LESS	MIN. OF 12 GA. STEEL OR 9 GA. ALUM.	SAME GAUGE AS FABRIC	1⅝" O.D.	1 TIE EVERY 2'-0"	MIN. OF ⅜" ROUND WITH TIGHTNERS AND FITTINGS	9 GA.	2"	KNUCK -ING AND/OR TWIST -ING	2" O.D.	1 TIE EVERY 1'-0"	2" O.D.	1 TIE EVERY 1'-0"	OFFSET	3" O.D.	4" O.D.
OVER 5' TO 12' INCL.														4" O.D.	

NOTE: POST SIZES SHOWN ARE FOR STEEL. WHERE ALUMINUM IS PROVIDED, LINE POSTS SHALL HAVE AN OUT SIDE DIAMETER OF 2½" FOR FENCE HEIGHT OF 6' AND LESS, AN OUTSIDE DIAMETER OF 3" FOR FENCE HEIGHT OF 6' TO 12'. END, PULL, CORNER OR BRACE POSTS SHALL HAVE AN OUTSIDE DIAMETER OF 3" FOR FENCE HEIGHT OF 6' AND LESS; AN OUTSIDE DIAMETER OF 3½" FOR FENCE HEIGHTS OF 6' TO 12'. GATE POSTS WHERE GATE WIDTH IS 12' AND LESS SHALL HAVE AN OUTSIDE DIAMETER OF 3½" FOR FENCE HEIGHT OF 6' AND LESS. ALUMINUM TENSION WIRE SHALL BE 0.192" IN DIAMETER. MINIMUM THICKNESS OF MATERIAL FROM WHICH EXPANSION SLEEVES SHALL BE MADE WILL BE 0.078". POSTS AND RAILS MAY HAVE ANY CROSS-SECTIONAL SHAPE THAT WILL MEET THE SPECIFICATIONS.

OTHER DETAILS APPLY TO BOTH STEEL AND ALUMINUM FENCE.

ALL MISCELLANEOUS FITTINGS AND HARDWARE SHALL MEET THE REQUIREMENTS AND PRODUCTION TOLERANCES AS SET FORTH IN THE SPECIFICATIONS.
9 GAUGE ALUMINUM WIRE SHALL BE ACCEPTABLE FOR TIEING FABRIC TO TUBULAR AND ROLL FORMED MEMBERS OF STEEL FENCE.

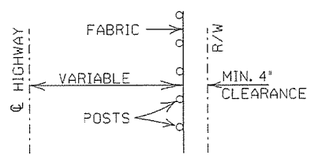

INSTALLATION MAY BE MODIFIED AS SHOWN IN THE PLANS

TYPICAL INSTALLATION DIAGRAM

POSTS AND RAILS

SIZE O.D.	GRADE 1 AND ALUMINUM ALLOY O.D. INCHES	WALL THICKNESS	LBS. PER LINEAR FT. STEEL	LBS. PER LINEAR FT. ALUMINUM	GRADE 2 O.D. INCHES	WALL THICKNESS	LBS. PER LINEAR FT.
1⅝	1.660	0.140	2.27	0.786	1.660	0.111	1.84
2	1.900	0.145	2.72	0.940	1.900	0.120	2.28
2½	2.375	0.154	3.65	1.264	2.375	0.130	3.11
3	2.875	0.203	5.79	2.004	2.875	0.160	4.64
3½	3.500	0.216	7.58	2.621	3.500	0.160	5.71
4	4.000	0.226	9.11	3.151	4.000	0.160	6.56

TOLERANCES ON DIMENSIONS AND WEIGHTS ACCORDING TO AASHTO M 181

DATE	REVISION	FILMED
11-17-10	REVISED TRUSS ROD	
12-10-09	REVISED POSTS & RAILS TABLE	
5-21-09	ADDED TABLE & GEN. NOTE (C)	
8-22-02	REVISED NOTES, REMOVED TABLE, & REMOVED FENCE ALTERNATE	
4-3-97	REVISED BRACE RAIL NOTE	
10-18-96	REVISED AASHTO & ASTM REF.	
11-3-94	REVISED NOTE (L)	
10-1-92	DELETED ALTERNATE POST	10-1-92
8-15-91	DELETED ROLL FORMED POST DETAIL & ADDED NOTE	8-15-91 8-15-91
11-30-89	DELETED CLASS CONCRETE	11-30-89
11-17-88	REVISED O.D. SIZES	668-11-17-88
10-30-87	GENERAL REVISIONS	548-10-30-87
4-20-79	REVISED TOP RAIL & TENSION WIRE	695-4-20-79
10-2-72	REVISED AND REDRAWN	530-10-2-72

ARKANSAS STATE HIGHWAY COMMISSION

CHAIN LINK FENCE

STANDARD DRAWING WF-3

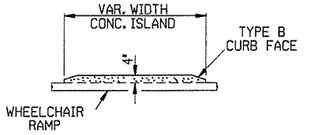

CONCRETE ISLAND DETAIL

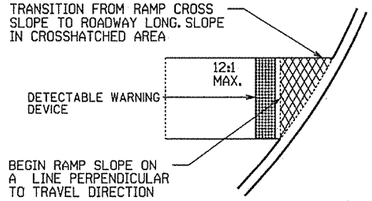

SLOPE TRANSITION DETAILS

TYPE 1 RAMP DIMENSIONS AND QUANTITIES

RADIUS "R" FEET	DISTANCE "X" FEET	DISTANCE "Y" FEET	LENGTH "L" FEET	RAMP AREA "A" SQ. YD.
15	11.67	18.82	32.18	26.21
20	11.52	22.26	35.46	30.07
25	11.43	26.60	38.77	33.80
30	11.37	30.26	40.93	36.90
35	11.33	33.51	43.11	39.77
40	11.30	36.45	45.26	42.45
45	11.27	39.16	47.34	44.97
50	11.25	41.69	49.36	47.35
55	11.24	44.07	51.31	49.63
60	11.22	46.33	53.21	51.80

GENERAL NOTES FOR DETECTABLE WARNING DEVICES

THE DETECTABLE WARNING DEVICE SHALL BE LOCATED SO THAT THE NEAREST EDGE OF THE DEVICE IS 6 TO 8 INCHES FROM THE FACE OF THE CURB.
TRUNCATED DOMES IN THE DETECTABLE WARNING SURFACE SHALL MEET THE REQUIREMENTS OF THE GEOMETRIC CONFIGURATION SHOWN.
DOMES SHALL BE ALIGNED ON A SQUARE GRID IN THE PREDOMINANT DIRECTION OF TRAVEL TO PERMIT WHEELS TO ROLL BETWEEN DOMES.
DETECTABLE WARNING DEVICE SHALL BE 24 INCHES IN THE DIRECTION OF TRAVEL AND EXTEND THE FULL WIDTH OF THE CURB RAMP OR FLUSH SURFACE.
DETECTABLE WARNING DEVICE SHALL BE ON THE AHTD QUALIFIED PRODUCTS LIST FOR CAST-IN-PLACE TACTILE PANELS (ADA DETECTABLE WARNING).

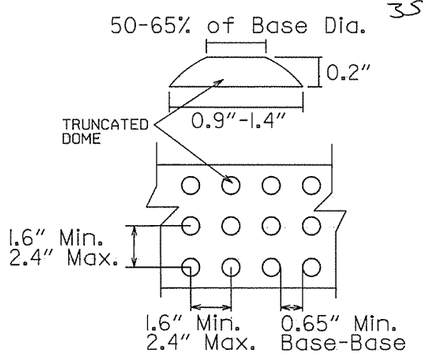

DETECTABLE WARNING DEVICE DETAIL

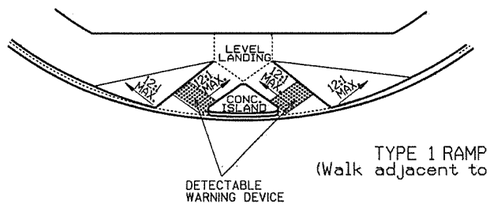

TYPE 1 RAMP
(Walk adjacent to curb)

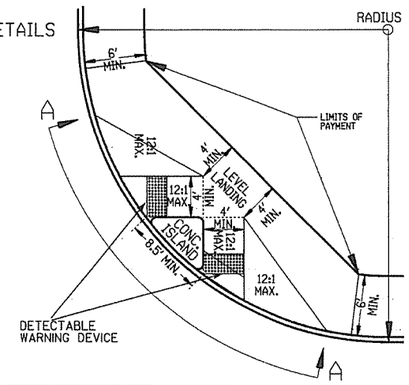

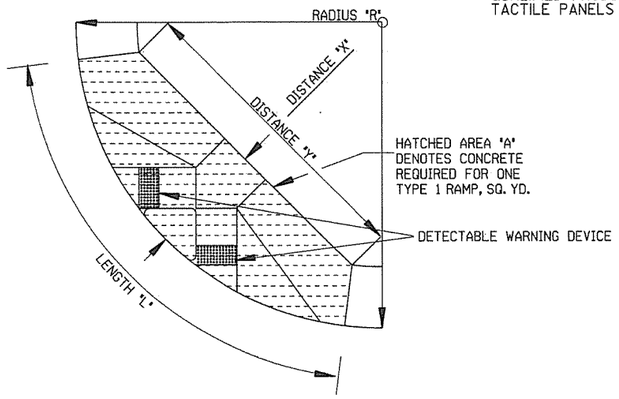



SECTION A-A

GENERAL NOTES:

IN NEW CONSTRUCTION, UNLESS OTHERWISE INDICATED ON THE PLANS, WHEELCHAIR RAMPS ARE TO BE PROVIDED AT ALL CORNERS OF CURBED STREET INTERSECTIONS AND MID-BLOCK CROSSWALK LOCATIONS.
IN ALTERATIONS WHEELCHAIR RAMPS ARE TO BE PROVIDED AT CURBED STREET INTERSECTIONS WITH PEDESTRIAN TRAFFIC AND MID-BLOCK CROSSWALK LOCATIONS.
THE LENGTH OF THE RAMP SHALL BE SUCH THAT THE SLOPE DOES NOT EXCEED 12:1. THE SURFACE TEXTURE OF THE RAMP SHALL CONFORM TO A CLASS 6 FINISH ACCORDING TO SECTION 802.19.
THE NORMAL GUTTER GRADE SHALL BE MAINTAINED THROUGH THE AREA OF THE RAMP.
ALL PAVEMENT MARKINGS SHALL BE IN ACCORDANCE WITH THE LATEST EDITION OF THE MANUAL OF UNIFORM TRAFFIC CONTROL DEVICES PUBLISHED BY THE FEDERAL HIGHWAY ADMINISTRATION.
THE MINIMUM THICKNESS OF THE RAMP, WALK, & LANDING SHALL BE 4".
THE MINIMUM WIDTH OF THE RAMPS SHALL BE THE WALK WIDTH OR 36", WHICHEVER IS GREATER.
RAMPS SHALL BE MODIFIED AS NECESSARY TO INSURE THAT THEY ARE PARALLEL TO A LINE DRAWN FROM THE CENTER OF ONE RAMP TO THE CENTER OF THE RAMP ON THE OPPOSITE SIDE OF THE INTERSECTION.
THE DIMENSIONS AND QUANTITIES SHOWN ON THIS DRAWING ARE FOR A 90° INTERSECTION ONLY. DIMENSIONS AND QUANTITIES FOR SKEWED INTERSECTIONS WILL VARY, AND ARE TO BE DETERMINED BY THE ENGINEER.

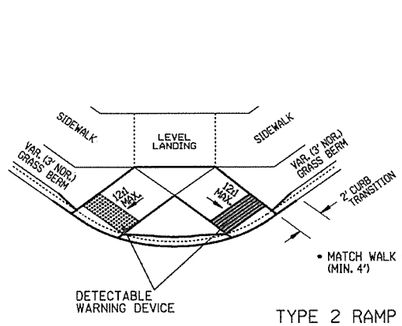

TYPE 2 RAMP

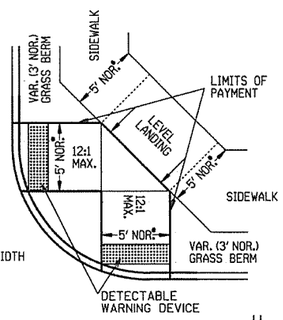

NOTE:
THE CROSS SLOPE OF THE RAMPS, LEVEL LANDINGS, AND SIDEWALKS SHALL NOT EXCEED 2.0% UNLESS REQUIRED TO MATCH STREET LONGTITUDINAL GRADE.

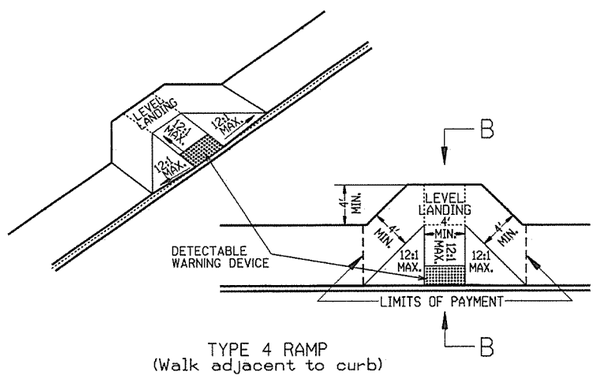

TYPE 4 RAMP
(Walk adjacent to curb)

RAMP SELECTION CRITERIA

FIRST CHOICE	TYPE 1	CORNER LOCATIONS WITH THE WALK ADJACENT TO THE CURB (BOTH NEW CONSTRUCTION AND ALTERATIONS).
	TYPE 2	CORNER LOCATIONS WITH THE WALK OFFSET FROM THE CURB A DISTANCE INSUFFICIENT TO ALLOW THE REQUIRED RAMP SLOPE (BOTH NEW CONSTRUCTION AND ALTERATIONS).
	TYPE 3	CORNER LOCATIONS WITH THE WALK OFFSET FROM THE CURB A DISTANCE SUFFICIENT TO ALLOW THE REQUIRED RAMP SLOPE (BOTH NEW CONSTRUCTION AND ALTERATIONS).
	TYPE 4	TANGENT LOCATIONS (BOTH NEW CONSTRUCTION AND ALTERATIONS).
SECOND CHOICE	TYPE 5	TANGENT LOCATIONS (ALTERATIONS ONLY).
THIRD CHOICE	TYPE 6	CORNER LOCATIONS (ALTERATIONS ONLY). THIS RAMP MAY BE USED ONLY IF THE TYPE 5 RAMPS CANNOT BE PLACED AT THE ENDS OF THE RADIUS.
FOURTH CHOICE		IF SITE CONSTRAINTS PREVENT THE CONSTRUCTION OF ANY OF THE TYPES LISTED, THEN AND ONLY THEN CAN THE 12:1 MAX. SLOPE ON THE RAMP BE EXCEEDED TO PROVIDE ACCESS TO THE STREET LEVEL (ALTERATIONS ONLY). THE SLOPE CAN BE STEEPENED TO A 10:1 MAX. FOR A MAX. LENGTH OF 5' OR A 8:1 MAX. FOR A MAX. LENGTH OF 2'. SLOPES STEEPER THAN 8:1 ARE NOT ALLOWED UNDER ANY CIRCUMSTANCES.

NOTE: IN ALTERATIONS, THE SELECTION OF THE TYPE OF WHEELCHAIR RAMP TO BE CONSTRUCTED SHALL BE BASED ON THE AMOUNT OF RIGHT-OF-WAY AVAILABLE, AND ON THE PRESENCE OF OTHER SITE CONSTRAINTS (UTILITIES, BUILDINGS, ETC.). THE TABLE ABOVE LISTS THE ORDER IN WHICH THE RAMPS ARE TO BE CONSIDERED.
AN ALTERATION IS DEFINED AS A PROJECT THAT CHANGES OR AFFECTS THE USE OF A PEDESTRIAN PATHWAY (OVERLAYS, SIGNALIZATION PROJECTS, ETC.) BUT DOES NOT REQUIRE THE PURCHASE OF ADDITIONAL RIGHT-OF-WAY. ALL PROJECTS THAT REQUIRE THE PURCHASE OF ADDITIONAL RIGHT-OF-WAY WILL USUALLY BE CONSIDERED NEW CONSTRUCTION FOR THE PURPOSES OF THE CHART ABOVE.

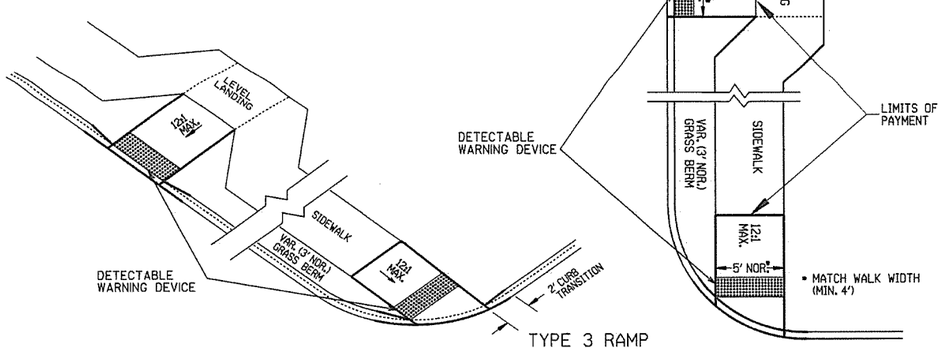

TYPE 3 RAMP

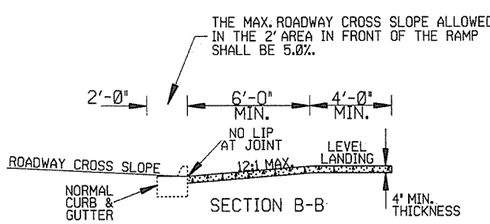

SECTION B-B

DATE	REVISION	DATE FILM
11-10-05	REVISED TO NEW SIDEWALK POLICY	
10-9-03	REVISED GEN. NOTES & ADDED NOTE	
4-10-03	REV. DETECTABLE WARNING DEVICES	
8-22-02	ADD DETECTABLE WARNING DEVICES	
3-30-00	ADD.SLOPE TRANS. & REV. ISL. DIMS.	
11-18-98	REVISED NOTES	
8-12-98	REVISED TEXTURE	
7-02-98	REDRAWN & REISSUED	
10-18-96	CORRECTED DIMENSIONS	10-18-96
5-24-90	FROM8:1TO12:MAX.SLOPES	5-24-90
7-15-88	ADJUSTED MAX. SLOPE	652-7-15-88
7-14-88	INCLUD."CONC. ISLD."IN PAY ITEM	-------
6-02-76	ISSUED-P.H.D.	299-7-28-76

ARKANSAS STATE HIGHWAY COMMISSION

WHEELCHAIR RAMPS
NEW CONSTRUCTION
AND ALTERATIONS

STANDARD DRAWING WR-1

RESHOT 3-5-93

FED. ROAD No.	STATE	FED. AID PROJECT	FISCAL YEAR	SHEET No.	TOTAL SHEETS
6	ARK.			360	
JOB No.					

BAR LIST FOR VARIOUS SECTIONS OF BARREL

SECTION & BAR GROUP	LENGTHS OF SECTION	DEPTH OF COVER	CLEAR SPANS	CLEAR HEIGHT	"a" bars — STRAIGHT — In Top and Bottom Slab of Barrel & Fold in Apron and Headwall - Each: SIZE	SPACING	NUMBER REQ'D 3:1	NUMBER REQ'D 4:1	LENGTH
SECTION "A" & BAR GROUP "A"	3:1 = 22'-0"	0' TO 10'-0"	2 @ 8'	5'	#5	12"	46	66	17'-8"
				6'			46	66	17'-8"
				7'			46	66	17'-10"
				8'			46	66	17'-11"
				9'			46	66	18'-0"
				10'			46	66	18'-5"
				11'			48	68	21'-10"
				12'			48	68	21'-10"
			2 @ 10'	5'	#5	12"	48	68	21'-10"
				6'			48	68	21'-10"
				7'			48	68	21'-11"
				8'			48	68	22'-3"
				9'			48	68	22'-5"
				10'			48	68	22'-5"
				11'			48	68	22'-7"
				12'			48	68	22'-9"
			2 @ 12'	5'	#5	11"	52	74	25'-1"
				6'			52	74	25'-1"
				7'			52	74	25'-1"
				8'			52	74	25'-1"
				9'			52	74	26'-2"
				10'			52	74	26'-2"
				11'			52	74	26'-3"
				12'			52	74	26'-9"
SECTION "B" & BAR GROUP "B"	3:1 = 16'-0"	0' TO 15'-0"	2 @ 6'	5'	#5	12"	22	32	17'-8"
				6'			22	32	17'-8"
				7'			22	32	17'-10"
				8'			22	32	18'-2"
				9'			22	32	18'-5"
				10'			22	32	18'-5"
			2 @ 8'	6'	#7	12"	22	32	21'-10"
				7'			22	32	21'-10"
				8'			22	32	21'-11"
				9'			22	32	22'-1"
				10'			22	32	22'-5"
				11'			22	32	22'-7"
				12'			22	32	22'-9"
			2 @ 10'	6'	#7	12"	20	30	25'-11"
				7'			20	30	26'-0"
				8'			20	30	26'-11"
				9'			20	30	26'-11"
				10'			20	30	26'-5"
				11'			20	30	26'-7"
				12'			20	30	26'-9"
SECTION "C" & BAR GROUP "C"	3:1 = 11'-0"	10'-0" TO 15'-0"	2 @ 6'	5'	#5	12"	22	32	17'-8"
				6'			22	32	17'-8"
				7'			22	32	17'-10"
				8'			22	32	17'-11"
				9'			22	32	18'-2"
				10'			22	32	18'-5"
				11'			22	32	18'-5"
				12'			22	32	18'-5"
			2 @ 8'	6'	#7	12"	20	30	21'-10"
				7'			20	30	21'-11"
				8'			20	30	22'-0"
				9'			20	30	22'-3"
				10'			20	30	22'-5"
				11'			20	30	22'-7"
				12'			20	30	22'-9"
			2 @ 10'	6'	#7	12"	24	34	25'-11"
				7'			24	34	26'-0"
				8'			24	34	26'-11"
				9'			24	34	26'-3"
				10'			24	34	26'-5"
				11'			24	34	26'-7"
				12'			24	34	26'-9"
SECTION "D" & BAR GROUP "D"	Varies with Length of Barrel	20'-0" TO 25'-0"	2 @ 6'	5'	#5	11"	Varies with length of Barrel.		17'-8"
				6'					17'-9"
				7'					18'-0"
				8'					18'-1"
				9'					18'-5"
				10'					18'-7"
			2 @ 8'	6'	#6	12"			21'-10"
				7'					22'-0"
				8'					22'-1"
				9'					22'-6"
				10'					22'-7"
				11'					22'-9"
				12'					22'-10"
			2 @ 10'	6'	#6	10"			25'-11"
				7'					26'-0"
				8'					26'-5"
				9'					26'-7"
				10'					26'-9"
				11'					26'-9"
				12'					26'-11"

NOTE:- Bars for each Section to be marked with the Section letter, thus for Section B, the bars should be marked Ba, Bb, Bc, Bd, Be and Bf.

Designed by:- W.C. Haigh 6-25-62 Checked by:- R.H.S. 7-16-62
Detailed by:- W.C. Haigh 7-6-62 Checked by:- R.H.S. 7-20-62
Drawn by:- W.C. Haigh 7-5-62 Checked by:- R.H.S. 7-19-62
Quantities by:- W.C. Haigh 7-9-62

BAR LIST FOR VARIOUS SECTIONS OF BARREL

SECTION & BAR GROUP	LENGTHS OF SECTION	DEPTH OF COVER	CLEAR SPANS	CLEAR HEIGHT	"b" bars — BENT - See Diagram below. In Bottom of Top Slab bent up over Division Wall - hooked. Alternate with "a" and "c" bars. SIZE	SPACING	NUMBER REQ'D 3:1	NUMBER REQ'D 4:1	LENGTH	X	Y	Z
SECTION "A" & BAR GROUP "A"	3:1 = 22'-0"	0' TO 10'-0"	2 @ 8'	5'	#5	12"	20	29	19'-1"	0'-5 3/8"	3'-8"	6'-6"
				6'			20	29	19'-1"	0'-5 3/8"	3'-9"	6'-6"
				7'			20	29	19'-3"	0'-5 3/8"	3'-9"	6'-6 1/2"
				8'			20	29	19'-4"	0'-5 3/8"	3'-10"	6'-7"
				9'			20	29	19'-4"	0'-5 3/8"	3'-10"	6'-7"
				10'			20	29	19'-5"	0'-5 3/8"	3'-11"	6'-8"
				11'			22	32	23'-0"	0'-7"	4'-2"	7'-11 1/2"
				12'			22	32	23'-1"	0'-7"	4'-2"	7'-11 1/2"
			2 @ 10'	5'	#5	12"	22	32	23'-5"	0'-7"	4'-2"	8'-0"
				6'			22	32	23'-5"	0'-7"	4'-2"	8'-0"
				7'			22	32	23'-7"	0'-7"	4'-2"	8'-0"
				8'			22	32	23'-8"	0'-7"	4'-2"	8'-0"
				9'			22	32	23'-9"	0'-7"	4'-2"	8'-1"
				10'			22	32	24'-0"	0'-7"	4'-2"	8'-2"
				11'			22	32	24'-1"	0'-7"	4'-2"	8'-2"
				12'			22	32	24'-3"	0'-7"	4'-2"	8'-3"
			2 @ 12'	5'	#5	11"	24	35	27'-9"	0'-7 3/8"	4'-11"	9'-5"
				6'			24	35	27'-9"	0'-7 3/8"	4'-11"	9'-5"
				7'			24	35	27'-11"	0'-7 3/8"	4'-11"	9'-6"
				8'			24	35	27'-11"	0'-7 3/8"	4'-11"	9'-6"
				9'			24	35	28'-1"	0'-7 3/8"	4'-11"	9'-6"
				10'			24	35	28'-2"	0'-7 3/8"	4'-11"	9'-7"
				11'			24	35	28'-3"	0'-7 3/8"	4'-11"	9'-7"
				12'			24	35	28'-5"	0'-7 3/8"	4'-11"	9'-8"
SECTION "B" & BAR GROUP "B"	3:1 = 16'-0"	0' TO 15'-0"	2 @ 6'	5'	#5	12"	11	16	19'-3"	0'-7"	3'-5"	6'-6"
				6'			11	16	19'-3"	0'-7"	3'-5"	6'-6"
				7'			11	16	19'-5"	0'-7"	3'-5"	6'-6 1/2"
				8'			11	16	19'-6"	0'-7"	3'-5"	6'-7"
				9'			11	16	19'-8"	0'-7"	3'-6"	6'-8"
				10'			11	16	19'-9"	0'-7"	3'-6"	6'-8"
			2 @ 8'	6'	#7	12"	11	16	22'-3"	0'-8"	4'-0"	7'-11 1/2"
				7'			11	16	22'-4"	0'-8"	4'-0"	7'-11 1/2"
				8'			11	16	22'-6"	0'-8"	4'-0"	8'-0"
				9'			11	16	22'-7"	0'-8"	4'-0"	8'-0"
				10'			11	16	22'-9"	0'-8"	4'-0"	8'-1"
				11'			11	16	22'-10"	0'-8"	4'-0"	8'-1"
				12'			11	16	23'-0"	0'-8"	4'-0"	8'-2"
			2 @ 10'	6'	#7	12"	15	21	28'-6"	0'-9"	5'-1"	9'-1"
				7'			15	21	28'-8"	0'-9"	5'-1"	9'-1"
				8'			15	21	28'-10"	0'-9"	5'-1"	9'-2"
				9'			15	21	29'-0"	0'-9"	5'-1"	9'-2"
				10'			15	21	29'-1"	0'-9"	5'-1"	9'-3"
				11'			15	21	29'-3"	0'-9"	5'-1"	9'-3"
				12'			15	21	29'-5"	0'-9"	5'-1"	9'-4"
SECTION "C" & BAR GROUP "C"	3:1 = 11'-0"	10'-0" TO 15'-0"	2 @ 6'	5'	#5	12"	11	16	19'-3"	0'-8"	3'-5"	6'-6"
				6'			11	16	19'-3"	0'-8"	3'-5"	6'-6"
				7'			11	16	19'-5"	0'-8"	3'-5"	6'-6"
				8'			11	16	19'-6"	0'-8"	3'-5"	6'-7"
				9'			11	16	19'-8"	0'-8"	3'-6"	6'-8"
				10'			11	16	19'-9"	0'-8"	3'-6"	6'-8"
				11'			11	16	20'-0"	0'-8"	3'-6"	6'-9"
				12'			11	16	20'-1"	0'-8"	3'-6"	6'-9"
			2 @ 8'	6'	#7	12"	15	21	28'-6"	0'-9"	5'-1"	9'-1"
				7'			15	21	28'-8"	0'-9"	5'-1"	9'-1"
				8'			15	21	28'-10"	0'-9"	5'-1"	9'-2"
				9'			15	21	29'-0"	0'-9"	5'-1"	9'-2"
				10'			15	21	29'-1"	0'-9"	5'-1"	9'-3"
				11'			15	21	29'-3"	0'-9"	5'-1"	9'-3"
				12'			15	21	29'-5"	0'-9"	5'-1"	9'-4"
			2 @ 10'	6'	#7	12"	19	27	34'-0"	0'-10"	6'-0"	10'-9"
				7'			19	27	34'-2"	0'-10"	6'-0"	10'-9"
				8'			19	27	34'-3"	0'-10"	6'-0"	10'-10"
				9'			19	27	34'-5"	0'-10"	6'-0"	10'-10"
				10'			19	27	34'-6"	0'-10"	6'-0"	10'-11"
				11'			19	27	34'-8"	0'-10"	6'-0"	10'-11"
				12'			19	27	34'-9"	0'-10"	6'-0"	11'-0"
SECTION "D" & BAR GROUP "D"	Varies with Length of Barrel	20'-0" TO 25'-0"	2 @ 6'	5'	#5	11"	Varies with length of Barrel.		19'-4"	0'-9 3/8"	3'-11"	6'-6"
				6'					19'-5"	0'-9 3/8"	3'-11"	6'-6"
				7'					19'-7"	0'-9 3/8"	3'-11"	6'-6 1/2"
				8'					19'-8"	0'-9 3/8"	3'-11"	6'-7"
				9'					19'-9"	0'-9 3/8"	3'-11"	6'-8"
				10'					20'-0"	0'-9 3/8"	3'-11"	6'-8"
			2 @ 8'	6'	#6	12"			24'-5"	0'-10 3/8"	4'-10"	8'-0"
				7'					24'-6"	0'-10 3/8"	4'-10"	8'-0"
				8'					24'-8"	0'-10 3/8"	4'-10"	8'-1"
				9'					24'-9"	0'-10 3/8"	4'-10"	8'-2"
				10'					24'-11"	0'-10 3/8"	4'-10"	8'-2"
				11'					25'-0"	0'-10 3/8"	4'-10"	8'-3"
				12'					25'-2"	0'-10 3/8"	4'-10"	8'-3"
			2 @ 10'	6'	#6	10"			28'-3"	0'-11 3/8"	5'-8"	9'-4"
				7'					28'-4"	0'-11 3/8"	5'-8"	9'-4"
				8'					28'-6"	0'-11 3/8"	5'-8"	9'-5"
				9'					28'-7"	0'-11 3/8"	5'-8"	9'-5"
				10'					28'-9"	0'-11 3/8"	5'-8"	9'-6"
				11'					28'-11"	0'-11 3/8"	5'-8"	9'-6"
				12'					29'-0"	0'-11 3/8"	5'-8"	9'-7"

SECTION & BAR GROUP	LENGTHS OF SECTION	DEPTH OF COVER	CLEAR SPANS	CLEAR HEIGHT	"b2" bars — BENT - See Diagram below. In Top of Bottom Slab, bent down under Division Wall - hooked. Alternate with "a" and "c" bars. SIZE	SPACING	NUMBER REQ'D 3:1	NUMBER REQ'D 4:1	LENGTH	X	Y	Z
SECTION "A" & BAR GROUP "A"	3:1 = 22'-0"	0' TO 10'-0"	2 @ 8'	5'	#6	13"	20	29	19'-2"	0'-6 5/8"	3'-7"	6'-6"
				6'			20	29	19'-2"	0'-6 5/8"	3'-7"	6'-6"
				7'			20	29	19'-3"	0'-6 5/8"	3'-8"	6'-6 1/2"
				8'			20	29	19'-4"	0'-6 5/8"	3'-8"	6'-7"
				9'			20	29	19'-4"	0'-6 5/8"	3'-8"	6'-7"
				10'			20	29	19'-5"	0'-6 5/8"	3'-9"	6'-8"
				11'			22	32	23'-0"	0'-8"	4'-6"	7'-11 1/2"
				12'			22	32	23'-1"	0'-8"	4'-6"	7'-11 1/2"
			2 @ 10'	5'	#6	12"	22	32	23'-5"	0'-8"	4'-6"	8'-0"
				6'			22	32	23'-5"	0'-8"	4'-6"	8'-0"
				7'			22	32	23'-7"	0'-8"	4'-6"	8'-0"
				8'			22	32	23'-8"	0'-8"	4'-6"	8'-0"
				9'			22	32	23'-9"	0'-8"	4'-7"	8'-1"
				10'			22	32	24'-0"	0'-8"	4'-8"	8'-2"
				11'			22	32	24'-1"	0'-8"	4'-8"	8'-2"
				12'			22	32	24'-3"	0'-8"	4'-8"	8'-3"
			2 @ 12'	5'	#6	11"	24	35	27'-9"	0'-9"	5'-5"	9'-5"
				6'			24	35	27'-9"	0'-9"	5'-5"	9'-5"
				7'			24	35	27'-11"	0'-9"	5'-5"	9'-6"
				8'			24	35	27'-11"	0'-9"	5'-5"	9'-6"
				9'			24	35	28'-1"	0'-9"	5'-5"	9'-6"
				10'			24	35	28'-2"	0'-9"	5'-5"	9'-7"
				11'			24	35	28'-3"	0'-9"	5'-5"	9'-7"
				12'			24	35	28'-5"	0'-9"	5'-5"	9'-8"
SECTION "B" & BAR GROUP "B"	3:1 = 16'-0"	0' TO 15'-0"	2 @ 6'	5'	#6	12"	11	16	19'-3"	0'-7 1/4"	3'-6"	6'-6"
				6'			11	16	19'-3"	0'-7 1/4"	3'-6"	6'-6"
				7'			11	16	19'-5"	0'-7 1/4"	3'-6"	6'-6"
				8'			11	16	19'-6"	0'-7 1/4"	3'-6"	6'-7"
				9'			11	16	19'-8"	0'-7 1/4"	3'-6"	6'-8"
				10'			11	16	19'-9"	0'-7 1/4"	3'-6"	6'-8"
			2 @ 8'	6'	#7	12"	11	16	22'-3"	0'-8 1/4"	4'-0"	7'-11 1/2"
				7'			11	16	22'-4"	0'-8 1/4"	4'-0"	7'-11 1/2"
				8'			11	16	22'-6"	0'-8 1/4"	4'-0"	8'-0"
				9'			11	16	22'-7"	0'-8 1/4"	4'-0"	8'-0"
				10'			11	16	22'-9"	0'-8 1/4"	4'-0"	8'-1"
				11'			11	16	22'-10"	0'-8 1/4"	4'-0"	8'-1"
				12'			11	16	23'-0"	0'-8 1/4"	4'-0"	8'-2"
			2 @ 10'	6'	#7	12"	15	21	28'-6"	0'-9 1/4"	5'-1"	9'-1"
				7'			15	21	28'-8"	0'-9 1/4"	5'-1"	9'-1"
				8'			15	21	28'-10"	0'-9 1/4"	5'-1"	9'-2"
				9'			15	21	29'-0"	0'-9 1/4"	5'-1"	9'-2"
				10'			15	21	29'-1"	0'-9 1/4"	5'-1"	9'-3"
				11'			15	21	29'-3"	0'-9 1/4"	5'-1"	9'-3"
				12'			15	21	29'-5"	0'-9 1/4"	5'-1"	9'-4"
SECTION "C" & BAR GROUP "C"	3:1 = 11'-0"	10'-0" TO 15'-0"	2 @ 6'	5'	#6	12"	11	16	19'-3"	0'-8 1/4"	3'-6"	6'-6"
				6'			11	16	19'-3"	0'-8 1/4"	3'-6"	6'-6"
				7'			11	16	19'-5"	0'-8 1/4"	3'-6"	6'-6"
				8'			11	16	19'-6"	0'-8 1/4"	3'-6"	6'-7"
				9'			11	16	19'-8"	0'-8 1/4"	3'-6"	6'-8"
				10'			11	16	19'-9"	0'-8 1/4"	3'-6"	6'-8"
				11'			11	16	20'-0"	0'-8 1/4"	3'-6"	6'-9"
				12'			11	16	20'-1"	0'-8 1/4"	3'-6"	6'-9"
			2 @ 8'	6'	#8	13"	15	21	28'-6"	0'-9 1/4"	5'-1"	9'-1"
				7'			15	21	28'-8"	0'-9 1/4"	5'-1"	9'-1"
				8'			15	21	28'-10"	0'-9 1/4"	5'-1"	9'-2"
				9'			15	21	29'-0"	0'-9 1/4"	5'-1"	9'-2"
				10'			15	21	29'-1"	0'-9 1/4"	5'-1"	9'-3"
				11'			15	21	29'-3"	0'-9 1/4"	5'-1"	9'-3"
				12'			15	21	29'-5"	0'-9 1/4"	5'-1"	9'-4"
			2 @ 10'	6'	#8	13"	19	27	34'-0"	0'-10 1/4"	6'-0"	10'-9"
				7'			19	27	34'-2"	0'-10 1/4"	6'-0"	10'-9"
				8'			19	27	34'-3"	0'-10 1/4"	6'-0"	10'-10"
				9'			19	27	34'-5"	0'-10 1/4"	6'-0"	10'-10"
				10'			19	27	34'-6"	0'-10 1/4"	6'-0"	10'-11"
				11'			19	27	34'-8"	0'-10 1/4"	6'-0"	10'-11"
				12'			19	27	34'-9"	0'-10 1/4"	6'-0"	11'-0"
SECTION "D" & BAR GROUP "D"	Varies with Length of Barrel	20'-0" TO 25'-0"	2 @ 6'	5'	#6	11"	Varies with length of Barrel.		19'-4"	0'-9 3/8"	3'-11"	6'-6"
				6'					19'-5"	0'-9 3/8"	3'-11"	6'-6"
				7'					19'-7"	0'-9 3/8"	3'-11"	6'-6 1/2"
				8'					19'-8"	0'-9 3/8"	3'-11"	6'-7"
				9'					19'-9"	0'-9 3/8"	3'-11"	6'-8"
				10'					20'-0"	0'-9 3/8"	3'-11"	6'-8"
			2 @ 8'	6'	#8	12"			24'-5"	0'-10 3/8"	4'-10"	8'-0"
				7'					24'-6"	0'-10 3/8"	4'-10"	8'-0"
				8'					24'-8"	0'-10 3/8"	4'-10"	8'-1"
				9'					24'-9"	0'-10 3/8"	4'-10"	8'-2"
				10'					24'-11"	0'-10 3/8"	4'-10"	8'-2"
				11'					25'-0"	0'-10 3/8"	4'-10"	8'-3"
				12'					25'-2"	0'-10 3/8"	4'-10"	8'-3"
			2 @ 10'	6'	#8	10"			28'-3"	0'-11 3/8"	5'-8"	9'-4"
				7'					28'-4"	0'-11 3/8"	5'-8"	9'-4"
				8'					28'-6"	0'-11 3/8"	5'-8"	9'-5"
				9'					28'-7"	0'-11 3/8"	5'-8"	9'-5"
				10'					28'-9"	0'-11 3/8"	5'-8"	9'-6"
				11'					28'-11"	0'-11 3/8"	5'-8"	9'-6"
				12'					29'-0"	0'-11 3/8"	5'-8"	9'-7"

SECTION & BAR GROUP	LENGTHS OF SECTION	DEPTH OF COVER	CLEAR SPANS	CLEAR HEIGHT	"c" bars — STRAIGHT — In Top and Bottom Slab of Barrel. Alternate with "b" and "b2" bars. SIZE	SPACING	NUMBER REQ'D 3:1	NUMBER REQ'D 4:1	LENGTH
SECTION "A" & BAR GROUP "A"	3:1 = 22'-0"	0' TO 10'-0"	2 @ 8'	5'	#7	13"	20	29	19'-2"
				6'			20	29	19'-2"
				7'			20	29	19'-3"
				8'			20	29	19'-4"
				9'			20	29	19'-4"
				10'			20	29	19'-5"
				11'			22	32	23'-0"
				12'			22	32	23'-1"
			2 @ 10'	5'	#7	13"	22	32	23'-5"
				6'			22	32	23'-5"
				7'			22	32	23'-7"
				8'			22	32	23'-8"
				9'			22	32	23'-9"
				10'			22	32	24'-0"
				11'			22	32	24'-1"
				12'			22	32	24'-3"
			2 @ 12'	5'	#8	11"	24	35	27'-9"
				6'			24	35	27'-9"
				7'			24	35	27'-11"
				8'			24	35	27'-11"
				9'			24	35	28'-1"
				10'			24	35	28'-2"
				11'			24	35	28'-3"
				12'			24	35	28'-5"
SECTION "B" & BAR GROUP "B"	3:1 = 16'-0"	0' TO 15'-0"	2 @ 6'	5'	#7	12"	11	16	19'-3"
				6'			11	16	19'-3"
				7'			11	16	19'-5"
				8'			11	16	19'-6"
				9'			11	16	19'-8"
				10'			11	16	19'-9"
			2 @ 8'	6'	#8	12"	11	16	22'-3"
				7'			11	16	22'-4"
				8'			11	16	22'-6"
				9'			11	16	22'-7"
				10'			11	16	22'-9"
				11'			11	16	22'-10"
				12'			11	16	23'-0"
			2 @ 10'	6'	#8	12"	15	21	28'-6"
				7'			15	21	28'-8"
				8'			15	21	28'-10"
				9'			15	21	29'-0"
				10'			15	21	29'-1"
				11'			15	21	29'-3"
				12'			15	21	29'-5"
SECTION "C" & BAR GROUP "C"	3:1 = 11'-0"	10'-0" TO 15'-0"	2 @ 6'	5'	#8	11"	11	16	19'-3"
				6'			11	16	19'-3"
				7'			11	16	19'-5"
				8'			11	16	19'-6"
				9'			11	16	19'-8"
				10'			11	16	19'-9"
				11'			11	16	20'-0"
				12'			11	16	20'-1"
			2 @ 8'	6'	#8	13"	15	21	28'-6"
				7'			15	21	28'-8"
				8'			15	21	28'-10"
				9'			15	21	29'-0"
				10'			15	21	29'-1"
				11'			15	21	29'-3"
				12'			15	21	29'-5"
			2 @ 10'	6'	#9	15"	19	27	34'-0"
				7'			19	27	34'-2"
				8'			19	27	34'-3"
				9'			19	27	34'-5"
				10'			19	27	34'-6"
				11'			19	27	34'-8"
				12'			19	27	34'-9"
SECTION "D" & BAR GROUP "D"	Varies with Length of Barrel	20'-0" TO 25'-0"	2 @ 6'	5'	#8	11"	Varies with length of Barrel.		19'-4"
				6'					19'-5"
				7'					19'-7"
				8'					19'-8"
				9'					19'-9"
				10'					20'-0"
			2 @ 8'	6'	#9	15"			24'-5"
				7'					24'-6"
				8'					24'-8"
				9'					24'-9"
				10'					24'-11"
				11'					25'-0"
				12'					25'-2"
			2 @ 10'	6'	#9	15"			28'-3"
				7'					28'-4"
				8'					28'-6"
				9'					28'-7"
				10'					28'-9"
				11'					28'-11"
				12'					29'-0"

SECTION & BAR GROUP	LENGTHS OF SECTION	DEPTH OF COVER	CLEAR SPANS	CLEAR HEIGHT	"d" bars — STRAIGHT — Longitudinal in Top Slab of Barrel. SIZE	SPACING	NO. REQ'D	LENGTH
SECTION "A" & BAR GROUP "A"	3:1 = 22'-0"	0' TO 10'-0"	2 @ 8'	5'	#4	12"	23	
				6'			23	
				7'			23	
				8'			23	
				9'			23	
				10'			23	
				11'			27	
				12'			27	
			2 @ 10'	5'	#4	12"	27	
				6'			27	
				7'			27	
				8'			27	
				9'			27	
				10'			27	
				11'			27	
				12'			27	
			2 @ 12'	5'	#4	12"	31	
				6'			31	
				7'			31	
				8'			31	
				9'			31	
				10'		

RESHOT 3-5-93

164

FED. ROAD No.	STATE	FED. AID PROJECT	FISCAL YEAR	SHEET No.	TOTAL SHEETS
6	ARK.			360A	
JOB No.					

BAR LIST FOR VARIOUS SECTIONS OF BARREL

Note:- Bars for each Section to be marked with the Section letter, thus for Section B, the bars should be marked Ba, Bb, Bc, Bd, Be, and Bf.

Designed by:- W.C.H. 8-7-62 Checked by:- EHS 8-10-62
Drawn by:- W.C.H. 8-15-62 Checked by:- EHS 8-20-62
Quantities by:- W.C.H. 8-17-62 Checked by:- EHS 8-20-62

SECTION "A" & BAR GROUP "A" — 4:1 = 32.0' — 0' TO 10'-0"

H	"a" bars STRAIGHT In Top and Bottom Slab of Barrel. 2 Add'l in Apron and Headwall - Each. SIZE	"a" bars STRAIGHT SPACING	"a" bars STRAIGHT NUMBER REQ'D 3:1	"a" bars STRAIGHT NUMBER REQ'D 4:1	"a" bars STRAIGHT LENGTH
5'			48	68	26'-5"
6'			48	68	26'-5"
7'	#5	12"	48	68	26'-9"
8'			48	68	27'-1"
9'			48	68	27'-5"
10'			48	68	27'-5"
6'			52	74	32'-8"
7'			52	74	32'-8"
8'	#6	11"	52	74	32'-9"
9'			52	74	33'-1"
10'			52	74	33'-5"
11'			52	74	33'-7"
12'			52	74	33'-9"
6'			52	74	38'-3"
7'			52	74	38'-5"
8'	#7	11"	52	74	38'-9"
9'			52	74	39'-1"
10'			52	74	39'-3"
11'			52	74	39'-7"
12'			52	74	39'-9"

H	"b" bars BENT - See Diagram below. In Bottom of Top Slab bent up over Division Walls - hooked. Alternate with "a" and "c" bars. SIZE	SPACING	NUMBER REQ'D 3:1	NUMBER REQ'D 4:1	LENGTH	X	Y	Z
5'			22	32	28'-1"	0'-5"	3'-11"	6'-5"
6'			22	32	28'-1"	0'-5"	3'-11"	6'-5"
7'	#6	12"	22	32	28'-2"	0'-5"	4'-0"	6'-5"
8'			22	32	28'-2"	0'-5"	4'-0"	6'-5"
9'			22	32	28'-3"	0'-5"	4'-1"	6'-7"
10'			22	32	28'-3"	0'-5"	4'-2"	6'-8"
6'			22	32	29'-5"	0'-5"	4'-3"	6'-8"
7'			24	36	34'-6"	0'-6"	4'-9"	7'-11"
8'			24	36	34'-7"	0'-6"	4'-9"	8'-0"
9'	#6	11"	24	36	34'-8"	0'-6"	4'-10"	8'-1"
10'			24	36	35'-0"	0'-6"	4'-11"	8'-2"
11'			24	36	35'-1"	0'-6"	4'-11"	8'-3"
12'			24	36	35'-2"	0'-6"	4'-11"	8'-4"
6'			24	36	40'-1"	0'-6"	5'-6"	9'-2"
7'			24	36	40'-1"	0'-6"	5'-6"	9'-2"
8'	#7	11"	24	36	40'-1"	0'-6"	5'-6"	9'-3"
9'			24	36	40'-2"	0'-6"	5'-6"	9'-3"
10'			24	36	40'-3"	0'-6"	5'-6"	9'-4"
11'			24	36	40'-3"	0'-6"	5'-6"	9'-4"
12'			24	36	40'-4"	0'-6"	5'-6"	9'-5"

H	"b2" bars BENT - See Diagram below. In Top of Bottom Slab bent down under Division Walls - hooked. Alternate with "a" and "c" bars. SIZE	SPACING	NUMBER REQ'D 3:1	NUMBER REQ'D 4:1	LENGTH	X	Y	Z
5'			22	32	28'-2"	0'-5½"	3'-10"	6'-5"
6'			22	32	28'-2"	0'-5½"	3'-10"	6'-5"
7'	#6	12"	22	32	28'-5"	0'-5½"	3'-11"	6'-5½"
8'			22	32	28'-6"	0'-5½"	3'-11"	6'-6"
9'			22	32	28'-10"	0'-5½"	4'-0"	6'-7"
10'			22	32	29'-2"	0'-5½"	4'-1"	6'-8"
6'			24	36	34'-7"	0'-7"	4'-8"	7'-11½"
7'			24	36	34'-7"	0'-7"	4'-8"	7'-11½"
8'	#6	11"	24	36	34'-10"	0'-7"	4'-9"	8'-0"
9'			24	36	35'-0"	0'-7"	4'-10"	8'-1"
10'			24	36	35'-2"	0'-7"	4'-10"	8'-2"
11'			24	36	35'-3"	0'-7"	4'-10"	8'-3"
12'			24	36	35'-5"	0'-7"	4'-10"	8'-4"
6'			24	36	40'-10"	0'-8"	5'-5½"	9'-2"
7'			24	36	40'-10"	0'-8"	5'-5½"	9'-2"
8'	#7	11"	24	36	41'-0"	0'-8"	5'-5½"	9'-3"
9'			24	36	41'-0"	0'-8"	5'-5½"	9'-3"
10'			24	36	41'-1"	0'-8"	5'-6"	9'-4"
11'			24	36	41'-2"	0'-8"	5'-6"	9'-4"
12'			24	36	41'-3"	0'-8"	5'-6"	9'-5"

H	"c" bars STRAIGHT In Top and Bottom Slab of Barrel. Alternate with "b" and "b2" bars. SIZE	SPACING	NUMBER REQ'D 3:1	NUMBER REQ'D 4:1	LENGTH
5'			44	64	17'-6"
6'			44	64	17'-6"
7'	#6	12"	44	64	17'-8"
8'			44	64	17'-8"
9'			44	64	17'-10"
10'			44	64	18'-0"
6'			48	70	21'-6"
7'			48	70	21'-8"
8'	#6	11"	48	70	21'-8"
9'			48	70	21'-10"
10'			48	70	22'-0"
11'			48	70	22'-0"
12'			48	70	22'-0"
6'			48	70	25'-8"
7'			48	70	25'-8"
8'	#7	11"	48	70	25'-10"
9'			48	70	26'-0"
10'			48	70	26'-0"
11'			48	70	26'-0"
12'			48	70	26'-0"

H	"d" bars Longitudinal in Top Slab of Barrel SIZE	SPACING	NUMBER REQ'D	LENGTH
5'			37	
6'			37	
7'	#4	12"	37	
8'			37	
9'			37	
10'			37	
6'			37	
7'			37	
8'	#4	12"	37	
9'			37	
10'			37	
11'			37	
12'			37	
6'			37	
7'			37	
8'	#4	12"	37	
9'			37	
10'			37	
11'			37	
12'			37	

H	"a1" bars STRAIGHT Longitudinal in Sidewalls and Division Walls SIZE	SPACING	NO. REQ'D	LENGTH
5'			30	
6'			36	
7'	#4	12"	42	
8'			48	
9'			54	
10'			60	
6'			36	
7'			42	
8'	#4	12"	48	
9'			54	
10'			60	
11'			66	
12'			72	
6'			36	
7'			42	
8'	#4	12"	48	
9'			54	
10'			60	
11'			66	
12'			72	

H	"e" bars Longitudinal in Bottom Slab of Barrel. SIZE	SPACING	NO. REQ'D	LENGTH
5'			37	
6'			37	
7'	#4	12"	37	
8'			37	
9'			37	
10'			37	
6'			37	
7'			37	
8'	#4	12"	37	
9'			37	
10'			37	
11'			37	
12'			37	
6'			37	
7'			37	
8'	#4	12"	37	
9'			37	
10'			37	
11'			37	
12'			37	

H	"f" bars STRAIGHT Vertical in Sidewalls and Division Walls SIZE	SPACING	NUMBER REQ'D 3:1	NUMBER REQ'D 4:1	LENGTH
5'			44	64	17'-6"
6'			44	64	17'-6"
7'	#4	12"	44	64	17'-8"
8'			44	64	17'-8"
9'			44	64	17'-10"
10'			44	64	18'-0"
6'			48	70	21'-6"
7'			48	70	21'-8"
8'	#5	12"	48	70	21'-10"
9'			48	70	22'-0"
10'			48	70	22'-0"
11'			48	70	22'-0"
12'			48	70	22'-0"
6'			48	70	25'-8"
7'			48	70	25'-8"
8'	#6	12"	48	70	25'-10"
9'			48	70	26'-0"
10'			48	70	26'-0"
11'			48	70	26'-0"
12'			48	70	26'-0"

SECTION "B" & BAR GROUP "B" — 4:1 = 16'-0" — 0' TO 15'-0"

H	"a" bars STRAIGHT In Top and Bottom Slab of Barrel. 2 Add'l in Apron and Headwall - Each. SIZE	SPACING	NUMBER REQ'D 3:1	NUMBER REQ'D 4:1	LENGTH
5'			20	30	26'-5"
6'			20	30	26'-5"
7'	#6	11"	20	30	26'-8"
8'			20	30	26'-9"
9'			20	30	27'-1"
10'			20	30	27'-5"
6'			20	30	32'-8"
7'			20	30	32'-8"
8'	#7	11"	20	30	32'-9"
9'			20	30	33'-1"
10'			20	30	33'-5"
11'			20	30	33'-7"
12'			20	30	33'-9"
6'			22	32	38'-3"
7'			22	32	38'-5"
8'	#7	11"	22	32	38'-9"
9'			22	32	39'-1"
10'			22	32	39'-3"
11'			22	32	39'-7"
12'			22	32	39'-9"

H	"b" bars BENT - See Diagram below. In Bottom of Top Slab bent up over Division Walls - hooked. Alternate with "a" and "c" bars. SIZE	SPACING	NUMBER REQ'D 3:1	NUMBER REQ'D 4:1	LENGTH	X	Y	Z
5'			11	16	34'-1"	0'-10"	4'-2"	7'-11½"
6'			11	16	34'-1"	0'-10"	4'-2"	7'-11½"
7'	#7	12"	11	16	34'-10"	0'-10"	4'-3"	8'-0"
8'			11	16	35'-0"	0'-10"	4'-4"	8'-0"
9'			11	16	35'-3"	0'-10"	4'-4"	8'-1"
10'			11	16	35'-5"	0'-10"	4'-4"	8'-2"
11'			11	16	35'-7"	0'-10"	4'-4"	8'-3"
12'			11	16	35'-9"	0'-10"	4'-4"	8'-3"
6'			11	16	41'-2"	0'-10½"	5'-0"	9'-2"
7'			11	16	41'-2"	0'-10½"	5'-0"	9'-2"
8'	#7	12"	11	16	41'-3"	0'-10½"	5'-0"	9'-3"
9'			11	16	41'-4"	0'-10½"	5'-0"	9'-3"
10'			11	16	41'-5"	0'-10½"	5'-0"	9'-4"
11'			11	16	41'-6"	0'-10½"	5'-0"	9'-4"
12'			11	16	41'-7"	0'-10½"	5'-0"	9'-5"
6'			22	32	38'-9"	0'-11"	5'-6"	9'-2"
7'			22	32	38'-9"	0'-11"	5'-6"	9'-2"
8'	#7	12"	22	32	38'-10"	0'-11"	5'-6"	9'-3"
9'			22	32	39'-0"	0'-11"	5'-6"	9'-3"
10'			22	32	39'-1"	0'-11"	5'-6"	9'-4"
11'			22	32	39'-3"	0'-11"	5'-6"	9'-4"
12'			22	32	39'-4"	0'-11"	5'-6"	9'-5"

H	"b2" bars BENT - See Diagram below. In Top of Bottom Slab bent down under Division Walls - hooked. Alternate with "a" and "c" bars. SIZE	SPACING	NUMBER REQ'D 3:1	NUMBER REQ'D 4:1	LENGTH	X	Y	Z
5'			11	16	34'-1"	0'-10½"	4'-2"	7'-11½"
6'			11	16	34'-1"	0'-10½"	4'-2"	7'-11½"
7'	#7	12"	11	16	34'-10"	0'-10½"	4'-3"	8'-0"
8'			11	16	35'-0"	0'-10½"	4'-4"	8'-0"
9'			11	16	35'-3"	0'-10½"	4'-4"	8'-1"
10'			11	16	35'-5"	0'-10½"	4'-4"	8'-2"
11'			11	16	35'-7"	0'-10½"	4'-4"	8'-3"
12'			11	16	35'-9"	0'-10½"	4'-4"	8'-3"
6'			11	16	41'-2"	0'-11"	5'-0"	9'-2"
7'			11	16	41'-2"	0'-11"	5'-0"	9'-2"
8'	#7	12"	11	16	41'-3"	0'-11"	5'-0"	9'-3"
9'			11	16	41'-4"	0'-11"	5'-0"	9'-3"
10'			11	16	41'-5"	0'-11"	5'-0"	9'-4"
11'			11	16	41'-6"	0'-11"	5'-0"	9'-4"
12'			11	16	41'-7"	0'-11"	5'-0"	9'-5"
6'			22	32	38'-9"	0'-11½"	5'-6"	9'-2"
7'			22	32	38'-9"	0'-11½"	5'-6"	9'-2"
8'	#7	12"	22	32	38'-10"	0'-11½"	5'-6"	9'-3"
9'			22	32	39'-0"	0'-11½"	5'-6"	9'-3"
10'			22	32	39'-1"	0'-11½"	5'-6"	9'-4"
11'			22	32	39'-3"	0'-11½"	5'-6"	9'-4"
12'			22	32	39'-4"	0'-11½"	5'-6"	9'-5"

H	"c" bars STRAIGHT In Top and Bottom Slab of Barrel. Alternate with "b" and "b2" bars. SIZE	SPACING	NUMBER REQ'D 3:1	NUMBER REQ'D 4:1	LENGTH
5'			22	32	21'-8"
6'			22	32	21'-8"
7'	#5	12"	22	32	21'-8"
8'			22	32	21'-10"
9'			22	32	22'-0"
10'			22	32	22'-0"
11'			22	32	22'-0"
12'			22	32	22'-0"
6'			22	32	25'-8"
7'			22	32	25'-8"
8'	#6	12"	22	32	25'-10"
9'			22	32	26'-0"
10'			22	32	26'-0"
11'			22	32	26'-0"
12'			22	32	26'-0"

H	"d" bars Longitudinal in Top Slab of Barrel SIZE	SPACING	NUMBER REQ'D	LENGTH
5'			36	
6'			36	
7'	#4	12"	36	
8'			36	
9'			36	
10'			36	
6'			49	
7'			49	
8'	#4	12"	49	
9'			49	
10'			49	
11'			49	
12'			49	
6'			49	
7'			49	
8'	#4	12"	49	
9'			49	
10'			49	
11'			49	
12'			49	

H	"a1" bars STRAIGHT Longitudinal in Sidewalls and Division Walls SIZE	SPACING	NO. REQ'D	LENGTH
5'			30	
6'			36	
7'	#4	12"	42	
8'			48	
9'			54	
10'			60	
6'			36	
7'			42	
8'	#4	12"	48	
9'			54	
10'			60	
11'			66	
12'			72	
6'			36	
7'			42	
8'	#4	12"	48	
9'			54	
10'			60	
11'			66	
12'			72	

H	"e" bars Longitudinal in Bottom Slab of Barrel. SIZE	SPACING	NO. REQ'D	LENGTH
5'			37	
6'			37	
7'	#4	12"	37	
8'			37	
9'			37	
10'			37	
6'			37	
7'			37	
8'	#4	12"	37	
9'			37	
10'			37	
11'			37	
12'			37	
6'			37	
7'			37	
8'	#4	12"	37	
9'			37	
10'			37	
11'			37	
12'			37	

H	"f" bars STRAIGHT Vertical in Sidewalls and Division Walls SIZE	SPACING	NUMBER REQ'D 3:1	NUMBER REQ'D 4:1	LENGTH
5'			20		17'-6"
6'			36		17'-6"
7'	#4	12"	37		17'-8"
8'			37		17'-8"
9'			37		17'-10"
10'			37		18'-0"
6'			37		21'-6"
7'			37		21'-8"
8'	#5	12"	37		21'-10"
9'			37		22'-0"
10'			37		22'-0"
11'			37		22'-0"
12'			37		22'-0"
6'			37		25'-8"
7'			37		25'-8"
8'	#6	12"	37		25'-10"
9'			37		26'-0"
10'			37		26'-0"
11'			37		26'-0"
12'			37		26'-0"

SECTION "C" & BAR GROUP "C" — 4:1 = 16'-0" — 10'-0" TO 20'-0"

H	"a" bars STRAIGHT In Top and Bottom Slab of Barrel. 2 Add'l in Apron and Headwall - Each. SIZE	SPACING	NUMBER REQ'D 3:1	NUMBER REQ'D 4:1	LENGTH
5'			24	36	26'-5"
6'			24	36	26'-5"
7'	#6	11"	24	36	26'-8"
8'			24	36	26'-8"
9'			24	36	27'-1"
10'			24	36	27'-5"
6'			22	32	32'-8"
7'			22	32	32'-8"
8'	#7	12"	22	32	32'-9"
9'			22	32	33'-1"
10'			22	32	33'-5"
11'			22	32	33'-7"
12'			22	32	33'-9"
6'			22	32	38'-9"
7'			22	32	38'-9"
8'	#7	12"	22	32	38'-10"
9'			22	32	39'-0"
10'			22	32	39'-1"
11'			22	32	39'-3"
12'			22	32	39'-4"

H	"b" bars BENT - See Diagram below. In Bottom of Top Slab bent up over Division Walls - hooked. Alternate with "a" and "c" bars. SIZE	SPACING	NUMBER REQ'D 3:1	NUMBER REQ'D 4:1	LENGTH	X	Y	Z
5'			11	16	35'-1"	0'-11½"	4'-3"	8'-0"
6'			11	16	35'-1"	0'-11½"	4'-3"	8'-0"
7'	#7	12"	11	16	35'-2"	0'-11½"	4'-3½"	8'-0"
8'			11	16	35'-2"	0'-11½"	4'-3½"	8'-0"
9'			11	16	35'-3"	0'-11½"	4'-3½"	8'-1"
10'			11	16	35'-4"	0'-11½"	4'-3½"	8'-2"
11'			11	16	35'-5"	0'-11½"	4'-3½"	8'-3"
12'			11	16	35'-6"	0'-11½"	4'-3½"	8'-3"
6'			11	16	41'-2"	0'-11½"	5'-0½"	9'-2"
7'			11	16	41'-2"	0'-11½"	5'-0½"	9'-2"
8'	#7	12"	11	16	41'-3"	0'-11½"	5'-0½"	9'-3"
9'			11	16	41'-4"	0'-11½"	5'-0½"	9'-3"
10'			11	16	41'-5"	0'-11½"	5'-0½"	9'-4"
11'			11	16	41'-6"	0'-11½"	5'-0½"	9'-4"
12'			11	16	41'-7"	0'-11½"	5'-0½"	9'-5"
6'			22	32	38'-9"	1'-0"	5'-6"	9'-2"
7'			22	32	38'-9"	1'-0"	5'-6"	9'-2"
8'	#7	12"	22	32	38'-10"	1'-0"	5'-6"	9'-3"
9'			22	32	39'-0"	1'-0"	5'-6"	9'-3"
10'			22	32	39'-1"	1'-0"	5'-6"	9'-4"
11'			22	32	39'-3"	1'-0"	5'-6"	9'-4"
12'			22	32	39'-4"	1'-0"	5'-6"	9'-5"

H	"b2" bars BENT - See Diagram below. In Top of Bottom Slab bent down under Division Walls - hooked. Alternate with "a" and "c" bars. SIZE	SPACING	NUMBER REQ'D 3:1	NUMBER REQ'D 4:1	LENGTH	X	Y	Z
5'			11	16	35'-1"	0'-10½"	4'-3"	8'-0"
6'			11	16	35'-1"	0'-10½"	4'-3"	8'-0"
7'	#7	12"	11	16	35'-2"	0'-10½"	4'-3½"	8'-0"
8'			11	16	35'-2"	0'-10½"	4'-3½"	8'-0"
9'			11	16	35'-3"	0'-10½"	4'-3½"	8'-1"
10'			11	16	35'-4"	0'-10½"	4'-3½"	8'-2"
11'			11	16	35'-5"	0'-10½"	4'-3½"	8'-3"
12'			11	16	35'-6"	0'-10½"	4'-3½"	8'-3"
6'			11	16	41'-2"	0'-11"	5'-0½"	9'-2"
7'			11	16	41'-2"	0'-11"	5'-0½"	9'-2"
8'	#7	12"	11	16	41'-3"	0'-11"	5'-0½"	9'-3"
9'			11	16	41'-4"	0'-11"	5'-0½"	9'-3"
10'			11	16	41'-5"	0'-11"	5'-0½"	9'-4"
11'			11	16	41'-6"	0'-11"	5'-0½"	9'-4"
12'			11	16	41'-7"	0'-11"	5'-0½"	9'-5"
6'			22	32	38'-9"	1'-0"	5'-6"	9'-2"
7'			22	32	38'-9"	1'-0"	5'-6"	9'-2"
8'	#7	12"	22	32	38'-10"	1'-0"	5'-6"	9'-3"
9'			22	32	39'-0"	1'-0"	5'-6"	9'-3"
10'			22	32	39'-1"	1'-0"	5'-6"	9'-4"
11'			22	32	39'-3"	1'-0"	5'-6"	9'-4"
12'			22	32	39'-4"	1'-0"	5'-6"	9'-5"

H	"c" bars STRAIGHT In Top and Bottom Slab of Barrel. Alternate with "b" and "b2" bars. SIZE	SPACING	NUMBER REQ'D 3:1	NUMBER REQ'D 4:1	LENGTH
5'			22	32	21'-8"
6'			22	32	21'-8"
7'	#5	12"	22	32	21'-8"
8'			22	32	21'-10"
9'			22	32	22'-0"
10'			22	32	22'-0"
11'			22	32	22'-0"
12'			22	32	22'-0"
6'			22	32	25'-8"
7'			22	32	25'-8"
8'	#6	12"	22	32	25'-10"
9'			22	32	26'-0"
10'			22	32	26'-0"
11'			22	32	26'-0"
12'			22	32	26'-0"

H	"d" bars Longitudinal in Top Slab of Barrel SIZE	SPACING	NUMBER REQ'D	LENGTH
5'			36	
6'			36	
7'	#4	12"	36	
8'			36	
9'			36	
10'			36	
6'			49	
7'			49	
8'	#4	12"	49	
9'			49	
10'			49	
11'			49	
12'			49	
6'			49	
7'			49	
8'	#4	12"	49	
9'			49	
10'			49	
11'			49	
12'			49	

H	"a1" bars STRAIGHT Longitudinal in Sidewalls and Division Walls SIZE	SPACING	NO. REQ'D	LENGTH
5'			30	
6'			36	
7'	#4	12"	42	
8'			48	
9'			54	
10'			60	
6'			36	
7'			42	
8'	#4	12"	48	
9'			54	
10'			60	
11'			66	
12'			72	
6'			36	
7'			42	
8'	#4	12"	48	
9'			54	
10'			60	
11'			66	
12'			72	

H	"e" bars Longitudinal in Bottom Slab of Barrel. SIZE	SPACING	NO. REQ'D	LENGTH
5'			37	
6'			37	
7'	#4	12"	37	
8'			37	
9'			37	
10'			37	
6'			37	
7'			37	
8'	#4	12"	37	
9'			37	
10'			37	
11'			37	
12'			37	
6'			37	
7'			37	
8'	#4	12"	37	
9'			37	
10'			37	
11'			37	
12'			37	

H	"f" bars STRAIGHT Vertical in Sidewalls and Division Walls SIZE	SPACING	NUMBER REQ'D 3:1	NUMBER REQ'D 4:1	LENGTH
5'			20		17'-6"
6'			36		17'-6"
7'	#4	12"	37		17'-8"
8'			37		17'-8"
9'			37		17'-10"
10'			37		18'-0"
6'			37		21'-6"
7'			37		21'-8"
8'	#5	12"	37		21'-10"
9'			37		22'-0"
10'			37		22'-0"
11'			37		22'-0"
12'			37		22'-0"
6'			37		25'-8"
7'			37		25'-8"
8'	#6	12"	37		25'-10"
9'			37		26'-0"
10'			37		26'-0"
11'			37		26'-0"
12'			37		26'-0"

SECTION "D" & BAR GROUP "D" — 4:1 = 32.0' — 20'-0" TO 25'-0"

H	"a" bars STRAIGHT In Top and Bottom Slab of Barrel. 2 Add'l in Apron and Headwall - Each. SIZE	SPACING	NUMBER REQ'D 3:1	NUMBER REQ'D 4:1	LENGTH
5'			20	30	26'-5"
6'			20	30	26'-5"
7'	#6	11"	20	30	26'-8"
8'			20	30	26'-9"
9'			20	30	27'-1"
10'			20	30	27'-5"
6'			20	30	32'-8"
7'			20	30	32'-8"
8'	#7	11"	20	30	32'-9"
9'			20	30	33'-1"
10'			20	30	33'-5"
11'			20	30	33'-7"
12'			20	30	33'-9"
6'			22	32	38'-9"
7'			22	32	38'-9"
8'	#7	11"	22	32	38'-10"
9'			22	32	39'-0"
10'			22	32	39'-1"
11'			22	32	39'-3"
12'			22	32	39'-4"

H	"b" bars BENT - See Diagram below. In Bottom of Top Slab bent up over Division Walls - hooked. Alternate with "a" and "c" bars. SIZE	SPACING	NUMBER REQ'D 3:1	NUMBER REQ'D 4:1	LENGTH	X	Y	Z
5'			11	16	35'-1"	0'-11½"	4'-3"	8'-0"
6'			11	16	35'-1"

FED. ROAD NO.	STATE	FED. AID PROJECT	FISCAL YEAR	SHEET NO.	TOTAL SHEETS
6	ARK.			3608	
JOB NO.					

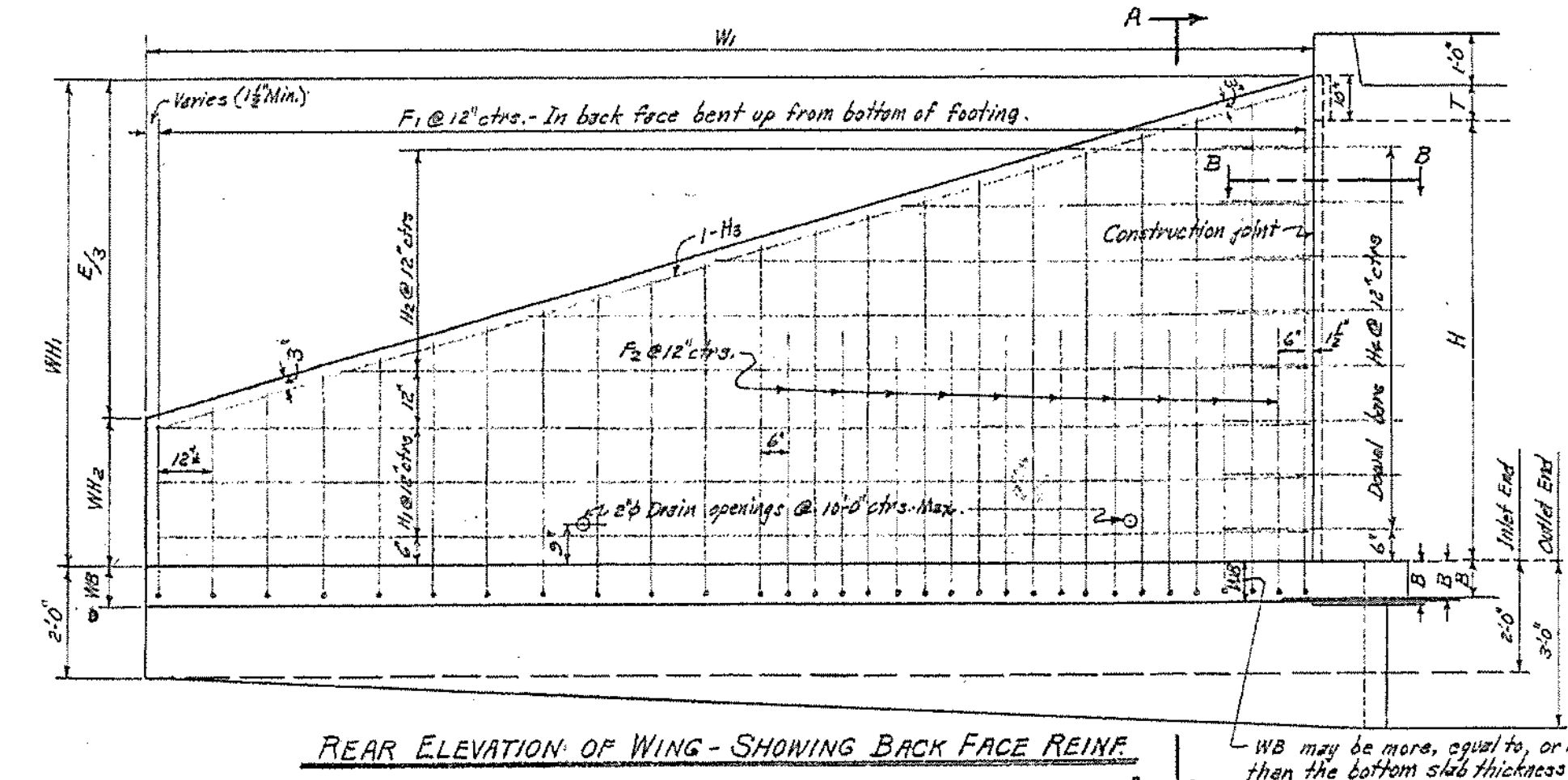

REAR ELEVATION OF WING - SHOWING BACK FACE REINF.

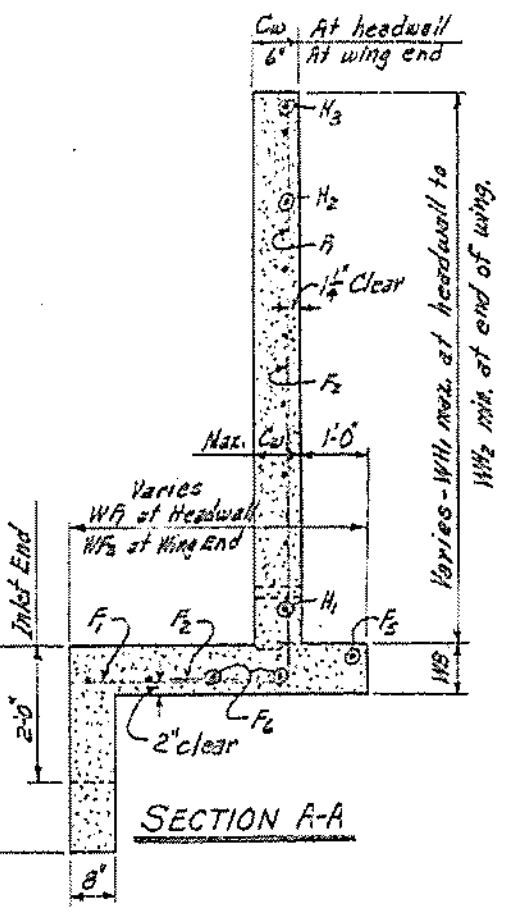

SECTION A-A

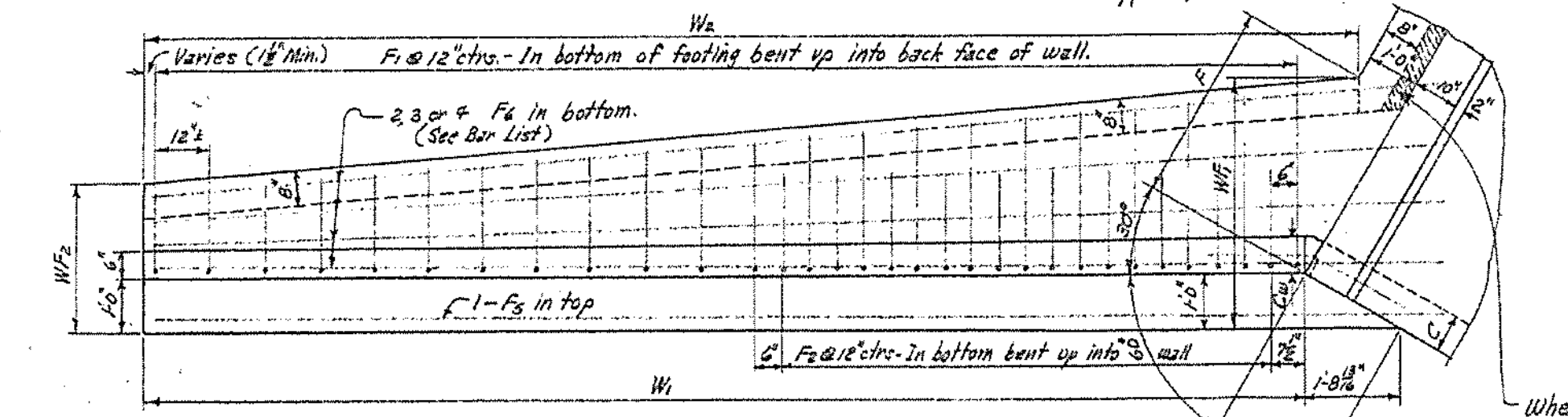

PLAN OF WING - SHOWING FOOTING REINF.

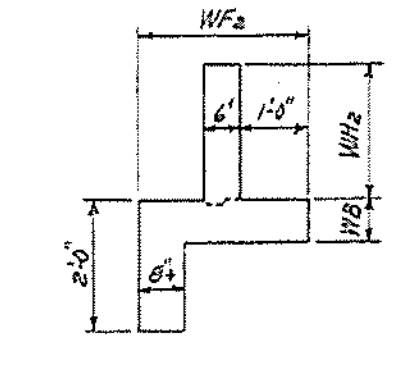

END VIEW OF WING

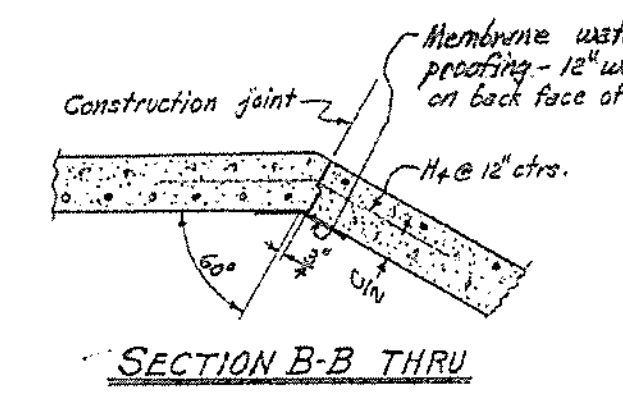

SECTION B-B THRU CONSTRUCTION JOINT

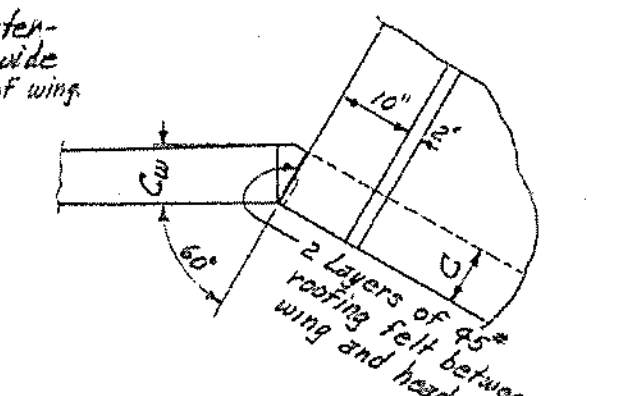

DETAIL AT TOP OF WING

NOTE:- Payment for membrane waterproofing and roofing felt to be included in the price bid for Class S Concrete.

WING DIMENSIONS

CLEAR HEIGHT OF BOX	THICKNESS OF WING FOOTING	THICKNESS OF WING AT HEADWALL = C	WINGWALL HEIGHTS: AT HEADWALL	WINGWALL HEIGHTS: AT END OF WING	WIDTHS OF WING FOOTINGS: AT HEADWALL	WIDTHS OF WING FOOTINGS: AT END OF WING	PERPENDICULAR FOOTING DIMENSION	PERPENDICULAR DIST. FROM HDWL TO END OF WING	LENGTH OF WINGWALLS	INSIDE FOOTING DIMENSION	* QUANTITY PER WING, CLASS S CONCRETE: INLET END	OUTLET END
H	WB	Cw	WH1	WH2	WF1	WF2	F	E	W1	W2	CU.YD.	CU.YD.
2'	7"	6"	2'-10"	0'-8"	2'-4"	2'-0"	0'-11¾"	6'-6"	7'-6"	7'-1½"	0.889	0.986
3'	7"	6"	3'-10"	1'-0"	2'-8"	2'-1½"	1'-4⅜"	8'-6"	9'-9¾"	9'-7¼"	1.338	1.466
4'	7"	6"	4'-10"	1'-4"	3'-0"	2'-3"	1'-9"	10'-6"	12'-1½"	12'-1½"	1.868	2.027
5'	7"	6"	5'-10"	1'-8"	3'-4"	2'-4½"	2'-1⅝"	12'-6"	14'-5¼"	14'-7½"	2.478	2.668
		7"	5'-10"	1'-8"	3'-4"	2'-4½"	2'-1⅝"	12'-6"	14'-5¼"	14'-7½"	2.582	2.772
6'	8"	7"	6'-10"	2'-0"	3'-8"	2'-6"	2'-6¼"	14'-6"	16'-9"	17'-1½"	3.440	3.661
		7½"	6'-10"	2'-0"	3'-8"	2'-6"	2'-6¼"	14'-6"	16'-9"	17'-1½"	3.511	3.732
		8"	6'-10"	2'-0"	3'-8"	2'-6"	2'-6¼"	14'-6"	16'-9"	17'-1½"	3.582	3.803
7'	8½"	7½"	7'-10"	2'-4"	4'-2"	2'-7½"	3'-1¼"	16'-6"	19'-0½"	19'-8¾"	4.505	4.758
		8"	7'-10"	2'-4"	4'-2"	2'-7½"	3'-1¼"	16'-6"	19'-0½"	19'-8¾"	4.597	4.851
8'	9"	8"	8'-10"	2'-8"	4'-8"	2'-9"	3'-8"	18'-6"	21'-4½"	22'-4"	5.761	6.047

* Quantity per wing does not include headwall or that portion of apron or toewall for the length W3.

APRON DIMENSION W3

W3 = (OW - 2F)

CLEAR SPAN	CLEAR HEIGHT	2 x FOOTING DIMENSION	SINGLE BARREL CULVERT OW	W3	DOUBLE BARREL CULVERT OW	W3	TRIPLE BARREL CULVERT OW	W3	QUADRUPLE BARREL CULVERT OW	W3	QUINTUPLE BARREL CULVERT OW	W3
S	H	2F	OW	W3	OW	W3	OW	W3	OW	W3	OW	W3
4'	2'	1'-11½"	5'-0"	3'-0½"	9'-8"	7'-8½"	14'-4"	12'-4½"	19'-0"	17'-0½"	23'-8"	21'-8½"
	3'	2'-8¾"	5'-0"	2'-3¼"	9'-8"	6'-11¼"	14'-4"	11'-7¼"	19'-0"	16'-3¼"	23'-8"	20'-11¼"
	4'	3'-6"	5'-0"	1'-6"	9'-8"	6'-2"	14'-4"	10'-10"	19'-0"	15'-6"	23'-8"	20'-2"
	5'	4'-3¼"	5'-0"	0'-8¾"	9'-8"	5'-4¾"	14'-4"	10'-0¾"	19'-0"	14'-8¾"	23'-8"	19'-4¾"
	6'	5'-0½"	5'-2"	0'-1½"	9'-11"	4'-10½"	14'-8"	9'-7½"	19'-5"	14'-4½"	24'-2"	19'-1½"
5'	3'	2'-8¾"	6'-0"	3'-3¼"	11'-8"	8'-11¼"	17'-4"	14'-7¼"	23'-0"	20'-3¼"	28'-8"	25'-11¼"
	4'	3'-6"	6'-0"	2'-6"	11'-8"	8'-2"	17'-4"	13'-10"	23'-0"	19'-6"	28'-8"	25'-2"
	5'	4'-3¼"	6'-0"	1'-8¾"	11'-8"	7'-4¾"	17'-4"	13'-0¾"	23'-0"	18'-8¾"	28'-8"	24'-4¾"
	6'	5'-0½"	6'-2"	1'-1½"	11'-11"	6'-10½"	17'-8"	12'-7½"	23'-5"	18'-4½"	29'-2"	24'-1½"
	7'	6'-2½"	6'-3"	0'-0½"	12'-1"	5'-10½"	17'-11"	11'-8½"	23'-9"	17'-6½"	29'-7"	23'-4½"
6'	3'	2'-8¾"	7'-0"	4'-3¼"	13'-8"	10'-11¼"	20'-4"	17'-7¼"	27'-0"	24'-3¼"	33'-8"	30'-11¼"
	4'	3'-6"	7'-0"	3'-6"	13'-8"	10'-2"	20'-4"	16'-10"	27'-0"	23'-6"	33'-8"	30'-2"
	5'	4'-3¼"	7'-0"	2'-8¾"	13'-8"	9'-4¾"	20'-4"	16'-0¾"	27'-0"	22'-8¾"	33'-8"	29'-4¾"
	6'	5'-0½"	7'-2"	2'-1½"	13'-11"	8'-10½"	20'-8"	15'-7½"	27'-5"	22'-4½"	34'-2"	29'-1½"
	7'	6'-2½"	7'-3"	1'-0½"	14'-1"	7'-10½"	20'-11"	14'-8½"	27'-9"	21'-6½"	34'-7"	28'-4½"
	8'	7'-4"	7'-4"	0'-0"	14'-2"	6'-10"	21'-0"	13'-8"	27'-10"	20'-6"	34'-8"	27'-4"
7'	4'	3'-6"	8'-0"	4'-6"	15'-8"	12'-2"	23'-4"	19'-10"	31'-0"	27'-6"	38'-8"	35'-2"
	5'	4'-3¼"	8'-0"	3'-8¾"	15'-8"	11'-4¾"	23'-4"	19'-0¾"	31'-0"	26'-8¾"	38'-8"	34'-4¾"
	6'	5'-0½"	8'-2"	3'-1½"	15'-11"	10'-10½"	23'-8"	18'-7½"	31'-5"	26'-4½"	39'-2"	34'-1½"
	7'	6'-2½"	8'-3"	2'-0½"	16'-1"	9'-10½"	23'-11"	17'-8½"	31'-9"	25'-6½"	39'-7"	33'-4½"
	8'	7'-4"	8'-4"	1'-0"	16'-2"	8'-10"	24'-0"	16'-8"	31'-10"	24'-6"	39'-8"	32'-4"
8'	4'	3'-6"	9'-0"	5'-6"	17'-8"	14'-2"	26'-4"	22'-10"	35'-0"	31'-6"	43'-8"	40'-2"
	5'	4'-3¼"	9'-2"	4'-10¾"	17'-11"	13'-7¾"	26'-8"	22'-4¾"	35'-5"	31'-1¾"	44'-2"	39'-10¾"
	6'	5'-0½"	9'-2"	4'-1½"	17'-11"	12'-10½"	26'-8"	21'-7½"	35'-5"	30'-4½"	44'-2"	39'-1½"
	7'	6'-2½"	9'-3"	3'-0½"	18'-1"	11'-10½"	26'-11"	20'-8½"	35'-9"	29'-6½"	44'-7"	38'-4½"
	8'	7'-4"	9'-4"	2'-0"	18'-2"	10'-10"	27'-0"	19'-8"	35'-10"	28'-6"	44'-8"	37'-4"
9'	5'	4'-3¼"	10'-2"	5'-10¾"	19'-11"	15'-7¾"	29'-8"	25'-4¾"	39'-5"	35'-1¾"	49'-2"	44'-10¾"
	6'	5'-0½"	10'-3"	5'-2½"	20'-1"	15'-0½"	29'-11"	24'-10½"	39'-9"	34'-8½"	49'-7"	44'-6½"
	7'	6'-2½"	10'-3"	4'-0½"	20'-1"	13'-10½"	29'-11"	23'-8½"	39'-9"	33'-6½"	49'-7"	43'-4½"
	8'	7'-4"	10'-4"	3'-0"	20'-2"	12'-10"	30'-0"	22'-8"	39'-10"	32'-6"	49'-8"	42'-4"
10'	5'	4'-3¼"	11'-2"	6'-10¾"	21'-11"	17'-7¾"	32'-8"	28'-4¾"	43'-5"	39'-1¾"	54'-2"	49'-10¾"
	6'	5'-0½"	11'-3"	6'-2½"	22'-1"	17'-0½"	32'-11"	27'-10½"	43'-9"	38'-8½"	54'-7"	49'-6½"
	7'	6'-2½"	11'-3"	5'-0½"	22'-1"	15'-10½"	32'-11"	26'-8½"	43'-9"	37'-6½"	54'-7"	48'-4½"
	8'	7'-4"	11'-4"	4'-0"	22'-2"	14'-10"	33'-0"	25'-8"	43'-10"	36'-6"	54'-8"	47'-4"
11'	6'	5'-0½"	12'-4"	7'-3½"	24'-2"	19'-1½"	36'-0"	30'-11½"	47'-10"	42'-9½"		
	7'	6'-2½"	12'-4"	6'-1½"	24'-2"	17'-11½"	36'-0"	29'-9½"	47'-10"	41'-7½"		
	8'	7'-4"	12'-4"	5'-0"	24'-2"	16'-10"	36'-0"	28'-8"	47'-10"	40'-6"		
12'	6'	5'-0½"	13'-4"	8'-3½"	26'-2"	21'-1½"	39'-0"	33'-11½"	51'-10"	46'-9½"		
	7'	6'-2½"	13'-4"	7'-1½"	26'-2"	19'-11½"	39'-0"	32'-9½"	51'-10"	45'-7½"		
	8'	7'-4"	13'-4"	6'-0"	26'-2"	18'-10"	39'-0"	31'-8"	51'-10"	44'-6"		

QUANTITIES

CLEAR SPAN	CLEAR HEIGHT	THICKNESS OF WING AT HEADWALL	THICKNESS OF WING FOOTING	REINFORCING STEEL ⊗ - FOR 4 WINGS	CLASS S CONCRETE - 4 WINGS (HEADWALLS, WINGWALLS, FOOTINGS, TOEWALLS AND APRONS): SINGLE BARREL CULVERT	DOUBLE BARREL CULVERT	TRIPLE BARREL CULVERT	QUADRUPLE BARREL CULVERT	QUINTUPLE BARREL CULVERT
S	H	Cw	WB	LB.	CU.YD.	CU.YD.	CU.YD.	CU.YD.	CU.YD.
4'	2'	6"	7"	108.0	4.50	5.46	6.42	7.38	8.34
	3'	6"	7"	164.4	6.26	7.21	8.17	9.13	10.09
	4'	6"	7"	254.6	8.33	9.28	10.24	11.20	12.16
	5'	6"	7"	357.8	10.72	11.68	12.64	13.60	14.56
	6'	7"	8"	583.1	14.55	15.53	16.52	17.51	18.49
5'	3'	6"	7"	164.4	6.47	7.63	8.79	9.96	11.12
	4'	6"	7"	254.6	8.54	9.70	10.87	10.03	13.20
	5'	6"	7"	357.8	10.94	12.10	13.26	14.43	15.59
	6'	7"	8"	583.1	14.77	15.96	17.15	18.34	19.54
	7'	7½"	8½"	1134.6	18.94	20.15	21.37	22.59	23.80
6'	3'	6"	7"	164.4	6.68	8.06	9.42	10.80	12.18
	4'	6"	7"	254.6	8.75	10.14	11.49	12.87	14.25
	5'	6"	7"	357.8	11.15	12.53	13.89	15.27	16.65
	6'	7"	8"	583.1	14.98	16.39	17.78	19.18	20.59
	7'	7½"	8½"	1134.6	19.15	20.58	22.00	23.43	24.86
	8'	8"	9"	1425.6	24.09	25.53	26.96	28.39	29.83
7'	4'	6"	7"	254.6	8.97	10.58	12.15	13.76	15.35
	5'	6"	7"	357.8	11.36	12.97	14.54	16.15	17.75
	6'	7"	8"	583.1	15.20	16.82	18.42	20.04	21.66
	7'	7½"	8½"	1134.6	19.38	21.02	22.64	24.28	25.92
	8'	8"	9"	1425.6	24.32	25.97	27.60	29.25	30.89
8'	4'	6"	7"	254.6	9.19	11.03	12.82	14.65	16.45
	5'	7"	7"	357.8	12.03	13.89	15.70	17.55	19.36
	6'	7"	8"	583.1	15.42	17.27	19.09	20.93	22.75
	7'	7½"	8½"	1134.6	19.59	21.46	23.30	25.16	26.99
	8'	8"	9"	1425.6	24.54	26.41	28.24	30.11	31.96
9'	5'	7"	7"	357.8	12.26	14.34	16.37	18.45	20.47
	6'	7½"	8"	583.1	15.94	18.04	20.09	22.19	24.23
	7'	7½"	8½"	1134.6	19.81	21.91	23.96	26.06	28.10
	8'	8"	9"	1425.6	24.76	26.86	28.91	31.00	33.05
10'	5'	7"	7"	357.8	12.49	14.80	17.05	19.26	21.52
	6'	7½"	8"	583.1	16.17	18.50	20.77	22.99	25.28
	7'	7½"	8½"	1134.6	20.04	22.37	24.64	26.87	29.15
	8'	8"	9"	1425.6	24.98	27.31	29.58	31.81	34.10
11'	6'	8"	8"	583.1	16.69	19.27	21.76	24.23	
	7'	8"	8½"	1134.6	20.64	23.22	25.71	28.18	
	8'	8"	9"	1425.6	25.19	27.77	30.27	32.74	
12'	6'	8"	8"	583.1	16.92	19.75	22.45	25.18	
	7'	8"	8½"	1134.6	20.87	23.69	26.40	29.13	
	8'	8"	9"	1425.6	25.42	28.25	30.96	33.69	

⊗ For reinforcing steel in Headwalls and Aprons, See Details of Standard Barrel Sections for R.C. Box Culverts for the desired Span and Height.

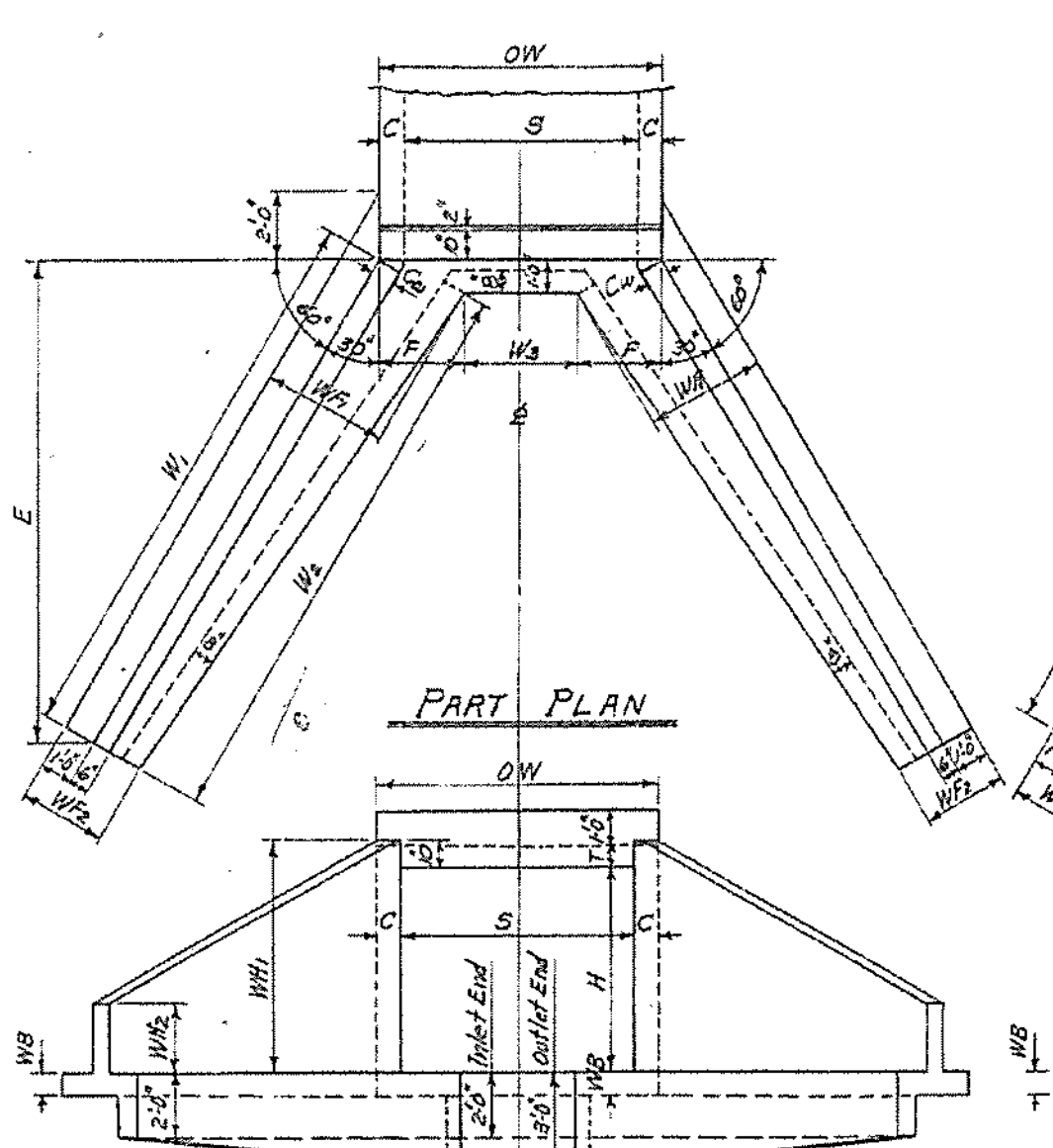

END ELEVATION

SINGLE BARREL CULVERT

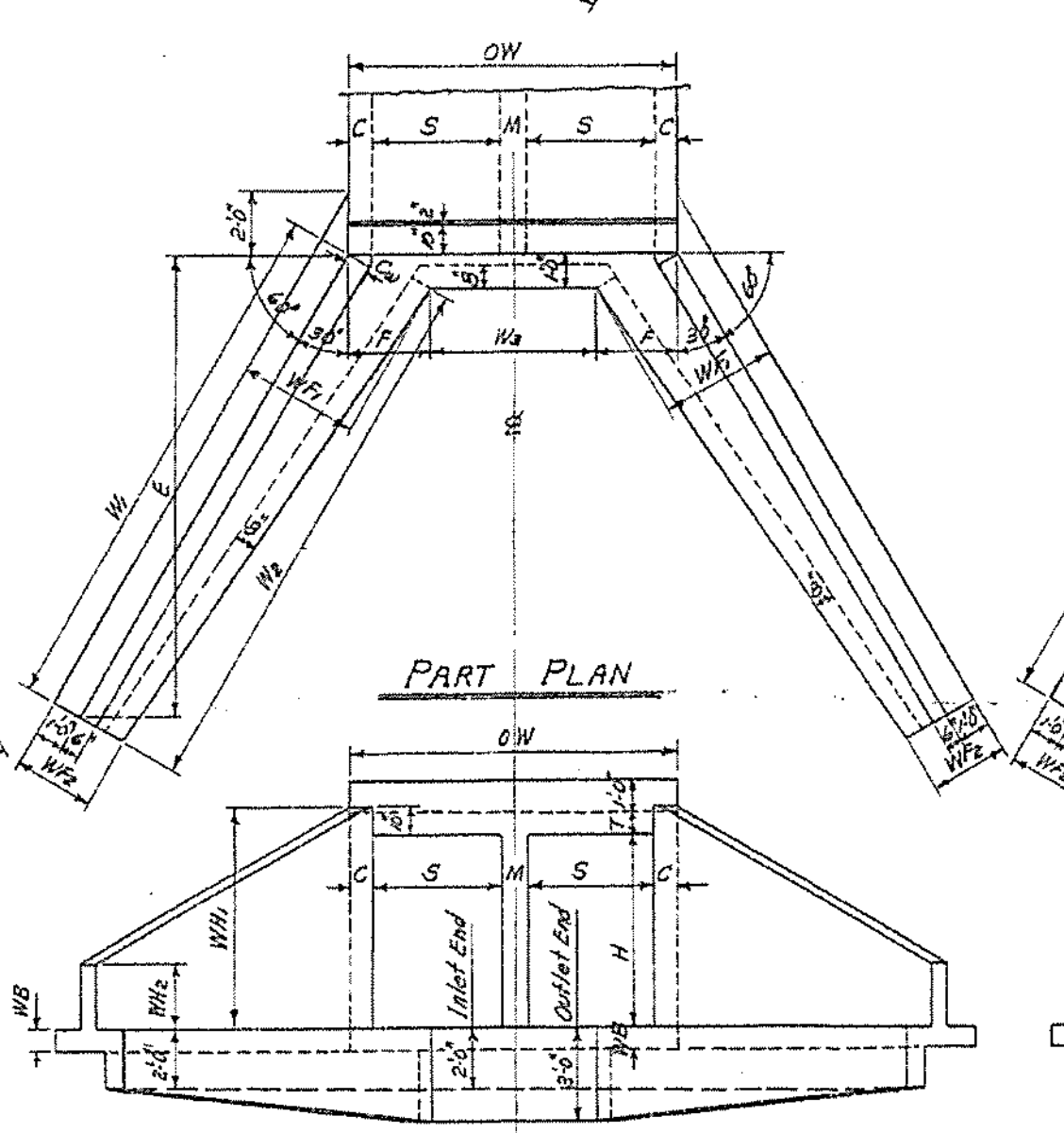

END ELEVATION

DOUBLE BARREL CULVERT

NOTE:- Plans and Elevations are not to scale.

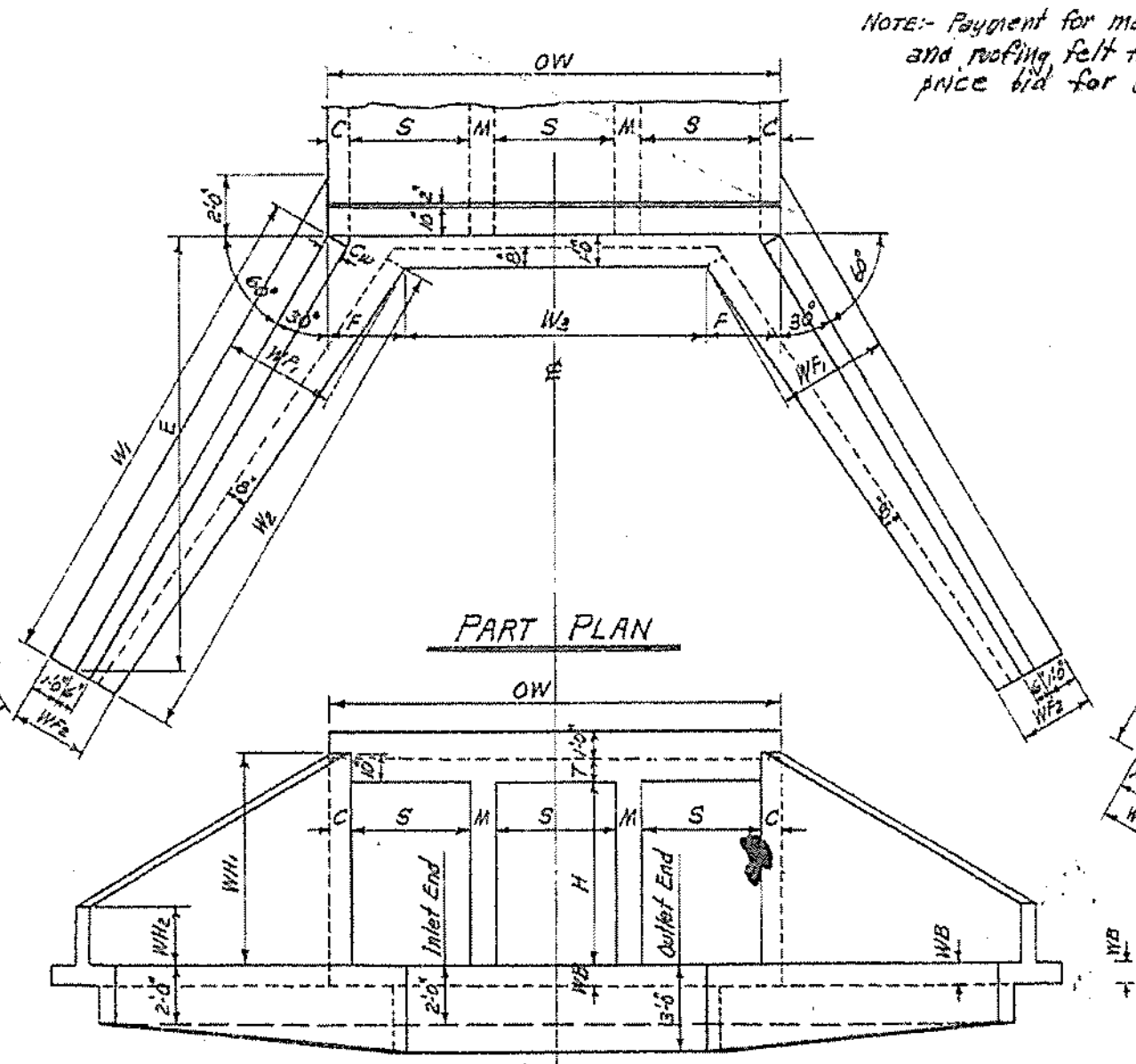

END ELEVATION

TRIPLE BARREL CULVERT

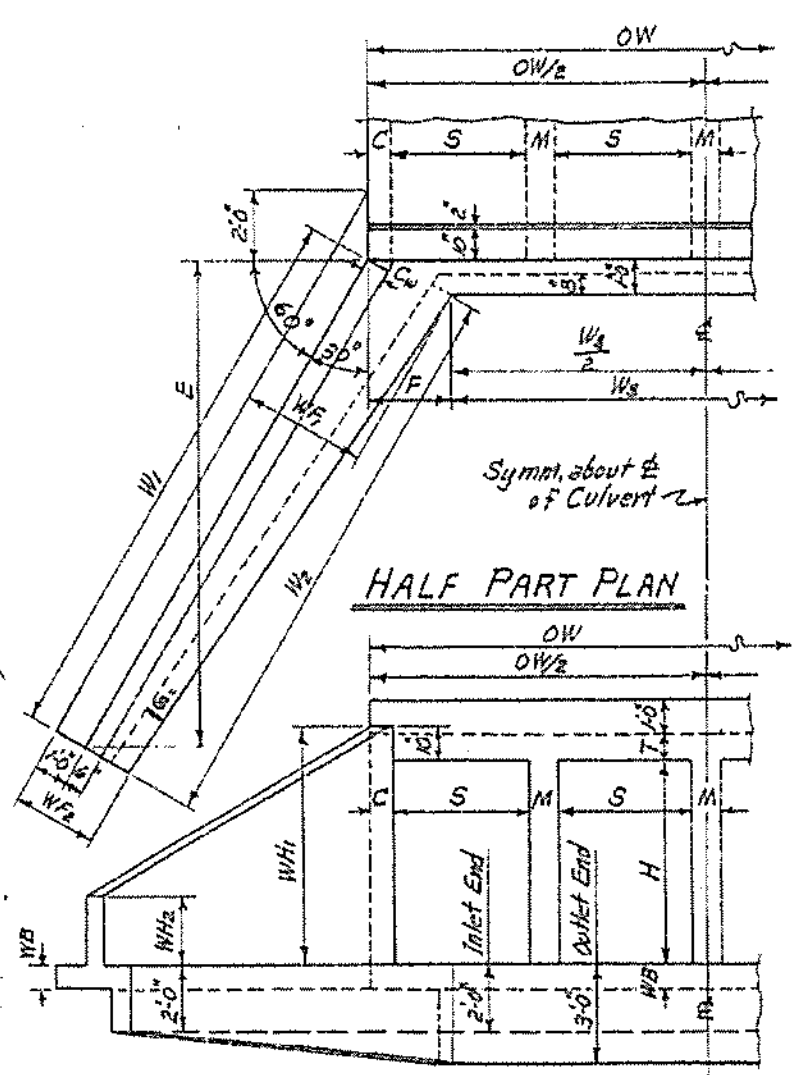

HALF END ELEVATION

QUADRUPLE BARREL CULVERT

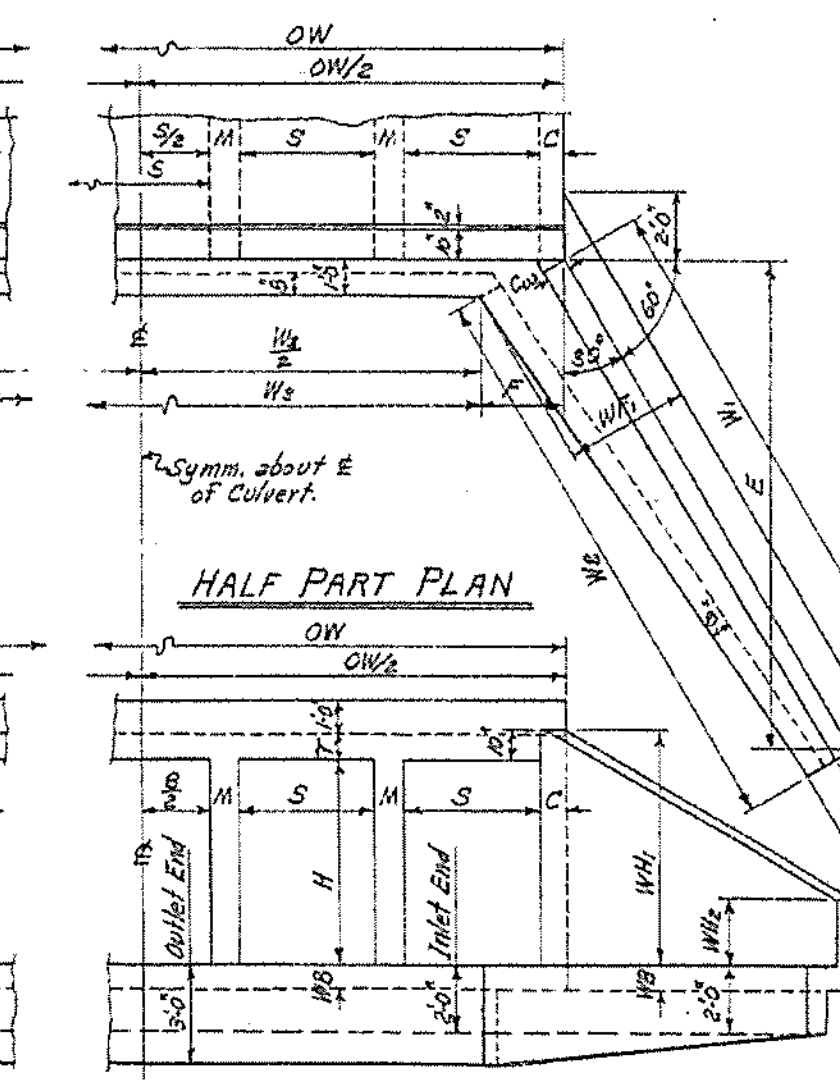

HALF END ELEVATION

QUINTUPLE BARREL CULVERT

MEMBRANE:- A membrane waterproofing 12" wide, consisting of three moppings of waterproofing asphalt and two alternate layers of treated cotton fabric shall be applied to the back face of wing to cover the construction joints in wings.

GENERAL NOTES:-

CONCRETE:- All concrete to be Class S, and shall be poured in the dry. All exposed corners to have ¾" chamfers.

REINFORCING STEEL:- Reinforcing steel to be deformed bars of intermediate or hard grade.

CONSTRUCTION JOINTS:- Construction joints between wingwall, footings and sidewalls shall be only where shown on plans.

SPECIFICATIONS:- Arkansas State Highway Commission Standard Specifications for Highway Construction and applicable Special Provisions.

UNIT STRESSES:-

Class S Concrete (n=10) 1200#/□"

Reinforcing Steel 20,000#/□"

NOTE:- This drawing to be used in conjunction with Standard Barrel Sections, Drawing Nos. as listed below.

SINGLES	DOUBLES	TRIPLES	QUADRUPLES	QUINTUPLES
R-100X-0	R-200X-0	R-300X-0	R-400X-0	R-500X-0
R-100X-X1	R-200X-X1	R-300X-X1	R-400X-X1	R-500X-X1
R-100X-X2	R-200X-X2	R-300X-X2	R-400X-X2	
	R-200X-X3	R-300X-X3		

CLASS S CONCRETE

BAR LIST FOR ONE WING - 4 REQUIRED

F1 BENT: In bottom of footing, bent up into back face of wing. One bar of each length.
F2 BENT: In bottom of footing, bent up into back face of wing. Alt. with F1 bars.
F5 STRAIGHT: Longitudinal in top of wing footing heel.
F6 STRAIGHT: Longitudinal in bottom of wing footing toe.
H1 STRAIGHT: Horizontal in back face of wing.
H2 STRAIGHT: Horizontal in back face of wing. One bar of each length.
H3 STRAIGHT: In back face of wing at top-on slope.
H4 BENT: Dowels thru construction joint at headwall.

CLEAR HEIGHT H	F1 SIZE	F1 SPACING	F1 NO. REQ'D	F1 LENGTHS VARY MIN.	F1 LENGTHS VARY MAX.	F1 X MIN.	F1 X MAX.	F1 Y MIN.	F1 Y MAX.	F2 SIZE	F2 SPACING	F2 NO. REQ'D	F2 LENGTH	F2 X	F2 Y	F5 SIZE	F5 NO. REQ'D	F5 LENGTH	F6 SIZE	F6 NO. REQ'D	F6 LENGTH	H1 SIZE	H1 SPACING	H1 NO. REQ'D	H1 LENGTH	H2 SIZE	H2 SPACING	H2 NO. REQ'D	H2 LENGTHS VARY MAX.	H2 LENGTHS VARY MIN.	H3 SIZE	H3 NO. REQ'D	H3 LENGTH	H4 SIZE	H4 SPACING	H4 NO. REQ'D	H4 LENGTH	H4 X	QUANTITY REINFORCING STEEL PER WING LB.
2'	#3	12"	8	1'-6"	3'-10"	0'-8"	1'-0"	0'-11"	2'-11"	—	—	—	—	—	—	#3	1	9'-8"	#3	2	8'-6"	#3	12"	1	7'-2"	#3	12"	1	—	4'-0"	#3	1	7'-4"	#3	12"	2	2'-8"	1'-4"	27.0
3'	#3	12"	10	2'-2"	5'-2"	0'-10"	1'-3"	1'-5"	4'-0"	—	—	—	—	—	—	#3	1	12'-0"	#3	2	11'-0"	#3	12"	1	9'-6"	#3	12"	2	7'-6"	4'-0"	#3	1	9'-9"	#3	12"	3	2'-8"	1'-4"	41.1
4'	#3	12"	13	2'-4"	6'-6"	0'-11"	1'-7"	1'-6"	5'-0"	—	—	—	—	—	—	#3	1	14'-4"	#3	3	13'-6"	#3	12"	1	11'-10"	#3	12"	3	10'-11"	4'-0"	#3	1	12'-2"	#3	12"	4	2'-8"	1'-4"	63.7
5'	#3	12"	15	2'-11"	7'-10"	1'-1"	1'-11"	1'-11"	6'-0"	#3	12"	4	3'-6"	1'-1"	2'-6"	#3	1	16'-8"	#3	3	16'-0"	#3	12"	2	14'-2"	#3	12"	3	10'-11"	4'-0"	#3	1	14'-7"	#3	12"	5	2'-8"	1'-4"	89.5
6'	#4	12"	17	3'-6"	9'-3"	1'-2"	2'-3"	2'-5"	7'-1"	#3	12"	4	4'-6"	1'-4"	3'-3"	#3	1	19'-0"	#3	3	18'-6"	#3	12"	2	16'-6"	#3	12"	4	14'-4"	4'-0"	#3	1	17'-0"	#3	12"	6	2'-8"	1'-4"	145.8
7'	#4	12"	20	3'-9"	10'-9"	1'-3"	2'-9"	2'-7"	8'-1"	#4	12"	7	5'-6"	1'-7"	4'-0"	#4	1	21'-4"	#4	4	21'-0"	#4	12"	2	19'-9"	#4	12"	5	17'-9"	4'-0"	#4	1	19'-5"	#4	12"	7	3'-6"	1'-9"	283.7
8'	#4	12"	22	4'-4"	12'-3"	1'-5"	3'-2"	3'-0"	9'-2"	#4	12"	10	6'-6"	1'-10"	4'-9"	#4	1	23'-8"	#4	4	23'-9"	#4	12"	3	21'-1"	#4	12"	5	17'-9"	4'-0"	#4	1	21'-10"	#4	12"	8	3'-6"	1'-9"	356.4

BAR BENDING DIAGRAMS

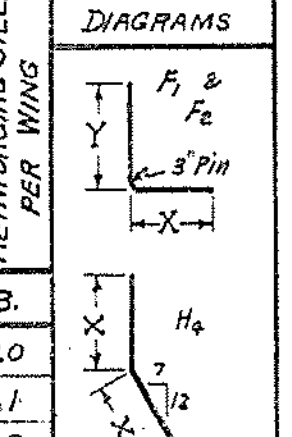

NOTE:- Dimensions are to bar centers.

REVISIONS:- Membrane added. 5-10-66 W.C.H.

Designed By:- W.C.H. 8-20-62. Checked By:- RHS. 1-9-63
Drawn By:- W.C.H. 12-4-62. Checked By:- RHS. 1-31-63
Quantities By:- W.C.H. 12-17-62. Checked By:- RHS. Rechecked By:- RHS. 3-29-63

ARKANSAS STATE HIGHWAY COMMISSION

DETAILS OF STANDARD WINGS FOR REINFORCED CONCRETE BOX CULVERTS

4', 5', 6', 7', 8', 9', 10', 11' & 12' SPANS — 3:1 SLOPES

SINGLES, DOUBLES, TRIPLES, QUADRUPLES & QUINTUPLES. — ALL DEPTHS OF COVER FOR H = 8'-0" OR LESS

STANDARD DRAWING NO. W-X003-1